Agenda

Planning Commission - Regular Meeting
City and Borough of Juneau

May 11, 2021
Virtual Meeting Only
7:00 PM

This virtual meeting will be by video and telephonic participation only. To join the webinar, paste this URL into your browser: https://juneau.zoom.us/j/91520615798. To participate telephonically, call: 1-346-248-7799 or 1-669-900-6833 or 1-253-215-8782 or 1-312-626-6799 or 1-929-436-2866 or 1-301-715-8592 and enter Webinar ID: 915 2061 5798.

I. ROLL CALL

II. REQUEST FOR AGENDA CHANGES AND APPROVAL OF AGENDA

III. APPROVAL OF MINUTES

A. April 13, 2021 Draft Minutes Planning Commission Committee of the Whole - APPROVED WITH MINOR CHANGES

B. April 13, 2021 Draft Minutes Regular Planning Commission - APPROVED WITH MINOR CHANGES

IV. BRIEF REVIEW OF THE RULES FOR PUBLIC PARTICIPATION

V. PUBLIC PARTICIPATION ON NON-AGENDA ITEMS

VI. ITEMS FOR RECONSIDERATION

VII. CONSENT AGENDA

A. SMF2021 0002: Final subdivision approval for the Delta Drive Subdivision, an Alternative Residential Subdivision creating 14 unit lots and 1 parent lot - APPROVED

B. ARF2021 0001: Final subdivision approval for the Delta Drive Subdivision, an Alternative Residential Subdivision creating 14 unit lots and 1 parent lot - APPROVED

VIII. UNFINISHED BUSINESS

IX. REGULAR AGENDA

A. AME2021 0001: Amend zoning from D15 to General Commercial, General Commercial/Light Commercial, or Light Commercial - APPROVED AS AMENDED

X. BOARD OF ADJUSTMENT

A. VAR2021 0001: Variance to D18 lot depth from 80 to 78.2 feet for the purposes of a common wall subdivision - Continued public hearing from April 13, 2021 (Commission may reopen and take more public testimony) - APPROVED AS AMENDED

XI. OTHER BUSINESS

A. Joint Procedural Motion: APL2021 0001, an appeal of Director's determination regarding ENF2021 0015 - Request for Compliance Hearing Date

XII. STAFF REPORTS

XIII. COMMITTEE REPORTS

XIV. LIAISON REPORT

XV. CONTINUATION OF PUBLIC PARTICIPATION ON NON-AGENDA ITEMS

XVI. PLANNING COMMISSION COMMENTS AND QUESTIONS

XVII. EXECUTIVE SESSION

XVIII. SUPPLEMENTAL MATERIALS

A. Additional Material for May 11, 2021 Planning Commission

XIX. ADJOURNMENT

PLANNING COMMISSION AGENDA
THE CITY AND BOROUGH OF JUNEAU, ALASKA

April 13, 2021 Draft Minutes Planning Commission Committee of the Whole - APPROVED WITH MINOR CHANGES

ATTACHMENTS:

	Description	Upload Date	Type
	April 13, 2021 Draft Minutes Planning Commission Committee of the Whole	4/27/2021	Minutes

Minutes
Planning Commission
Committee of the Whole
CITY AND BOROUGH OF JUNEAU
Michael LeVine, Chairman
April 13, 2021

I. ROLL CALL

Michael LeVine, Chairman, called the Regular Meeting of the City and Borough of Juneau (CBJ) Planning Commission (PC), held in the Assembly Chambers of the Municipal Building, to order at 6:03 p.m.

Commissioners present: All Commissioners present via video conferencing – Michael LeVine, Chairman; Nathaniel Dye, Vice Chairman; Paul Voelckers, Clerk; Travis Arndt, Deputy Clerk; Ken Alper; Dan Hickok; Josh Winchell; Erik Pedersen; Mandy Cole

Commissioners absent: None

Staff present: Jill Maclean, CDD Director; Alexandra Pierce, Planning Manager; Irene Gallion, Senior Planner

Assembly members: Loren Jones

II. REGULAR AGENDA

A. Rules of Order

Mr. Voelckers gave a brief synopsis of the process of the review and revision of Rules of Order by the governance committee and presented proposed changes. The significant proposed rules changes include:

- Rule 2-A Date and Time of Regular Meetings –
  - Possibly changing the start time of the meetings from 7:00 p.m. to 6:00 p.m.
    - It was mentioned that if the meetings start an hour earlier, the ending time would also be an hour earlier.
    - Commissioners Alper, Voelckers and Arndt all commented a preference for the 7:00 p.m. start time.
    - It was decided to leave the start time a 7:00 p.m.
- Rule 5 Order of Business
  - Removal of Item XV. *Continuation of Public Participation on Non-Agenda Items*.
    - Attorney Layne suggested keeping it in order to give the public a chance to be heard in case they miss the beginning of the meeting.

        - It was decided to keep Item XV on the agenda.
- Rule 6-C Standing Committees
    - Eliminated the Subdivision Review Committee
    - Added CIP Committee
- Rule 8-A Speaking on the Question
    - Added the phrase "*The Chair may disallow non-germane questions and comments.*"
- Rule 9-F
    - Added the phrase "*Except in accordance with Rule 17," telephonic* participation by an applicant or member of the public is not permitted.
        - Ms. Cole expressed concern with this rule considering the Commission has shown it can successfully conduct business via zoom and telephone and also stated there could be equity issues for people with access or mobility issues.
        - Mr. LeVine suggested taking this topic at a later meeting.
        - Mr. LeVine also noted there are technology complications conducting meetings in both in-person and electronic methods simultaneously.
        - Assembly member Jones explained the Assembly is also working toward a solution to this issue.
- Rule 10-A-1 Subject Matter
    - Added the phrase "*Questions posed to Commissioners or staff will not be answered directly during the time allotted for public testimony*"
        - Mr. Voelckers suggested considering changing "answered" to "addressed"
- Mr. LeVine suggested adding to the rules a statement that commissioners are expected to arrive to meetings on time and to include a limit on how late one can be before they should not be able to participate.

B. Presentation by Southeast Alaska Watershed Coalition: Stormwater BMP

John Hudson, Southeast Alaska Watershed Coalition Restoration Biologist, gave a presentation titled *Stormwater Management in the Lower Jordan Creek Watershed*.

Mr. Hudson explained Jordan Creek is one of five impaired water bodies in Juneau due to sediments and other pollutants and to urban encroachment. The Coalition is working with CBJ and private entities to mitigate or correct the damage where possible. A goal of the Coalition is to continue to work with the CBJ to mitigate and improve impacts to waterways and fish spawning in the area.

III. OTHER BUSINESS – None

IV. REPORT OF REGULAR AND SPECIAL COMMITTEES – None

V. ADJOURNMENT – 6:57p.m.

PLANNING COMMISSION AGENDA
THE CITY AND BOROUGH OF JUNEAU, ALASKA

April 13, 2021 Draft Minutes Regular Planning Commission - APPROVED WITH MINOR CHANGES

ATTACHMENTS:

	Description	Upload Date	Type
🗋	April 13, 2021 Draft Minutes Regular Planning Commission	4/27/2021	Minutes

Minutes
Planning Commission
Regular Meeting
CITY AND BOROUGH OF JUNEAU
Michael LeVine, Chairman
April 13, 2021

I. ROLL CALL

Michael LeVine, Chairman, called the Regular Meeting of the City and Borough of Juneau (CBJ) Planning Commission (PC), held virtually via Zoom Webinar and telephonically, to order at 7:05 p.m.

Commissioners present: All Commissioners present via video conferencing – Michael LeVine, Chairman; Nathaniel Dye, Vice Chairman; Paul Voelckers, Clerk; Travis Arndt, Deputy Clerk; Ken Alper; Dan Hickok; Mandy Cole; Josh Winchell; Erik Pedersen

Commissioners absent: None

Staff present: Jill Maclean, CDD Director; Alexandra Pierce, Planning Manager; Allison Eddins, Planner; Sherri Layne, Law; Teresa Bowen, Law

Assembly members: Loren Jones

II. REQUEST FOR AGENDA CHANGES AND APPROVAL OF AGENDA – None

III. APPROVAL OF MINUTES

A. Draft Minutes March 9, 2021 Planning Commission Regular Meeting

MOTION: *by Mr. Voelckers to approve the Planning Commission Regular Meeting March 9, 2021 minutes.*

The motion passed with no objection.

IV. BRIEF REVIEW OF THE RULES FOR PUBLIC PARTICIPATION – Chairman LeVine briefly explained the rules for public participating via Zoom format

V. PUBLIC PARTICIPATION ON NON-AGENDA ITEMS – None

VI. ITEMS FOR RECONSIDERATION – None

VII. CONSENT AGENDA

SMP2016 0001: An 18-month timeline extension for a previously approved preliminary plat for 24 common wall lots
Applicant: Richard Harris
Location: 7400 Glacier Highway

Staff Recommendation

Staff recommends the Planning Commission adopt the Director's analysis and findings and **APPROVE** an 18-month extension of the Ridgeview Subdivision preliminary plat. This extension allows the applicant to submit for the final plat. This extension expires on October 13, 2023.

MOTION: *by Mr. Dye to accept staff's findings, analysis and recommendations and approve SMP2016 0001.*

The motion passed with no objection.

VIII. UNFINISHED BUSINESS – None

IX. REGULAR AGENDA

USE2021 0002: Conditional Use Permit for the addition of 11 new condo units
Applicant: R&S Construction LLC
Location: 3005 Clinton Drive

Staff Recommendation

Staff recommends the Planning Commission adopt the Director's analysis and findings and APPROVE the requested Conditional Use Permit. The permit would allow the modification of USE2018-0007 for the development of 11 new boat condo units at 3011 Clinton Drive in a Light Commercial zoning district.

The approval is subject to the following conditions:

Condition #1: Prior to the issuance of a building permit, the applicants shall submit a revised site plan that shows the location of trash receptacles.

Condition #2: Prior to the issuance of a temporary certificate of occupancy (TCO) for the first dwelling unit, a homeowners' association agreement shall be submitted to CDD. The agreement shall specify how the HOA will address snow removal and snow storage in common areas.

Condition #3: Prior to the issuance of a temporary certificate of occupancy for the first dwelling unit, the applicant must submit to CDD a homeowners' association agreement that addresses the on-going maintenance of parking spaces, ADA spaces, loading zone and circulation aisles that comply with the requirements of CBJ 49.40.

Condition #4: Prior to the issuance of a building permit, the applicant shall submit a revised site plan that shows one off-street loading zone that complies with the requirements of CBJ 49.40.

Condition #5: The Mendenhall River walking/bike path must remain open to the public at all times during the construction phase for this project.

Condition #6: Prior to the issuance of a temporary certificate of occupancy for the first dwelling unit, a homeowners' association agreement shall be submitted to CDD. The agreement shall address the on-going maintenance of the Mendenhall River walking/bike path on the subject lot. Maintenance includes snow removal from the path may include provisions to work with the Vintage Park Association.

Condition #7: Prior to the issuance of a temporary certificate of occupancy for the first dwelling unit, a 5-foot-wide paved sidewalk must be installed providing safe public access from the Clinton Drive sidewalk to the Mendenhall River walking/bike path, per CBJ 49.35.630. The HOA agreement must address the ongoing maintenance of the sidewalk including snow removal.

Condition #8: Prior to the issuance of a temporary certificate of occupancy for the first dwelling unit, trash receptacles must be bear-proof.

Prior to presentation, Commissioner Dye disclosed he lives near the subject properties but can be fair and impartial and has consulted with Law. Commissioner Hickok disclosed he is an acquaintance with the applicants but can be fair and impartial. Both were allowed to remain.

STAFF PRESENTATION

Planner Eddins presented **USE2021 0002**.

QUESTIONS FOR STAFF

Mr. Arndt asked how the proposed centralized loading zone would work as opposed to residents using their marked parking space for loading by each entrance. Ms. Eddins explained she had applied the code requirements and she would leave it to the commission to decide whether it is an appropriate condition in this case.

Mr. Arndt noted the Vintage Park Business Association is maintaining the trail currently. However, the proposed conditions require for an approximately 60-foot portion of the trail to be maintained by the HOA. He asked whether this would be appropriate and if it would result in disjointed maintenance situations (for example, if one portion would be plowed and the other section not). Ms. Eddins answered that the applicant owns the property in question and it would be inappropriate to require Vintage Park Business Association to maintain property they do not own.

Discussion continued regarding the proposed requirement for a centralized loading zone area in the parking lot. There was concern that the loading zone would reduce overall available parking area but would be used only by those units conducting business within them.

Mr. Winchell asked if there is a way to require for those units with businesses rather than requiring a portion of the shared residential lot to be set aside as a loading zone when not all residents would use it. Ms. Eddins explained the parking requirements as written are not designed for this type of mixed-use development. She added that if a space is marked as a loading zone, then it is required to be left open at all times except when being used for that purpose and setting aside 11 spaces in an 11-unit development would not be feasible. Ms. Maclean added that loading zones in the downtown area are shared among several businesses. Often, there is one loading zone area per block.

Mr. Dye asked why the loading zone is listed as a condition since it is already required by Code. He also asked if the commission has the authority to waive the requirement. Ms. Eddins said she added it as a condition because she did not see it included in the site plan. Ms. Maclean added she believes the loading zone is required unless the commission finds the development to be all residential and not mixed-use with businesses.

Ms. Cole asked if the Vintage Condos were required to put in sidewalk for public access or if it was already there. Ms. Eddins answered there was already a sidewalk. For this development, it needs to be added.

DRAFT

APPLICANT PRESENTATION

Scott Jenkins, 17070 Island View Dr. representing R&S construction spoke to the project. Mr. Jenkins started by stating the development is not "boat condos." These have been permitted as single-family residences with a garage. Some residents may have businesses and some may own boats but these are not boat condos. Mr. Jenkins added this development will be separate from the Vintage Park condos.

Mr. Jenkins explained Condition 3, setting aside a specified loading zone, is not necessary. It is required to be 12 feet wide and 30 feet long and would block out several spots needed for overflow or visitor parking.

Mr. Jenkins added he feels Condition 6 is not an appropriate requirement and should be the responsibility of the State or CBJ maintenance and Condition 7 is also not needed as there are already public points of access.

QUESTIONS FOR APPLICANT

Mr. Winchell asked if there would be a need for snow storage areas. Mr. Jenkins said the snow storage would be in the area of the proposed required loading zone.

Mr. Winchell asked if an owner were to operate a business or warehouse, would a unit loading zone be more appropriate then a centralized spot away from the units. Mr. Jenkins explained every unit comes with 2 parking spaces and every other unit has an overflow/guest space for visitors. He felt loading/unloading should be up to the unit owners in their specified spaces.

Mr. Voelckers asked for the width of the parking spaces. Mr. Jenkins answered from building to building, there is just over or under 70 feet depending on which end of the building. Spaces are 8 ½ feet wide and 18 feet deep. The proposed spaces are wider than normally required.

Mr. Dye asked if there is anything that would preclude a commercial use from operating out of the garage. Mr. Jenkins answered these are residential unit over garages but could be small businesses. Warehousing has never been an issue and the HOA has limits on the kinds of businesses allowed.

Mr. Voelckers asked about the river walk and whether the property is bound by the Vintage Park covenants and asked how residents would get to the river walk without the required sidewalk. Mr. Jenkins answered the parking lot was originally part of their property but was sold as overflow parking for the Rejuvenation building. It was not included in the site plan and Mr. Jenkins felt it would be up to the homeowners to decide how they wanted to access the river by putting in a rock path or using the bike path or some other method that they could choose.

Mr. LeVine asked about the request for bear proof garbage receptacles. Mr. Jenkins said they would abide by that.

PUBLIC COMMENT

Marina Lindsey, Vintage Park condominiums resident, spoke to say she is on the committee to address issues with the river path and said there has been no snow maintenance on the paths. Ms. Lindsey said she supports a bike path and she strongly supports requiring bear proof garbage containers as there has been a bear problem in the area. She mentioned the estimate her HOA had received to upgrade their existing garbage cans to bear proof ones was about $5,000.

ADDITIONAL APPLICANT COMMENTS

Mr. Jenkins commented the bear proofing alone was not $5,000 and added the residents had made other requests that had caused the price to increase. He agreed with Ms. Lindsey that snow removal was a problem.

COMMISSIONER QUESTIONS

Mr. Voelckers asked if there is an opportunity for access on the western side and how the residents of the project would access the sidewalk. Mr. Jenkins said he would totally support a designated spot at that end of the project for the HOA to use.

Mr. Dye followed up asking if there would be a concern if a condition required them to provide access over a DOT right of way to the bike path. Mr. Jenkins did not think that would be a problem.

Mr. Dye asked if there would be any concern or issue with people who are not residents walking through the parking lot to reach Clinton Drive. Mr. Jenkins felt the small amount of traffic that comes through the project area would not be a problem at all.

COMMISSIONER QUESTIONS FOR STAFF

Mr. Arndt asked about possibly locating the sidewalk on the other side, and if the requirements would change. Ms. Eddins replied that the reason staff was proposing a 5-foot-wide sidewalk was to provide a safe route to the existing path rather than having pedestrians crossing a parking lot designed to accommodate boats and large vehicles.

Mr. Dye asked if it would be appropriate to amend Condition 6 to add a phrase at the end to read “may include provisions to work with the Vintage Park association” to allow for the maintenance to be shared. Ms. Eddins thought that was an acceptable amendment to the Condition.

Mr. Dye asked if the condition was only for the portion of the path on the project site. Ms. Eddins said that is correct.

Ms. Maclean added if the amendment was made then it should also state that if there is an agreement with the homeowners' association, then CDD will be provided documentation of the agreement stating who will be responsible for maintaining the path.

Mr. Voelckers asked regarding Condition 7 if it MUST be a sidewalk or if it could be more general so they developer could install a sidewalk, pathway, or bike path and could use some other material for that. Ms. Eddins said it could be more general so long as what is installed is clearly differentiated from the parking lot pavement and clear to pedestrians that it is available for public use.

MOTION: *by Mr. Dye to accept staff's findings, analysis and recommendations and approve USE2021 0002 amending Condition 6 and adding Condition 8.*

MOTION: *by Mr. Winchell to amend the original motion changing Condition 4 to remove requirement for one designated loading space and require homeowners to provide specific loading spaces.*

Mr. Dye spoke in objection to Mr. Winchell's motion to amend stating they had not heard testimony stating the development would not have any commercial use so they could not consider it for solely residential uses. He felt the Code requires the loading zone in this case.

Mr. Winchell spoke to Mr. Dye's objection saying the applicant had said these would be primarily residential. There is a small likelihood they will be used for businesses. While there *could* be businesses there, these are primarily for residential uses.

Mr. Arndt spoke in support of Mr. Winchell's amendment saying the HOA should include the requirement in their documents.

Mr. Voelckers is opposed to changing Condition 4 saying he has concerns of unintended consequences of having too many dedicated loading zones encroaching on the number of available parking spaces.

Mr. LeVine said given the tendency for commercial uses, he does not see how this would not be considered mixed-use and because of that, he does not support the amendment.

Roll Call Vote to amend the original motion:
YES: *Winchell, Hickok, Arndt*
NO: *Voelckers, Alper, Pederson, Cole, Dye, LeVine*
The motion to amend failed with 3 YES and 6 NO Votes

Roll Call Vote on the original motion:
YES: *Hickok, Pederson, Cole, Arndt, Alper, Winchell, Voelckers, Dye, LeVine*
NO: *--*
The original motion passed with no objection.

AT EASE 8:46 p.m. – 9:00 p.m.

X. BOARD OF ADJUSTMENT

VAR2021 0001: Variance to D18 lot depth from 80 to 78.2 feet for the purposes of a common wall subdivision
Applicant: Natalia Golovatiuk
Location: Peters Lane

Staff Recommendation

Staff recommends that the Board of Adjustment adopt the Director's analysis and findings and DENY requested non-administrative variance.

STAFF PRESENTATION
Ms. Pierce presented **VAR2021 0001**.

QUESTIONS FOR STAFF
Mr. Voelckers asked Ms. Pierce to elaborate on the mistake by CBJ. Ms. Pierce answered the lot depth was noted in the pre-application report but the concern with the lot depth was not raised so the applicant went forward thinking they would be able to subdivide.

Mr. Pedersen noted the applicant had received a nonconforming certification. He also asked if subdivision would be considered development. Ms. Pierce said it would. Mr. Pedersen cited, 'the owner of a nonconforming lot has the rights of a conforming lot'. So why would they even need the variance. Ms. Maclean explained the nonconforming certification applies to the lot 'as it exists'. By subdividing, they create different lots and lose the nonconforming allowance.

Mr. Dye asked if the nonconforming situation was created because it was platted prior to the current zoning standards. Ms. Pierce confirmed that is correct. Mr. Dye asked if this property was platted simultaneously with the other surrounding lots. Ms. Pierce said it was platted in conjunction with the adjoining uplands parcels but she did not know when the waterside parcels were platted.

Mr. Alper asked if the CBJ was taking any responsibility for the mistake after they had made a mistake. Ms. Pierce reiterated financial hardship is not an allowable reason for a variance. Additionally, the lot can be developed similarly without subdividing.

Ms. Maclean noted that while the lot depth requirements may not have been specifically discussed at the preliminary meeting, it was stated in the paperwork provided to the applicant.

APPLICANT PRESENTATION
Natalia Golovatiuk spoke explaining she came to own the lot in May 2020 and met with CDD to apply for subdivision of the lot. She went through several steps toward the subdivision before being notified that the subdivision would not be allowed.

QUESTIONS FOR APPLICANT

Mr. Winchell asked if the primary factor was the outlay cost of bringing sewer service to the lot. Ms. Golovatiuk said price was a factor stating without subdivision, it would not be cost effective to develop. She added prior owners have sold the property for that reason.

Mr. Winchell asked what cost outlays the applicant has incurred already. Ms. Golovatiuk said she has spent over $20,000 on surveying, civil engineer and architect fees so far. If she had been given the full information at the original meeting, she would have pursued a triplex from the outset but now it is cost prohibitive to change course by starting over and changing to a triplex.

Mr. Pedersen asked at what point in the process did CBJ CDD inform her the request was not allowable. Ms. Golovatiuk said the pre-application conference was in July and the notification of noncompliance was December.

PUBLIC COMMENT

Julie Costello, 2812 Peters Lane, expressed she has concerns regarding how it will be monitored if the site prep is allowed to continue. There are concerns with drainage of the property damaging surrounding properties.

Mr. Dye asked if Ms. Costello had any problem with the lot being developed besides the drainage concerns. She agreed the drainage is her main concern.

Eric Niewoehner, also lives in the area and expressed concerns with the drainage for any development in the area.

ADDITIONAL APPLICANT COMMENTS

Ms. Golovatiuk spoke to the neighbor comments saying the engineering professionals she has hired would mitigate their concerns.

COMMISSIONER QUESTIONS FOR STAFF

Ms. Maclean spoke to clarify that the pre-application report did state the minimum required lot depth is 80 feet. While it may not have been highlighted during the meeting, it was clearly stated in the report. Ms. Maclean added the CDD does not commonly require nonconforming certification. That requirement usually comes from lending institutions. It is required by CDD only in situations when the applicant applies for a permit directly related to the potential nonconforming situation. When it became clear to CDD that the lot depth did not meet standards, the certification was required. It was not required prior to that because it was not relevant until the lot depth became an issue. She added that the lot is developable up to a triplex as it exists today.

Mr. Dye asked if the applicant had applied to develop the lot as a duplex or triplex and the lender did not require a nonconforming certification, then would CDD have required it.

Ms. Pierce said if the lot had been developed as a duplex or triplex and the lender had not

required the nonconforming certification, then it would have not been required by CDD. The requirement came about due to the subdivision request.

MOTION: ~~*by Mr. Pedersen to recommend that staff not require a variance as part of the proposed subdivision application process. Non-conforming certificate* **NCC2021 0017** *allows the existing and proposed non-conforming lot depths per 49.30.260.*~~ *[WITHDRAWN BY Mr. Pedersen]*

Mr. Pedersen spoke to his motion saying the variance is not required because the conditions of the subdivision process were already met by the nonconforming certificate.

Mr. Pedersen withdrew his motion.

MOTION: ~~*by Mr. Pedersen to dismiss* **VAR2021 0001** *on the grounds that it is not necessary and recommend that staff not require a variance as part of the proposed subdivision application process. Non-conforming certificate* **NCC2021 0017** *allows the existing and proposed non-conforming lot depths per 49.30.260.*~~ *[WITHDRAWN BY Mr. Pedersen]*

Ms. Cole said she understands the intention of the motion but she has reservations about dismissing the variance and making a recommendation that it is not needed. She expressed concerns that if the recommendation were then denied, the applicant would end up right back in the same situation.

Mr. Alper said if the motion is approved, the commission will avoid the issue of denying or accepting the variance and will simply dismiss the variance as not needed. However, it is not up to the PC to approve or deny the subdivision, it would go back to CDD and would be up to the CDD Director to approve or deny the subdivision.

Mr. Voelckers asked Ms. Maclean what she has to say to the notion that a variance is not required. Ms. Maclean said she does believe a variance is required. If the motion goes forward, it will come back to the CDD and the decision will be up to the Director and not come back to the Commission.

Mr. Pedersen confirmed Mr. LeVine's understanding that the intent of the motion was that the PC espouse an interpretation that the non-conforming certification satisfies the lot depth obligation.

Mr. Voelckers asked Ms. Maclean for her comment on the notion that a variance is not required.

Ms. Maclean spoke to say that she does believe the variance is required. Ms. Maclean disagreed with Mr. Pedersen's interpretation of the non-conforming certification saying that the nonconforming certification allows a property owner to continue with the property as it was when legally created but does not allow for it to be changed. Subdividing this property would result in a change and the nonconforming certification would no longer be valid. Ms. Maclean reminded the PC of **VAR2020 0002** which was a very similar situation to this one and the PC denied that variance. She added if this is the direction the Commission is heading, they should

maybe consider continuing the hearing to a later date to give time to obtain a legal opinion before this item moves forward.

Mr. Dye spoke against the motion saying when they rewrote the nonconforming code recently, it was not the intent to allow subdivisions in situations like this.

Mr. Arndt reiterated Ms. Maclean's suggestion to continue the discussion to a later meeting.

Mr. Winchell agreed with the opinion that a variance is not necessary.

Mr. Pedersen withdrew his motion.

MOTION: *by Mr. Dye to continue the matter to the meeting on May 25 to allow staff time to provide research and evaluation of the extent nonconforming certification and whether it obviates the need for a variance here.*

Ms. Cole suggested approving this variance and then doing the research to address future requests.

Mr. Alper and Mr. Winchell had concerns with moving the matter out as far as May 25.

Roll Call Vote:
YES: *Dye, Pederson, Arndt, Voelckers, LeVine*
NO: *Winchell, Alper, Hickok, Cole,*
The motion to continue the item to May 25 passed with 5 YES and 4 NO Votes

Adjourned Board of Adjustment and Reconvened as PC at 10:17 p.m.

XI. OTHER BUSINESS

APL2021 0001:	An appeal of Director's determination regarding ENF2021 0015 – consideration whether to hear appeal per CBJ 49.20.110
Applicant:	A & S Rentals
Location:	1506 2nd Street, 1510 2nd Street, 1508 3rd Street

Prior to hearing **APL2021 0001**, Mr. Arndt disclosed the attorneys for the appellant also represent him on other matters. Mr. Voelckers disclosed an attorney for the appellant is a tenant in one of his buildings. Both commissioners felt they could be fair and impartial and were allowed to remain.

Ms. Bowen briefly presented the status of the appeal and the responsibilities of the commission in this matter.

MOTION: *by Mr. Dye to instruct Ms. Bowen to issue an order to require the appeal parties to submit suggested procedures to CDD for the appeal hearing for Mr. LeVine to sign and distribute to both parties.*

The motion passed with no objection.

Prior to presentation of APL2021 0002, Mr. Arndt disclosed he has a conflict as he is the appellant. Mr. Arndt was recused.

APL2021 0002:	An appeal of Director's determination regarding a Stop Work Notice – consideration whether to hear appeal per CBJ 49.20.110
Applicant:	TDLH LLC
Location:	3101 Mendenhall Loop Road

Attorney Bowen, CBJ Law, recommended the PC recuse themselves based on their relationship to the appellant (Mr. Arndt) and refer the issue directly to the assembly.

MOTION: *by Mr. Dye to certify **APL2021 0002** directly to the Assembly without further review, hearing, or recommendation.*

The motion passed with no objection.

XII. STAFF REPORTS – None

XIII. COMMITTEE REPORTS

Mr. Voelckers reported PWFC met and discussed Calhoun and supported the PC recommendation.

XIV. LIAISON REPORTS

Mr. Jones reported Willie Weldon vs Planning Commission and Central Council will be on the Assembly agenda on April 26 and other topics of interest to the assembly and the commission.

XV. CONTINUATION OF PUBLIC PARTICIPATION ON NON-AGENDA ITEMS – None

XVI. PLANNING COMMISSION COMMENTS AND QUESTIONS – None

XVII. EXECUTIVE SESSION – None

XVIII. ADJOURNMENT – 10:31 p.m.

DRAFT

PLANNING COMMISSION AGENDA
THE CITY AND BOROUGH OF JUNEAU, ALASKA

SMF2021 0002: Final subdivision approval for the Delta Drive Subdivision, an Alternative Residential Subdivision creating 14 unit lots and 1 parent lot - APPROVED

AGENDA ITEM:

Case No.: SMF2021 0002
Applicant: Bicknell, Inc.
Location: 4090 Delta Drive
Proposal: Final subdivision approval for the Delta Drive Subdivision, an Alternative Residential Subdivision creating 14 unit lots and 1 parent lot

RECOMMENDATION:

Staff recommends the Planning Commission adopt the Director's analysis and findings and APPROVE the requested final plat. The permit would allow the final plat approval for the Delta Drive Subdivision, an Alternative Residential Subdivision creating 14 unit-lots and 1 parent lot.

ATTACHMENTS:

	Description	Upload Date	Type
	Staff Report for SMF2021 0002, Part 1	4/27/2021	Staff Report
	Staff Report for SMF2021 0002, Part 2	4/27/2021	Staff Report
	Staff Report for SMF2021 0002, Part 3	4/27/2021	Staff Report
	Staff Report for SMF2021 0002, Part 4	4/27/2021	Staff Report
	Notice of Decision for SMF2021 0002	5/19/2021	Notice of Decision

CITY AND BOROUGH OF JUNEAU
ALASKA'S CAPITAL CITY
COMMUNITY DEVELOPMENT

(907) 586-0715
CDD_Admin@juneau.org
www.juneau.org/CDD
155 S. Seward Street • Juneau, AK 99801

DATE: April 27, 2021

TO: Michael LeVine, Chair, Planning Commission

BY: Laurel Christian, Planner II

THROUGH: Jill Maclean, Director, AICP

PROPOSAL: Applicant requests Final plat approval for the Delta Drive Subdivision, an Alternative Residential Subdivision creating 14 unit-lots and 1 parent lot.

STAFF RECOMMENDATION: Approval

KEY CONSIDERATIONS FOR REVIEW:

- The final plat meets the requirements of 49.15.412 for final plats.
- All conditions of preliminary plat approval are met or on-going.
- This approval is subject to ARF20210001.

GENERAL INFORMATION	
Property Owner	Bicknell, Inc.
Applicant	Bicknell, Inc.
Property Address	4090 Delta Drive
Legal Description	Thunder Mountain Park Tract 1A
Parcel Number	5B2401620011
Zoning	D18 Multi-family Residential
Lot Size	79,189 sq. ft.
Water/Sewer	Public
Access	Delta Drive
Existing Land Use	Vacant
Associated Applications	SMP20200004; ARP20200001; ARF20210001

ALTERNATIVE ACTIONS:

1. **Amend:** amend the approval to require conditions.
2. **Deny:** deny the permit and adopt new findings for items 1-3 below that support the denial.
3. **Continue:** to a future meeting date if determined that additional information or analysis is needed to make a decision, or if additional testimony is warranted.

ASSEMBLY ACTION REQUIRED:

Assembly action is not required for this permit.

STANDARD OF REVIEW:

- Quasi-judicial decision
- Requires five (5) affirmative votes for approval
- Code Provisions:
  - 49.15.402
  - 49.15.412
  - 49.80

The Commission shall hear and decide the case per *49.15.400(a) - Purpose and applicability.* *The purpose of this article is to facilitate the subdivision of land to promote the public health, safety, and general welfare of the citizens of the CBJ in accordance with the Comprehensive Plan of the City and Borough of Juneau, Alaska.*

And per 49.15.402(a) *A major subdivision permit is required for subdivisions resulting in 14 or more lots.*

SITE FEATURES AND ZONING

SURROUNDING ZONING AND LAND USES	
North (D18)	Thunder Mountain Mobile Home Park
South (D18)	Vacant
East (D18)	Thunder Mountain Mobile Home Park
West (D18)	Multi-family four-plex

SITE FEATURES	
Anadromous	None
Flood Zone	None
Hazard	None
Hillside	None
Wetlands	None
Parking District	None
Historic District	None
Overlay Districts	None

BACKGROUND INFORMATION

Project Description – The applicant requests a final plat approval for the Delta Drive Subdivision, an Alternative Residential Subdivision (ARS) creating 15 lots. The proposal would create 14 unit-lots for residential uses and one (1) parent-lot containing the perimeter buffer, privately maintained access road, and other common amenities (15 lots total).

Background – The table below summarizes relevant history for the lot and proposed development.

Item	Summary
SMP2020 0004	In January of 2021, the Planning Commission reviewed and approved the preliminary plat for the proposed alternative residential subdivision (Attachment D).
ARP2020 0001	In January of 2021, the Planning Commission reviewed and approved the preliminary alternative residential plan (Attachment E).
ARF2021 0001	The applicant has applied for the Alternative Residential Subdivision Final Plan Review (ARF2021 0001).

ANALYSIS

Compliance with Title 49 – There have been no changes to the final plat that do not comply with Title 49. The following minor revisions were made to the plat:

- The Unit Lots are now labeled as “Unit Lots” on the plat.

- The Unit Lots are now "Unit Lots 1 – 14" and the parent lot is "Lot 15" – this change was made at request of the CBJ Cartographer so that addressing of the Unit Lots will match the legal description of each lot.
- A secondary monument was set at the southeast corner of Unit Lot 7 and the northeast corner of Unit Lot 9.
- Dates for signature lines were revised to reflect recording in 2021.

Preliminary Plat Conditions of Approval -

Condition	Status	Summary
Prior to approval of the final plat, Certification from the CBJ Treasurer is required showing that all real property taxes and special assessments levied against the property for the year of recording have been paid.	☒Met ☐Unmet ☐On-going	See Attachment F
Prior to approval of a final plat, the applicant shall submit a complete set of construction plans for all required improvements to the Community Development Department for review by the Director of Engineering & Public Works for compliance with CBJ 49.35.140.	☒Met ☐Unmet ☐On-going	Construction drawings are included in the application packet (Attachment A). No right-of-way permits are required; the applicant is required to pursue CBJ Building Permits, Grading Permits, and Utility Permits prior to construction of private property.
Prior to approval of the final plat, the developer shall submit a final drainage plan to be approved by CBJ Engineering & Public Works. This drainage plan must be prepared by a State of Alaska licensed engineer in accordance with CBJ 49.35.510.	☒Met ☐Unmet ☐On-going	A drainage and grading plan is included in the application packet (Attachment A). The drainage and grading plan is stamped and signed by a State of Alaska Licensed Engineer.
Prior to approval of the final plat, the applicant shall submit a revised preliminary plat with revisions.	☒Met ☐Unmet ☐On-going	All requested revisions have been made. The revised plat can be found in Attachment A.
Prior to the issuance of the first temporary certificate of occupancy, the master water meter for the development shall be installed by the developer.	☐Met ☐Unmet ☒On-going	
Prior to the issuance of the eleventh (11) temporary certificate of occupancy for the development, access to and within the development shall be paved.	☐Met ☐Unmet ☒On-going	

AGENCY REVIEW

No agency comments were received at time of writing this staff report. The final plat has been endorsed for recording by CBJ Engineering & Public Works and the CBJ GIS Analyst.

PUBLIC COMMENTS

CDD conducted a public comment period between April 7 and April 19. Public notice was mailed to property owners within 500 feet of the subject parcel. A public notice sign was also posted on-site two weeks prior to the scheduled hearing. Staff received one public comment. Public comments submitted at time of writing this staff report can be found in Attachment C.

Name	Summary
Rhonda Ward	Ms. Ward questioned if drainage was addressed as part of the subdivision review and expressed concern for existing flooding along the common property line with the Thunder Mountain Mobile Home Park. The grading and drainage plan in Attachment A shows that drainage will be routed through ditches and underground drains to Delta Drive. The grading plan was reviewed and approved by CBJ Engineering and Public Works during review of the preliminary plat (SMP20200004).

FINDINGS

Final plat approval criteria – Per CBJ 49.15.402(f)(3) the Director makes the following findings:

1. ***Has the applicant complied with any conditions or plat notes as required in the notice of decision approving the preliminary plat?***

   Analysis: No addition analysis needed.

   Finding: Yes. All conditions of preliminary plat approval have been met or are on-going.

2. ***Has the applicant constructed all required improvements or provided a financial guarantee in accordance with CBJ 49.55.010?***

   Analysis: There are no required improvements in the public right-of-way that are required before the final plat approval. A Financial guarantee is not required for work on private property.

   Finding: Not Applicable.

3. ***Does the final plat meet the standards set forth in CBJ 49.15.412 for final plats?***

   Analysis: No additional analysis needed.

   Finding: Yes. The final plat complies with CBJ 49.15.415 Final Plat Standards.

RECOMMENDATION

Staff recommends the Planning Commission adopt the Director's analysis and findings and APPROVE the requested final plat. The permit would allow the final plat approval for the Delta Drive Subdivision, an Alternative Residential Subdivision creating 14 unit-lots and 1 parent lot.

STAFF REPORT ATTACHMENTS

Item	Description
Attachment A	Application Packet
Attachment B	Abutters Notice and Public Notice Sign
Attachment C	Public Comments
Attachment D	SMP20200004 Preliminary Plat Notice of Decision and Staff Report
Attachment E	ARP20200001 Preliminary ARS Plan Notice of Decision and Staff Report
Attachment F	Certificate of Taxes Paid

CITY AND BOROUGH OF JUNEAU
ALASKA'S CAPITAL CITY
COMMUNITY DEVELOPMENT

DEVELOPMENT PERMIT APPLICATION

NOTE: Development Permit Application forms must accompany all other Community Development Department land use applications.

To be completed by Applicant

PROPERTY LOCATION

Physical Address
4090 Delta Drive, Juneau, AK 99801

Legal Description(s) (Subdivision, Survey, Block, Tract, Lot)
Thunder Mountain Park TR 1A

Parcel Number(s)
5B2401620011

☐ This property located in the downtown historic district
☐ This property located in a mapped hazard area, if so, which _____

PROPERTY OWNER

Property Owner	Contact Person
Bicknell, Inc.	David Blommer

Mailing Address	Phone Number(s)
P.O. Box 33517	
E-mail Address: dblommer@bicknellinc.com	907-789-5727

LANDOWNER/ LESSEE CONSENT Required for Planning Permits, not needed on Building/ Engineering Permits

I am (we are) the owner(s)or lessee(s) of the property subject to this application and i (we) consent as follows:

A. This application for a land use or activity review for development on my (our) property is made with my complete understanding and permission.
B. I (we) grant permission for officials and employees of the City and Borough of Juneau to inspect my property as needed for purposes of this application.

X _____ Landowner/Lessee Signature — Date: 3/15/21

X _____ Landowner/Lessee Signature — Date: _____

NOTICE: The City and Borough of Juneau staff may need access to the subject property during regular business hours and will attempt to contact the landowner in addition to the formal consent given above. Further, members of the Planning Commission may visit the property before the scheduled public hearing date.

APPLICANT

Applicant	Contact Person
SAME	SAME

Mailing Address	Phone Number(s)
SAME	
E-mail Address: SAME	

X _____ Applicant's Signature — Date of Application: 3/15/21

DEPARTMENT USE ONLY BELOW THIS LINE

Intake Initials	
JFC	
Case Number	**Date Received**
SMF21-02 / ARF21-01	3/18/21

This form and all documents associated with it are public record once submitted.

INCOMPLETE APPLICATIONS WILL NOT BE ACCEPTED

For assistance filling out this form, contact the Permit Center at 586-0770.

CITY AND BOROUGH OF JUNEAU
ALASKA'S CAPITAL CITY
COMMUNITY DEVELOPMENT

SUBDIVISION AND DEVELOPMENT PLAN APPLICATION

See subdivision hand-outs for more information regarding the permitting process and the materials required for a complete application.

NOTE: Must be accompanied by a DEVELOPMENT PERMIT APPLICATION form.

To be completed by Applicant

PROJECT SUMMARY

An alternative residential subdivision (ARS) of Thunder Mountain Park TR 1A into Delta Drive Subdivision comprised of 14 unit lots and 1 parent lot.

Number of Existing Parcels 1 Total Land Area 1.82 acres Number of Resulting Parcels 15

HAS THE PARCEL BEEN CREATED BY A MINOR SUBDIVISION IN THE PRECEDING 24 MONTHS

(✓) NO SMP 2004 ( ) YES Case Number _____

TYPE OF SUBDIVISION OR PLATTING APPROVAL REQUESTED

MINOR DEVELOPMENT (changing or creating 13 or fewer lots)	MAJOR DEVELOPMENT (changing or creating 14 or more lots)
( ) Preliminary Plat (MIP)	( ) Preliminary Plat (SMP)
( ) Final Plat (MIF)	(•) Final Plat (SMF)
( ) Panhandle Subdivision	( ) Preliminary Development Plan – PUD (PDP)
( ) Accretion Survey	( ) Final Development Plan – PUD (PDF)
( ) Boundary Adjustment	( ) Development Plan – ARS (ARP)
( ) Lot Consolidation (SLC)	( ) Development Plan – ARS (ARF)
( ) Bungalow Lot Subdivision	( ) Bungalow Lot Subdivision
( ) Common Wall/Zero Lot Subdivision	( ) Common Wall/Zero Lot Subdivision
( ) Other _____	( ) Other _____

ALL REQUIRED DOCUMENTS ATTACHED

- [ ] **Pre-application conference notes** SMP 20-04
- [ ] **Narrative including:** SMP 20-04
  - [✓] Legal description(s) of property to be subdivided
  - [✓] Existing structures on the land
  - [✓] Zoning district
  - [✓] Density
  - [✓] Access
  - [✓] Current and proposed use of any structures
  - [✓] Utilities available
  - [✓] Unique characteristics of the land or structure(s)
- [✓] **Preliminary Plat checklist** SMP 20-04

Arf Smf.

----------DEPARTMENT USE ONLY BELOW THIS LINE----------

SUBDIVISION/PLATTING FEES	Fees	Check No.	Receipt	Date
Application Fees	$ ~~1,440~~ 1056			
Public Notice sign ~~Admin. of Guarantee~~	$ 150			
Adjustment	$ 1,140 (ARF) + deposit included			
Total Fee	$ ~~1,290~~ 2,340			

(ARF) 49.85.100(8)(6) $300 + 60 per unit max. 20 units

For assistance filling out this form, contact the Permit Center at 586-0770.

INCOMPLETE APPLICATIONS WILL NOT BE ACCEPTED

Case Number	Date Received
SMF 21-002	3/18/21

CITY AND BOROUGH OF JUNEAU
ALASKA'S CAPITAL CITY
COMMUNITY DEVELOPMENT

ALTERNATIVE RESIDENTIAL SUBDIVISION APPLICATION

See reverse side for more information regarding the permitting process and the materials required for a complete application.

NOTE: Must be accompanied by a DEVELOPMENT PERMIT APPLICATION form.

To be completed by Applicant

PROJECT SUMMARY

An alternative residential subdivision (ARS) of Thunder Mountain Park TR 1A into Delta Drive Subdivision comprised of 14 unit lots and 1 parent lot.

TYPE OF ALTERNATIVE RESIDENTIAL SUBDIVISION APPROVAL REQUESTED

(please see submittal requirements on reverse)

- ☐ Alternative Residential Subdivision (ARP) Preliminary Plan Approval
- ☐ Amendment to Approved (ARP) Preliminary Plan*
- ☑ Alternative Residential Subdivision (ARF) Final Plan Approval (or Extension)
- ☐ Amendment to Approved (ARF) Final Plan*

* Minor amendments will be reviewed by the Director; Major amendments will be reviewed by the Planning Commission.

LEGAL DESCRIPTION(S) OF PROPERTY INVOLVED

Thunder Mountain Park TR 1A

Number of Existing Parcels 1 Total Land Area 1.82 acres Number of Resulting Parcels 15

PROPOSED USE OF LAND AND BUILDING(S)

Zoning District(s) D-18

Right-of-Way Frontage Proposed 58 feet

Number of Dwelling Units Proposed 14 units

Parking Proposed 28 stalls

Percent Open Space 54%

Percent Buffer 10%

Density Proposed 8 units per acre

Density Bonus ◯ YES ◯ NO

ALL REQUIRED MATERIALS ATTACHED

- ☑ **Complete application per CBJ 49.15.940** (preliminary) **or CBJ 49.15.950** (final)
- ☐ **Pre-Application Conference notes**
- ☐ **Narrative including:**
  - ☐ Current use of land or building(s)
  - ☐ Unique characteristics of land or building(s)
  - ☐ How the proposed project conforms to the Comprehensive Plan and CBJ Title 49 How
  - ☐ the proposed project effects public health, safety, and welfare
  - ☐ How the proposed project is in harmony with the surrounding neighborhood
- ☐ **Preliminary development plan** (detailed on page 2)
- ☐ **Density Bonus**
  - ☐ Open Space
  - ☐ Stream Setback
  - ☐ Lower Income Households / Workforce Households
  - ☐ Unusual Enhancements
  - ☐ Public Right-of-Way Access
  - ☐ Shared Use Pathways
  - ☐ 5-Star Plus Energy Efficiency
  - ☐ 6-Star Energy Efficiency
  - ☐ High-efficiency Primary Heating Methods

----------DEPARTMENT USE ONLY BELOW THIS LINE----------

This form and all documents associated with it are public record once submitted.

INCOMPLETE APPLICATIONS WILL NOT BE ACCEPTED

For assistance filling out this form, contact the Permit Center at 586-0770.

Case Number	Date Received
ARF 21-62	

Alternative Residential Subdivision Application Instructions

Alternative Residential Subdivision outlined in CBJ 49.15.900

Each application for an Alternative Residential Subdivision is reviewed by the Planning Commission at a public hearing. The permit procedure is intended to provide the Commission the flexibility necessary to make decisions tailored to individual applications. The Commission may stipulate conditions to mitigate external adverse impacts from the proposed use. If it is determined that these impacts cannot be satisfactorily overcome, the permit shall be denied.

Pre-Application Conference: A pre-application conference is required prior to submitting an application. The applicant will meet with City & Borough of Juneau and Agency staff to discuss the proposed development, the permit procedure, and to determine the application fees. To schedule a pre-application conference, please contact the Permit Center at 586-0770 or via email at Permits@juneau.org.

Application: An application for an Alternative Residential Subdivision will not be accepted by the Community Development Department until it is determined to be complete. The items needed for a complete application are:

1. **Forms:** Completed Alternative Residential Subdivision Application and a Development Permit Application forms.
2. **Fees:** The fee is dependent upon the number of residential structures involved. Any development, work or use done without a permit issued will be subject to double fees. All fees are subject to change.
3. **Project Narrative:** A detailed narrative describing the project.
4. **Plans:** outlined in CBJ 49.15.940(b)(2). (Surveyed Plans Required)
    a. The amount of land for housing, open space, buffer, access, parking, and pedestrian circulation
    b. The number and types of housing units and proposed density
    c. The natural features to be protected and hazards to be avoided
    d. The public, if any, and private services to be provided

Document Format: All materials submitted as part of an application shall be submitted in either of the following formats:

1. Electronic copies;
2. Paper copies 11" X 17" or smaller (larger paper size may be preapproved by the Community Development Department).

Preliminary Plan Approval

Application Review & Hearing Procedure:

Review: The Community Development Department shall determine when the Alternative Residential Subdivision Application is compete and advise the developer. Within 60 days of determining that an application is complete, the Director shall schedule the preliminary plan for a public hearing.

Hearing: All Alternative Residential Subdivision applications must be reviewed by the Planning Commission. The Commission shall review the preliminary plan and approve, approve with conditions, or deny pursuant to 49.15.940.

Public Notice Responsibilities: As part of the Preliminary Plan Approval, proper public notice must be given as outlined in CBJ 49.15.230 which consists of the following:

The Community Development Department will give notice of the pending Planning Commission meeting and its agenda in the local newspaper a minimum of 10-days prior to the meeting. Furthermore, the department will mail abutters notices to all property owners within 500-feet of the project site.

The Applicant will post a sign on the site at least 14 days prior to the meeting. The sign shall be visible from a public right-of-way or where determined appropriate by CDD. Signs may be produced by the Community Development Department for a preparation fee of $50, and a $100 deposit that will be refunded in full if the sign is returned within seven days of the scheduled hearing date. If the sign is returned between eight and 14 days of the scheduled hearing $50 may be refunded. The Applicant may make and erect their own sign. Please speak with the Community Development Department for more information.

Final Plan Approval

After completion of all conditions and Commission approval of the preliminary plan in accordance with the Conditional Use permit procedures, the final plan shall be submitted for review and approval according to the following:

1. An application, fee, and a final plan must be submitted for Commission review.
2. Formation of a homeowners' association, or similar entity, is required, outlined in CBJ 49.15.950(b)(1)-(4).
3. The Commission may approve the final plan if it substantially conforms to the approved preliminary plan and all requirements of this article.

Phased Development: An applicant may develop an Alternative Residential Subdivision in phases, provided:

1. The initial application includes a preliminary development plan sufficient to assess the cumulative effects of the entire Alternative Residential Subdivision on the neighborhood and the environment according to the standards in subsection 49.15.940.
2. Each phase shall be so designed and implemented that, when considered with reference to any previously constructed phases but without reference to any subsequent phases, it meets the design standards applicable to the entire Alternative Residential Subdivision. Construction and completion of open space and common facilities serving each phase in an Alternative Residential Subdivision shall proceed at a rate no slower than that of other structures in the phase. No phase shall be eligible for final plan approval until all components of all preceding phases are substantially complete and homeowners' association documents have been approved.
3. Each phase of an Alternative Residential Subdivision shall be reviewed according to the provisions of this chapter then current. Each phase of an Alternative Residential Subdivision shall maintain design continuity with earlier phases. At no point during a phased development shall the cumulative density exceed that established in the approved preliminary plan.

Amendments

The developer of an Alternative Residential Subdivision may request an amendment to an approved preliminary or final Alternative Residential Subdivision plan. The request shall state the reasons for the amendment and shall be submitted in writing to the director, who shall inform the developer within 15 days whether the request shall be processed as a minor amendment or major amendment.

1. A minor amendment is a change consistent with the conditions of the original plan approval and would result in:
    a. Insignificant change in the outward appearance of the development;
    b. Insignificant impacts on surrounding properties;
    c. Insignificant modification in the location or siting of buildings or open space;
    d. No reduction in the number of parking spaces below that required;
    e. A delay of no more than one year in the construction or completion schedule for the project or, in the case of a phased project, the phase for which the amendment is requested.
2. All other amendments shall be reviewed by the Commission upon payment of a filing fee and in accordance with the requirements of the original plan approval.

INCOMPLETE APPLICATIONS WILL NOT BE ACCEPTED

PDC
PLAN • DESIGN • CONSTRUCT
A Division of RESPEC Company LLC

March 15, 2021

Ms. Laurel Christian
City and Borough of Juneau
Community Development Department
155 South Seward Street
Juneau, AK 99801

Re: PDC Response to: SMP20200004 V1 NOD Plat Review Comments
Case Number SMP20200004 / ARP20200001
Legal Description: THUNDER MOUNTAIN PARK TR 1A Parcel No.:5B2401620011
PDC Project No. 20098JN

Dear Laurel;

The following are responses to the City and Borough of Juneau Planning Commission Notice of Decision comments dated January 25, 2021. We have restated the CBJ review comment with our response below.

1. Prior to approval of the final plat, Certification from the CBJ Treasurer is required showing that all real property taxes and special assessments levied against the property for the year of recording have been paid;

RESPONSE: *This will be complied with by the Applicant.*

2. Prior to approval of a final plat, the applicant shall submit a complete set of construction plans for all required improvements to the Community Development Department for review by the Director of Engineering & Public Works for compliance with CBJ 49.35.140;

RESPONSE: *Final signed construction drawings have previously been submitted for this project.*

3. Prior to approval of the final plat, the developer shall submit a final drainage plan to be approved by CBJ Engineering & Public Works. This drainage plan must be prepared by an Alaskan licensed engineer in accordance with CBJ 49.35.510;

RESPONSE: *Drainage plan was submitted to CBJ for this project with the preliminary plat submittal package. No review comments have been received to date and we assume that the drainage plan has been accepted.*

4. Prior to approval of the final plat, the applicant shall submit a revised preliminary plat

Thunder Mountain Park Tract 1A
Parcel Code No.: 5B2401620011 File No.:SMP2020 0004
PDC Project No. 20098JN
March 15, 2021

Should you have any questions, please contact our office at your convenience.

Sincerely

J. Mark Pusich, PE
Principal Civil/Structural Engineer
PDC

P:\2020\20098JN-Bicknell_Delta\1Corrspnd\Agency_CBJ\21y02m12d_Response NOD_SMP20-04.docx

with the following revisions:

a. Add the following plat note:

   i. ACCESS TO LOTS SHALL BE VIA ACCESS EASEMENTS SHOWN ON THIS PLAT AND IS SUBJECT TO THE REQUIREMENTS IN THE "[private common driveway access, utility, and maintenance agreement – edit title as appropriate]" RECORDED WITH THIS SUBDIVSION.

RESPONSE: *This item has been complied with*

b. Show a five-foot perimeter buffer along the southwest lot line bordering Delta Acres Addition 1 Lot 8.

RESPONSE: *This item has been complied with.*

c. Include bearing labels for:

   i. The eastern lot line of Lot 6

   ii. The lot lines between lots 7 and 8 and 9 and 10

RESPONSE: *This item has been complied with*

d. Per sheet C203, Grading Plan, a drainage easement should be added to the following locations:

   i. Eastern side of the development in the 10-foot perimeter buffer

   ii. Rear of Lot 11;

RESPONSE: *This item has been complied with*

5. Prior to the issuance of the first temporary certificate of occupancy, the master water meter for the development shall be installed by the developer;

RESPONSE: *The Applicant will comply with this request.*

6. Prior to the issuance of the eleventh (11) temporary certificate of occupancy for the development, access to and within the development shall be paved.

RESPONSE: *The Applicant will comply with this request.*

DELTA DRIVE SUBDIVISION CONSTRUCTION IMPROVEMENT PLAN

JUNEAU, ALASKA

SHEET INDEX

SHEET No.	DESCRIPTION
C001	COVER SHEET
C002	GENERAL NOTES, ABBREVIATIONS AND SYMBOLS
C003	SUMMARY TABLES
C004	EXISTING SITE CONDITIONS
C100	TYPICAL SECTIONS
C101	CONSTRUCTION DETAILS
C102	CONSTRUCTION DETAILS
C200	OVERALL SITE PLAN
C201	SITE & UTILITY PLAN
C202	SITE & UTILITY PLAN
C203	GRADING PLAN
C204	WATER METER ENCLOSURE DETAILS
C205	WATER METER ENCLOSURE DETAILS
C206	WATER METER ENCLOSURE DETAILS
C207	WATER METER ENCLOSURE DETAILS
C300	EROSION & SEDIMENT CONTROL PLAN
C301	EROSION & SEDIMENT CONTROL DETAILS

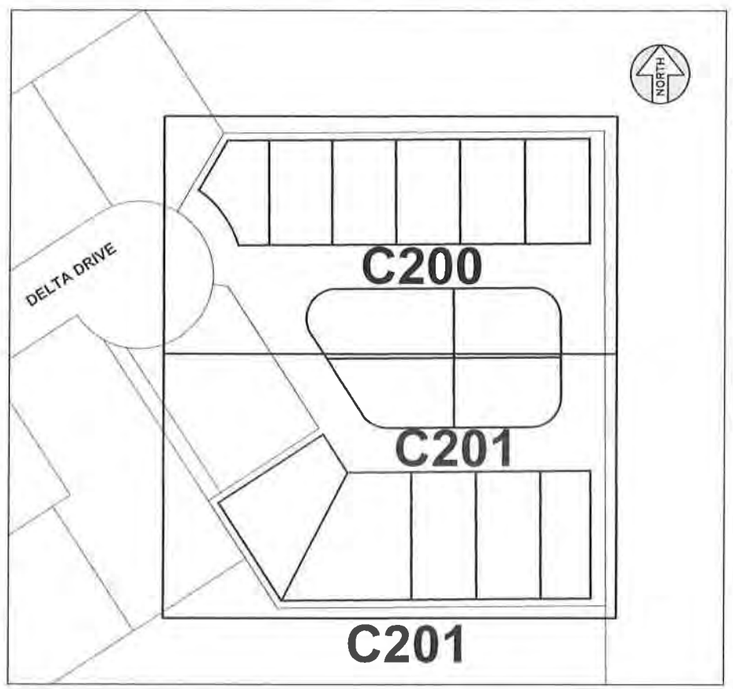

SHEET KEY MAP

N.T.S.

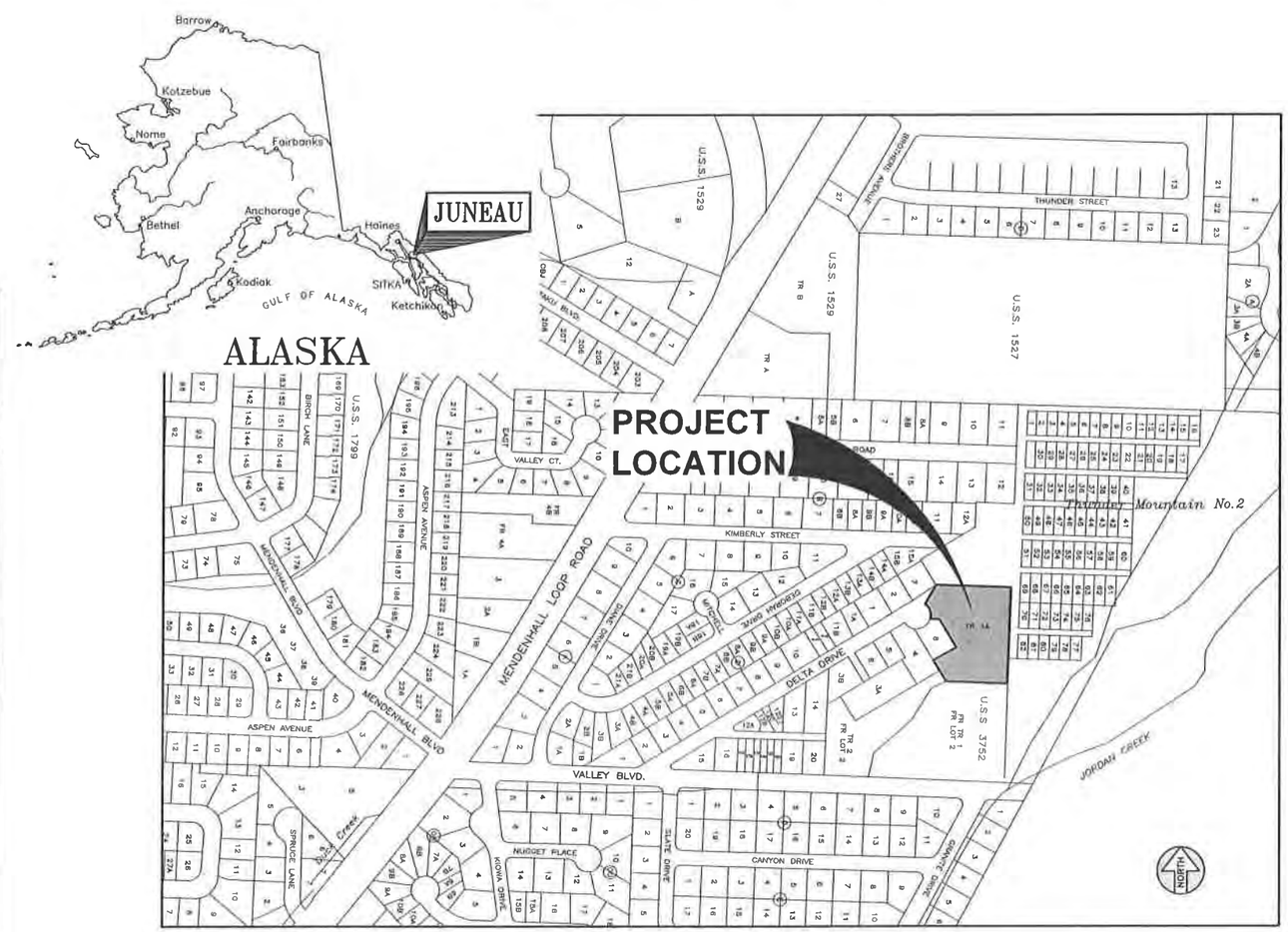

PROJECT LOCATION MAP

500' 0 250' 500' 1000'

SCALE: 1"=500'

DESIGN MSM					
DRAWN MSM					
CHECK JMP					
APPROVED JMP					
FILE:	No.	DATE	REVISION	BY	APRVD.

DELTA DRIVE SUBDIVISION

JUNEAU, AK

BICKNELL INC. QUALITY CONSTRUCTION

STATE OF ALASKA 19TH Joseph M. Parisch CE 8152 REGISTERED PROFESSIONAL ENGINEER 12/03/20

PDC ENGINEERS
PLAN • DESIGN • CONSTRUCT
A BESPEC COMPANY
9109 Mendenhall Mall Rd. Ste. 4, Juneau, AK 99801
907.780.6060 | AECC605

COVER SHEET

DATE: Dec 03, 2020
PDC No. 20098JN

SHEET C001

P:\2020\20098JN-Bicknell_Delta\C\C0001and20098JN.dwg PLOT: December 03, 2020 at: 3:58pm Micki Minsch

GENERAL CONSTRUCTION NOTES

1. CBJ ENGINEERING STANDARD DETAILS BOOK FOR CIVIL ENGINEERING PROJECTS AND SUBDIVISION IMPROVEMENTS DATED AUGUST, 2011 AND CBJ ENGINEERING STANDARD SPECIFICATIONS DATED DECEMBER, 2003 ARE MADE A PART OF THIS CONTRACT, WITH CURRENT REVISIONS AS APPLICABLE.
2. LARGE BOULDERS, HARDPAN, STUMPS, LOGS, ORGANICS AND GROUND WATER MAY BE ENCOUNTERED AT VARIOUS DEPTHS DURING EXCAVATION OPERATIONS. THESE MATERIALS SHALL BE DISPOSED OF AS REQUIRED BY THE ENGINEER.
3. GRADES AND ALIGNMENTS SHOWN ON THESE PLANS ARE SUBJECT TO MINOR REVISIONS AS APPROVED BY THE ENGINEER.
4. LOCATION OF WATER SYSTEM IMPROVEMENTS, SANITARY SEWER MANHOLES, STORM DRAIN STRUCTURES, PIPING AND PIPE LENGTHS ARE SUBJECT TO MINOR REVISIONS AS APPROVED BY THE ENGINEER.
5. LOCATIONS OF EXISTING UNDERGROUND SEWER, WATER, TELEPHONE, CABLE TELEVISION, AND POWER UTILITIES SHOWN ON THESE PLANS WERE DERIVED FROM CBJ AS-BUILTS OR FIELD LOCATES. ACTUAL LOCATIONS MAY VARY FROM THOSE SHOWN. THE CONTRACTOR IS RESPONSIBLE FOR LOCATING, PROTECTING AND MAINTAINING THE UTILITIES THROUGHOUT THE CONSTRUCTION OF THIS PROJECT. ANY DAMAGE RESULTING TO THESE UNDERGROUND UTILITIES DURING CONSTRUCTION SHALL BE PAID FOR BY THE CONTRACTOR AND SHALL BE CONSIDERED INCIDENTAL TO THE CONTRACT. CALL "DIAL BEFORE YOU DIG" @ 586-1333 FOR UNDERGROUND UTILITY LOCATES AND 811 ALASKA DIG LINE FOR ACS AND GCI PRIOR TO ANY EXCAVATION ACTIVITIES.
6. CONTRACTOR SHALL ASSURE GARBAGE PICKUP, DAILY MAIL SERVICE, FUEL AND SERVICE DELIVERIES WILL BE UNINTERRUPTED TO ALL RESIDENTS AFFECTED BY THIS PROJECT.
7. PROPERTY LINE LOCATIONS USED IN THESE PLANS WERE DERIVED FROM RECORD PLATS AND DO NOT REPRESENT A SUBDIVISION BOUNDARY SURVEY.
8. ALL SIGN INSTALLATIONS OR RELOCATIONS SHALL BE PERFORMED ACCORDING TO THE "MANUAL ON UNIFORM TRAFFIC CONTROL DEVICES" (M U.T.C.D.) WITH THE ALASKA SUPPLEMENT
9. ALL ITEMS DESIGNATED TO BE REMOVED SHALL BE DISPOSED OF AT AN APPROVED DISPOSAL SITE, EXCEPT AS NOTED IN THE CONTRACT DOCUMENTS.
10. PROVIDE KNOCKOUTS IN PRECAST STORM DRAIN STRUCTURES FOR ALL PIPES SHOWN ON THE PLANS.
10. ONLY HORIZONTAL ELBOW FITTINGS (BENDS) ARE SHOWN ON THE PLANS. ADDITIONAL FITTINGS WILL BE REQUIRED FOR VERTICAL DEFLECTIONS NEAR CONNECTION TO EXISTING PIPES, AND AT OTHER LOCATIONS REQUIRING GRADE CHANGES TO AVOID CONFLICTS.
11. THE CONTRACTOR SHALL NOT STORE MATERIALS OR EQUIPMENT OR OPERATE EQUIPMENT WITH ITS TRACKS OR WHEELS PLACED ON PRIVATE PROPERTY WITHOUT THE WRITTEN APPROVAL OF THE PROPERTY OWNER.
11. THE CONTRACTOR SHALL NOTIFY CBJ WATER UTILITIES OPERATOR LONI VANKIRK (723-4975) OF PROPOSED WATER SERVICE INTERRUPTION AND SUBMIT THE "WATER SYSTEM SPECIAL USE PERMIT" (COSIGNED BY THE ENGINEER) AT LEAST 48-HOURS PRIOR TO SHUTDOWN OR FLUSHING OF MAINLINE WATER PIPE. NO WATER SERVICE INTERRUPTION MAY PROCEED UNTIL THIS APPROVAL IS OBTAINED
12. CONTRACTOR SHALL REFERENCE ALL EXISTING PROPERTY CORNER MONUMENTS (I.E. BRASS CAP MONUMENTS, REBARS OR CHISELED X'S) PRIOR TO CONSTRUCTION THAT WILL BE DISTURBED DURING HIS WORK, AND REMONUMENT AFTER CONSTRUCTION OPERATIONS. ALL WORK SHALL BE DONE BY, OR UNDER THE DIRECTION OF, AN ALASKA REGISTERED LAND SURVEYOR. ALL EXISTING PROPERTY CORNERS ARE NOT NECESSARILY SHOWN ON THE PLANS.
13. THE PLAN DRAWINGS DO NOT NECESSARILY SHOW ALL TREES AND SHRUBS THAT MAY BE ENCOUNTERED DURING CONSTRUCTION ACTIVITIES. NO TREES, SHRUBS OR LANDSCAPING ARE TO BE REMOVED OR DAMAGED, UNLESS SHOWN ON THE DRAWINGS OR DIRECTED BY THE ENGINEER.
14. "JUMPING JACK", OR SIMILAR TYPE COMPACTORS SHALL BE USED FOR COMPACTION WITHIN 18-INCHES OF THE OUTSIDE SURFACE OF ALL WATER VALVE BOXES, CATCH BASINS AND MANHOLES.
15. THE USE OF GROUT AND QUICKSET CEMENT PRODUCTS WITH ADJUSTING RINGS, BRICKS, WOOD, STONES AND OTHER SIMILAR GRADE ADJUSTMENT DEVICES TO SUPPORT CATCH BASIN FRAMES OVER CATCH BASINS AND MANHOLES WILL NOT BE PERMITTED ON THIS PROJECT. SEE CBJ STANDARD SPECIFICATIONS, SECTION 02502 - STORM SEWER MANHOLES, INLETS AND CATCH BASINS AND THE DRAWINGS FOR CATCH BASIN FRAME SUPPORT REQUIREMENTS. SANITARY SEWER MANHOLES SHALL BE ADJUSTED PER CBJ STANDARD SPECIFICATIONS 02402 - SANITARY SEWER MANHOLES AND CLEANOUTS.
16. THE CONTRACTOR SHALL INSTALL AND MAINTAIN ENGINEER APPROVED EROSION CONTROL DEVICES DURING CONSTRUCTION PER CBJ STANDARD SPECIFICATIONS SECTION 01570 REQUIREMENTS.
17. ALL WORK FOR THESE PLANS SHALL BE CONDUCTED IN STRICT ACCORDANCE WITH APPLICABLE LOCAL, STATE AND FEDERAL LAWS AND STANDARDS.

ABBREVIATIONS

AC	ASBESTOS CEMENT
ACS	ALASKA COMMUNICATIONS SYSTEMS
AEL&P	ALASKA ELECTRIC LIGHT & POWER
APPROX	APPROXIMATE
AST	ABOVEGROUND STORAGE TANK
BC	BACK OF CURB
BLVD	BOULEVARD
BOP	BEGINNING OF PROJECT
CB	CATCH BASIN
CBJ	CITY & BOROUGH OF JUNEAU
CHB	CHORD BEARING
CHL	CHORD LENGTH
C/L	CENTERLINE
CI	CAST IRON
CLR	CLEAR
CMP	CORRUGATED METAL PIPE
CONC	CONCRETE
CONT	CONTINUOUS
CPP	CORRUGATED POLYETHYLENE PIPE
CTE	CONNECT TO EXISTING
DI	DUCTILE IRON
DIP	DUCTILE IRON PIPE
DIA	DIAMETER
E	EASTING
EG	EXISTING GRADE
EL	ELEVATION
EOP	END OF PROJECT
EP	EDGE OF PAVEMENT
EXIST	EXISTING
EXP	EXPANSION
FG	FINISH GRADE
FH	FIRE HYDRANT
FL	FLOW LINE
GCI	GENERAL COMMUNICATION INC.
GV	GATE VALVE
HDPE	HIGH DENSITY POLYETHYLENE
HP	HIGH PRESSURE
IE	INVERT ELEVATION
L	LENGTH
LP	LOW POINT
LT	LEFT
MAX	MAXIMUM
MIN	MINIMUM
MJ	MECHANICAL JOINT
MTE	MATCH TO EXISTING
N	NORTHING
N/A	NOT APPLICABLE
NFS	NON-FROST SUSCEPTIBLE
NTS	NOT TO SCALE
NVC	NO VERTICAL CURVE
OC	ON CENTER
PC	POINT OF CURVATURE
PERF	PERFORATED
PI	POINT OF INTERSECTION
P/L	PROPERTY LINE
POC	POINT ON CURVE
POL	POINT ON LINE
PP	POWER POLE
PT	POINT OF TANGENCY
PVC	POLYVINYL CHLORIDE
R	RADIUS
ROW	RIGHT-OF-WAY
RP	RADIUS POINT
RT	RIGHT
SDMH	STORM DRAIN MANHOLE
SS	SANITARY SEWER
SSCO	SANITARY SEWER CLEANOUT
SSMH	SANITARY SEWER MANHOLE
STA	STATION
STD	STANDARD
SWPPP	STORM WATER POLLUTION PREVENTION PLAN
T	TANGENT
TBG	TOP BACK OF GUTTER
TBM	TEMPORARY BENCH MARK
TC	TOP OF CONCRETE
TOB	TOP OF BANK
TOP	TOP OF PIPE
TYP	TYPICAL
UD	UNDERDRAIN
UON	UNLESS OTHERWISE NOTED
UST	UNDERGROUND STORAGE TANK
VC	VERTICAL CURVE
VERT	VERTICAL
VPI	VERTICAL POINT OF INTERSECTION
W/	WITH

SYMBOLS

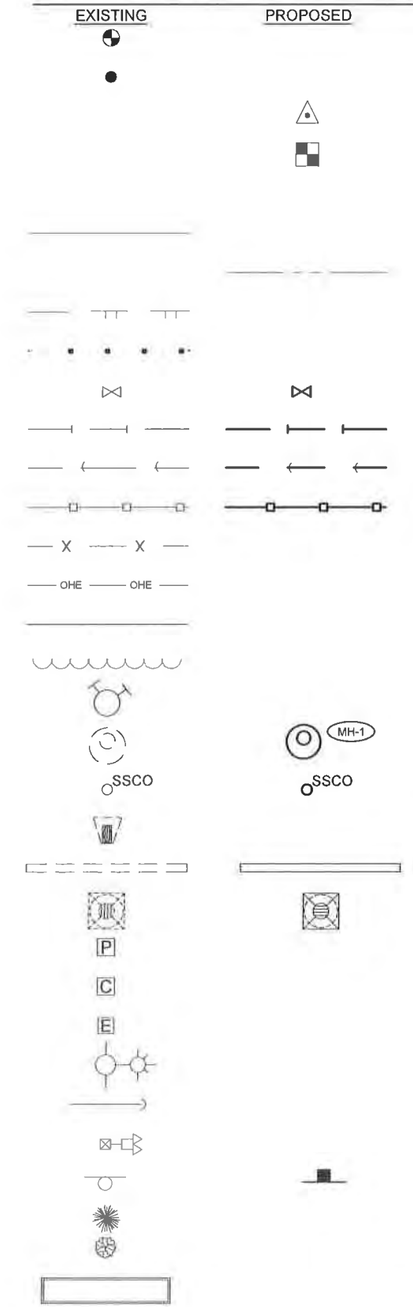

PRIMARY MONUMENT
SECONDARY MONUMENT
SURVEY SPIKE / MAG NAIL
TEMPORARY BENCHMARK
PROPERTY / BOUNDARY LINE
PROPERTY / BOUNDARY LINE UNSURVEYED
PROJECT BASELINE
TOP OF BANK
TOE OF SLOPE
WATER GATE VALVE/CURB STOP
WATER LINE/SERVICE
SEWER LINE/SERVICE
WOODEN FENCE
CHAIN-LINK FENCE
OVERHEAD ELECTRIC LINE
ASPHALT PAVEMENT
TREE LINE
FIRE HYDRANT
SANITARY SEWER MANHOLE
SANITARY SEWER CLEANOUT
CONCRETE HEADWALL W/ TRASH RACK
STORM SEWER PIPE
CATCH BASIN W/ AREA DRAIN
TELEPHONE PEDESTAL
CABLE PEDESTAL
ELECTRICAL PEDESTAL
POWER POLE WITH LIGHT
GUY WIRE
GANG STYLE MAILBOX
STREET SIGN
CONIFEROUS TREE
DECIDUOUS TREE
BUILDING FOUNDATION

DESIGN MSM
DRAWN MSM
CHECK JMP
APPROVED JMP
FILE:

No.	DATE	REVISION	BY	APRVD.

DELTA DRIVE SUBDIVISION

JUNEAU, AK

BICKNELL INC. QUALITY CONSTRUCTION

STATE OF ALASKA 49TH Joseph M. Pusich CE 8152 REGISTERED PROFESSIONAL ENGINEER 12/03/20

PDC ENGINEERS
PLAN • DESIGN • CONSTRUCT
A BESPEC COMPANY
9109 Mendenhall Mall Rd. Ste. 4, Juneau, AK 99801
907.780.6060 | AECC605

GENERAL NOTES, ABBREVIATIONS AND SYMBOLS

DATE: Dec 03, 2020
PDC No. 20098JN

SHEET C002

P:\2020\20098JN-Biennett_Delta\C\C002\dwg\20098JN.dwg PLOT: December 03, 2020 at: 3:56pm Micki Minich

WATER SERVICE SUMMARY

LOT No.	STATION & OFFSET	SIZE/TYPE	REMARKS
2	10+95.1, 13.5' LT	1" POLY	SEE NOTE 1
3	11+28.9, 13.5' LT	1" POLY	SEE NOTE 1
4	11+81.8, 13.5' LT	1" POLY	SEE NOTE 1
5	12+15.3, 13.5' LT	1" POLY	SEE NOTE 1
6	12+58.8, 21.4' LT	1" POLY	SEE NOTE 1
7	11+68.0, 13.4' RT	1" POLY	NEW SERVICE
8	12+28.0, 13.5' RT	1" POLY	NEW SERVICE
9	14+71.4, 13.4' RT	1" POLY	NEW SERVICE
10	14+11.4, 13.3' RT	1" POLY	NEW SERVICE
11	15+22.0, 18.1' LT	1" POLY	SEE NOTE 1
12	14+96.0, 13.5' LT	1" POLY	SEE NOTE 1
13	14+62.5, 13.5' LT	1" POLY	SEE NOTE 1
14	14+09.2, 13.5' LT	1" POLY	SEE NOTE 1
15	13+85.5, 21.6' LT	1" POLY	SEE NOTE 1

NOTES:

1. EXISTING FOUNDATION PADS REPORTED TO HAVE 3/4" POLY WATER SERVICES TO EACH UNIT. EXISTING WATER SERVICES MAY BE REUSED IF FOUND TO BE IN SATISFACTORY CONDITION. FLUSHING, DISINFECTION AND PRESSURE TESTING SHALL BE PERFORMED ON THE EXISTING 3/4" POLY WATER SERVICES.

STORM DRAIN STRUCTURE FRAME & GRATE SUMMARY

STRUCTURE No.	EAST JORDAN, OLYMPIC FOUNDRY Co., CBJ STANDARD No., OR APPROVED EQUAL
S-1	OLYMPIC FOUNDARY MH34SC

SEWER SERVICE SUMMARY

LOT No.	STATION & OFFSET	SIZE/TYPE	REMARKS
2	10+82.7, 14.0' LT	4" PVC	SEE NOTE 1
3	11+16.6, 14.0' LT	4" PVC	SEE NOTE 1
4	11+71.4, 14.0' LT	4" PVC	SEE NOTE 1
5	12+02.3, 14.0' LT	4" PVC	SEE NOTE 1
6	12+52.1, 14.0' LT	4" PVC	SEE NOTE 1
7	11+38.0, 14.5' RT	4" PVC	NEW SERVICE
8	11+98.0, 14.5' RT	4" PVC	NEW SERVICE
9	15+01.5, 14.5' RT	4" PVC	NEW SERVICE
10	14+41.4, 14.5' RT	4" PVC	NEW SERVICE
11	15+27.7, 14.0' LT	4" PVC	SEE NOTE 1
12	15+07.9, 14.0' LT	4" PVC	SEE NOTE 1
13	14+77.6, 14.0' LT	4" PVC	SEE NOTE 1
14	14+22.8, 14.0' LT	4" PVC	SEE NOTE 1
15	13+92.1, 14.0' LT	4" PVC	SEE NOTE 1

NOTES:

1. SEWER SERVICE LOCATIONS SHOWN ARE FROM LIMITED AS-BUILT INFORMATION AND WERE NOT FIELD LOCATED. EXISITNG 4" PVC SEWER SERVICES EXIST FOR LOTS 2-6 AND LOTS 11-15. CONTRACTOR SHALL FIELD LOCATE ALL SEWER SERVICES TO CONFIRM FINAL LOCATION FOR NEW SEWER SERVICE CLEANOUT INSTALLATION. STATION & OFFSET ARE GIVEN TO THE CENTER OF THE NEW CLEANOUT LID. IF EXISTING SANITARY SEWER SERVICES FOUND TO BE IN GOOD CONDITION CONTRACTOR MAY KEEP THEM IN SERVICE.
2. CONSTRUCT NEW 4" PVC SEWER SERVICE AND INSTALL NEW CLEANOUT NEAR PROPERTY LINE PER CBJ STANDARD DETAIL 213 AND CONNECT TO EXISTING SEWER SERVICE.
3. ADJUST SEWER SERVICE SLOPE TO PROVIDE MAXIMUM SEPARATION BETWEEN UTILITY CROSSINGS. INSTALL SWEEPS AS REQUIRED UPON APPROVAL OF THE ENGINEER.

P:\2020\20098JN-Bicknell_Delta\C\C003zmsl\20098JN.dwg PLOT: December 03, 2020 at: 3:58pm Micki Minsch

DESIGN MSM
DRAWN MSM
CHECK JMP
APPROVED JMP
FILE

No.	DATE	REVISION	BY	APRVD.

DELTA DRIVE SUBDIVISION

JUNEAU, AK

BICKNELL INC. QUALITY CONSTRUCTION

STATE OF ALASKA 49TH Joseph M. Pusich CE 8152 REGISTERED PROFESSIONAL ENGINEER 12/03/20

PDC ENGINEERS
PLAN • DESIGN • CONSTRUCT
A BESPEC COMPANY
9109 Mendenhall Mall Rd. Ste. 4, Juneau, AK 99801
907.780.6060 | AECC605

SUMMARY TABLES

DATE: Dec 03, 2020
PDC No. 20098JN

SHEET C003

SURVEY NOTES

1. THE PURPOSE OF THIS SURVEY IS TO PROVIDE A TOPOGRAPHIC DESIGN SURVEY OF THE DELTA DRIVE DEVELOPMENT
2. THE FIELD SURVEYS WERE PERFORMED ON MAY 26-27, 2020.
3. THE SURVEY EQUIPMENT UTILIZED DURING THIS SURVEY WAS TRIMBLE R8-2 GNSS ROVER AND BASE AND A TRIMBLE S-7 ROBOTIC TOTAL STATION UTILIZING STANDARD LASER MEASURING TECHNIQUES.
4. ALL DISTANCES AND DIMENSIONS ARE IN U S. SURVEY FEET AND REDUCED TO THEIR HORIZONTAL VALUES.
5. CONTROL AND MONUMENT COORDINATES ARE IN AN ASSUMED LOCAL COORDINATE SYSTEM.
6. ELEVATIONS ARE IN AN ASSUMED LOCAL VERTICAL DATUM.
7. CONTOURS ARE SHOWN AT 1-FOOT INTERVALS.
8. ALL UTILITIES WERE LOCATED BY PDC AND ARE BASED ON OBSERVABLE EVIDENCE AND ABOVE GROUND APPURTENANCES AND FIELD RETRACEMENT PERFORMED BY PDC.
9. THIS SURVEY DOES NOT CONSTITUTE A SUBDIVISION AS PER ALASKA STATUTE 40.15.900(5)(a).

EXIST. SSCO	(CO1)
STA 10+04.9,	33.3 LT
EXIST. LID EL=	97.31
SW 8" (OUT) IE=	94.81

EXIST. SSMH	(M1)
STA 08+90.8,	25.9 RT
EXIST. LID EL=	98.50
E 6" (IN) IE=	92.94
NW 8" (OUT) IE=	92.84

NOTES:
1. ROADWAY AND UTILITY INFORMATION SHOWN ON DELTA DRIVE IS PROPOSED FROM CBJ CONTRACT BE21-028 "DELTA DRIVE RECONSTRUCTION." WORK IS SCHEDULED FOR SPRING/SUMMER 2021.
2. EXISTING 6" PVC SEWER MAIN AND 2" POLY PIPE FOR DOMESTIC WATER EXIST ON SITE.

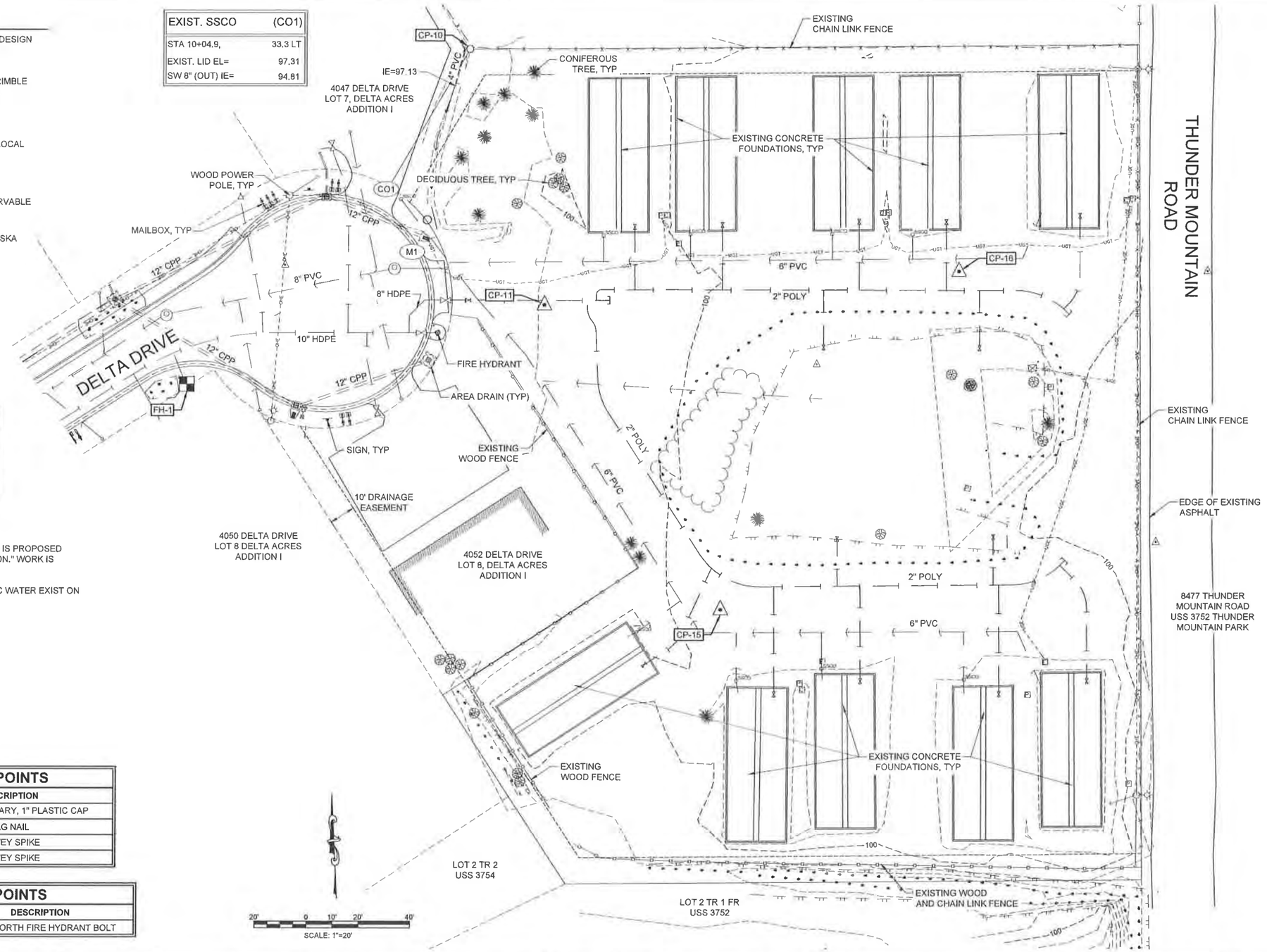

TABLE OF HORIZONTAL CONTROL POINTS

POINT #	NORTHING	EASTING	DESCRIPTION
CP 10	10112.63	10356.34	S-3650, SECONDARY, 1" PLASTIC CAP
CP 11	10014.23	10385.34	MAG NAIL
CP 15	9896.49	10453.74	SURVEY SPIKE
CP 16	10027.18	10545.16	SURVEY SPIKE

TABLE OF VERTICAL CONTROL POINTS

POINT #	NORTHING	EASTING	ELEVATION	DESCRIPTION
FH-1	9983.52	10247.42	100.44'	"X" ON NORTH FIRE HYDRANT BOLT

P:\2020\20098JN-Bicknell_Delta\C\20098JN-Bicknell_Delta C-20098JN.dwg PLOT: December 03, 2020 at: 3:56pm Mark.Minsch

DESIGN MSM
DRAWN MSM
CHECK JMP
APPROVED JMP
FILE:

No.	DATE	REVISION	BY	APRVD.

DELTA DRIVE SUBDIVISION

JUNEAU, AK

BICKNELL INC. QUALITY CONSTRUCTION

STATE OF ALASKA 49TH Joseph M. Pusich CE 8152 REGISTERED PROFESSIONAL ENGINEER 12/03/20

PDC ENGINEERS
PLAN • DESIGN • CONSTRUCT
A NESPEC COMPANY
9109 Mendenhall Mall Rd. Ste. 4, Juneau, AK 99801
907.780.6060 | AECC605

EXISTING SITE CONDITIONS

DATE: Dec 03, 2020
PDC No. 20098JN

SHEET C004

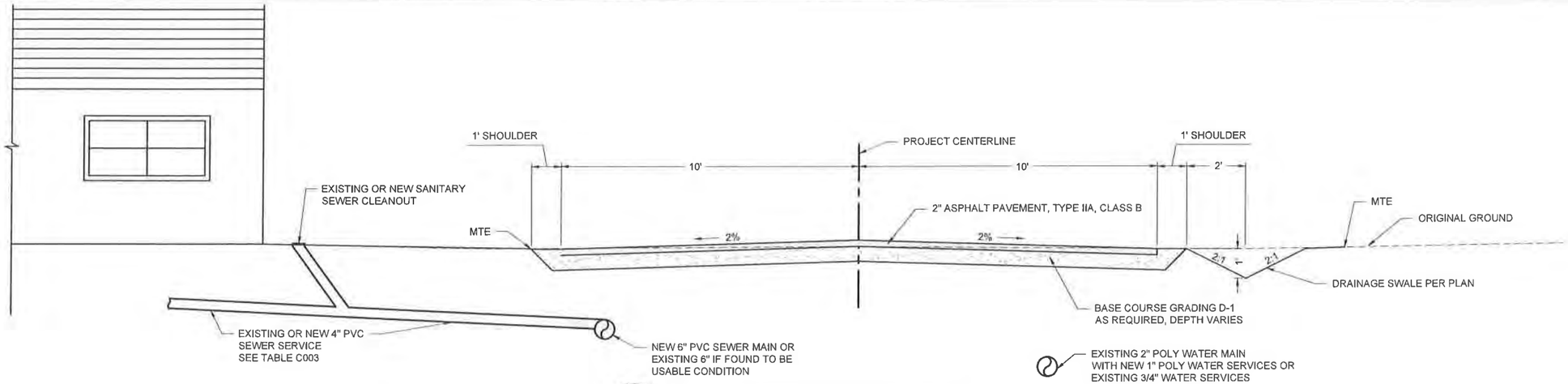

1 / 100 **ROADWAY TYPICAL SECTION**
SCALE: NTS

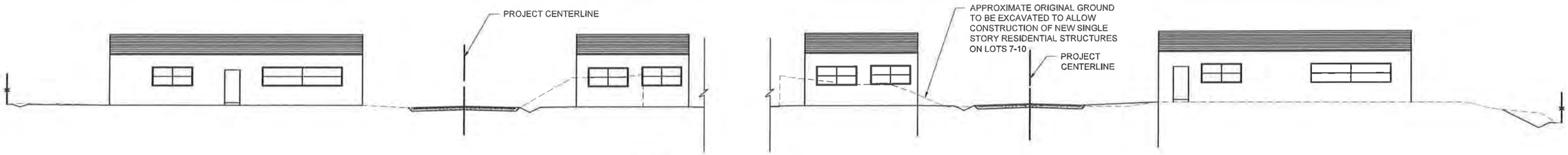

2 / C100 **SITE TYPICAL SECTION**
SCALE: NTS

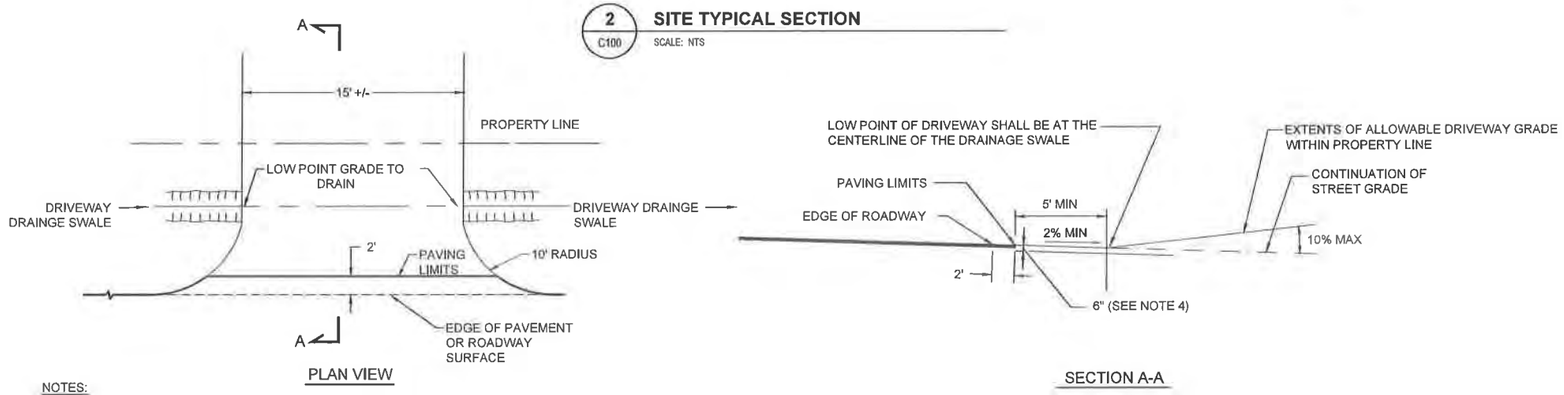

NOTES:

1. PAVING LIMIT FOR DRIVEWAYS SHALL BE 2' FROM THE EDGE OF ROADWAY OR AS APPROVED BY THE ENGINEER.
2. DRIVEWAY SWALE SHALL BE GRADED TO DRAIN INTO DRAINAGE SWALE

3 / C100 **TYPICAL DRIVEWAY SWALE DETAIL**
SCALE: NTS

SHEET C100 NOTES:

1. EXISTING 2" POLY WATER LINE WILL BE FLUSHED, DISINFECTED AND PRESSURE TESTED IN ACCORDANCE WITH CBJ STANDARD SPECIFICATIONS TO ENSURE COMPLIANCE WITH PUBLIC DRINKING WATER REGULATIONS.

P:\2020\20098JN-Bicknell_Delta\CC\20098JN.dwg PLOT: December 03, 2020 at 3:59pm MSM-Mirach

DESIGN	MSM
DRAWN	MSM
CHECK	JMP
APPROVED	JMP
FILE:	

No.	DATE	REVISION	BY	APRVD.

DELTA DRIVE SUBDIVISION

JUNEAU, AK

BICKNELL INC. QUALITY CONSTRUCTION

STATE OF ALASKA 49TH Joseph M. Punich CE 8152 REGISTERED PROFESSIONAL ENGINEER 12/03/20

PDC ENGINEERS
PLAN • DESIGN • CONSTRUCT
A RESPEC COMPANY
9109 Mendenhall Mall Rd. Ste. 4, Juneau, AK 99801
907.780.6060 | AECC605

TYPICAL SECTIONS

DATE: Dec 03, 2020
PDC No. 20098JN

SHEET C100

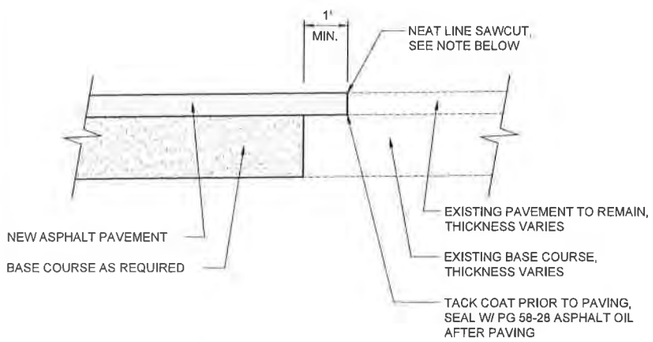

NOTE:
SAWCUT OF EXISTING PAVEMENT SHALL NOT BE MADE UNTIL 24 HOURS PRIOR TO FINAL PAVING.

1 C101 **PAVEMENT MATCH DETAIL**
SCALE: NTS

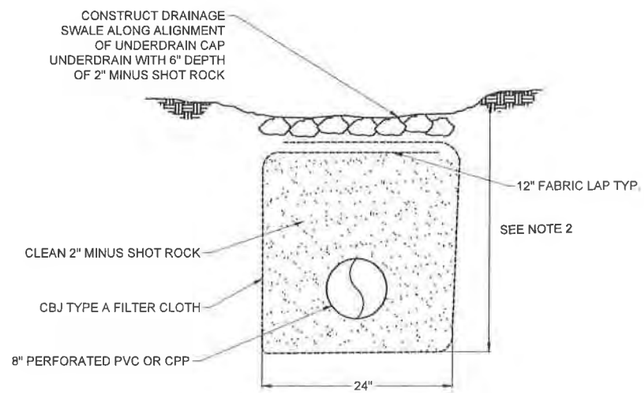

NOTES:
1. OUTFALL CONNECTIONS TO DAYLIGHT NEAR CULVERT INLETS PER PLAN.
2. DEPTH OF UNDERDRAIN VARIES, MIN SLOPE=0.50%

2 C101 **8" UNDERDRAIN DETAIL**
SCALE: NTS

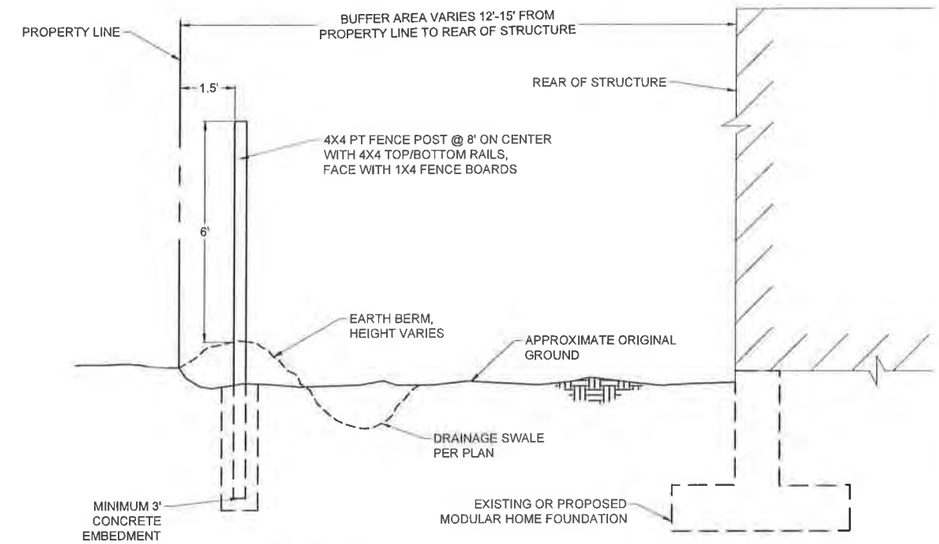

3 C101 **TYPICAL FENCE AT REAR OF DWELLING**
SCALE: 1"=2'

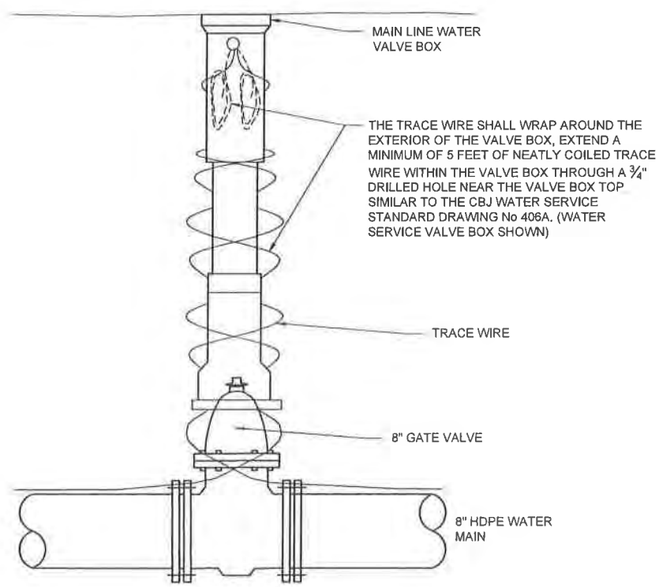

4 C101 **MAIN LINE VALVE TRACE WIRE TERMINATION DETAIL**
SCALE: NTS

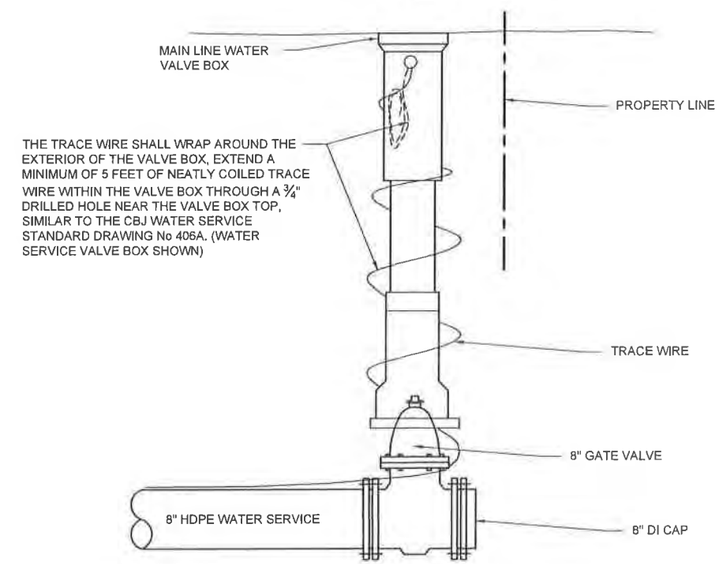

5 C101 **WATER SERVICE VALVE TRACE WIRE TERMINATION DETAIL**
SCALE: NTS

P:\2020\20098JN\Bisnet_Delta\C-C3001mod20098JN.dwg PLOT: December 03, 2020 at: 3:59pm Misti Mirach

DESIGN MSM
DRAWN MSM
CHECK JMP
APPROVED JMP
FILE:

No.	DATE	REVISION	BY	APRVD.

DELTA DRIVE SUBDIVISION
JUNEAU, AK

BICKNELL INC. QUALITY CONSTRUCTION

STATE OF ALASKA 49TH Joseph M. Pusich CE 8152 REGISTERED PROFESSIONAL ENGINEER 12/03/20

PDC ENGINEERS
PLAN • DESIGN • CONSTRUCT
A NESPEC COMPANY
9109 Mendenhall Mall Rd. Ste. 4, Juneau, AK 99801
907.780.6060 | AECC605

CONSTRUCTION DETAILS

DATE: Dec 03, 2020
PDC No. 20098JN
SHEET C101

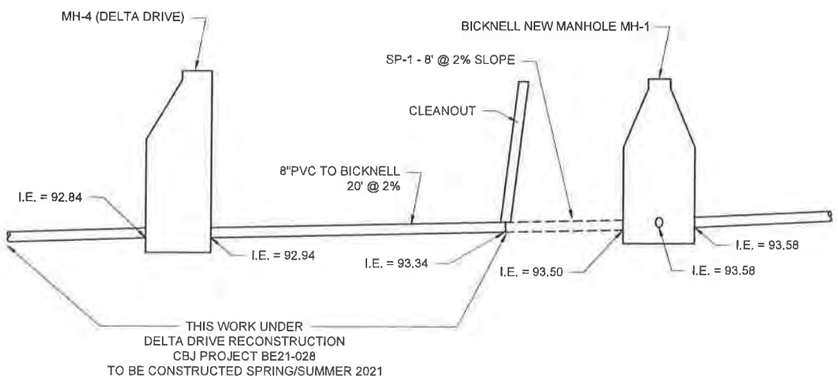

1 / C102 **SEWER PROFILE CONNECTION**

SCALE: NTS

P:\2020\20098JN-Bicknell_Delta\C-C\C300\mc20098JN.dwg PLOT: December 03, 2020 at: 3:51pm Mark.Minnich

DESIGN MSM				
DRAWN MSM				
CHECK JMP				
APPROVED JMP				
FILE:	No.	DATE	REVISION	BY / APRVD.

DELTA DRIVE SUBDIVISION

JUNEAU, AK

BICKNELL INC. QUALITY CONSTRUCTION

STATE OF ALASKA 49TH Joseph M. Pusich CE 8152 REGISTERED PROFESSIONAL ENGINEER 12/03/20

PDC ENGINEERS
PLAN • DESIGN • CONSTRUCT
A DESPEC COMPANY
9109 Mendenhall Mall Rd. Ste. 4, Juneau, AK 99801
907.780.6060 | AECC605

CONSTRUCTION DETAILS

DATE: Dec 03, 2020
PDC No. 20098JN

SHEET C102

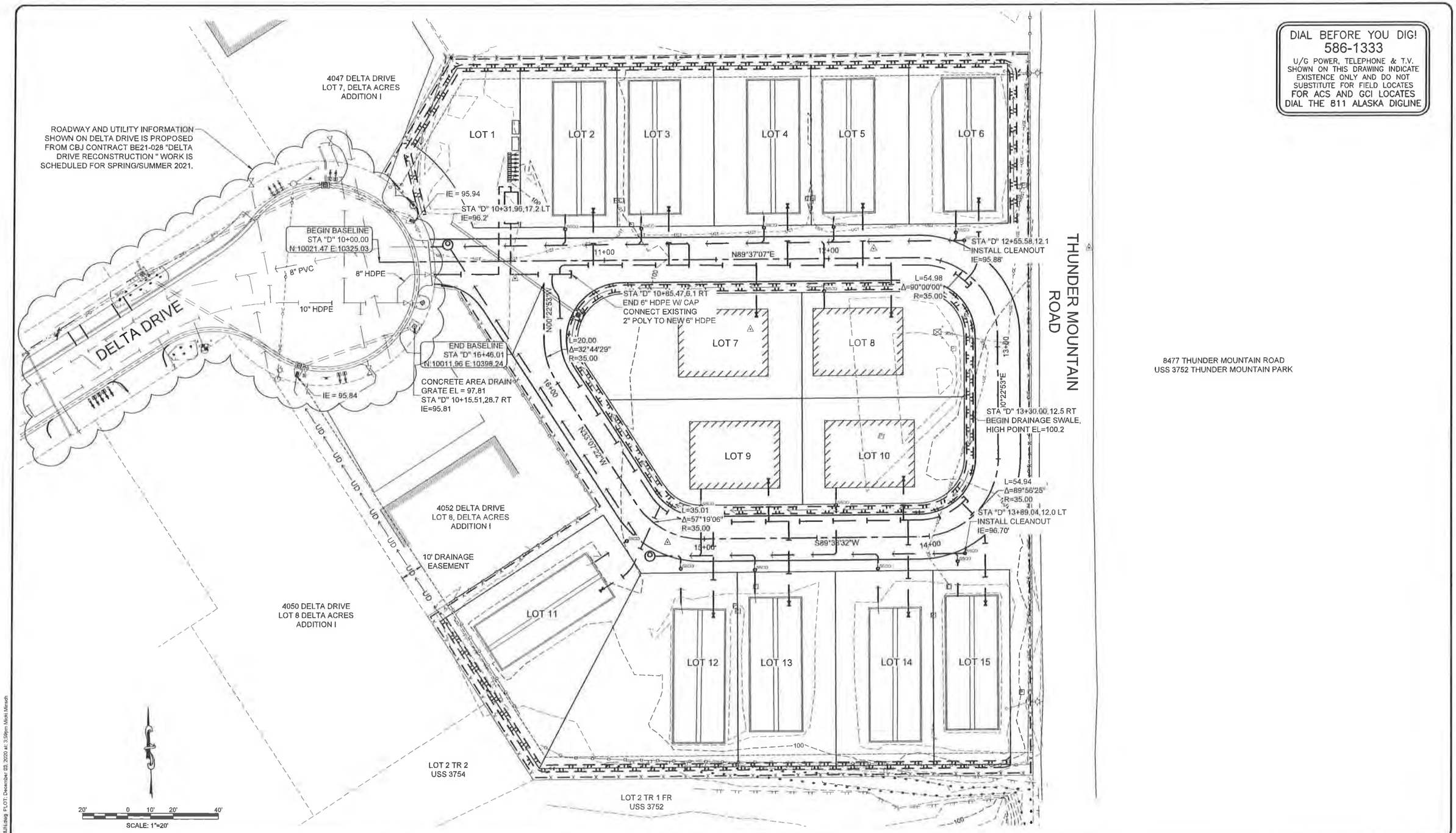

DESIGN MSM				
DRAWN MSM				
CHECK JMP				
APPROVED JMP				
FILE:	No.	DATE	REVISION	BY	APRVD.

DELTA DRIVE SUBDIVISION

JUNEAU, AK

BICKNELL INC. QUALITY CONSTRUCTION

STATE OF ALASKA 49TH Joseph M. Pusich CE 8152 REGISTERED PROFESSIONAL ENGINEER 12/03/20

PDC ENGINEERS
PLAN • DESIGN • CONSTRUCT
A BESPEC COMPANY
9109 Mendenhall Mall Rd. Ste. 4, Juneau, AK 99801
907.780.6060 | AECC605

OVERALL SITE PLAN

DATE: Dec 03, 2020
PDC No. 20098JN

SHEET C200

P:\2020\20098JN-Bicknell_Delta\C-200\1cm\20098JN.dwg PLOT: December 03, 2020 at: 3:59pm Micki Minch

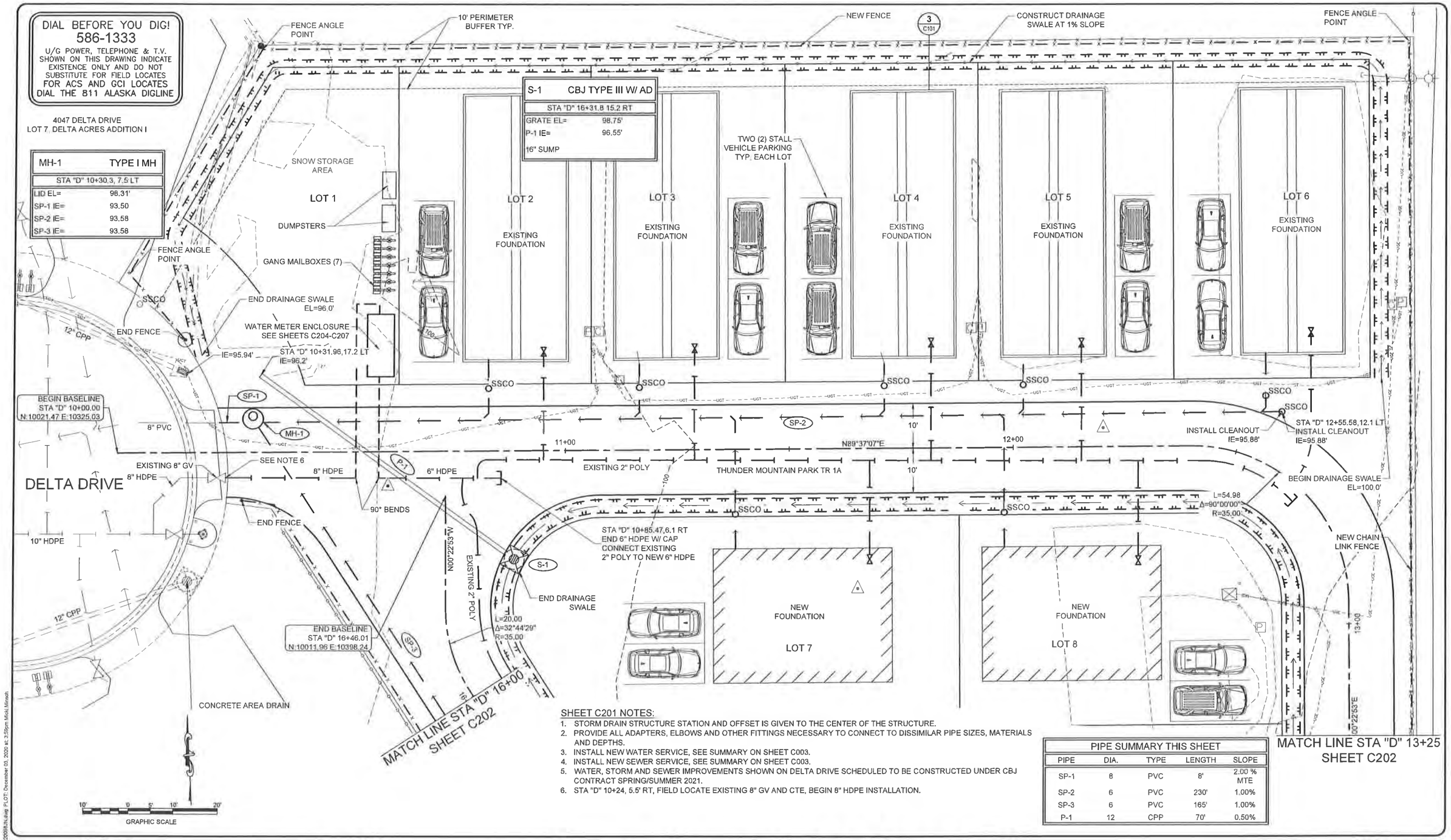

SHEET C201 NOTES:

1. STORM DRAIN STRUCTURE STATION AND OFFSET IS GIVEN TO THE CENTER OF THE STRUCTURE.
2. PROVIDE ALL ADAPTERS, ELBOWS AND OTHER FITTINGS NECESSARY TO CONNECT TO DISSIMILAR PIPE SIZES, MATERIALS AND DEPTHS.
3. INSTALL NEW WATER SERVICE, SEE SUMMARY ON SHEET C003.
4. INSTALL NEW SEWER SERVICE, SEE SUMMARY ON SHEET C003.
5. WATER, STORM AND SEWER IMPROVEMENTS SHOWN ON DELTA DRIVE SCHEDULED TO BE CONSTRUCTED UNDER CBJ CONTRACT SPRING/SUMMER 2021.
6. STA "D" 10+24, 5.5' RT, FIELD LOCATE EXISTING 8" GV AND CTE, BEGIN 8" HDPE INSTALLATION.

PIPE SUMMARY THIS SHEET

PIPE	DIA.	TYPE	LENGTH	SLOPE
SP-1	8	PVC	8'	2.00 % MTE
SP-2	6	PVC	230'	1.00%
SP-3	6	PVC	165'	1.00%
P-1	12	CPP	70'	0.50%

DESIGN MSM
DRAWN MSM
CHECK JMP
APPROVED JMP
FILE:

No.	DATE	REVISION	BY	APRVD.

DELTA DRIVE SUBDIVISION

JUNEAU, AK

BICKNELL INC. QUALITY CONSTRUCTION

STATE OF ALASKA 49TH Joseph M. Pusich CE 8152 REGISTERED PROFESSIONAL ENGINEER 12/03/20

PDC ENGINEERS
PLAN • DESIGN • CONSTRUCT
A NESPEC COMPANY
9109 Mendenhall Mall Rd. Ste. 4, Juneau, AK 99801
907.780.6060 | AECC605

SITE & UTILITY PLAN

DATE: Dec 03, 2020
PDC No. 20098.JN
SHEET C201

P:\2020\20098JN-Bicknell_Delta\C\20091cmd\C0098JN-Ikwg PLOT: December 03, 2020 at: 3:59pm Mick Minsch

SHEET C202 NOTES:

1. STORM DRAIN STRUCTURE STATION AND OFFSET IS GIVEN TO THE CENTER OF THE STRUCTURE FRAME ELEVATION IS GIVEN TO THE TOP, FRONT OF FRAME.
2. PROVIDE ALL ADAPTERS, ELBOWS AND OTHER FITTINGS NECESSARY TO CONNECT TO DISSIMILAR PIPE SIZES, MATERIALS AND DEPTHS.
3. INSTALL NEW WATER SERVICE, SEE SUMMARY ON SHEET C003.
4. INSTALL NEW SEWER SERVICE, SEE SUMMARY ON SHEET C003.

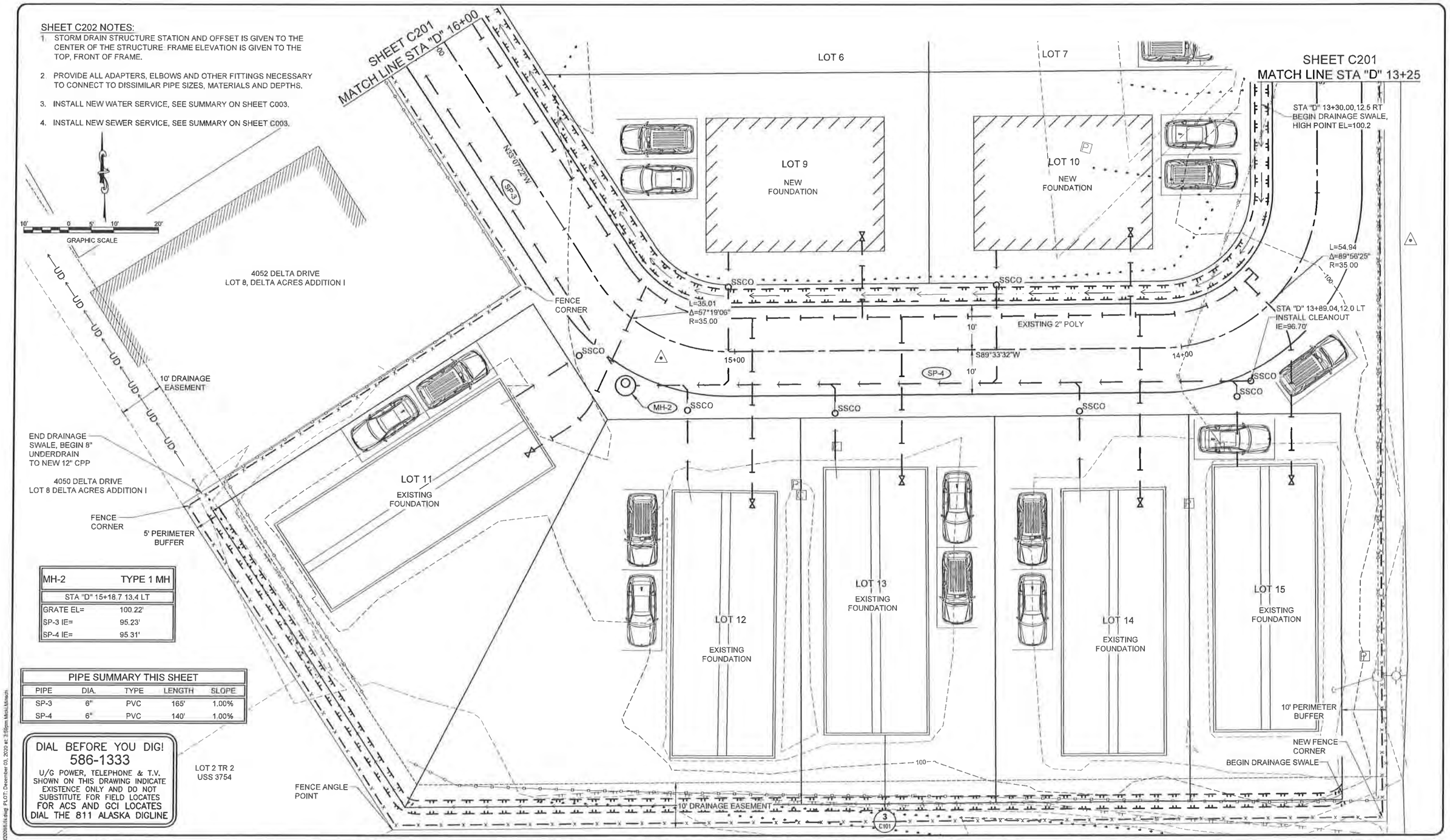

MH-2	TYPE 1 MH
STA "D" 15+18.7 13.4 LT	
GRATE EL=	100.22'
SP-3 IE=	95.23'
SP-4 IE=	95.31'

PIPE SUMMARY THIS SHEET

PIPE	DIA.	TYPE	LENGTH	SLOPE
SP-3	6"	PVC	165'	1.00%
SP-4	6"	PVC	140'	1.00%

DIAL BEFORE YOU DIG!
586-1333
U/G POWER, TELEPHONE & T.V. SHOWN ON THIS DRAWING INDICATE EXISTENCE ONLY AND DO NOT SUBSTITUTE FOR FIELD LOCATES
FOR ACS AND GCI LOCATES DIAL THE 811 ALASKA DIGLINE

DESIGN MSM
DRAWN MSM
CHECK JMP
APPROVED JMP
FILE:

No.	DATE	REVISION	BY	APRVD.

DELTA DRIVE SUBDIVISION

JUNEAU, AK

BICKNELL INC. QUALITY CONSTRUCTION

STATE OF ALASKA 49TH Joseph M. Pusich CE 8152 REGISTERED PROFESSIONAL ENGINEER 12/03/20

PDC ENGINEERS
PLAN • DESIGN • CONSTRUCT
A NESPEC COMPANY
9109 Mendenhall Mall Rd. Ste. 4, Juneau, AK 99801
907.780.6060 | AECC605

SITE & UTILITY PLAN

DATE: Dec 03, 2020
PDC No. 20098JN
SHEET C202

P:\2020\20098JN-Bicknell_Delta\C-C202\Delta\20098JN.dwg PLOT: December 03, 2020 at: 3:56pm Msm,Msmith

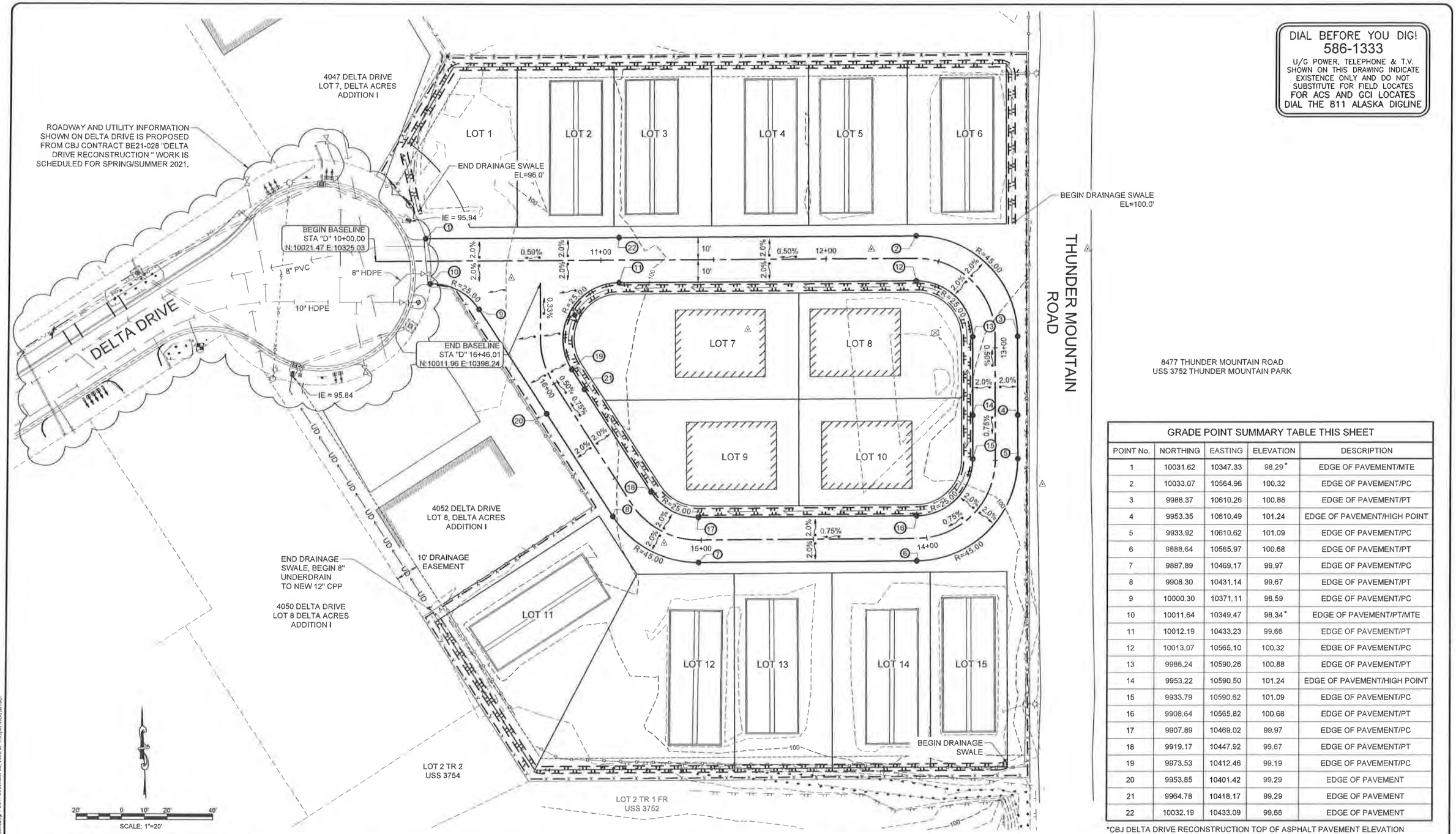

GRADE POINT SUMMARY TABLE THIS SHEET				
POINT No.	NORTHING	EASTING	ELEVATION	DESCRIPTION
1	10031.62	10347.33	98.29*	EDGE OF PAVEMENT/MTE
2	10033.07	10564.96	100.32	EDGE OF PAVEMENT/PC
3	9988.37	10610.26	100.88	EDGE OF PAVEMENT/PT
4	9953.35	10610.49	101.24	EDGE OF PAVEMENT/HIGH POINT
5	9933.92	10610.62	101.09	EDGE OF PAVEMENT/PC
6	9888.64	10565.97	100.68	EDGE OF PAVEMENT/PT
7	9887.89	10469.17	99.97	EDGE OF PAVEMENT/PC
8	9908.30	10431.14	99.67	EDGE OF PAVEMENT/PT
9	10000.30	10371.11	98.59	EDGE OF PAVEMENT/PC
10	10011.64	10349.47	98.34*	EDGE OF PAVEMENT/PT/MTE
11	10012.19	10433.23	99.66	EDGE OF PAVEMENT/PT
12	10013.07	10565.10	100.32	EDGE OF PAVEMENT/PC
13	9988.24	10590.26	100.88	EDGE OF PAVEMENT/PT
14	9953.22	10590.50	101.24	EDGE OF PAVEMENT/HIGH POINT
15	9933.79	10590.62	101.09	EDGE OF PAVEMENT/PC
16	9908.64	10565.82	100.68	EDGE OF PAVEMENT/PT
17	9907.89	10469.02	99.97	EDGE OF PAVEMENT/PC
18	9919.17	10447.92	99.67	EDGE OF PAVEMENT/PT
19	9973.53	10412.46	99.19	EDGE OF PAVEMENT/PC
20	9953.85	10401.42	99.29	EDGE OF PAVEMENT
21	9964.78	10418.17	99.29	EDGE OF PAVEMENT
22	10032.19	10433.09	99.66	EDGE OF PAVEMENT

*CBJ DELTA DRIVE RECONSTRUCTION TOP OF ASPHALT PAVEMENT ELEVATION

DESIGN MSM
DRAWN MSM
CHECK JMP
APPROVED JMP
FILE:

No.	DATE	REVISION	BY	APRVD.

DELTA DRIVE SUBDIVISION

JUNEAU, AK

BICKNELL INC. QUALITY CONSTRUCTION

STATE OF ALASKA 49TH Joseph M. Panich CE 8152 REGISTERED PROFESSIONAL ENGINEER 12/03/20

PDC ENGINEERS
PLAN • DESIGN • CONSTRUCT
A BESPEC COMPANY
9109 Mendenhall Mall Rd. Ste. 4, Juneau, AK 99801
907.780.6060 | AECC605

GRADING PLAN

DATE: Dec 03, 2020
PDC No. 2009BJN
SHEET C203

P:\2009\2009BJN-Bicknell_Delta\C-C203\cnst\2009BJN.dwg PLOT: December 03, 2020 at: 3:59pm Mark Minich

NOTES:

1. CBJ SPECIFICATION 02601 - WATER SYSTEM AND 02602 - VALVES, AND OTHER CBJ STANDARD SPECIFICATIONS APPLY EXCEPT AS MODIFIED BELOW.
2. ALL JOINTS BETWEEN THE CONNECTIONS TO THE MAINLINES ON BOTH SIDES OF THE METER ENCLOSURE SHALL BE RESTRAINED.
3. ALL BOLTS, NUTS AND WASHERS SHALL BE SERIES 300 STAINLESS STEEL.
4. ALL METALLIC VALVES AND FITTINGS SHALL BE FACTORY EPOXY COATED INSIDE AND OUT, 8 MILS MINIMUM.
5. BURIED FITTINGS SHALL BE THRUST BLOCKED PER CBJ STANDARD DETAILS.
6. DIP, HDPE PIPE AND PIPE STANDS ARE PER CBJ SECTION 02602.
7. ALL PIPE AND SPOOL PIECES ABOVE GRADE ARE TO BE FLANGED, WITH 125# FLANGES USE A FLANGE ADAPTOR WITH THE CONNECTION TO HDPE.
8. GATE VALVES SHALL HAVE HAND WHEELS.
9. PRESSURE GAUGE IS TO BE STAINLESS STEEL, GLYCERIN FILLED, WITH A 3½ OR 4-INCH FACE AND 150 TO 160 PSI PRESSURE RANGE.
10. THE GATE VALVE AHEAD OF THE METER IS TO BE FLXFL, WHILE THE VALVES ON EITHER SIDE OF THE DOUBLE CHECK MAY BE FLXVIC. VALVES SHALL COMPLY WITH AWWA C509 OR C515.
11. THE METER SHALL BE A 4-INCH NEPTUNE TRUFLO COMPOUND METER WITH A STRAINER.
12. THE DOUBLE CHECK VALVE SHALL BE A 6-INCH ZURN 350A WITH THE GATE VALVES, OR APPROVED EQUAL. THE DOUBLE CHECK SHALL MEET THE REQUIREMENTS OF AWWA C510 AND BE ASSE AND NSF LISTED.
13. TWO DUPLEX 120-V ELECTRICAL OUTLETS SHALL BE INSTALLED INSIDE THE ENCLOSURE. CONDUIT SHALL RUN FROM THE EXTERIOR MOUNTED DISCONNECT BOX NEAR THE ELECTORAL METER, UNDERGROUND, AND COME UP THROUGH THE CONCRETE SLAB. THE OUTLETS SHALL BE MOUNTED ABOVE THE FLOOR AND LOCATED FOR EASY ACCESS THROUGH THE PANELS.
14. ALL ELECTRICAL WORK SHALL BE PERFORMED BY A LICENSED ELECTRICIAN AND COMPLY WITH ALL APPROPRIATE ELECTRICAL CODES. ANY REQUIRED ELECTRICAL PERMITS SHALL BE OBTAINED COORDINATE WITH THE LOCAL ELECTRICAL UTILITY AS NECESSARY AND PROVIDE ANY EQUIPMENT THEY REQUIRE TO COMPLETE THEIR SERVICE TO THIS LOCATION.

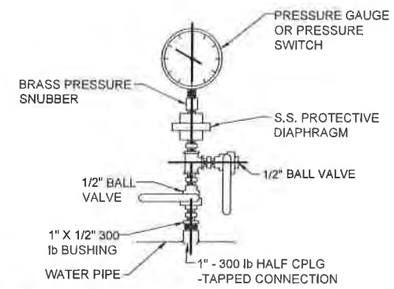

1 C204 **PRESSURE GAUGE OR SWITCH**
SCALE: NTS

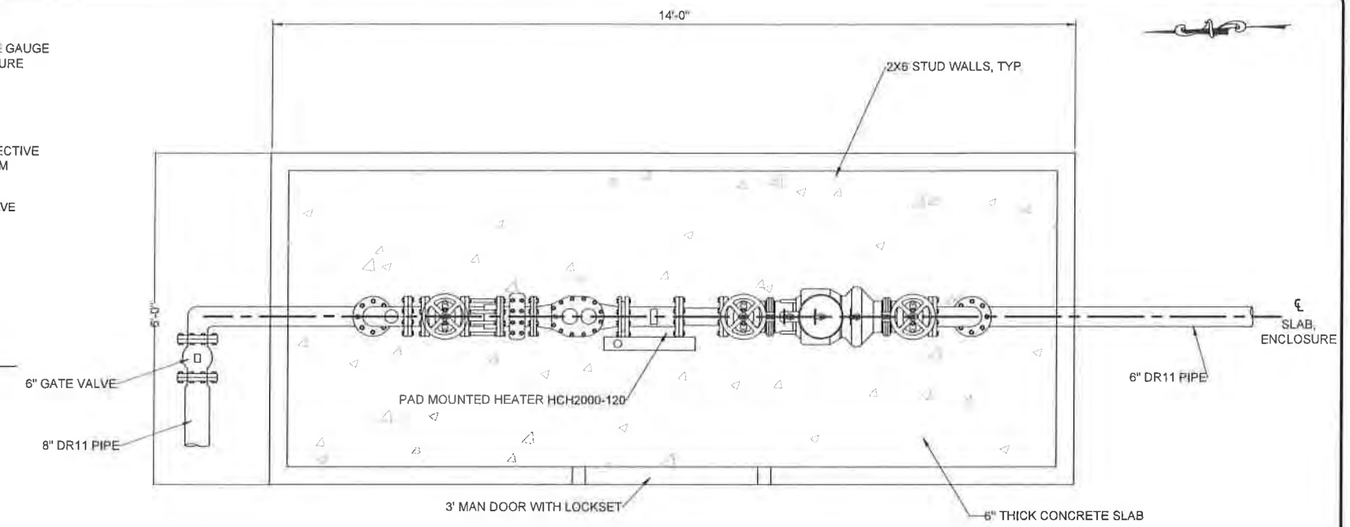

2 C204 **WATER METER ENCLOSURE - PLAN**
SCALE: NTS

DESIGNATION	COMPONENT DESCRIPTION
A	6X4" DI REDUCING 90° ELBOW W/ TAP AND 1" AIR RELEASE VALVE
B	4" NRS GATE VALVE
C	4" DISMANTLING JOINT, SET TO 8" ±
D	4" METER W/ STRAINER
E	4" DI PIPE SPOOL W/ 1" TAPPED CONNECTION, SAMPLING PORT, AND PRESSURE GAGUE (SEE DETAIL)
F	4" SPOOL PIECE
G	4" DOUBLE CHECK VALVE
H	4" DI 90° BEND

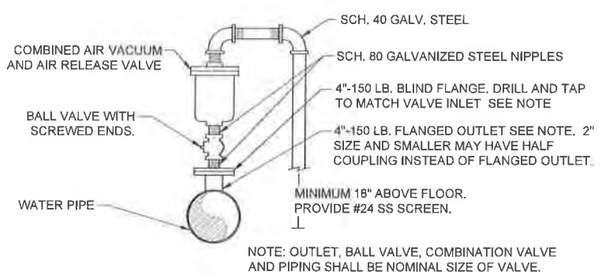

3 C204 **AIR/VACUUM & AIRE RELEASE VALVE ASSEMBLY**
SCALE: NTS

NOTES:
1. ALL JOINTS TO BE FUSED, FLANGED, OR RESTRAINED TO WITHSTAND A MINIMUM PRESSURE OF 200 PSI.

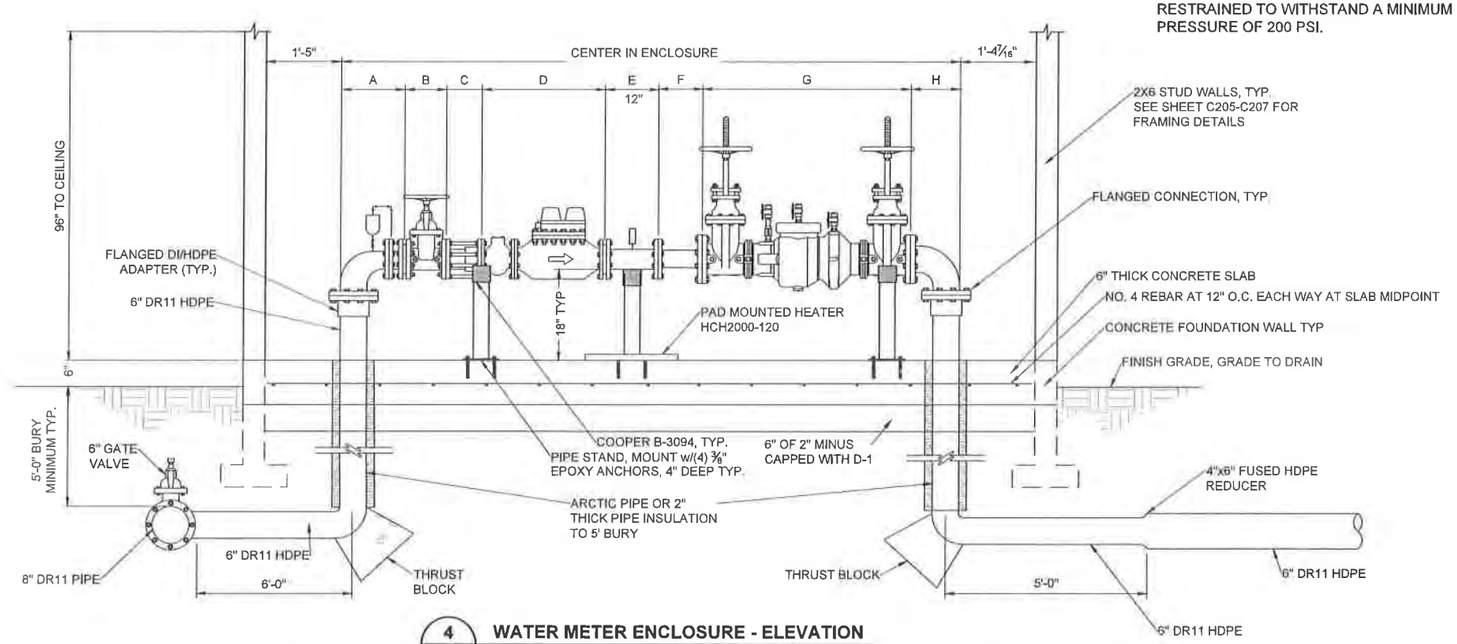

4 C204 **WATER METER ENCLOSURE - ELEVATION**
SCALE: NTS

DESIGN MSM
DRAWN MSM
CHECK JMP
APPROVED JMP
FILE:

No.	DATE	REVISION	BY	APRVD.

DELTA DRIVE SUBDIVISION
JUNEAU, AK

BICKNELL INC. QUALITY CONSTRUCTION

STATE OF ALASKA 49TH Joseph M. Pusich CE 8152 REGISTERED PROFESSIONAL ENGINEER 12/03/20

PDC ENGINEERS
PLAN • DESIGN • CONSTRUCT
A BESPEC COMPANY
9109 Mendenhall Mall Rd. Ste. 4, Juneau, AK 99801
907.780.6060 | AECC605

WATER METER ENCLOSURE DETAILS

DATE: Dec 03, 2020
PDC No. 2009BJN
SHEET C204

P:\2020\2009BJN-Bicknell_Delta\C-C2501and\2009BJN.dwg PLOT: December 03, 2020 at: 3:59pm Mikki Minich

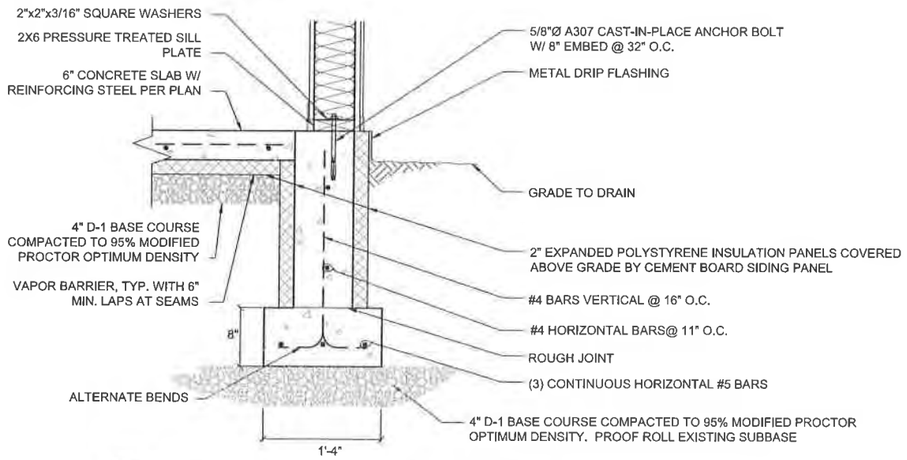

1 C205 **FOUNDATION AND STEM WALL DETAIL**
SCALE: NTS

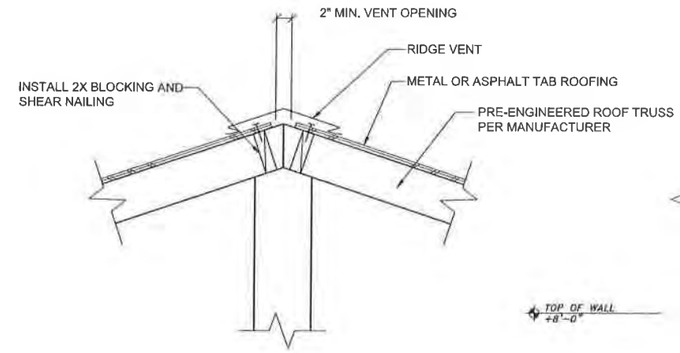

2 C205 **ROOF RIDGE VENT DETAIL**
SCALE: NTS

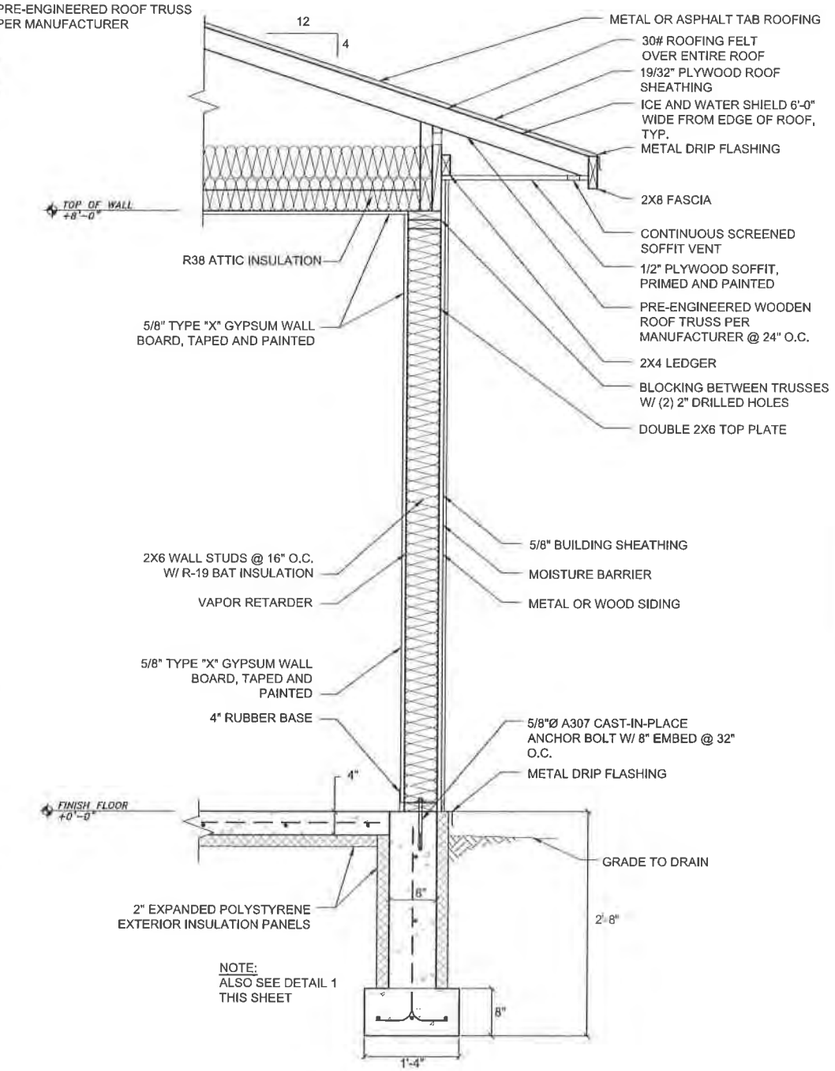

5 C205 **WALL SECTION**
SCALE: NTS

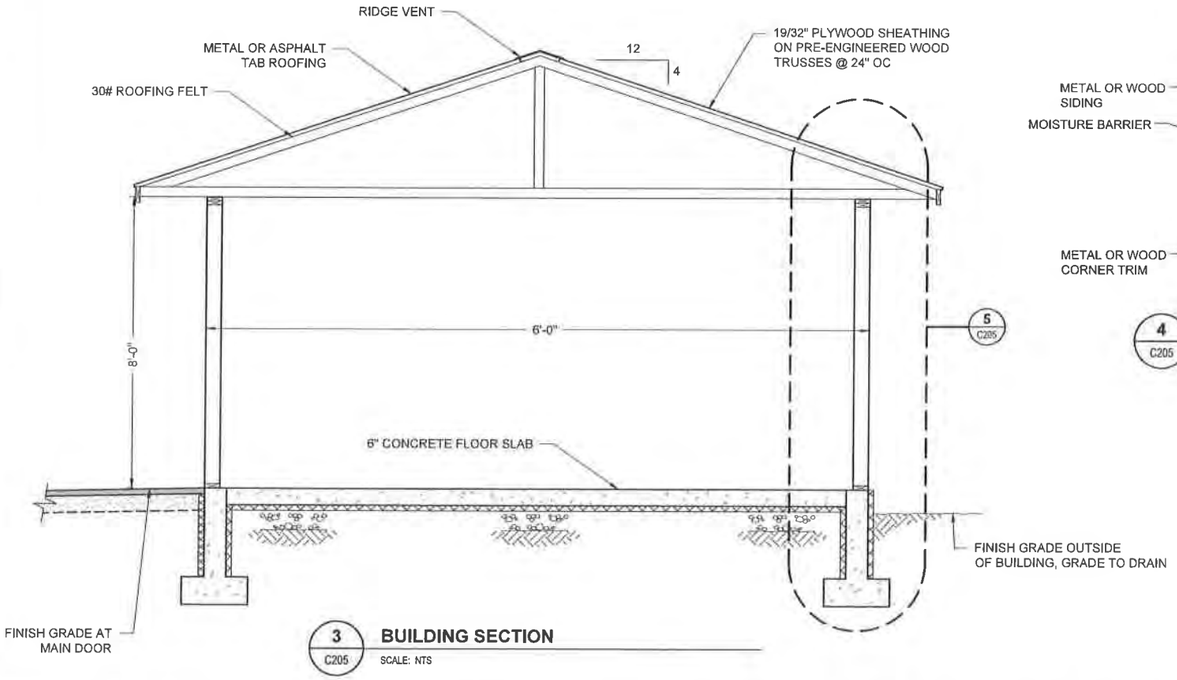

3 C205 **BUILDING SECTION**
SCALE: NTS

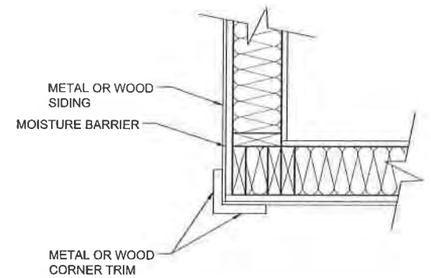

4 C205 **OUTSIDE CORNER DETAIL**
SCALE: NTS

DESIGN MSM
DRAWN MSM
CHECK JMP
APPROVED JMP
FILE

No.	DATE	REVISION	BY	APRVD.

DELTA DRIVE SUBDIVISION

JUNEAU, AK

BICKNELL INC. QUALITY CONSTRUCTION

STATE OF ALASKA 49TH Joseph M. Pusich CE 8152 REGISTERED PROFESSIONAL ENGINEER 12/03/20

PDC ENGINEERS
PLAN • DESIGN • CONSTRUCT
A BESPEC COMPANY
9109 Mendenhall Mall Rd. Ste. 4, Juneau, AK 99801
907.780.6060 | AECC605

WATER METER ENCLOSURE DETAILS

DATE: Dec 03, 2020
PDC No. 20098.JN

SHEET
C205

P:\2020\20098JN-Bicknell_Delta\C\C205\set\20098JN.dwg PLOT: December 03, 2020 at: 3:59pm Micki Minisch

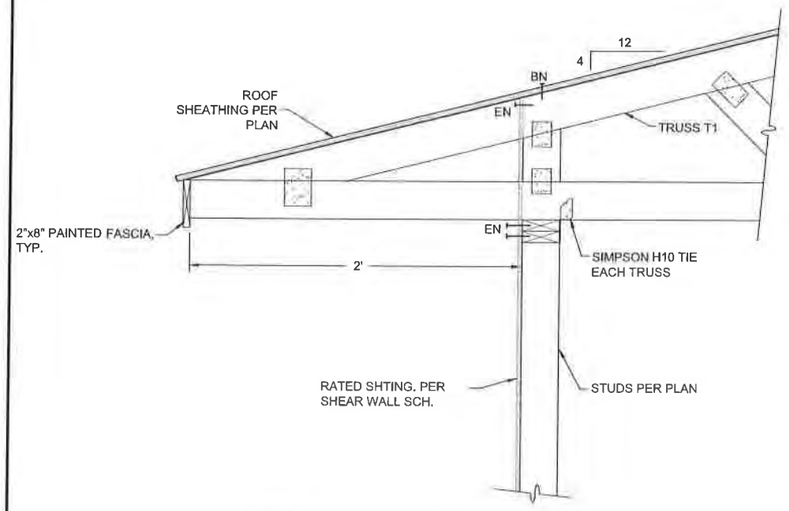

1 C206 **ROOF TRUSS TO WALL CONNECTION**
SCALE: NTS

NOTES:
1. WHERE NO STUD TO STUD NAILING IS INDICATED, NAIL STUDS TOGETHER w/ 16d @ 12"o.c., TYP.
2. REF. PLANS FOR STUD SIZE & SPACING

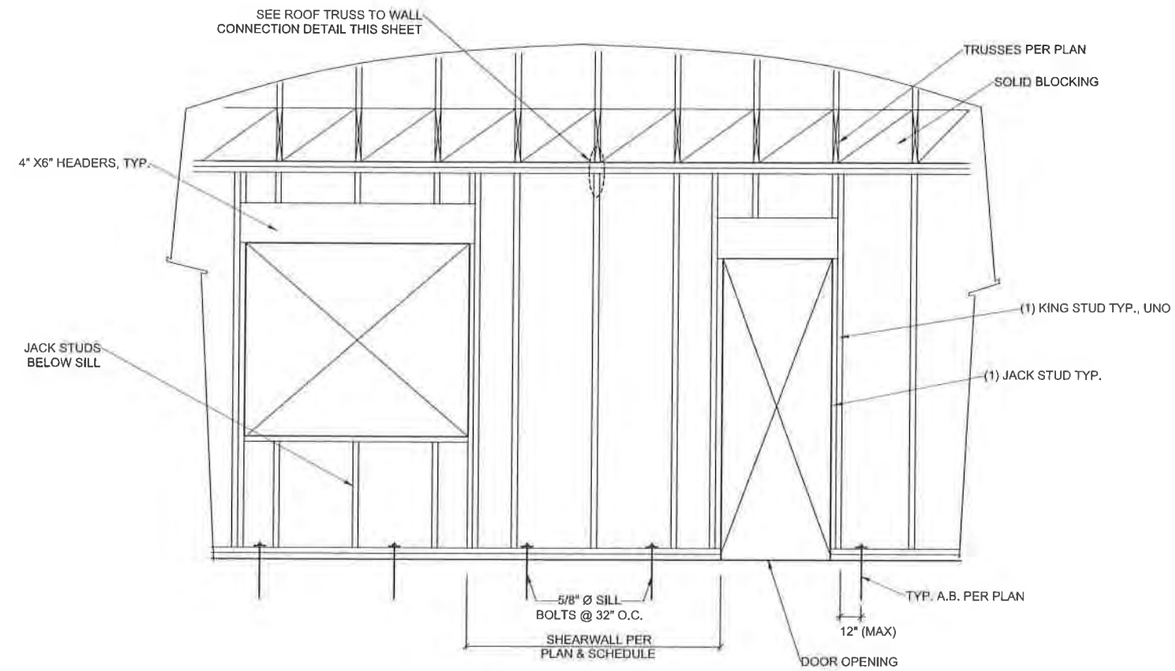

3 C206 **TYPICAL STUD FRAMING**
SCALE: NTS

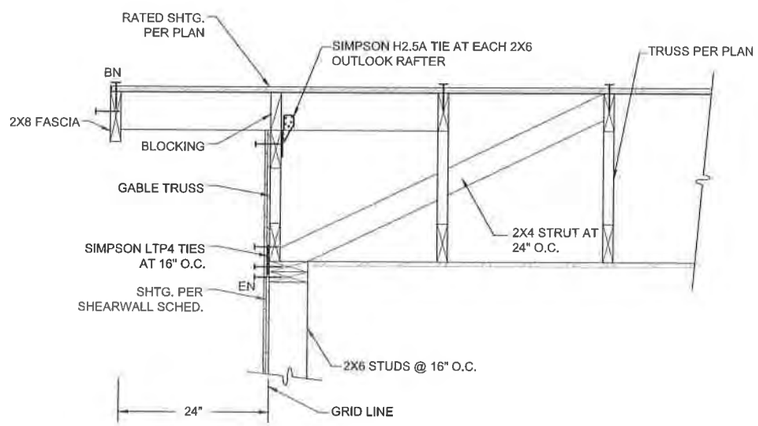

2 C206 **GABLE END DETAIL**
SCALE: NTS

FRAMING NAILING SCHEDULE

CONNECTION	NAILING	CONNECTION	NAILING
TOP PLATE TO STUD, END NAIL	2x4 (2)- 16d 2x6 (3)- 16d 1 3/4"x5 1/2" LVL (3)-16d 1 3/4"x7 1/4" LVL (4)-16d 1 3/4"x9 1/4" LVL (5)-16d 1 3/4"x11 1/4" LVL (6)-16d	TOP PLATE LAPS (4'-0" MINIMUM)	16d AT 6" O.C.
STUD TO SILL PLATE, END NAIL	2x4 (2)- 16d 2x6 (3)- 16d 1 3/4"x5 1/2" LVL (3)-16d 1 3/4"x7 1/4" LVL (4)-16d 1 3/4"x9 1/4" LVL (5)-16d 1 3/4"x11 1/4" LVL (6)-16d	BUILT-UP HEADERS AND BEAMS	16d AT 16" O.C. ALONG TOP AND BOTTOM EDGE
DOUBLE SILL PLATES, FACE NAIL (STAGGER)	10d AT 12" O.C.	BUILT-UP COLUMNS BELOW BEAMS, FACE NAIL	16d AT 16" O.C. - EACH FACE
DOUBLE STUDS, FACE NAIL (STAGGER)	10d AT 12" O.C. - EACH FACE	BUILT-UP CORNER STUDS (3 STUDS MINIMUM)	16d AT 24" O.C.
DOUBLE TOP PLATES, FACE NAIL	16d AT 24" O.C.	BACKING AND BLOCKING AT TRUSSES AND 2x FRAMING, END NAIL OR TOE NAIL	(2)- 16d EACH END
TOP PLATES AT WALL INTERSECTIONS, FACE NAIL	(2)- 16d	BACKING AND BLOCKING AT I-JOIST FRAMING	SIMPSON Z2 OR EQUAL AT EACH END [W/(4)-10dx1 1/2" NAILS]

P:\2020\20098JN\Bicknell_Delta\C\20091new\20098JN.dwg PLOT: December 03, 2020 at 3:59pm MSM Mitsch

DESIGN MSM
DRAWN MSM
CHECK JMP
APPROVED JMP
FILE:

No.	DATE	REVISION	BY	APRVD.

DELTA DRIVE SUBDIVISION
JUNEAU, AK

BICKNELL INC. QUALITY CONSTRUCTION

STATE OF ALASKA 49TH Joseph M. Pursich CE 8152 REGISTERED PROFESSIONAL ENGINEER 12/03/20

PDC ENGINEERS
PLAN • DESIGN • CONSTRUCT
A NESPEC COMPANY
9109 Mendenhall Mall Rd. Ste 4, Juneau, AK 99801
907.780.6060 | AECC605

WATER METER ENCLOSURE DETAILS

DATE: Dec 03, 2020
PDC No. 20098JN
SHEET C206

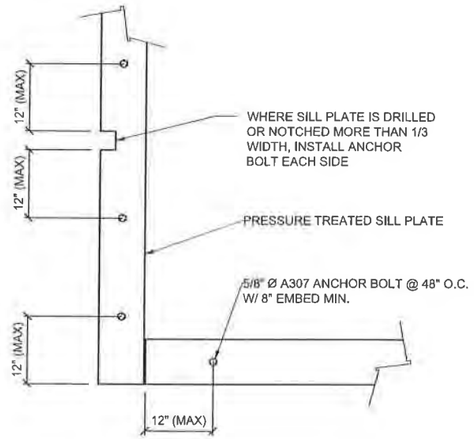

PLAN VIEW

1 / C207 SILL PLATE BOLTING TO CONCRETE
SCALE: NTS

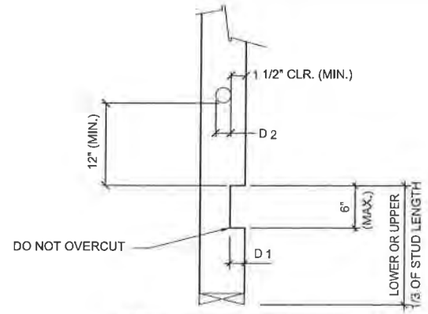

BEARING WALLS		
STUD SIZE	MAX. D 1 (NOTCH)	MAX. D 2 (HOLE)
2x6	1 1/4"	1 1/2"

2 / C207 ALLOWABLE HOLES AND NOTCHES IN STUDS
SCALE: NTS

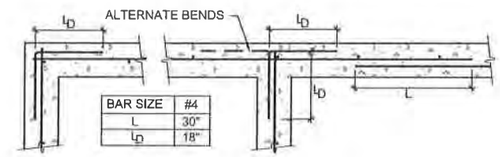

BAR SIZE	#4
L	30"
l_D	18"

SINGLE CURTAIN @ STEM WALLS

3 / C207 WALL & FOOTING REINFORCING AT CORNERS & INTERSECTIONS
SCALE: NTS

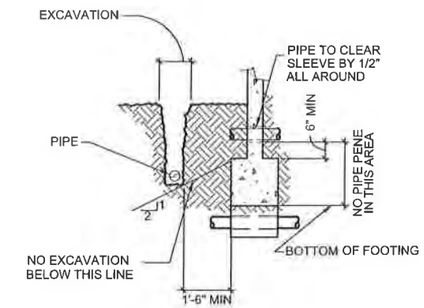

FOOTING SECTION

4 / C207 PIPES & TRENCHES AT FOUNDATIONS
SCALE: NTS

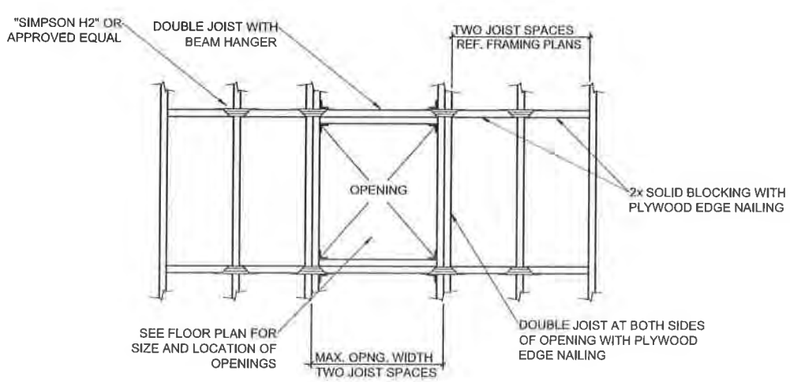

5 / C207 TYP. OPENINGS IN FLOORS AND ROOF
SCALE: NTS

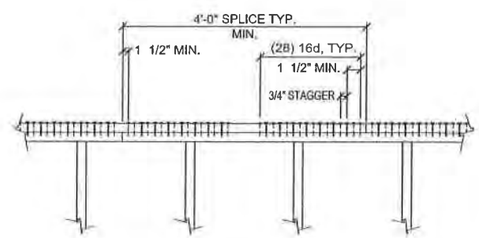

NAILED SPLICE

NOTES:

1. MINIMUM PLATE SPLICE IS (28) 16d EA. SIDE OF EA. PLATE JOINT. MSTC78 IS ALTERNATE.
2. STAGGER NAILS IN 2 ROWS.
3. OCCURS AT TOP PLATES UNDER ROOF.

6 / C207 TYPICAL PLATE SPICE
SCALE: NTS

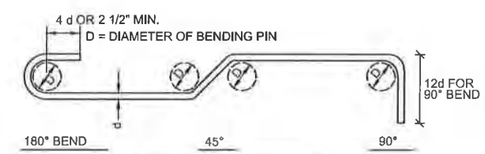

BAR SIZE	MIN. PIN DIA.
#3 THRU #8	6 BAR DIA.

LEGEND (FOR REINF. BENDS NOT SHOWN TO SCALE)

- DENOTES 90° BEND IN THE PLANE OF THE DWG.
- DENOTES 90° BEND PERPENDICULAR TO THE PLANE OF THE DWG.
- DENOTES BEND PERPENDICULAR TO THE PLANE OF THE DWG.
- DENOTES BEND IN THE PLANE OF THE DWG.
- DENOTES OFFSET IN THE PLANE OF THE DWG.

7 / C207 STANDARD HOOKS AND BENDS
SCALE: NTS

P:\2020\20098JN-Bicknell_Delta\C\C207\C207-20098JN.dwg, PLOT: December 03, 2020 at 3:39pm, Mike Smith

DESIGN	MSM
DRAWN	MSM
CHECK	JMP
APPROVED	JMP
FILE:	

No.	DATE	REVISION	BY	APRVD.

DELTA DRIVE SUBDIVISION

JUNEAU, AK

BICKNELL INC. QUALITY CONSTRUCTION

STATE OF ALASKA 49TH Joseph M. Punich CE 8152 REGISTERED PROFESSIONAL ENGINEER 12/03/20

PDC ENGINEERS
PLAN • DESIGN • CONSTRUCT
A BESPEC COMPANY
9109 Mendenhall Mall Rd. Ste. 4, Juneau, AK 99801
907.780.6060 | AECC605

WATER METER ENCLOSURE DETAILS

DATE: Dec 03, 2020
PDC No. 20098JN

SHEET C207

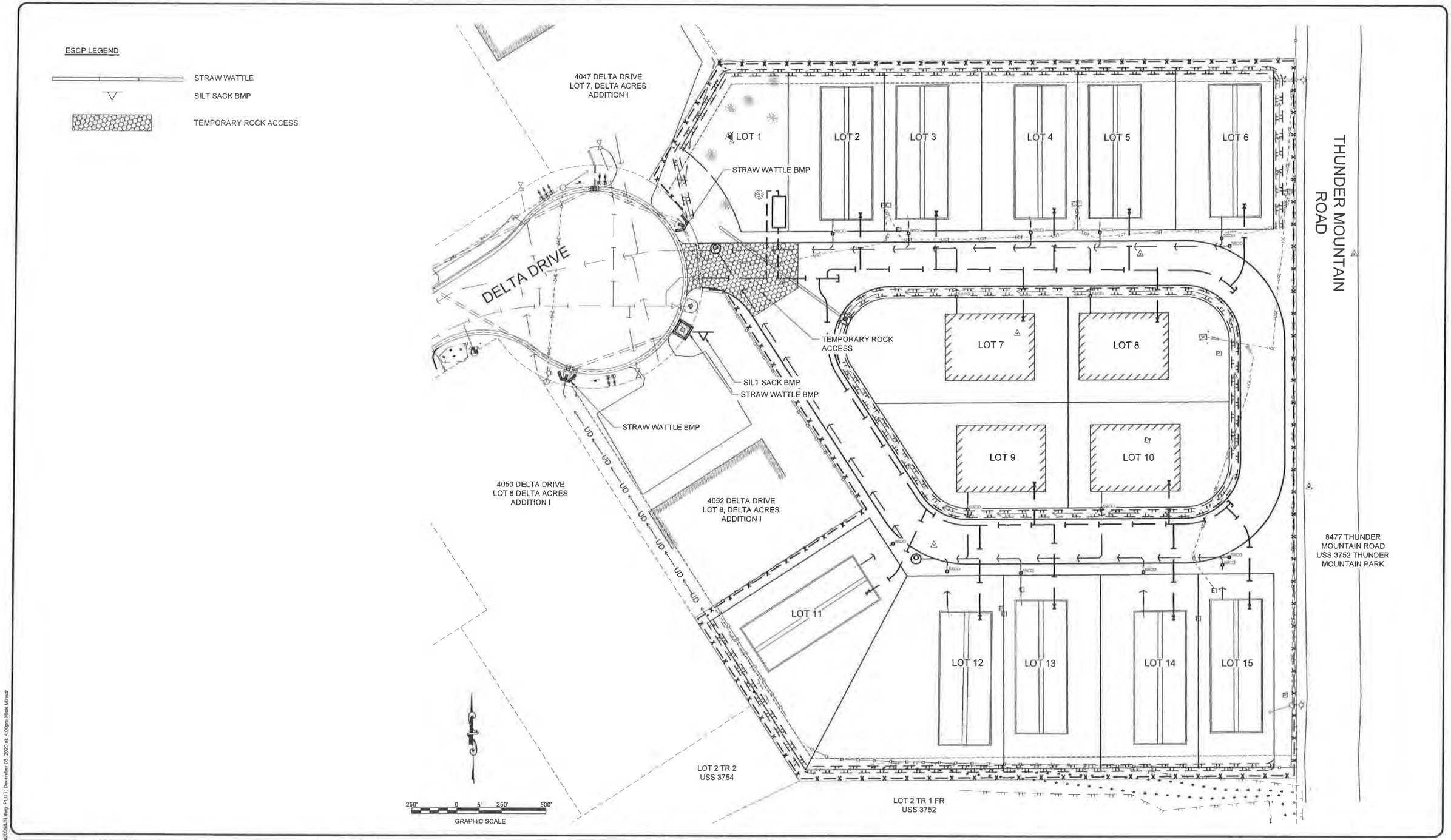

DESIGN MSM				
DRAWN MSM				
CHECK JMP				
APPROVED JMP				
FILE:	No.	DATE	REVISION	BY	APRVD.

DELTA DRIVE SUBDIVISION

JUNEAU, AK

BICKNELL INC. QUALITY CONSTRUCTION

STATE OF ALASKA 49TH Joseph M. Pusich CE 8152 REGISTERED PROFESSIONAL ENGINEER 12/03/20

PDC ENGINEERS
PLAN • DESIGN • CONSTRUCT
A BESPEC COMPANY
9109 Mendenhall Mall Rd. Ste. 4, Juneau, AK 99801
907.780.6060 | AECC605

EROSION & SEDIMENT CONTROL PLAN

DATE: Dec 03, 2020
PDC No. 20098JN

SHEET C300

F:\2020\20098JN-Bicknell_Delta\C\C600\new\20098JN.dwg PLOT: December 03, 2020 at: 4:03pm Mieka Minich

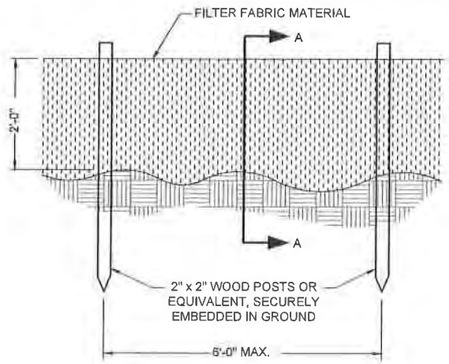

ELEVATION VIEW

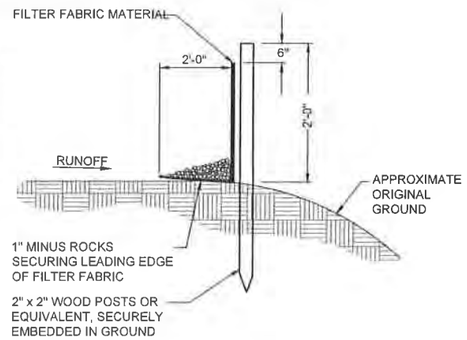

SECTION "A-A"

1 C301 SILT FENCE DETAIL

SCALE: NTS

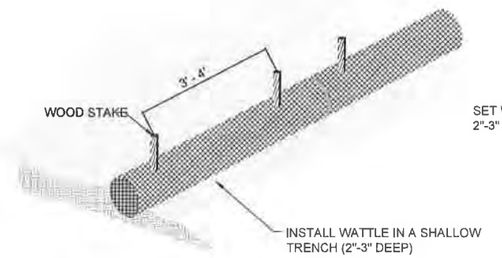

TYPICAL WATTLE ELEVATION VIEW

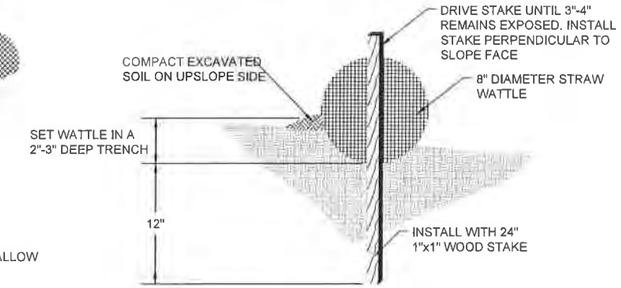

WATTLE ENTRENCHMENT

WATTLE NOTES:

1. BEGIN AT THE LOCATION WHERE THE WATTLE IS TO BE INSTALLED BY EXCAVATING A 2"-3" DEEP x 9" WIDE TRENCH ALONG THE CONTOUR OF THE SLOPE. EXCAVATED SOIL SHOULD BE PLACED UP-SLOPE FROM THE ANCHOR TRENCH.
2. PLACE THE WATTLE IN THE TRENCH SO THAT IT CONTOURS TO THE SOIL SURFACE COMPACT SOIL FROM THE EXCAVATED TRENCH AGAINST THE WATTLE ON THE UPHILL SIDE. ADJACENT WATTLES SHOULD TIGHTLY ABUT EACH OTHER.
3. SECURE THE WATTLE WITH 24" STAKES EVERY 3-4' AND WITH A STAKE ON EACH END. STAKES SHOULD BE DRIVEN THROUGH THE MIDDLE OF THE WATTLE LEAVING AT LEAST 3-4" OF STAKE EXTENDING ABOVE THE WATTLE STAKES SHOULD BE DRIVEN PERPENDICULAR TO SLOPE FACE.

2 C301 STRAW WATTLE IN GROUND DETAIL

SCALE: NTS

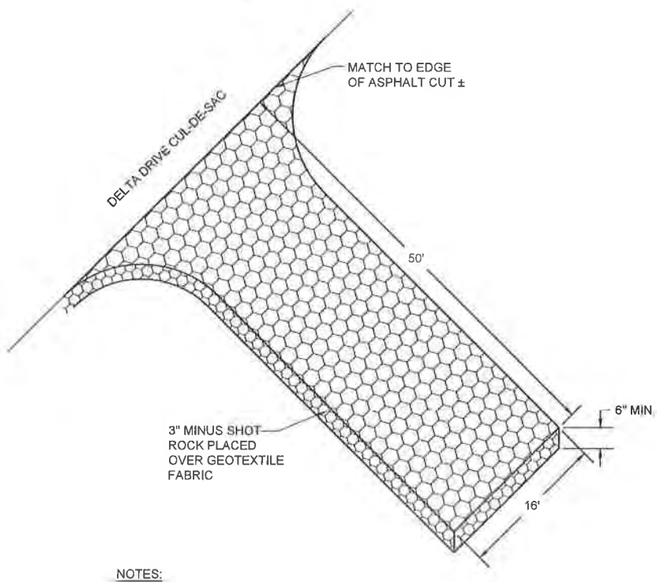

NOTES:

1. MAINTENANCE OF TEMPORARY ROCK ACCESS SHALL INCLUDE REPLACING ROCK AS REQUIRED TO MAINTAIN AN EFFECTIVE AREA FOR SHEDDING EARTHEN MATERIAL FROM CONSTRUCTION EQUIPMENT AND PREVENTING MATERIAL FROM GETTING TRACKED ON TO DELTA DRIVE.
2. CLEAN AND REMOVE ALL TRACKED MATERIAL (MUD, SILT, DEBRIS, ETC.) OFF OF THE PROJECT SITE DAILY AND DISPOSE OF MATERIAL AT AN APPROVED DISPOSAL LOCATION.
3. TEMPORARY ROCK ACCESS APPROACHES SHALL BE INSTALLED AS SHOWN ON THE EROSION AND SEDIMENT CONTROL PLAN OR AS DIRECTED BY THE ENGINEER.

3 C301 TEMPORARY ROCK ACCESS

SCALE: NTS

EROSION AND SEDIMENT CONTROL NOTES:

1. EROSION AND SEDIMENT CONTROL PLANS (E.S.C.P) SHOWN ARE INTENDED AS A MINIMUM LEVEL OF EROSION CONTROL ONLY. THE E.S.C P IS TO BE USED BY THE CONTRACTOR TO DEVELOP A SITE SPECIFIC STORM WATER POLLUTION PREVENTION PLAN (SWPPP). ALL SEDIMENTATION FROM ON SITE DRAINAGE AND GRADING SHALL BE CONTAINED ON SITE. THE CONTRACTOR IS SOLELY RESPONSIBLE FOR DAMAGE TO ADJACENT PROPERTIES AND STREAMS FROM CONSTRUCTION RELATED EROSION AND SILTATION DURING THE COURSE OF WORK. ANY DAMAGE RESULTING FROM SUCH EROSION AND SILTATION SHALL BE CORRECTED AT THE EXPENSE OF THE CONTRACTOR.
2. ALL EROSION CONTROL/SEDIMENTATION CONTROL BARRIERS SHALL BE IN PLACE PRIOR TO COMMENCING EXCAVATION OR FILLING OPERATIONS.
3. TEMPORARY EROSION CONTROL SYSTEM WILL NOT BE REMOVED UNTIL GERMINATION OF SEEDING AND NO EROSION/SEDIMENT PROBLEMS EXIST.
4. COLLECTED SEDIMENT WILL BE DISPOSED OF OFF SITE AT AN EXISTING APPROVED DUMPSITE. COLLECTED SEDIMENT MAY NOT BE USED AS EMBANKMENT.
5. DEWATERING OF WORK AREAS BY PUMPING SHALL BE IMPLEMENTED TO REDUCE THE PROJECTS WATER QUALITY IMPACTS. THE PUMP DISCHARGE NEEDS TO BE FILTERED THROUGH SEDIMENT CONTROL DEVICES SUCH AS "DIRTBAG" OR SEDIMENT CONTROL STRUCTURES BEFORE IT CAN ENTER FISH HABITATS AT ANY POINT.
6. CONTRACTOR SHALL KEEP CLEAN AND DISPOSE OF ALL EARTHEN MATERIAL TRACKED ONTO DELTA DRIVE. THIS SHALL INCLUDE SWEEPING WITH POWER BROOM, VACUUMING AND WATERING ON A DAILY BASIS DURING HAULING ACTIVITY OR MORE FREQUENTLY AS DIRECTED BY THE ENGINEER.

DESIGN MSM
DRAWN MSM
CHECK JMP
APPROVED JMP
FILE:

No.	DATE	REVISION	BY	APRVD.

DELTA DRIVE SUBDIVISION

JUNEAU, AK

BICKNELL INC. QUALITY CONSTRUCTION

STATE OF ALASKA 49TH Joseph M. Pusich CE 8152 REGISTERED PROFESSIONAL ENGINEER 12/03/20

PDC ENGINEERS
PLAN • DESIGN • CONSTRUCT
A NESPEC COMPANY
9109 Mendenhall Mall Rd. Ste. 4, Juneau, AK 99801
907.780.6060 | AECC605

EROSION & SEDIMENT CONTROL DETAILS

DATE: Dec 03, 2020
PDC No. 20098JN

SHEET C301

P:\2020\20098JN-Bicknell_Delta\CV\C8001.dwg\20098JN.dwg PLOT: December 03, 2020 at: 4:05pm Micah.Mitnesh

GENERAL NOTES

1. ALL BEARINGS SHOWN ARE TRUE BEARINGS AS ORIENTED TO THE BASIS OF BEARING AND DISTANCES SHOWN ARE REDUCED TO HORIZONTAL FIELD DISTANCES.
2. THE ERROR OF CLOSURE OF THIS SURVEY DOES NOT EXCEED 1:10,000.
3. BASIS OF BEARING
   THE BASIS OF BEARING FOR THIS PLAT IS THE BEARING OF S 0° 01' 00" W, AS SHOWN ON PLAT No. 73-17, DATED OCTOBER 29, 1973, BETWEEN THE RECOVERED MONUMENTS, AS SHOWN ON THIS PLAT.
4. WHERE RECORD SURVEY COURSES (BEARINGS AND/OR DISTANCES) DIFFER FROM THAT OF ACTUAL FIELD MEASURED AND/OR COMPUTED SURVEY COURSES, THE RECORD BEARING AND/OR DISTANCES IS SHOWN WITHIN PARENTHESIS AND REFERENCED TO A RECORDED PLAT (R#).
5. THE PRELIMINARY FIELD SURVEYING WAS PERFORMED ON MAY 26-27, 2020, UTILIZING A TRIMBLE S7 ROBOTICS TOTAL STATION WITH STANDARD LASER RANGING MEASUREMENTS.
6. RECORD INFORMATION
   THE RECORD INFORMATION USED FOR THIS SUBDIVISION IS DERIVED FROM THE OFFICIAL PLATS: PLAT No. 73-17, JUNEAU RECORDING DISTRICT, DATED OCTOBER 29, 1973 (R1), PLAT No. 92-18, JUNEAU RECORDING DISTRICT, DATED APRIL 28,1992 (R2);
7. ALL DISTANCES ARE MEASURED IN U.S. SURVEY FEET, AND HAVE BEEN REDUCED TO THEIR HORIZONTAL EQUIVALENTS.
8. DOMESTIC WATER AND SANITARY SEWER DISPOSAL PROVIDED BY THE CITY AND BOROUGH OF JUNEAU PUBLIC UTILITIES.
9. THIS PLAT CREATES AN ALTERNATE RESIDENTIAL SUBDIVISION PURSUANT TO AND GOVERNED BY THE CITY AND BOROUGH OF JUNEAU LAND USE CODE TITLE 49 ARTICLE IX. EACH OWNER OF A UNIT-LOT IS REQUIRED TO, AND SHALL BE, THROUGHOUT THEIR OWNERSHIP, A MEMBER OF THE THUNDER MOUNTAIN VIEWS HOA, INC., REQUIRED TO PAY ASSESSMENTS ASSESSED BY THUNDER MOUNTAIN VIEWS HOA, INC.
10. THERE SHALL BE NO DISTURBANCE OR DEVELOPMENT WITHIN THE PERIMETER BUFFER SHOWN ON THIS PLAT, AS REQUIRED BY CBJ 49.15.920(j).
11. AT TIME OF RECORDING, UNIT LOTS 2 THROUGH 11 AND 13 THROUGH 15 ARE LIMITED TO ONE SINGLE FAMILY DWELLING, UNIT LOT 12 MAY BE PERMITTED ONE SINGLE FAMILY DWELLING AND ONE ACCESSORY APARTMENT. SEE CBJ 49.15 ARTICLE IX FOR CURRENT REGULATIONS.
12. LOT 1, BLANKET EASEMENT, PERIMETER BUFFER, AND DRAINAGE EASEMENTS SHOWN ON THIS PLAT ARE PRIVATE EASEMENTS, AND THE LAND ON WHICH THE PRIVATE EASEMENTS ARE LOCATED IS OWNED AND MANAGE BY THUNDER MOUNTAIN VIEWS HOA, INC.

OWNERSHIP CERTIFICATE

BICKNELL, INC. HEREBY CERTIFIES THAT BICKNELL, INC. IS THE OWNER OF THE PROPERTY SHOWN AND DESCRIBED HEREON AND THAT IT HEREBY ADOPTS THIS PLAT OF SUBDIVISION WITH ITS FREE CONSENT, AND DEDICATE ALL STREETS, ALLEYS, WALKS, PARKS AND OTHER OPEN SPACES TO PUBLIC OR PRIVATE USE AS NOTED:

OWNER _____ DATE: _____ 2021
ROSCOE V. BICKNELL, IV
BICKNELL, INC.

NOTARY ACKNOWLEDGMENT

UNITED STATES OF AMERICA)
) SS
STATE OF ALASKA)

THIS IS TO CERTIFY THAT ON THIS _____ DAY OF _____, 2021, BEFORE ME, THE UNDERSIGNED A NOTARY PUBLIC IN AND FOR THE STATE OF ALASKA, DULY COMMISSIONED AND SWORN, PERSONALLY APPEARED _____ TO ME KNOWN TO BE THE PERSONS DESCRIBED IN AND WHO EXECUTED THE ABOVE AND FOREGOING INSTRUMENT, AND ACKNOWLEDGED TO ME THAT THEY SIGNED AND SEALED THE SAME FREELY AND VOLUNTARILY FOR THE USES AND PURPOSES THEREIN MENTIONED
WITNESS MY HAND AND OFFICIAL SEAL THE DAY AND YEAR IN THIS CERTIFICATE FIRST ABOVE WRITTEN.

_____
NOTARY PUBLIC FOR ALASKA

MY COMMISSION EXPIRES: _____

PLANNING COMMISSION PLAT APPROVAL

I HEREBY CERTIFY THAT THE SUBDIVISION PLAT SHOWN HEREON HAS BEEN FOUND TO COMPLY WITH THE SUBDIVISION REGULATIONS OF THE CITY AND BOROUGH OF JUNEAU, ALASKA AND THAT SAID PLAT HAS BEEN APPROVED BY THE PLANNING COMMISSION BY PLAT RESOLUTION NO. _____, DATED _____, 2021, AND THAT THE PLAT SHOWN HEREON HAS BEEN APPROVED FOR RECORDING IN THE JUNEAU RECORDING DISTRICT, STATE RECORDERS OFFICE AT ANCHORAGE

_____
CHAIRMAN OF THE PLANNING COMMISSION
CITY AND BOROUGH OF JUNEAU

DATED _____, 2021

ATTEST:

_____
MUNICIPAL CLERK
CITY AND BOROUGH OF JUNEAU

TYPICAL SECONDARY MONUMENT

(ESTABLISHED THIS SURVEY)

1" DIA. ORANGE SURVEY CAP ON
5/8" DIA. x 30" REBAR

RECOVERED MONUMENTS

3" BRASS CAP PRIMARY
GOOD CONDITION
1.5' BELOW GRADE

3" BRASS CAP PRIMARY
GOOD CONDITION
FLUSH WITH GRADE

EASEMENT NOTE

A BLANKET EASEMENT ON LOT 1 FOR UTILITIES, DRAINAGE, AND EGRESS AND INGRESS ACCESS TO ALL UNIT-LOTS IS DEDICATED BY THIS PLAT AS A PRIVATE EASEMENT FOR THE BENEFIT OF THE MEMBERS OF THUNDER MOUNTAIN VIEWS HOA, INC., AND SHALL BE MANAGED BY THE THUNDER MOUNTAIN VIEWS HOA, INC.

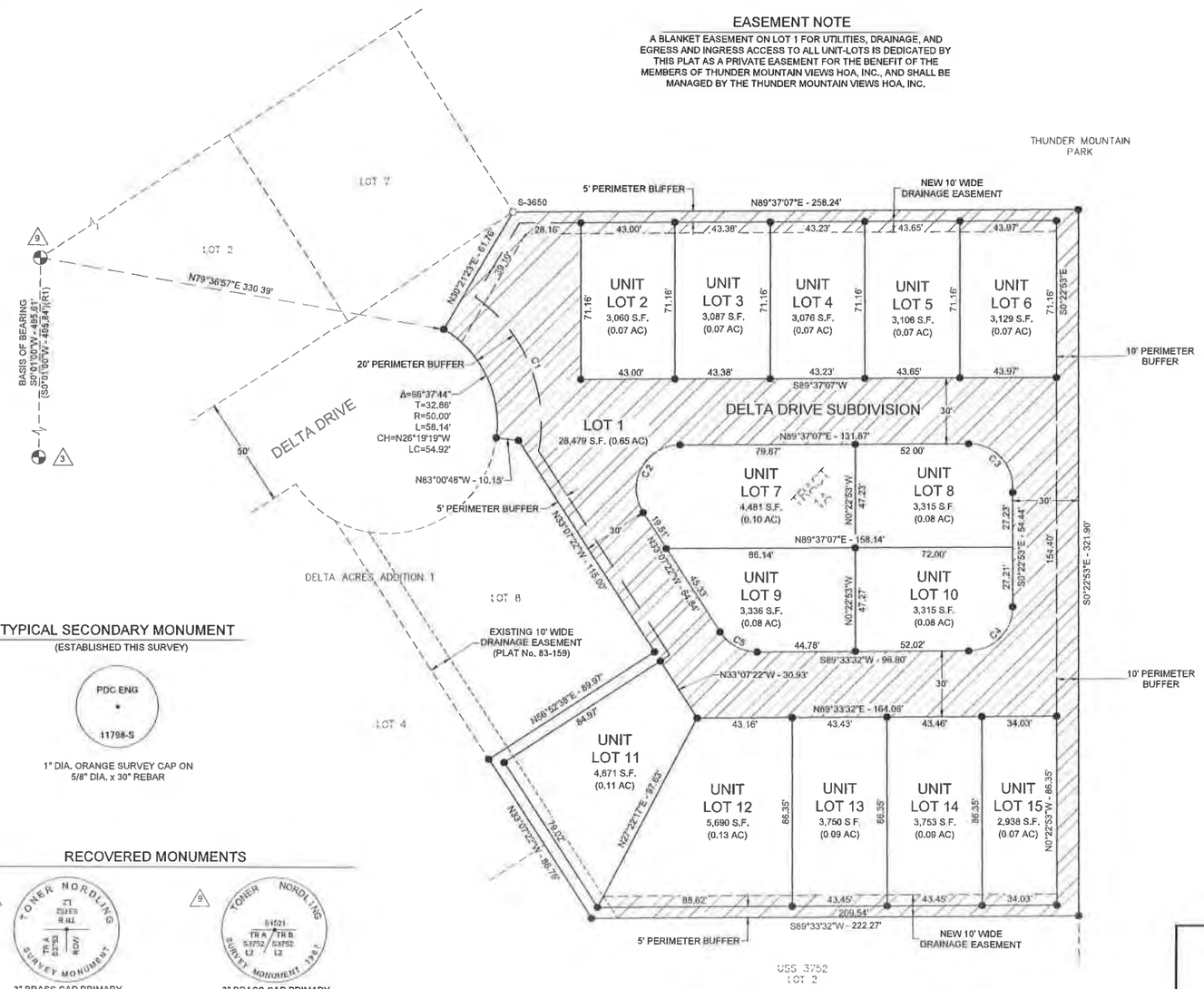

VICINITY MAP

SOURCE: CBJ PROPERTY ATLAS

SCALE: 1"= 500'

LEGEND

	PRIMARY MONUMENT (RECOVERED)
	SECONDARY MONUMENT (RECOVERED)
	SECONDARY MONUMENT (ESTABLISHED)
	SURVEYED LINE
	UNSURVEYED LINE
	EASEMENT LINE
	NEW EASEMENT LINE
(R1)	PLAT No. 73-17, JRD
(R2)	PLAT No. 92-18, JRD
	ACCESS, UTILITY & DRAINAGE EASEMENT
	PERIMETER BUFFER

SURVEYOR'S CERTIFICATE

I, CRAIG O. RANSON, IN MY CAPACITY AS A PROFESSIONAL LAND SURVEYOR REGISTERED IN THE STATE OF ALASKA, CERTIFY THAT THIS PLAT REPRESENTS THE SURVEY MADE BY ME OR UNDER MY DIRECT SUPERVISION, THAT THE ACCURACY OF THE SURVEY IS WITHIN THE LIMITS REQUIRED BY TITLE 49 OF THE CODE OF THE CITY AND BOROUGH OF JUNEAU, THAT ALL DIMENSIONS AND RELATIVE BEARINGS ARE CORRECT AND THAT MONUMENTS ARE SET IN PLACE AND NOTED UPON THIS PLAT AS PRESENTED.

DATE: 03/01/21

STATE OF ALASKA 49TH CRAIG O. RANSON LS 11798

SOURCE: N.O.A.A.
MAGNETIC DECLINATION 19°11'E
NOVEMBER 14, 2017 CHANGING BY
0°17' W/YEAR

CURVE TABLE					
CURVE #	LENGTH	DELTA	RADIUS	CHORD BEARING	CORD DISTANCE
C1	80.21'	65° 38' 55"	70.00'	N22° 43' 05"W	75.89'
C2	42.84'	122° 44' 29"	20.00'	S28° 14' 53"W	35.11'
C3	31.42'	90° 00' 00"	20.00'	N45° 22' 53"W	28.28'
C4	31.40'	89° 56' 25"	20.00'	N44° 35' 20"E	28.27'
C5	20.01'	57° 19' 06"	20.00'	S61° 46' 55"E	19.18'

30' 0 15' 30' 60'
SCALE: 1"=30'

PDC ENGINEERS
PLAN • DESIGN • CONSTRUCT
A BESSER COMPANY
9109 Mendenhall Mall Rd. Ste. 4, Juneau, AK 99801
907 780.6060 | AECC405

A PLAT OF
DELTA DRIVE SUBDIVISION
A SUBDIVISION OF
THUNDER MOUNTAIN PARK TRACT 1A
WITHIN U.S. SURVEY NO. 3752
WITHIN CITY AND BOROUGH OF JUNEAU, ALASKA
JUNEAU RECORDING DISTRICT

STATE RECORDER'S OFFICE AT ANCHORAGE

OWNER:
BICKNELL, INC.
P.O. BOX 33517
JUNEAU, AK 99803

SURVEYOR:
PDC ENGINEERS
9109 MENDENHALL MALL ROAD SUITE 4
JUNEAU, ALASKA 99801
(907) 780-6060

DATE: March 01,2021 SCALE: 1"=30' SHEET 1 OF 1 PDC PROJ. No. 20098JN

SMP20200004/ARP20200001

Invitation to Comment

On a proposal to be heard by the CBJ Planning Commission

Your Community, Your Voice

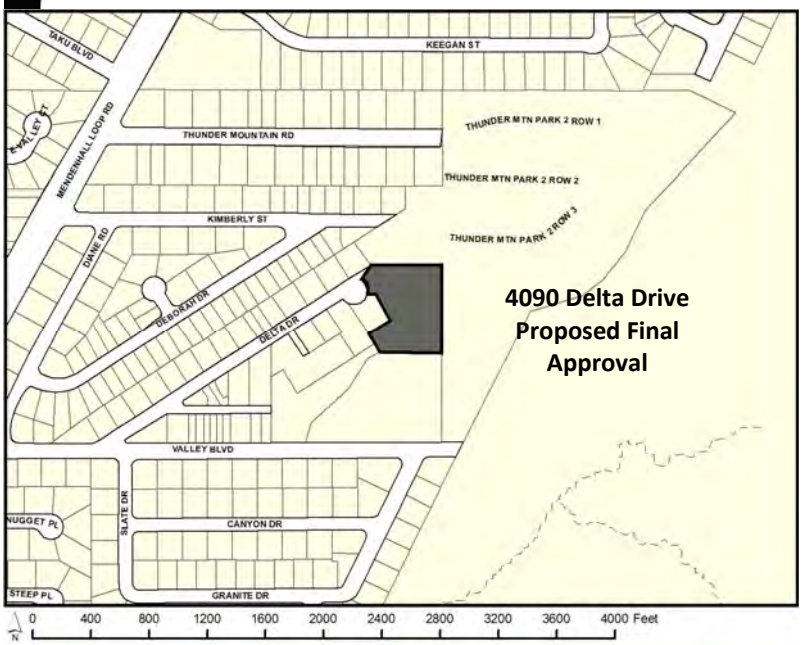

CITY AND BOROUGH OF JUNEAU
ALASKA'S CAPITAL CITY
COMMUNITY DEVELOPMENT

155 S. Seward Street Juneau, Alaska 99801

TO:

An application has been submitted for consideration and public hearing by the Planning Commission for **final subdivision approval for the Delta Drive Subdivision, an Alternative Residential Subdivision creating 14 unit lots and 1 parent lot** at **4090 Delta Drive** in a **D18 zone**.

TIMELINE

Staff Report expected to be posted **Monday, May 3, 2021** at **https://juneau.org/community-development/planning-commission.** Find hearing results, meeting minutes and more here as well.

Now through April 19

Comments received during this period will be sent to the Planner, **Laurel Christian**, to be included as an attachment in the staff report.

April 20 — noon, May 10

Comments received during this period will be sent to Commissioners to read in preparation for the hearing.

HEARING DATE & TIME: 7:00 pm, May 11, 2021

This virtual meeting will be by video and telephonic participation only. To join the Webinar, visit: https://juneau.zoom.us/j/91520615798. The Webinar ID is: 915 2061 5798. To join by telephone, call: +1 253 215 8782 or +1 346 248 7799 or +1 669 900 6833 or +1 301 715 8592 or +1 312 626 6799 or +1 929 436 2866 and enter the Webinar ID.

May 12

The results of the hearing will be posted online.

Phone: **(907)586-0715** ◆ Email: **pc_comments@juneau.org**
Mail: **Community Development, 155 S. Seward St, Juneau AK 99801**

Printed April 7, 2021

Case No.: SMF2021 0002; ARF2021 0001
Parcel No.: 5B2401620011
CBJ Parcel Viewer: http://epv.juneau.org

Laurel Christian

From: dblommer@bicknellinc.com
Sent: Monday, April 26, 2021 10:26 AM
To: Laurel Christian
Subject: Notice - Planning commission
Attachments: 20210422_124718.jpg

EXTERNAL E-MAIL: BE CAUTIOUS WHEN OPENING FILES OR FOLLOWING LINKS

Hi Laurel,

See attached photo of the sign at Delta. Let me know if you need anything else.

Thanks,
David

Laurel Christian

From: Laurel Christian
Sent: Monday, April 12, 2021 11:56 AM
To: 'rhondaward1@gmail.com'
Subject: RE: DRAINAGE COMMENTS DELTA DRIVE SUBDIVISION 4090 DELTA DRIVE

Hello Rhonda,

Thank you for reaching out. As part of the subdivision review, the developer is required to submit a drainage plan. Drainage for the new development will be routed to Delta Drive through new drainage swales and underground drains.

I hope this addresses your question/concern, please feel free to reach out with anything further.

Thank you,

Laurel Christian | Planner II
Community Development Department | City & Borough of Juneau, AK
Location: 230 S. Franklin Street | 4th Floor Marine View Building
Office: 907.586.0761

Fostering excellence in development for this generation and the next.

From: rhonda ward <rhondaward1@gmail.com>
Sent: Saturday, April 10, 2021 2:20 PM
To: PC_Comments <PC_Comments@juneau.org>
Subject: DRAINAGE COMMENTS DELTA DRIVE SUBDIVISION 4090 DELTA DRIVE

EXTERNAL E-MAIL: BE CAUTIOUS WHEN OPENING FILES OR FOLLOWING LINKS

Hello
I am concerned if proper drainage has been address to prevent flooding on the other side of the property closest to Thunder Mountain road. This section has a ditch that already has drainage issues. I hoping that this development will help improve that drainage.
RHonda Ward
3155978805

Planning Commission

(907) 586-0715
PC_Comments@juneau.org
www.juneau.org/plancomm
155 S. Seward Street • Juneau, AK 99801

PLANNING COMMISSION
NOTICE OF DECISION

Date: January 25, 2021
File No.: SMP2020 0004

Bicknell, Inc.
Attn: David Blommer
P.O. Box 33517
Juneau, AK 99803

Proposal:	Applicant proposes an Alternative Residential Subdivision creating 15 lots
Property Address:	4090 Delta Drive
Legal Description:	Thunder Mountain Park Tract 1A
Parcel Code No.:	5B2401620011
Hearing Date:	January 12, 2021

The Planning Commission, at its regular public meeting, adopted the analysis and findings listed in the attached memorandum dated December 29, 2020, and late file memorandum (provided January 12, 2021) with amendments and approved the Alternative Residential Subdivision Preliminary Plat for a 15 lot subdivision to be conducted as described in the project description and project drawings submitted with the application (and with the following conditions :)

1. Prior to approval of the final plat, Certification from the CBJ Treasurer is required showing that all real property taxes and special assessments levied against the property for the year of recording have been paid;
2. Prior to approval of a final plat, the applicant shall submit a complete set of construction plans for all required improvements to the Community Development Department for review by the Director of Engineering & Public Works for compliance with CBJ 49.35.140;

3. Prior to approval of the final plat, the developer shall submit a final drainage plan to be approved by CBJ Engineering & Public Works. This drainage plan must be prepared by an Alaskan licensed engineer in accordance with CBJ 49.35.510;
4. Prior to approval of the final plat, the applicant shall submit a revised preliminary plat with the following revisions:
    a. Add the following plat note:
        i. ACCESS TO LOTS SHALL BE VIA ACCESS EASEMENTS SHOWN ON THIS PLAT AND IS SUBJECT TO THE REQUIREMENTS IN THE "[private common driveway access, utility, and maintenance agreement – edit title as appropriate]" RECORDED WITH THIS SUBDIVSION.
    b. Show a five-foot perimeter buffer along the southwest lot line bordering Delta Acres Addition 1 Lot 8.
    c. Include bearing labels for:
        i. The eastern lot line of Lot 6
        ii. The lot lines between lots 7 and 8 and 9 and 10
    d. Per sheet C203, Grading Plan, a drainage easement should be added to the following locations:
        i. Eastern side of the development in the 10-foot perimeter buffer
        ii. Rear of Lot 11;
5. Prior to the issuance of the first temporary certificate of occupancy, the master water meter for the development shall be installed by the developer;
6. Prior to the issuance of the eleventh (11) temporary certificate of occupancy for the development, access to and within the development shall be paved.

Attachments: December 29, 2020, memorandum from Laurel Christian, Community Development, to the CBJ Planning Commission regarding ARP2020 0001; and memorandum from Jill Maclean, Director, AICP, Community Development regarding ARP2020 0001 and SMP2020 0004 provided January 12, 2021.

This Notice of Decision does not authorize any construction. Prior to starting any project, it is the applicant's responsibility to obtain the required building permits.

This Notice of Decision constitutes a final decision of the CBJ Planning Commission. Appeals must be brought to the CBJ Assembly in accordance to CBJ 01.50.030. Appeals must be filed by 4:30 P.M. on the day twenty days from the date the decision is filed with the City Clerk, pursuant to CBJ 01.50.030 (c). Any

action by the applicant in reliance on the decision of the Planning Commission shall be at the risk that the decision may be reversed on appeal (CBJ 49.20.120).

Effective Date: The permit is effective upon approval by the Commission, January 12, 2021.

Expiration Date: The permit will expire five (5) years after the effective date, or January 12, 2026, if no Building Permit has been issued and substantial construction progress has not been made in accordance with the plans for which the subdivision permit was authorized or no final plat has been approved. Application for permit extension must be submitted thirty days prior to the expiration date.

Michael LeVine, Chair Planning Commission	January 26, 2021 Date
Filed With City Clerk	January 26, 2021 Date

cc: Plan Review

NOTE: The Americans with Disabilities Act (ADA) is a federal civil rights law that may affect this subdivision. ADA regulations have access requirements above and beyond CBJ - adopted regulations. Owners and designers are responsible for compliance with ADA. Contact an ADA - trained architect or other ADA trained personnel with questions about the ADA: Department of Justice (202) 272-5434, or fax (202) 272-5447, NW Disability Business Technical Center (800) 949-4232, or fax (360) 438-3208.

CITY AND BOROUGH OF JUNEAU
ALASKA'S CAPITAL CITY
COMMUNITY DEVELOPMENT

(907) 586-0715
CDD_Admin@juneau.org
www.juneau.org/CDD
155 S. Seward Street • Juneau, AK 99801

DATE: December 29, 2020

TO: Michael LeVine, Chair, Planning Commission

BY: Laurel Christian, Planner II

THROUGH: Jill Maclean, Director, AICP

PROPOSAL: Preliminary Plat Approval for the Delta Drive Subdivision, an Alternative Residential Subdivision creating 14 unit-lots and 1 parent lot

STAFF RECOMMENDATION: Approval with conditions

KEY CONSIDERATIONS FOR REVIEW:

- 14 lots will be for single-family dwellings.
- The remaining parent lot will contain the perimeter buffer, privately maintained access road, and other common amenities.
- This approval is subject to ARP20200001.

GENERAL INFORMATION	
Property Owner	Bicknell, Inc.
Applicant	Bicknell, Inc.
Property Address	4090 Delta Drive
Legal Description	Thunder Mountain Park Tract 1A
Parcel Number	5B2401620011
Zoning	D18 Multi-family Residential
Lot Size	79,189 sq. ft.
Water/Sewer	Public
Access	Delta Drive
Existing Land Use	Vacant
Associated Applications	ARP20200001

ALTERNATIVE ACTIONS:

1. **Amend:** require additional conditions, or delete or modify the recommended conditions.
2. **Deny:** deny the permit and adopt new findings for items 1-5 below that support the denial.
3. **Continue:** to a future meeting date if determined that additional information or analysis is needed to make a decision, or if additional testimony is warranted.

ASSEMBLY ACTION REQUIRED:

Assembly action is not required for this permit.

STANDARD OF REVIEW:

- Quasi-judicial decision
- Requires five (5) affirmative votes for approval
- Code Provisions:
  - 49.15.402
  - 49.15.411
  - 49.35
  - 49.80

The Commission shall hear and decide the case per *49.15.400(a) - Purpose and applicability.* *The purpose of this article is to facilitate the subdivision of land to promote the public health, safety, and general welfare of the citizens of the CBJ in accordance with the Comprehensive Plan of the City and Borough of Juneau, Alaska.*

And per 49.15.402(a) *A major subdivision permit is required for subdivisions resulting in 14 or more lots.*

SITE FEATURES AND ZONING

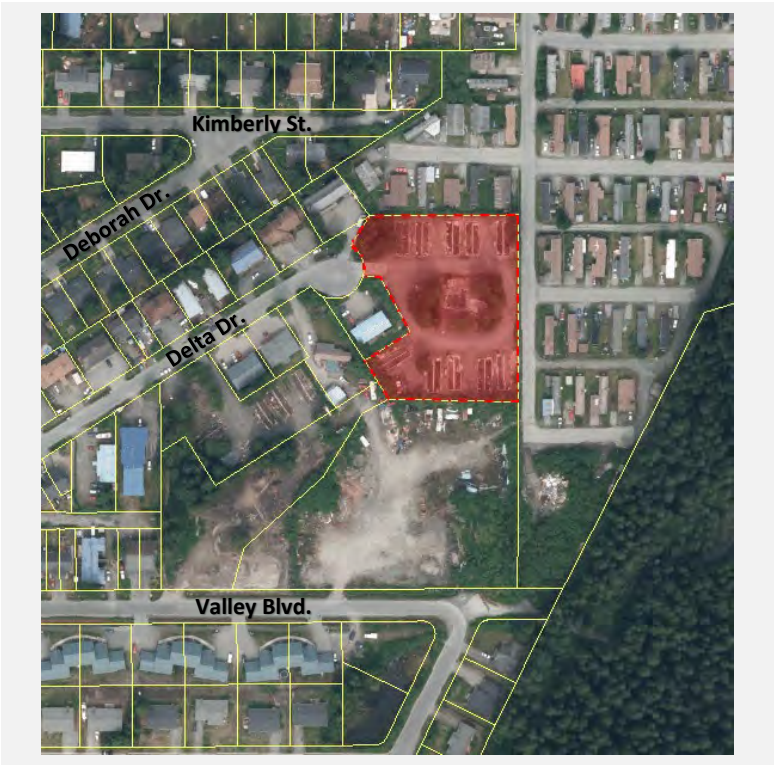

SURROUNDING ZONING AND LAND USES	
North (D18)	Thunder Mountain Mobile Home Park
South (D18)	Vacant
East (D18)	Thunder Mountain Mobile Home Park
West (D18)	Multi-family four-plex

SITE FEATURES	
Anadromous	None
Flood Zone	None
Hazard	None
Hillside	None
Wetlands	None
Parking District	None
Historic District	None
Overlay Districts	None

BACKGROUND INFORMATION

Project Description – The applicant requests a preliminary plat approval for the Delta Drive Subdivision, an Alternative Residential Subdivision (ARS) creating 15 lots. The proposal would create 14 unit-lots for single-family dwellings and one (1) parent-lot containing the perimeter buffer, privately maintained access road, and other common amenities (15 lots total).

A project narrative can be found in Attachment A and the preliminary plat can be found in Attachment B.

Background – Background information includes the process for approval, and relevant development history for the lot. Information on the ARS design may be found in the staff report for ARP20200001.

ARS Process

The ARS process requires two preliminary applications, both of which are being presented at the same Planning Commission meeting.

- This application (SMP20200004) is for approval of the preliminary *plat* for the ARS. The plat is reviewed for compliance with subdivision code [CBJ 49.15.402].
- Another separate (ARP20200001) is for review of the preliminary *plan* for the ARS. This application must be acted on first. The plan is reviewed for compliance with applicable ARS code and design guidelines [CBJ 49.15.900].

If the preliminary plan and preliminary plat are approved, the developer may for apply for review of the ARS final plan and ARS final plat. These two applications may be presented at the same public meeting, or separately. The

purpose of a second review by the Commission is to ensure the final plan conforms with the approved preliminary plan and that any conditions of approval have been met.

Development History

The table below summarizes relevant history for the lot and proposed development.

Item	Summary
Plat History	In 1992, the lot was platted as an expansion of the Thunder Mountain Park (plat no. 92-18). No restrictive plat notes exist for the lot.
Land Use Cases	In 1992, a conditional use permit (CUP) was issued to expand the Thunder Mountain Mobile Home park onto the lot (USE-CU92-01). In 2013, another CUP was issued for a 12-unit apartment building on the lot; this permit expired (USE20130017). The lot is currently vacant.
Building Permits	In 1992, a building permit was issued to place 10 modular homes on permanent concrete foundations (BLD-0747301). In 2013, a demolition permit was issued to remove the modular homes (DMO20130007). The lot currently contains the 10 concrete foundations with no modular structures. The applicant intends to repurpose the foundations.

ANALYSIS

Phasing – The proposed ARS will not be phased.

Minimum Lot Dimensions – Typically, the D18 zoning district requires a 5,000 square foot minimum lot size for a standard lot. Minimum lot dimensional requirements for the unit-lots created through this ARS are waived [49.15.920(c)]. The ARS allows for *unit-lot residential communities in which all or some of the lots do not substantially conform to the minimum requirements for a traditional subdivided lot [49.15.900].*

The unit-lots created through this subdivision range from approximately 2,000 square feet to 5,000 square feet. The parent-lot measures approximately 28,000 square feet.

Density – Per 49.15.920(e)(1) *The number of dwelling units permitted in the development shall be calculated by multiplying the maximum number of dwelling units per gross acre permitted in the underlying zoning district by the number of acres in the alternative residential subdivision and rounding to the nearest whole number.*

Maximum Dwelling Units Per Acre	Parent Lot Size	Maximum Density	Number of Dwelling Units Proposed
18	79,189 sq. ft. (1.8179 acres)	33 dwelling units	14

Maximum density is not exceeded, as demonstrated in the table above. The applicant has not requested a density bonus. Each unit-lot could accommodate one single-family dwelling. Lot 12 exceeds the minimum lot size for the zoning district and could accommodate a single-family dwelling and accessory apartment [49.15.920(m)]. The following plat note has been added:

Plat Note: AT TIME OF RECORDING, LOTS 2 THROUGH 11 AND 13 THROUGH 15 ARE LIMITED TO ONE SINGLE FAMILY DWELLING. LOT 12 MAY BE PERMITTED ONE SINGLE FAMILY DWELLING AND ONE ACCESSORY APARTMENT. SEE CBJ 49.15 ARTICLE IX FOR CURRENT REGULATIONS.

Habitat – There are no known anadromous streams or wetlands on the lot.

Hazard Zones - There are no hazard zones on the lot.

LOT DESIGN

Alternative Residential Subdivision Plat Notes – The lots created through this subdivision are part of an ARS. To ensure compliance with CBJ 49.15 Article 9, the following plat notes have been added:

Plat Note: THE LOTS CREATED THROUGH THIS SUBDIVISION ARE AN ALTERNATIVE RESIDENTIAL SUBDIVISION. AT TIME OF PLAT RECORDING DEVELOPMENT OF LOTS, INCLUDING FURTHER SUBDIVISION OR USE, IS SUBJECT TO CBJ 49.15 ARTICLE IX. SEE CITY AND BOROUGH OF JUNEAU LAND USE CODE FOR CURRENT REGULATIONS.

Plat Note: THERE SHALL BE NO DISTURBANCE OR DEVELOPMENT WITHIN THE PERIMETER BUFFER SHOWN ON THIS PLAT, AS REQUIRED BY CBJ 49.15.920(j).

TRAFFIC

Traffic – According to CBJ 49.40.300(a)(2) a traffic impact analysis is not required; the development is not anticipated to generate more than 250 Average Daily Trips (ADTs).

Use	Units	Trips Generated	Total Trips
Single-family Residential	14	9.52 per dwelling	**133.28**

ACCESS AND PUBLIC IMPROVEMENTS

Access – Per 49.35.250(a), staff has determined that the primary access to the subdivision is Delta Drive. Within the ARS, the development will be served by a privately maintained road extending from Delta Drive. This is allowed per 49.15.920(f), as discussed in the staff report for ARP20200001. An easement for utilities, drainage, and driveway access on the parent lot is dedicated by the plat.

It is recommended the following plat note be added to the plat:

Plat note: ACCESS TO LOTS SHALL BE VIA ACCESS EASEMENTS SHOWN ON THIS PLAT AND IS SUBJECT TO THE REQUIREMENTS IN THE "[private common driveway access, utility, and maintenance agreement – edit title as appropriate**]" RECORDED WITH THIS SUBDIVSION.**

49.35.240 Table of Roadway Construction Standards – Delta Drive is a CBJ right-of-way constructed to CBJ standards and maintained by CBJ. The Capital Improvement Program (CIP) has designated funds for Fiscal Year 2020/2021 to reconstruct and improve Delta Drive. The plans for the reconstruction include new water and sewer mains, new drainage systems, resurfacing the street, and the addition of sidewalks on one side of the street. These improvements are planned to be completed by CBJ during the summer of 2021 (CSP20200009). Additional improvements by the developer to Delta Drive are not required.

Within the ARS, the privately maintained access road must be 20 feet in width and paved, and installed by the developer. The development is anticipated to generate 133 ADTs. A 20-foot wide paved roadway is adequate for the trips generated according to the Table of Roadway Construction Standards, see below [49.35.240].

Condition: Prior to the issuance of the first temporary certificate of occupancy, access to and within the development shall be paved.

49.35.240 Table of roadway construction standards excerpt:

ADTs	***TIA***	***Sidewalks***	***Travel Way Width***	***Street Lights***	***ROW Width***	***Paved***	***Publically Maintained***
0 to 211	*No*	*Not required*	*20 ft.*	*At intersection of subdivision streets and external street system.*	*60 ft. Public ROW**	*No, if outside the urban service area*	*No*

*49.15.920(f) allows for a privately maintained access road within the ARS.

Street Lighting – Street lighting is not required within the ARS. Delta Drive currently has street lighting.

Pedestrian Access – Delta Drive currently does not have sidewalks; however, sidewalks on one side of the street are planned through the CIP reconstruction project (CSP20200009). The access road within the ARS is not required to have sidewalks, according to the Table of Roadway Construction Standards [49.35.240].

Utilities – CBJ 49.15.920(g) requires that a master meter is installed on the parent-lot, and each unit-lot must be connected to water and sewer through the master meter. The parent lot is currently connected to public water and sewer. The applicant has submitted preliminary construction drawings showing each new unit-lot will be connected to public utilities through a master meter on the parent lot (Attachment C). The applicant has also submitted a preliminary water-line memo (Attachment D).

Once the preliminary plat is approved, the applicant is required to submit final construction drawings for review by CBJ Engineering & Public Works (E&PW). Because the parent-lot is currently connected to public utilities, additional work is not required before the applicant can receive final plat approval. It will be the responsibility of the Homeowners Association (HOA) to provide water and sewer to each unit-lot prior to the issuance of a Certificate of Occupancy or Temporary Certificate of Occupancy for each structure.

CBJ E&PW has reviewed the preliminary construction drawings and water line memo and finds that the proposed improvements conform to the requirements of Title 49 and can feasibility be constructed (Attachment F).

Condition: Prior to the issuance of the first temporary certificate of occupancy, each dwelling unit shall be connected to public sewer and water, and a master meter for water shall be installed by the developer.

Condition: Prior to approval of a final plat, the applicant shall submit a complete set of construction plans for all required improvements to the Community Development Department for review by the director of Engineering & Public Works for compliance with CBJ 49.35.140.

Plat Note: DOMESTIC WATER AND SANITARY SEWER DISPOSAL PROVIDED BY THE CITY AND BOROUGH OF JUNEAU PUBLIC UTILITIES.

Drainage – A preliminary drainage report and plan has been submitted, see Attachment C and E. The preliminary drainage plan demonstrates the drainage will be collected into drainage swales and underground storm drains, which connect to the existing drainage systems in Delta Drive. CBJ E&PW has reviewed the preliminary drainage report and construction drawings and finds that the preliminary drainage plan conforms to drainage and water quality requirements (Attachment F).

> **Condition: Prior to approval of the final plat, the developer shall submit a final drainage plan to be approved by CBJ Engineering & Public Works. This drainage plan must be prepared by an Alaskan licensed engineer in accordance with CBJ 49.35.510.**

Fire Code Improvements – According to the CBJ Fire Marshall, the proposed 20-foot-wide access road is adequate for emergency service response. No fire turnaround is required since the access road is a connected loop.

AGENCY REVIEW

CDD conducted an agency review comment period between October 15 and October 31, 2020. Comments from Engineering and Public works and Capital City Fire and Rescue are incorporated into this report. No additional comments were received.

PUBLIC COMMENTS

CDD conducted a public comment period between December 7 and December 21, 2020. Public notice was mailed to property owners within 500 feet of the subject parcel. A public notice sign was also posted on-site two weeks prior to the scheduled hearing. At time of writing this staff report, no public comments were received.

FINDINGS

Major Subdivision Preliminary Plat Approval Criteria - Per CBJ 49.15.402(c)(4), the director makes the following findings on the proposed development:

1. ***Does the preliminary plat comply with CBJ 49.15.411?***

   Analysis: No additional analysis needed.

   Finding: Yes. With recommended conditions listed below, the preliminary plat complies with preliminary platting requirements listed in CBJ 49.15.411.

2. ***Will applicable subdivision development standards be met, or can reasonably be met with conditions?***

   Analysis: The applicant is required to install a privately maintained access road, utilities, and drainage systems.

   Finding: Yes. With recommended conditions, applicable subdivision development standards can be reasonably met.

3. ***Will the proposed subdivision provide suitable building sites for the zoning district?***

   Analysis: Minimum lot dimensional requirements for the unit-lots created through this ARS are waived [49.15.920(c)]; the applicant has demonstrated adequate building sites are provided for an ARS in the D18 zoning district.

   Finding: Yes. The proposed subdivision provides building sites suitable for the D18 zoning district.

4. Will the proposed street names be unique or continuations of existing streets?

Analysis: No new street names are proposed. The CDD GIS Analyst will assign addresses from Delta Drive; the privately maintained street functions as an extension of Delta Drive.

Finding: Not applicable.

5. Has the director of Engineering and Public Works reviewed the application and determined that:

(i) The subdivision can be constructed to conform to applicable drainage and water quality requirements;

(ii) The streets, pioneer paths, and pedestrian ways as proposed accommodate anticipated traffic, align with, and, where appropriate, connect with streets and pedestrian ways serving adjacent properties;

(iii) Any proposed improvements conform to the requirements of this Title 49 and can be feasibly constructed; and,

(iv) Where public sewer is not required, the applicant has shown that soils are suitable for individual on-lot wastewater treatments and disposal or has shown the feasibility of alternative methods of wastewater disposal and treatment.

Analysis: CBJ E&PW has submitted a memorandum that demonstrates the above criteria can reasonably be met (Attachment F).

Finding: Yes. CBJ E&PW has reviewed the proposed subdivision application and supplemental materials, and finds the above criteria can be met.

RECOMMENDATION

Staff recommends the Planning Commission adopt the Director's analysis and findings and **APPROVE** the preliminary plat for the Delta Drive Subdivision, an Alternative Residential Subdivision creating 14 unit-lots and one (1) parent lot. This permit would allow the applicant to submit for the final plat.

This approval is subject to the following conditions:

1. Prior to approval of the final plat, Certification from the CBJ Treasurer is required showing that all real property taxes and special assessments levied against the property for the year of recording have been paid.
2. Prior to approval of a final plat, the applicant shall submit a complete set of construction plans for all required improvements to the Community Development Department for review by the director of E&PW for compliance with CBJ 49.35.140.
3. Prior to approval of the final plat, the developer shall submit a final drainage plan to be approved by CBJ Engineering & Public Works. This drainage plan must be prepared by an Alaskan licensed engineer in accordance with CBJ 49.35.510.
4. Prior to approval of the final plat, the applicant shall submit a revised preliminary plat with the following revisions:
    a. Add the following plat note:

i. ACCESS TO LOTS SHALL BE VIA ACCESS EASEMENTS SHOWN ON THIS PLAT AND IS SUBJECT TO THE REQUIREMENTS IN THE "[private common driveway access, utility, and maintenance agreement – edit title as appropriate]" RECORDED WITH THIS SUBDIVSION.

b. Show a five-foot perimeter buffer along the southwest lot line bordering Delta Acres Addition 1 Lot 8.

c. Include bearing labels for:
   i. The eastern lot line of Lot 6
   ii. The lot lines between lots 7 and 8 and 9 and 10

d. Per sheet C203, Grading Plan, a drainage easement should be added to the following locations:
   i. Eastern side of the development in the 10-foot perimeter buffer
   ii. Rear of Lot 11

5. Prior to the issuance of the first temporary certificate of occupancy, each dwelling unit shall be connected to public sewer and water, and a master meter for water shall be installed by the developer.
6. Prior to the issuance of the first temporary certificate of occupancy for the development, access to and within the development shall be paved.

STAFF REPORT ATTACHMENTS

Item	Description
Attachment A	Application Packet
Attachment B	Preliminary Plat and Closure Report
Attachment C	Preliminary Construction Drawings
Attachment D	Preliminary Water Memo
Attachment E	Preliminary Drainage Report
Attachment F	Memorandum from CBJ Engineering & Public Works
Attachment G	Abutters Notice and Public Notice Sign Photo

CITY AND BOROUGH OF JUNEAU
ALASKA'S CAPITAL CITY
COMMUNITY DEVELOPMENT

DEVELOPMENT PERMIT APPLICATION

NOTE: Development Permit Application forms must accompany all other Community Development Department land use applications.

To be completed by Applicant

PROPERTY LOCATION

Physical Address
4090 Delta Drive, Juneau, AK 99801

Legal Description(s) (Subdivision, Survey, Block, Tract, Lot)
Thunder Mountain Park TR 1A

Parcel Number(s)
5B2401620011

☐ This property located in the downtown historic district
☐ This property located in a mapped hazard area, if so, which _____

LANDOWNER / LESSEE

Property Owner	Contact Person
Bicknell, Inc.	David Blommer

Mailing Address	Phone Number(s)
P.O. Box 33517	
E-mail Address: dblommer@bicknellinc.com	907-789-5727

LANDOWNER/ LESSEE CONSENT Required for Planning Permits, not needed on Building/ Engineering Permits

I am (we are) the owner(s)or lessee(s) of the property subject to this application and I (we) consent as follows:

A. This application for a land use or activity review for development on my (our) property is made with my complete understanding and permission.
B. I (we) grant permission for officials and employees of the City and Borough of Juneau to inspect my property as needed for purposes of this application.

X _____ Landowner/Lessee Signature — Date 10/8/20

X _____ Landowner/Lessee Signature — Date _____

NOTICE: The City and Borough of Juneau staff may need access to the subject property during regular business hours and will attempt to contact the landowner in addition to the formal consent given above. Further, members of the Planning Commission may visit the property before the scheduled public hearing date.

APPLICANT (if the same as owner, enter "SAME")

Applicant	Contact Person
SAME	SAME

Mailing Address	Phone Number(s)
SAME	
E-mail Address: SAME	

X _____ Applicant's Signature — Date of Application _____

----------DEPARTMENT USE ONLY BELOW THIS LINE----------

RECEIVED
OCT 12 2020
PERMIT CENTER/CDD

Intake Initials
LEC

This form and all documents associated with it are public record once submitted.

INCOMPLETE APPLICATIONS WILL NOT BE ACCEPTED

For assistance filling out this form, contact the Permit Center at 586-0770.

Case Number	Date Received
SMP20200004	10/12/20

CITY AND BOROUGH OF JUNEAU
ALASKA'S CAPITAL CITY
COMMUNITY DEVELOPMENT

SUBDIVISION AND DEVELOPMENT PLAN APPLICATION

See subdivision hand-outs for more information regarding the permitting process and the materials required for a complete application.

NOTE: Must be accompanied by a DEVELOPMENT PERMIT APPLICATION form.

To be completed by Applicant

PROJECT SUMMARY

An alternative residential subdivision (ARS) of Thunder Mountain Park TR 1A into Delta Drive Subdivision comprised of 15 unit lots and 1 parent lot.

Number of Existing Parcels 1 Total Land Area 1.82 acres Number of Resulting Parcels 16

HAS THE PARCEL BEEN CREATED BY A MINOR SUBDIVISION IN THE PRECEDING 24 MONTHS

○ NO ○ YES Case Number _____

TYPE OF SUBDIVISION OR PLATTING APPROVAL REQUESTED

MINOR DEVELOPMENT
(changing or creating 13 or fewer lots)

- ○ Preliminary Plat (MIP)
- ○ Final Plat (MIF)
- ○ Panhandle Subdivision
- ○ Accretion Survey
- ○ Boundary Adjustment
- ○ Lot Consolidation (SLC)
- ○ Bungalow Lot Subdivision
- ○ Common Wall/Zero Lot Subdivision
- ○ Other _____

MAJOR DEVELOPMENT
(changing or creating 14 or more lots)

- ⊗ Preliminary Plat (SMP)
- ○ Final Plat (SMF)
- ○ Preliminary Development Plan – PUD (PDP)
- ○ Final Development Plan – PUD (PDF)
- ○ Development Plan – ARS (ARP)
- ○ Development Plan – ARS (ARF)
- ○ Bungalow Lot Subdivision
- ○ Common Wall/Zero Lot Subdivision
- ○ Other _____

ALL REQUIRED DOCUMENTS ATTACHED

- ☑ **Pre-application conference notes**
- ☑ **Narrative including:**
  - ☑ Legal description(s) of property to be subdivided
  - ☑ Existing structures on the land
  - ☑ Zoning district
  - ☑ Density
  - ☑ Access
  - ☑ Current and proposed use of any structures
  - ☑ Utilities available
  - ☑ Unique characteristics of the land or structure(s)
- ☑ **Preliminary Plat checklist**

----------DEPARTMENT USE ONLY BELOW THIS LINE----------

SUBDIVISION/PLATTING FEES	Fees	Check No.	Receipt	Date
Application Fees	$ 1760.00			
Public Notice sign ~~Admin. of Guarantee~~	$ 150.00	Fence Deposit		
Adjustment	$			
Total Fee	$ 1910.00			

major sub: $110 per lot x 16 lots

RECEIVED
OCT 12 2020
PERMIT CENTER/CDD

For assistance filling out this form, contact the Permit Center at 586-0770.

INCOMPLETE APPLICATIONS WILL NOT BE ACCEPTED

Case Number	Date Received
SMP20200004	10/12/20 LEC

PDC ENGINEERS

PLAN • DESIGN • CONSTRUCT

October 9, 2020

Laurel Christian, Planner II
City and Borough of Juneau
Community Development Department
155 S. Seward St.
Juneau, AK 99801

SUBJECT: Delta Drive Subdivision - Alternative Residential Subdivision
Project Narrative – PDC Project No. 20098JN

Dear Laurel;

On behalf of our client Bicknell Inc., PDC Engineers (PDC) is submitting this project narrative as part of the Delta Drive Subdivision Alternative Residential Subdivision (ARS) application. The property to be subdivided under the CBJ ARS code has a legal description of Thunder Mountain Park TR 1A with a land area of 79,189 square feet. Currently there are no dwelling structures on the property. Ten (10) existing concrete foundations exist on the property from where previous modular homes were located that have since been removed.

CBJ Zoning - The property is zoned D-18 Multifamily with an allowable density of 18 units per acre. The proposed use of the structures to be developed within the ARS will be residential and will meet the permissible uses as outlined for their zoning district and in the ARS code. The surrounding neighborhood is similarly zoned D-18 and is made up of single family and multi-family residences. The proposed development will be in harmony with the surrounding neighborhood.

Access - The existing parcel is accessed from the cul-de-sac at the end of Delta Drive, a CBJ owned and maintained paved roadway.

Utilities – CBJ public water and sanitary sewer utilities currently service the property. An existing 2-inch water line coming from the end of the existing 6-inch water line in Delta Drive supplies water to this property. Individual ¾" water services are located from the 2-inch line within the property serving the original 10 modular homes. A 6-inch PVC sanitary sewer line exists within the property acting as the sewer collector. This 6-inch sewer pipe connects to the CBJ sewer main located in the Delta Drive cul-de-sac. Individual 4-inch PVC sewer services coming from the building foundations connect to the 6-inch sewer. Under the CBJ Delta Drive Reconstruction project scheduled for construction in the Spring/Summer of 2021, new water and sanitary sewer utilities will be provided to the lot line of this property. An 8-inch PVC sewer service will be provided and an 8-inch HDPE water line. The Delta Drive Subdivision project will connect to these new services and extend into the subdivision. The existing sewer system has been found to be in good condition and will continue to be reused. Lots which previously did not have a 4-inch

Anchorage | Fairbanks | Juneau | Palmer | Soldotna
9109 Mendenhall Mall Road, Suite 4, Juneau, Alaska 99801
907.780.6060
www.PDCENG.com

RECEIVED
OCT 12 2020
PERMIT CENTER/CUD

sewer service will have a new ones installed. The subdivision has an existing 2" Poly water main serving the existing lots. PDC water system analysis (attached) indicates that the existing 2" water service can supply adequate flow and pressure to 7 dwelling units. There are two 2" Poly water line branches that will connect to the new 8" HDPE line. The existing 2" poly water line will be flushed, disinfected and pressure testing in compliance with CBJ Standards for domestic water supply. Existing ¾" water services will be used or new 1-inch Poly water services will be installed. A master water meter with vault structure will be installed prior to service lines.

Drainage – Surface storm water will be collected in drainage swales on the perimeter and interior lots of the property. The drainage system will involve construction of drainage swales, underground storm drain pipe and underdrain system to safely route the drainage to the existing Delta Drive drainage system which is planned for reconstruction in Spring/Summer 2021 by CBJ. As the designers for CBJ on the Delta Drive Reconstruction project, the storm drain improvements have been designed to accommodate the Delta Drive Subdivision storm drainage. There are two locations where storm drainage will discharge to Delta Drive, both of these locations have pipe sized at 12" diameter. Lots 11-15 will have a drainage swale near the rear of the property and then transition to an 8" underdrain in an existing 10' drainage easement that goes to a new culvert inlet being installed under the Delta Drive Reconstruction project. Lots 7-10 (new foundations) will be graded to drain to a drainage swale in the front of the lots where storm drainage will be collected and routed underground through a 12" drain pipe to the discharge location at the new culvert on Delta Drive. Lots 1-6 will have a perimeter drainage swale at the rear of the property that is graded to drain to the new culvert being installed under the CBJ Delta Drive Reconstruction project.

Parking and Circulation– Each lot will have two parking spaces as shown in the site plan. The existing gravel roadway will be reconstructed to accommodate a 20' wide paved access road through the property. This paved roadway will allow for safe and convenient emergency fire vehicle access throughout the subdivision.

Buffer/Setback – A perimeter buffer has been shown on the site plan with a new wooden fence located at the property line for screening and privacy. Buffers match the required setbacks for this zoning district.

Vegetative Cover – The parent lot has roughly 46% vegetative cover.

Lighting – Lighting will be installed on the individual structures.

Mailbox, Garbage and Snow Storage – CBJ Standard Mailboxes have been shown on Lot 1 to allow for each lot to have US Postal mail delivery. Two garbage dumpsters have been shown on Lot 1 to allow for refuse to be placed from each lot. Snow storage has been shown on Lot 1.

Should you have any questions or require any additional information, please do not hesitate to contact me at your convenience.

Sincerely,

J Mark Pusich

J. Mark Pusich, PE
Principal | Civil/Structural Engineer
PDC Engineers

Attachments: ARS Application: CBJ Development Application, ARS Subdivision Preliminary Plat, Lot Closure Comps, Subdivision Application, Preliminary Plat Checklist, Pre-App meeting minutes, Construction Improvement Drawings

CITY AND BOROUGH OF JUNEAU
ALASKA'S CAPITAL CITY
COMMUNITY DEVELOPMENT

(907) 586-0715
CDD_Admin@juneau.org
www.juneau.org/CDD
155 S. Seward Street • Juneau, AK 99801

Delta Drive Alternative Residential Subdivision

Case Number: PAC20200026
Applicant: Spike Bicknell & David Blommer

Property Owner: Delta Park LLC

Property Address: 4090 Delta Drive

Parcel Code Number: 5B2401620011

Site Size: 79,189 Square Feet

Zoning: D-18

Existing Land Use: Manufactured Homes

Conference Date:	4/29/20
Report Issued:	**05/06/20**
List of Attendees	

Note: Copies of the Pre-Application Conference Report will be emailed, instead of mailed, to participants who have provided their email address below.

Name	Title	Email address
David Blommer	Applicant	dblommer@bicknellinc.com
Laurel Christian	Planning	Laurel.christian@juneau.org
Kyle Paw	Permit staff	Kyle.paw@juneau.org
Autumn Sapp	General Engineering	Autumn.Sapp@juneau.org
Mark Pusich	PDC	MarkPusich@pdceng.com

Conference Summary

Questions/issues/agreements identified at the conference that weren't identified in the attached reports. The following is a list of issues, comments and proposed actions, and requested technical submittal items that were discussed at the pre-application conference.

The Alternative Residential Subdivision (ARS) requires a two-step approval process. The ARS preliminary plan is reviewed the and then then ARS final plan is reviewed. A major subdivision application is also required. The applicant may apply for the preliminary ARS plan and preliminary major subdivision plat at the same time.

The preliminary ARS plan is reviewed through the conditional use permit process with additional requirements found in the ARS section of code. The major subdivision plat is reviewed for platting requirements. The ARS section of code is attached to this report, approval criteria are highlighted.

Planning Division

1. **Zoning** – D18 Zoning District. There is no minimum lot size for the unit lots, however; you should demonstrate on the plan their size, and show how large the parent parcel is. CBJ 49.80 Definitions for Parent Lot and Unit Lot:

   Parent lot means the original lot and the residual area from which unit-lots are created through an alternative residential subdivision.

   Unit-lot means any lot, site, parcel, unit-site, and similar geographically defined property that is created through an alternative residential subdivision and that is substantially smaller than the minimum lot size required for the zoning district

2. **Setback/buffer** – There are no setbacks for the unit lots. A perimeter buffer is required in lieu of the setback requirements of this title on the parent lot. The buffer shall not be less than the setbacks required for the zoning district. Setbacks for the D18 zoning district are: Front: 20'; Rear: 10'; Side: 5'; Street side:13'

   a. The commission may enlarge the required buffer to up to 25 feet.

   b. The buffer shall be vegetated unless the commission requires non-vegetated screening. A buffer may include fencing, natural berm, or other similar features.

   c. No parking areas, dwelling units, unit-lots, or permissible uses may be located within the perimeter buffer. Access to the development may cross a portion of the buffer.

3. **Height** – 35' primary uses; 25' accessory uses

4. **Parking & Circulation** – Each single-family dwelling requires 2 parking spaces. Residential parking lots with more than 10 parking spaces but fewer than 25 parking spaces require 1 ADA van accessible parking space.

   a. Parking can be either on the unit lots or on the parent lot. On the ARS plan, parking areas should be shown.

5. **Access** – Access to the ARS must be publically maintained (Delta Drive is a publically maintained right-of-way). Access within the ARS must be located completely on the parent lot, be paved, and meet emergency service access requirements.

6. **Lot Coverage** – There is no maximum lot coverage for the unit lots, maximum lot coverage applies to the parent lot. The maximum lot coverage is 50%.
7. **Vegetative Coverage** – There is a minimum vegetative cover requirement for the parent lot. In the D18 zoning district, 30% vegetative cover is required.
    a. Shared open space is not required for an ARS in the D18 zoning district.
8. **Density** – Site measures 79,189 square feet (1.8 acres). At 18 units per acre, the site could accommodate up to 32 dwelling units.
    a. **Density bonuses** – The commission may award a density bonus to an ARS for enhancements to the development. For the D18 zoning district, the total bonus shall not exceed 25%. Applicant should state in the project narrative if they are requesting density bonuses and how they meet the enhancement criteria.
9. **Lighting** – In the project narrative, the applicant should discuss if lighting will be installed.
10. **Noise** – Noise is not expected to be out of character with the D18 residential zoning district.
11. **Flood** – NA
12. **Hazard/Mass Wasting/Avalanche/Hillside Endorsement** – No Known
13. **Wetlands** – No Known
14. **Habitat** – (Eagle – remind applicant to check with Feds; Riparian, etc.) – No Known
15. **Plat or Covenant Restrictions** – No known
16. **Traffic** – Per CBJ 49.40.300 a traffic impact analysis is required for projects that are anticipated to generate more than 500 average daily trips (ADTs). A single-family dwelling generates 9.52 ADTs. The proposal of 14 lots for single-family dwellings would generate 133.28 ADTs. A TIA will not likely be required for this project.
17. **Homeowners Association** – The ARS requires that a HOA be formed. The HOA documents must be recorded with the final plat.

Building Division

18. **Building** - plans will be addressed in plan review
19. **Outstanding Permits** -

	Permit Application	Pstatus	Permit Type	Location	Permit Id	Purpose
1	BLD20130336	Issued	BMH	4090 DELTA DR	2000993	Place 10 manufactured homes on existing foundations

General Engineering/Public Works

20. **Engineering** –
    a. **Easements:** Site plan shall include all easements for drainage, utility lines including plumbing lines, access, snow storage, trash (dumpster) storage, or any other shared use that requires crossing the property line.
    b. **Agreements:** A maintenance and hold harmless (of CBJ) agreement will need to be drafted, signed, and recorded for all shared infrastructure for the development, e.g. driveway, water, sewer, etc.

21. **Drainage** – Submit a drainage plan indicating how drainage from the proposed subdivision will join an established drainage channel or channels. Easements must be provided on the plat for all established drainage ways or any proposed drainage ways that cross any current or future abutting property lines.

22. **Utilities** – (water, power, sewer, etc.) A master water meter shall be installed by the developer prior to any branches or services. The meter must be in an above ground heated space. Water and sewer sizing shall be determined by an Alaskan licensed civil or mechanical engineer.

    Beyond the shared private main and master water meter, a minimum of 1" water service and 4" sewer service will need to be installed to the front property line of each newly created lot prior to the recording of the final plat. At the time of preliminary plat submittal, please submit a construction plan with for the new utilities. The plan needs to include pipe locations, sizing, and grades for sewer to indicate appropriate fall will be achieved. Existing water services not being utilized shall be decommissioned and removed back to the mainline. If utilizing existing services or branches please show their location, size, and material type on the plan.

    If a new private water and/or sewer mains are to be installed within the ROW, the following permits will need to be obtained to provide utilities to the newly created lot:

    a. **CBJ right-of-way (ROW) permit**- Once the construction plan for the utilities is approved, CBJ will create the ROW permit. The permit will allow the tapping of the water and sewer mains, water and sewer service installation, and road restoration within the right-of-way. Inspection fees, refundable bond amount, and conditions will be determined after review of the proposed construction plan. The extension of the utilities within the property will require further permitting and fee assessments. This process is done separately from the subdivision and typically in conjunction with the building permit application.

    b. **CBJ Water and Sewer Utility permits** – The installation of the private water and sewer main lines, services, and the water meter within the private property will be covered by these utility permits.

Fire Marshal

23. **Fire Items/Access** –

List of required applications

Based upon the information submitted for pre-application review, the following list of applications must be submitted in order for the project to receive a thorough and speedy review.

1. ARS Preliminary Plan Approval Application
2. Major Subdivision Application (Required when the subdivision plat is submitted)
3. Development Permit Application

Additional Submittal Requirements

Submittal of additional information, given the specifics of the development proposal and site, are listed below. These items will be required in order for the application to be determined Counter Complete.

1. A copy of this pre-application conference report.

2. Preliminary Plat Checklist (Required when the subdivision plat is submitted)
3. Please see 49.15.940(b) for a description of the Required submissions with an ARS Preliminary Plan Approval:
    a. Ownership
    b. Preliminary Development Plan
    c. Design
    d. Open space, common facilities, and general landscaping
    e. Request for density bonuses (if applicable)
    f. Description of phased development (if applicable)
4. As built survey of existing foundations if you plan to utilize them.

Fee Estimates

The preliminary plan review fees listed below can be found in the CBJ code section 49.85.

Based upon the project plan submitted for pre-application review, staff has attempted to provide an accurate estimate for the permits and permit fees which will be triggered by your proposal.

1. ARS Review Fee
    a. Preliminary Plan – $400.00 plus $80.00 per residential unit
    b. Final Plan - $300.00 plus $60.00 per residential unit
    c. Public notice sign fee $50 plus $100 refundable deposit
2. Major Subdivision Review Fee
    a. Preliminary Plat - $110 per lot
    b. Final Plat - $70 per lot
    c. Public notice sign fee $50 plus $100 refundable deposit
3. ROW Permit (work within the ROW):
    a. $10 permit fee
    b. Inspection fees - $60 per inspection trip or hour, will be determined at time of construction plan review
    c. Refundable bond – will be determined at time of construction plan review. Can be paid in the form of cash, check, surety, or conveyance.
    d. Bond fee – dependent on type of bond payment.

1. Water Utility Permit (work within private property):
    a. Water Connection charge – based on the line size at the location of the water meter as determined by an Alaskan licensed civil engineer.
2. Sewer Utility Permit (work within private property):
    a. Sewer Connection charge – based on the number of drainage fixture units and shall be supplied in the civil construction plans as determined by an Alaskan licensed civil engineer.

b. $60.00 per inspection or trip, will be determined at time of construction plan review.

For informational handouts with submittal requirements for development applications, please visit our website at www.juneau.org/cdd.

Submit your Completed Application
You must submit your application(s) in person with payment made to:

City & Borough of Juneau, Permit Center
230 South Franklin Street
Fourth Floor Marine View Center
Juneau, AK 99801

Phone: (907) 586-0715
Fax: (907) 586-4529
Web: www.juneau.org/cdd

PRELIMINARY PLAT CHECK LIST

Name of Proposed Subdivision: Delta Drive Subdivision

The following items must be included with the initial submittal of a Preliminary Plat:

- ☒ Application, filled out completely
- ☐ Application fee (see fee schedule)
- ☒ Project Narrative
- ☐ Five (5) – 24" by 36" Copies
- ☒ Pre-application Conference Report
- ☒ Lot Closure Report
- ☒ Disclosure of all known environmental hazards and any proposed mitigation measures recommended in the applicable environmental document.
- ☐ Preliminary Plat Checklist: I have reviewed the checklist and all submittals for completeness and accuracy.

_____ _____

Applicant or Surveyor - Signature Date

_____

Applicant or Surveyor - Print Name

GENERAL REQUIREMENTS

- ☐ The preliminary plat shall be prepared by a professional land surveyor, registered in the State of Alaska
- ☐ The preliminary plat shall be submitted on 22 by 34 inch sheets. The director of engineering and public works may approve alternate sheet sizes
- ☐ The preliminary plat shall be drawn with black ink to a scale of one-inch to 100 feet or less, or other suitable scale approved by the director of engineering and public works
- ☐ The preliminary plat shall be oriented with north toward the top of the sheet.
- ☐ A vicinity map shall be located in the upper right-hand corner of the sheet
- ☐ The vicinity map shall be oriented in the same direction as the plat
- ☐ A suitable north arrow shall be shown for the plat and vicinity map
- ☐ All line work and lettering must be of professional quality, and all line widths and lettering sizes must be of such size that all information can be clearly shown without overlap or confusion

GRAPHIC REQUIREMENTS - A preliminary plat shall contain the following information:

Title block - An enclosed title block in the lower right-hand corner containing the following information:

- ☐ The proposed name of the subdivision
- ☐ The legal description of the parcel to be subdivided including U.S. Survey, U.S. Mineral Survey, A.T.S. number or section, township, and range number, as applicable
- ☐ "City and Borough of Juneau, Alaska"
- ☐ "State Recorder's Office at Juneau"
- ☐ The date the preliminary plat was prepared and revised
- ☐ The horizontal scale
- ☐ The name and address of the owner of record
- ☐ The name, address, and telephone number of the surveyor preparing the preliminary plat

Preliminary Plat Checklist
Updated 1/2018
Page 2 of 5

Lot, block, and street information:

- ☑ The area of each lot
- ☑ The dimensions in feet and hundredths of a foot
- ☑ An identifying number and letter for lots and blocks
- ☑ Lots numbered consecutively, commencing with the number "1," with no omissions or duplications
- ☑ If the remainder of an original parcel being subdivided is relatively large, it shall be designated as a "tract" with an identifying number
- ☑ All parcels of land intended to be dedicated for public use or reserved for the use of all of the property owners in the proposed subdivision shall be shown as lots, and consecutively numbered. The purpose and any conditions or limitations on the use of the parcel shall be noted on the plat
- ☑ Abutting properties shall be shown with dashed lines, numbers, and/or letters
- ☑ For resubdivisions or public way vacations, the lines and legal description of the previous lots shall be shown with light dashed lines, numbers, and/or letters, or by a separate plat on the same sheet showing the previous lot lines
- ☑ The minimum data shown for each curve shall be as follows:
  - ☐ Length
  - ☐ Central angle
  - ☐ Radius
  - ☐ Bearing and distance of long chord
- ☐ Setbacks shall be shown on all corner lots and any lots with multiple frontage. Setbacks shall be shown on typical lots

Boundary lines:

- ☑ All boundary lines of the subdivision with bearings and distances described
- ☑ All retraced boundary lines shall show record and measured bearings and distances where they differ. Record dimension information shall be shown within parentheses and include a record source identification
- ☑ The exterior boundary lines of the subdivision shall be a solid black opaque line that is of a width that distinguishes it from all other property lines shown on the plat
- ☐ If phasing is proposed, then the boundaries and number of each phase, sequential lot numbering, and a subdivision name consistent with previous phases shall be shown

Monumentation:

- ☑ The monuments used to establish the basis of bearing
- ☑ Each monument found or set shall be identified on the plat by a symbol
- ☑ A complete description of the monument, including type and all information printed on the cap. A typical drawing shall be shown for each type of monument cap set
- ☑ A legend showing the symbols for all the types of monuments
- ☑ The identification, description location, elevation, and datum of the benchmark used to establish vertical control

Site access, circulation, and utilities:

- ☑ The widths and names of existing rights-of-way within the subdivision and within 100 feet of the subdivision boundary
- ☐ Proposed rights-of-way, including their widths and proposed names
- ☐ The grades of existing and proposed streets within these rights-of-way
- ☐ The width, ownership, use, and record reference of all proposed and existing easements within the subdivision and within 100 feet of the subdivision boundary
- ☐ The width, ownership, and use of all proposed easements

- ☒ All proposed and existing easements shall have sufficient dimensions shown to determine their location on the ground
- ☐ Existing trails or pathways within the subdivision and within 100 feet of the subdivision boundary, including the width of any associated rights-of way or easements
- ☐ Proposed trails or pathways and widths of their rights-of-way
- ☐ If the plat submitted covers only a part of the tract under the control of the applicant, a sketch plat of the prospective street system of the unplatted part shall be submitted
- ☒ The location of any existing or proposed driveways/curb cuts that access or are proposed to access any existing or proposed street

Topographic information:

- ☒ For slopes of less than five percent, show one foot contour lines and include spot elevations at all breaks in grade, along all drainage channels or swales, and at selected points not more than 100 feet apart in all directions
- ☐ For slopes between five percent and ten percent, show two foot contour lines
- ☐ For slopes greater than ten percent, show five foot contour lines
- ☒ Every fifth elevation contour shall be distinctive and clearly labeled
- ☒ Dashed lines shall represent existing contours
- ☒ Mapping shall include any significant features which can materially affect the design of the subdivision, including, but not limited to, structures, fences, walls, and utility poles
- ☒ If irregular slopes or special features are present, additional contour information may be required by the director of engineering and public works for planning or construction purposes. Additional required information may include projecting the topography of the site after grading has taken place, showing such items as:
  - ☐ Pad elevations and drainage patterns for each lot
  - ☐ Tops and toes of all manufactured slopes, including daylight lines
  - ☐ Existing and proposed retaining wall locations and heights
- ☐ For subdivisions located in hillside areas with slopes greater than eighteen percent, additional requirements apply in accordance with CBJ 49.70, Article II

Sewer and water:

- ☑ Existing sewer and water mains within the tract with pipe sizes and grades
- ☑ A draft plan for proposed water and sewer lines showing the size, approximate slope, and connection points with elevations for the purpose of determining the feasibility of construction

Multisheet plats:

- ☐ When a plat requires more than one sheet, exclusive of a certificate sheet, an index sheet shall be included. When a plat requires more than three sheets, a cover sheet shall also be included, showing the subdivision title, a key map, and all certificates. Each additional sheet shall include the following data:
  - ☐ North arrow
  - ☐ Legend
  - ☐ Surveyor's seal and signature
  - ☐ Title block
  - ☐ Sheet _____ of _____
  - ☐ Scale
  - ☐ All plat notes
  - ☐ Vicinity map

N/A

ADDITIONAL MAPPING OR REPORTS- *At the pre-application meeting, it will be determined if any of the following additional mapping or reports are required to be submitted with the preliminary plat. If required, the following additional mapping or reports shall be submitted:*

Hazard and Special Habitat Areas:

- ☐ Any portion of a special flood hazard area, landslide or avalanche area, habitat area as defined by CBJ 49.70.310, or watersheds, either existing at the proposed subdivision site or shown on the overlay maps, adopted pursuant to this title, to exist at the proposed subdivision site, must be depicted on the preliminary plat
- ☐ The boundaries of any wetland areas must be depicted on the preliminary plat. Boundaries must be determined by a person qualified to perform wetland delineations N/A

Soils report:

- ☐ A soils report prepared by an engineer licensed by the State of Alaska shall be required if the proposed subdivision is located farther from the existing public sewer system than specified in CBJ 49.35, and the applicant chooses to provide on-lot waste disposal rather than to connect to the public system. A soils report shall include the following:
  - ☐ Certification that the proposed lots are large enough and have soil of sufficient permeability to permit the construction of approved waste treatment systems for on-lot waste disposal
  - N/A ☐ The location and size of drain fields for each lot
  - ☐ The locations and logs of test borings, percolation test results, and a hydrological evaluation of on-site sewage disposal
  - ☐ If the soils report indicates that the soils found on the site are not of sufficient permeability or the lots are not large enough to permit the construction of systems for on-lot waste disposal, the size of the proposed lots must be increased or alternate methods for waste disposal proposed
  - ☐ The soils report shall describe the nature of the subsurface soils and any soil conditions that would affect the design of the proposed development. The soils report shall state whether the proposed subdivision plan is feasible and provide general solutions for all known geotechnical conditions or problems

Drainage report:

- ☐ A preliminary report specifying the method by which the applicant proposes to manage surface and subsurface drainage for the subdivision and the effect of such method on adjacent areas. Unlike the drainage plan required by CBJ 49.35.510, the preliminary drainage report does not need to be prepared by a licensed engineer. The report must address the following:
  - ☐ A calculation of the increase in stormwater runoff resulting from the proposed development as well as the runoff from all drainage areas associated with the site. Runoff calculations shall be based on a fully-developed subdivision and a 25-year storm event
  - ☐ How drainage from the proposed subdivision will join an established drainage channel or channels, unless the director of engineering and public works approves use of an alternative drainage way
  - ☐ An evaluation of existing drainage ways and structures located between the subdivision and the receiving water body, and verification that the existing drainage ways can accommodate the increased runoff. If the increased runoff cannot be handled, the plan must propose solutions to the problem
  - ☐ All required improvements, on or off site, that are shown on the construction plans in accordance with CBJ 49.35, Article V, and that will be constructed as part of the subdivision

Water:

- ☐ For subdivisions of five or more lots, including major subdivisions, the following shall be included, where applicable, in accordance with CBJ 49.15.412:
  - ☐ If a proposed subdivision is located at greater distance from the existing public water system than specified in CBJ 49.35, Article III, and the applicant chooses not to connect to the public system, a statement that the applicant will provide a community water system or that individual wells will be used

- ☐ A report by a registered engineer or geologist that clearly supports the legal and physical availability of adequate water. Methods for proof of water availability and the standards for quantity are listed in CBJ 49.35, Article III
- ☐ A copy of the State application for a permit to appropriate water in the quantity required to meet the subdivisions demands

☐ This does not apply to remote subdivisions unless: the subdivider of the remote subdivision chooses to provide potable water, a public water system is available and the subdivision falls within the criteria outlined in CBJ 49.35.310(a), or the subdivision has four or fewer lots.

☐ The director for minor subdivisions, and the planning commission for major subdivisions, may, for good cause, temporarily waive the requirement to provide a water report and proof of water, and condition the approval of the preliminary plat upon the provision of both documents as part of the final plat application and approval process.

Erosion control:

☐ A report explaining the method by which the applicant proposes to control erosion and manage runoff, and potential impacts to adjacent properties or water bodies. The report shall include a plan for preservation of ground cover in areas where runoff and resulting erosion need to be minimized.

Traffic study:

☐ A traffic impact analysis may be required with the preliminary plat in accordance with CBJ 49.40.300.

Shadow plats:

N/A ☐ For subdivisions of five or more lots in transition areas, a shadow plat shall be submitted according to CBJ 49.70.710. The shadow plat shall consist of a sketch superimposed on the proposed subdivision layout. This sketch shall reflect any future resubdivision of the parcels into smaller lots consistent with the higher density and the lot size allowed under the transition zoning.

GENERAL NOTES

1. ALL BEARINGS SHOWN ARE TRUE BEARINGS AS ORIENTED TO THE BASIS OF BEARING AND DISTANCES SHOWN ARE REDUCED TO HORIZONTAL FIELD DISTANCES.
2. THE ERROR OF CLOSURE OF THIS SURVEY DOES NOT EXCEED 1:10,000.
3. BASIS OF BEARING
   THE BASIS OF BEARING FOR THIS PLAT IS THE BEARING OF S 0° 01' 00" W, AS SHOWN ON PLAT No. 73-17, DATED OCTOBER 29, 1973, BETWEEN THE RECOVERED MONUMENTS, AS SHOWN ON THIS PLAT.
4. WHERE RECORD SURVEY COURSES (BEARINGS AND/OR DISTANCES) DIFFER FROM THAT OF ACTUAL FIELD MEASURED AND/OR COMPUTED SURVEY COURSES, THE RECORD BEARING AND/OR DISTANCES IS SHOWN WITHIN PARENTHESIS AND REFERENCED TO A RECORDED PLAT (R#).
5. THE PRELIMINARY FIELD SURVEYING WAS PERFORMED ON MAY 26-27, 2020, UTILIZING A TRIMBLE S7 ROBOTICS TOTAL STATION WITH STANDARD LASER RANGING MEASUREMENTS.
6. RECORD INFORMATION
   THE RECORD INFORMATION USED FOR THIS SUBDIVISION IS DERIVED FROM THE OFFICIAL PLATS: PLAT No. 73-17, JUNEAU RECORDING DISTRICT, DATED OCTOBER 29, 1973 (R1), PLAT No. 92-18, JUNEAU RECORDING DISTRICT, DATED APRIL 28,1992 (R2);
7. ALL DISTANCES ARE MEASURED IN U.S. SURVEY FEET, AND HAVE BEEN REDUCED TO THEIR HORIZONTAL EQUIVALENTS.
8. DOMESTIC WATER AND SANITARY SEWER DISPOSAL PROVIDED BY THE CITY AND BOROUGH OF JUNEAU PUBLIC UTILITIES.
9. THE LOTS CREATED THROUGH THIS SUBDIVISION ARE AN ALTERNATIVE RESIDENTIAL SUBDIVISION. AT TIME OF PLAT RECORDING DEVELOPMENT OF LOTS, INCLUDING FURTHER SUBDIVISION OR USE, IS SUBJECT TO CBJ 49.15 ARTICLE IX. SEE CITY AND BOROUGH OF JUNEAU LAND USE CODE FOR CURRENT REGULATIONS.
10. THERE SHALL BE NO DISTURBANCE OR DEVELOPMENT WITHIN THE PERIMETER BUFFER SHOWN ON THIS PLAT, AS REQUIRED BY CBJ 49.15.920(j).
11. AT TIME OF RECORDING, LOTS 2 THROUGH 11 AND 13 THROUGH 15 ARE LIMITED TO ONE SINGLE FAMILY DWELLING. LOT 12 MAY BE PERMITTED ONE SINGLE FAMILY DWELLING AND ONE ACCESSORY APARTMENT. SEE CBJ 49.15 ARTICLE IX FOR CURRENT REGULATIONS.

EASEMENT NOTE

A BLANKET EASEMENT ACROSS LOT 1 FOR UTILITIES, DRAINAGE AND DRIVEWAY ACCESS IS DEDICATED BY THIS PLAT.

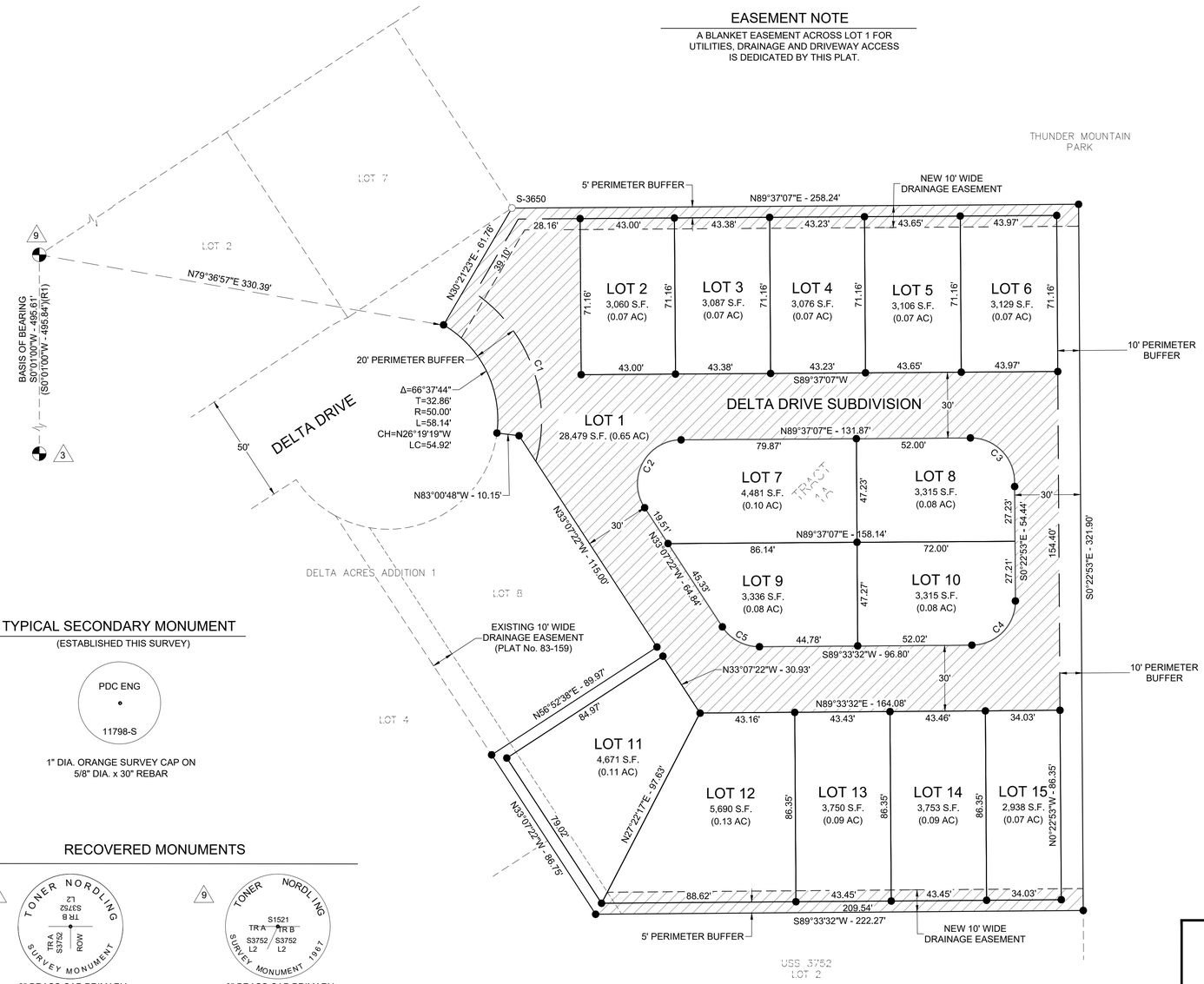

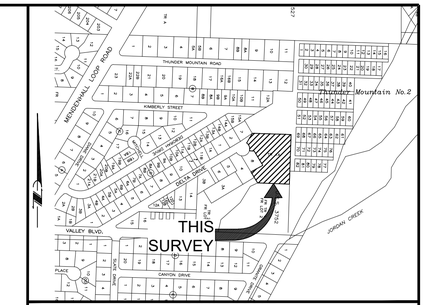

VICINITY MAP

SOURCE: CBJ PROPERTY ATLAS

SCALE: 1"= 500'

LEGEND

- PRIMARY MONUMENT (RECOVERED)
- SECONDARY MONUMENT (RECOVERED)
- SECONDARY MONUMENT (ESTABLISHED)
- SURVEYED LINE
- UNSURVEYED LINE
- EASEMENT LINE
- NEW EASEMENT LINE
- (R1) PLAT No. 73-17, JRD
- (R2) PLAT No. 92-18, JRD
- ACCESS, UTILITY & DRAINAGE EASEMENT
- PERIMETER BUFFER

OWNERSHIP CERTIFICATE

BICKNELL, INC. HEREBY CERTIFIES THAT BICKNELL, INC. IS THE OWNER OF THE PROPERTY SHOWN AND DESCRIBED HEREON AND THAT IT HEREBY ADOPTS THIS PLAT OF SUBDIVISION WITH ITS FREE CONSENT, AND DEDICATE ALL STREETS, ALLEYS, WALKS, PARKS AND OTHER OPEN SPACES TO PUBLIC OR PRIVATE USE AS NOTED:

OWNER _____ DATE: _____ 2020
ROSCOE V. BICKNELL, IV
BICKNELL, INC.

NOTARY ACKNOWLEDGMENT

UNITED STATES OF AMERICA) SS
STATE OF ALASKA)

THIS IS TO CERTIFY THAT ON THIS_____ DAY OF _____, 2020, BEFORE ME, THE UNDERSIGNED A NOTARY PUBLIC IN AND FOR THE STATE OF ALASKA, DULY COMMISSIONED AND SWORN, PERSONALLY APPEARED _____ TO ME KNOWN TO BE THE PERSONS DESCRIBED IN AND WHO EXECUTED THE ABOVE AND FOREGOING INSTRUMENT, AND ACKNOWLEDGED TO ME THAT THEY SIGNED AND SEALED THE SAME FREELY AND VOLUNTARILY FOR THE USES AND PURPOSES THEREIN MENTIONED.
WITNESS MY HAND AND OFFICIAL SEAL THE DAY AND YEAR IN THIS CERTIFICATE FIRST ABOVE WRITTEN.

_____
NOTARY PUBLIC FOR ALASKA

MY COMMISSION EXPIRES: _____

PLANNING COMMISSION PLAT APPROVAL

I HEREBY CERTIFY THAT THE SUBDIVISION PLAT SHOWN HEREON HAS BEEN FOUND TO COMPLY WITH THE SUBDIVISION REGULATIONS OF THE CITY AND BOROUGH OF JUNEAU, ALASKA AND THAT SAID PLAT HAS BEEN APPROVED BY THE PLANNING COMMISSION BY PLAT RESOLUTION NO. _____ , DATED _____ , 2020 , AND THAT THE PLAT SHOWN HEREON HAS BEEN APPROVED FOR RECORDING IN THE JUNEAU RECORDING DISTRICT, STATE RECORDERS OFFICE AT ANCHORAGE.

_____
CHAIRMAN OF THE PLANNING COMMISSION
CITY AND BOROUGH OF JUNEAU

DATED _____ , 2020

ATTEST:

_____
MUNICIPAL CLERK
CITY AND BOROUGH OF JUNEAU

TYPICAL SECONDARY MONUMENT

(ESTABLISHED THIS SURVEY)

1" DIA. ORANGE SURVEY CAP ON 5/8" DIA. x 30" REBAR

RECOVERED MONUMENTS

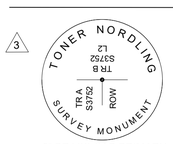

3" BRASS CAP PRIMARY
GOOD CONDITION
1.5' BELOW GRADE

3" BRASS CAP PRIMARY
GOOD CONDITION
FLUSH WITH GRADE

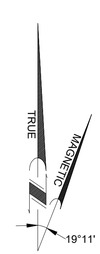

SOURCE: N.O.A.A.
MAGNETIC DECLINATION 19°11'E
NOVEMBER 14, 2017 CHANGING BY
0°17' W/YEAR

CURVE TABLE					
CURVE #	LENGTH	DELTA	RADIUS	CHORD BEARING	CORD DISTANCE
C1	87.15'	71° 20' 01"	70.00'	N19° 52' 32"W	81.63'
C2	42.84'	122° 44' 29"	20.00'	S28° 14' 53"W	35.11'
C3	31.42'	90° 00' 00"	20.00'	N45° 22' 53"W	28.28'
C4	31.40'	89° 56' 25"	20.00'	N44° 35' 20"E	28.27'
C5	20.01'	57° 19' 06"	20.00'	S61° 46' 55"E	19.18'

30' 0 15' 30' 60'
SCALE: 1"=30'

SURVEYOR'S CERTIFICATE

I, CRAIG O. RANSON, IN MY CAPACITY AS A PROFESSIONAL LAND SURVEYOR REGISTERED IN THE STATE OF ALASKA, CERTIFY THAT THIS PLAT REPRESENTS THE SURVEY MADE BY ME OR UNDER MY DIRECT SUPERVISION, THAT THE ACCURACY OF THE SURVEY IS WITHIN THE LIMITS REQUIRED BY TITLE 49 OF THE CODE OF THE CITY AND BOROUGH OF JUNEAU, THAT ALL DIMENSIONS AND RELATIVE BEARINGS ARE CORRECT AND THAT MONUMENTS ARE SET IN PLACE AND NOTED UPON THIS PLAT AS PRESENTED.

DATE: 12/04/20

STATE OF ALASKA 49TH CRAIG O. RANSON LS 11798 REGISTERED PROFESSIONAL LAND SURVEYOR

PDC ENGINEERS
PLAN • DESIGN • CONSTRUCT
A RESPEC COMPANY
9109 Mendenhall Mall Rd. Ste. 4, Juneau, AK 99801
907.780.6060 | AECC605

A PLAT OF
DELTA DRIVE SUBDIVISION
A SUBDIVISION OF
THUNDER MOUNTAIN PARK TRACT 1A
WITHIN U.S. SURVEY NO. 3752
WITHIN CITY AND BOROUGH OF JUNEAU, ALASKA
JUNEAU RECORDING DISTRICT

STATE RECORDER'S OFFICE AT ANCHORAGE

OWNER:
BICKNELL, INC.
P.O. BOX 33517
JUNEAU, AK 99803

SURVEYOR:
PDC ENGINEERS
9109 MENDENHALL MALL ROAD SUITE 4
JUNEAU, ALASKA 99801
(907) 780-6060

DATE: December 04,2020 SCALE: 1"=30' SHEET 1 OF 1 PDC PROJ. No. 20098JN

SMP20200004/ARP20200001

P:\2020\20098JN-Bicknell_Delta\LV\001\dwg\20098JN_PLAT Dec 04, 2020- 10:05 AM

Parcel Map Check Report

Parcel Name: Delta Drive Subdivision - Lot 1
Description:
Process segment order counterclockwise: False
Enable mapcheck across chord: False

North:10,010.3222' East:10,349.3290'

Segment# 1: Curve

Length: 58.145' Radius: 50.000'
Delta: 66.6288 (d) Tangent: 32.862'
Chord: 54.923' Course: N26° 19' 19.00"W
Course In: N83° 00' 27.08"W Course Out: N30° 21' 49.08"E
RP North: 10,016.4091' East: 10,299.7009'
End North: 10,059.5508' East: 10,324.9752'

Segment# 2: Line

Course: N30° 21' 23.00"E Length: 61.760'
North: 10,112.8435' East: 10,356.1873'

Segment# 3: Line

Course: N89° 37' 07.00"E Length: 258.240'
North: 10,114.5624' East: 10,614.4216'

Segment# 4: Line

Course: S0° 22' 53.00"E Length: 321.900'
North: 9,792.6696' East: 10,616.5643'

Segment# 5: Line

Course: S89° 33' 32.00"W Length: 222.270'
North: 9,790.9584' East: 10,394.3009'

Segment# 6: Line

Course: N33° 07' 22.00"W Length: 86.750'
North: 9,863.6116' East: 10,346.8977'

Segment# 7: Line

Course: N56° 52' 38.00"E Length: 89.970'
North: 9,912.7744' East: 10,422.2477'

Segment# 8: Line
Course: N33° 07' 22.00"W Length: 115.000'
North: 10,009.0870' East: 10,359.4077'

Segment# 9: Line
Course: N83° 00' 48.00"W Length: 10.154'
North: 10,010.3222' East: 10,349.3291'

Perimeter: 2,929.504' Area: 28,479.40Sq.Ft.
Error Closure: 0.0000 Course: S81° 36' 37.42"E
Error North : 0.00000 East: 0.00003

Precision 1: 1,224,189,000.000

Parcel Name: Delta Drive Subdivision - Lot 10
Description:
Process segment order counterclockwise: False
Enable mapcheck across chord: False
North:9,913.6361' East:10,565.7788'

Segment# 1: Line
Course: S89° 33' 32.00"W Length: 52.021'
North: 9,913.2356' East: 10,513.7594'

Segment# 2: Line
Course: N0° 22' 53.00"W Length: 47.265'
North: 9,960.4996' East: 10,513.4448'

Segment# 3: Line
Course: N89° 37' 07.00"E Length: 72.000'
North: 9,960.9788' East: 10,585.4432'

Segment# 4: Line
Course: S0° 22' 53.00"E Length: 27.211'
North: 9,933.7684' East: 10,585.6243'

Segment# 5: Curve
Length: 31.395' Radius: 20.000'
Delta: 89.9403 (d) Tangent: 19.979'
Chord: 28.270' Course: S44° 35' 19.50"W
Course In: S89° 37' 07.00"W Course Out: S0° 26' 28.00"E
RP North: 9,933.6353' East: 10,565.6247'
End North: 9,913.6359' East: 10,565.7787'

Perimeter: 229.892' Area: 3,314.75Sq.Ft.
Error Closure: 0.0002 Course: S29° 57' 17.16"W
Error North : -0.00021 East: -0.00012

Precision 1: 1,149,460.000

Parcel Name: Delta Drive Subdivision - Lot 11
Description:
Process segment order counterclockwise: False
Enable mapcheck across chord: False
North:9,795.9792' East:10,396.9951'

Segment# 1: Line
Course: N33° 07' 22.00"W Length: 79.017'
North: 9,862.1561' East: 10,353.8175'

Segment# 2: Line
Course: N56° 52' 38.00"E Length: 84.970'
North: 9,908.5867' East: 10,424.9800'

Segment# 3: Line
Course: S33° 07' 22.00"E Length: 30.932'
North: 9,882.6811' East: 10,441.8823'

Segment# 4: Line
Course: S27° 22' 16.70"W Length: 97.632'
North: 9,795.9794' East: 10,396.9955'

Perimeter: 292.552' Area: 4,671.19Sq.Ft.

Error Closure: 0.0004 Course: N67° 05' 38.55"E
Error North : 0.00016 East: 0.00037

Precision 1: 731,377.500

Parcel Name: Delta Drive Subdivision - Lot 12
Description:
Process segment order counterclockwise: False
Enable mapcheck across chord: False
North:9,796.6615' East:10,485.6157'

Segment# 1: Line
Course: S89° 33' 32.00"W Length: 88.623'
North: 9,795.9792' East: 10,396.9954'

Segment# 2: Line
Course: N27° 22' 16.70"E Length: 97.632'
North: 9,882.6809' East: 10,441.8822'

Segment# 3: Line
Course: N89° 33' 32.00"E Length: 43.160'
North: 9,883.0132' East: 10,485.0409'

Segment# 4: Line
Course: S0° 22' 53.00"E Length: 86.354'
North: 9,796.6611' East: 10,485.6157'

Perimeter: 315.770' Area: 5,690.00Sq.Ft.
Error Closure: 0.0004 Course: S4° 29' 32.15"W
Error North : -0.00041 East: -0.00003

Precision 1: 789,422.500

Parcel Name: Delta Drive Subdivision - Lot 13
Description:
Process segment order counterclockwise: False
Enable mapcheck across chord: False
North:9,796.9959' East:10,529.0453'

Segment# 1: Line
Course: S89° 33' 32.00"W Length: 43.431'
North: 9,796.6615' East: 10,485.6155'

Segment# 2: Line
Course: N0° 22' 53.00"W Length: 86.354'
North: 9,883.0136' East: 10,485.0407'

Segment# 3: Line
Course: N89° 33' 32.00"E Length: 43.431'
North: 9,883.3480' East: 10,528.4704'

Segment# 4: Line
Course: S0° 22' 53.00"E Length: 86.354'
North: 9,796.9959' East: 10,529.0453'

Perimeter: 259.570' Area: 3,750.42Sq.Ft.
Error Closure: 0.0000 Course: N0° 00' 00.00"E
Error North : 0.00000 East: 0.00000

Precision 1: 259,570,000.000

Parcel Name: Delta Drive Subdivision - Lot 14
Description:
Process segment order counterclockwise: False
Enable mapcheck across chord: False
North:9,797.3305' East:10,572.5072'

Segment# 1: Line
Course: S89° 33' 32.00"W Length: 43.463'
North: 9,796.9959' East: 10,529.0455'

Segment# 2: Line
Course: N0° 22' 53.00"W Length: 86.354'
North: 9,883.3480' East: 10,528.4707'

Segment# 3: Line

Course: N89° 33' 32.00"E
Length: 43.463'
North: 9,883.6826'
East: 10,571.9324'

Segment# 4: Line
Course: S0° 22' 53.00"E
Length: 86.354'
North: 9,797.3305'
East: 10,572.5072'

Perimeter: 259.634'
Area: 3,753.22Sq.Ft.
Error Closure: 0.0000
Course: N0° 00' 00.00"E
Error North : 0.00000
East: 0.00000

Precision 1: 259,634,000.000

Parcel Name: Delta Drive Subdivision - Lot 15
Description:
Process segment order counterclockwise: False
Enable mapcheck across chord: False
North:9,797.5925'
East:10,606.5313'

Segment# 1: Line
Course: S89° 33' 32.00"W
Length: 34.025'
North: 9,797.3305'
East: 10,572.5073'

Segment# 2: Line
Course: N0° 22' 53.00"W
Length: 86.354'
North: 9,883.6826'
East: 10,571.9325'

Segment# 3: Line
Course: N89° 33' 32.00"E
Length: 34.025'
North: 9,883.9445'
East: 10,605.9565'

Segment# 4: Line
Course: S0° 22' 53.00"E
Length: 86.354'
North: 9,797.5925'
East: 10,606.5313'

Perimeter: 240.758'
Area: 2,938.20Sq.Ft.
Error Closure: 0.0000
Course: N0° 00' 00.00"E
Error North : 0.00000
East: 0.00000

Precision 1: 240,758,000.000

Parcel Name: Delta Drive Subdivision - Lot 2
Description:
Process segment order counterclockwise: False
Enable mapcheck across chord: False

North:10,108.0499'	East:10,387.2190'

Segment# 1: Line

Course: N89° 37' 07.00"E	Length: 43.000'
North: 10,108.3361'	East: 10,430.2180'

Segment# 2: Line

Course: S0° 22' 53.00"E	Length: 71.160'
North: 10,037.1777'	East: 10,430.6917'

Segment# 3: Line

Course: S89° 37' 07.00"W	Length: 43.000'
North: 10,036.8915'	East: 10,387.6926'

Segment# 4: Line

Course: N0° 22' 53.00"W	Length: 71.160'
North: 10,108.0499'	East: 10,387.2190'

Perimeter: 228.320'	Area: 3,059.88Sq.Ft.
Error Closure: 0.0000	Course: N0° 00' 00.00"E
Error North : 0.00000	East: 0.00000

Precision 1: 228,320,000.000

Parcel Name: Delta Drive Subdivision - Lot 3
Description:
Process segment order counterclockwise: False
Enable mapcheck across chord: False

North:10,037.4666'	East:10,474.0756'

Segment# 1: Line

Course: S89° 37' 07.00"W
Length: 43.385'
North: 10,037.1778'
East: 10,430.6916'

Segment# 2: Line
Course: N0° 22' 53.00"W
Length: 71.160'
North: 10,108.3362'
East: 10,430.2179'

Segment# 3: Line
Course: N89° 37' 07.00"E
Length: 43.385'
North: 10,108.6250'
East: 10,473.6020'

Segment# 4: Line
Course: S0° 22' 53.00"E
Length: 71.160'
North: 10,037.4666'
East: 10,474.0756'

Perimeter: 229.090'
Area: 3,087.27Sq.Ft.
Error Closure: 0.0000
Course: N0° 00' 00.00"E
Error North : 0.00000
East: 0.00000

Precision 1: 229,090,000.000

Parcel Name: Delta Drive Subdivision - Lot 4
Description:
Process segment order counterclockwise: False
Enable mapcheck across chord: False
North:10,037.7543'
East:10,517.3055'

Segment# 1: Line
Course: S89° 37' 07.00"W
Length: 43.231'
North: 10,037.4666'
East: 10,474.0755'

Segment# 2: Line
Course: N0° 22' 53.00"W
Length: 71.160'
North: 10,108.6250'
East: 10,473.6018'

Segment# 3: Line
Course: N89° 37' 07.00"E
Length: 43.231'
North: 10,108.9128'
East: 10,516.8319'

Segment# 4: Line
Course: S0° 22' 53.00"E Length: 71.160'
North: 10,037.7543' East: 10,517.3055'

Perimeter: 228.782' Area: 3,076.31Sq.Ft.
Error Closure: 0.0000 Course: N0° 00' 00.00"E
Error North : 0.00000 East: 0.00000

Precision 1: 228,782,000.000

Parcel Name: Delta Drive Subdivision - Lot 5
Description:
Process segment order counterclockwise: False
Enable mapcheck across chord: False
North:10,038.0449' East:10,560.9569'

Segment# 1: Line
Course: S89° 37' 07.00"W Length: 43.652'
North: 10,037.7543' East: 10,517.3059'

Segment# 2: Line
Course: N0° 22' 53.00"W Length: 71.160'
North: 10,108.9128' East: 10,516.8322'

Segment# 3: Line
Course: N89° 37' 07.00"E Length: 43.652'
North: 10,109.2033' East: 10,560.4833'

Segment# 4: Line
Course: S0° 22' 53.00"E Length: 71.160'
North: 10,038.0449' East: 10,560.9569'

Perimeter: 229.625' Area: 3,106.30Sq.Ft.
Error Closure: 0.0000 Course: N0° 00' 00.00"E
Error North : 0.00000 East: 0.00000

Precision 1: 229,624,000.000

Parcel Name: Delta Drive Subdivision - Lot 6
Description:
Process segment order counterclockwise: False
Enable mapcheck across chord: False

North:10,038.3376' East:10,604.9288'

Segment# 1: Line
Course: S89° 37' 07.00"W Length: 43.973'
North: 10,038.0449' East: 10,560.9568'

Segment# 2: Line
Course: N0° 22' 53.00"W Length: 71.160'
North: 10,109.2033' East: 10,560.4831'

Segment# 3: Line
Course: N89° 37' 07.00"E Length: 43.973'
North: 10,109.4960' East: 10,604.4551'

Segment# 4: Line
Course: S0° 22' 53.00"E Length: 71.160'
North: 10,038.3376' East: 10,604.9288'

Perimeter: 230.265' Area: 3,129.10Sq.Ft.
Error Closure: 0.0000 Course: N0° 00' 00.00"E
Error North : 0.00000 East: 0.00000

Precision 1: 230,266,000.000

Parcel Name: Delta Drive Subdivision - Lot 7
Description:
Process segment order counterclockwise: False
Enable mapcheck across chord: False

North:9,959.9262' East:10,427.3039'

Segment# 1: Line
Course: N33° 07' 22.00"W Length: 19.510'
North: 9,976.2659' East: 10,416.6430'

Segment# 2: Curve
Length: 42.845' Radius: 20.000'
Delta: 122.7414 (d) Tangent: 36.638'
Chord: 35.110' Course: N28° 14' 52.50"E
Course In: N56° 52' 38.00"E Course Out: N0° 22' 53.00"W
RP North: 9,987.1946' East: 10,433.3930'
End North: 10,007.1941' East: 10,433.2599'

Segment# 3: Line
Course: N89° 37' 07.00"E Length: 79.872'
North: 10,007.7258' East: 10,513.1301'

Segment# 4: Line
Course: S0° 22' 53.00"E Length: 47.227'
North: 9,960.4998' East: 10,513.4445'

Segment# 5: Line
Course: S89° 37' 07.00"W Length: 86.143'
North: 9,959.9264' East: 10,427.3034'

Perimeter: 275.598' Area: 4,481.08Sq.Ft.
Error Closure: 0.0006 Course: N68° 20' 16.23"W
Error North : 0.00021 East: -0.00054

Precision 1: 459,328.333

Parcel Name: Delta Drive Subdivision - Lot 8
Description:
Process segment order counterclockwise: False
Enable mapcheck across chord: False
North:10,007.7259' East:10,513.1305'

Segment# 1: Line
Course: N89° 37' 07.00"E Length: 52.000'
North: 10,008.0720' East: 10,565.1294'

Segment# 2: Curve

Length: 31.416' Radius: 20.000'
Delta: 90.0000 (d) Tangent: 20.000'
Chord: 28.284' Course: S45° 22' 53.00"E
Course In: S0° 22' 53.00"E Course Out: N89° 37' 07.00"E
RP North: 9,988.0725' East: 10,565.2625'
End North: 9,988.2056' East: 10,585.2621'

Segment# 3: Line
Course: S0° 22' 53.00"E Length: 27.227'
North: 9,960.9792' East: 10,585.4433'

Segment# 4: Line
Course: S89° 37' 07.00"W Length: 72.000'
North: 9,960.4999' East: 10,513.4449'

Segment# 5: Line
Course: N0° 22' 53.00"W Length: 47.227'
North: 10,007.7259' East: 10,513.1305'

Perimeter: 229.871' Area: 3,314.53Sq.Ft.
Error Closure: 0.0000 Course: S45° 00' 00.00"E
Error North : 0.00000 East: 0.00000

Precision 1: 229,870,000.000

Parcel Name: Delta Drive Subdivision - Lot 9
Description:
Process segment order counterclockwise: False
Enable mapcheck across chord: False
North:9,960.4996' East:10,513.4449'

Segment# 1: Line
Course: S0° 22' 53.00"E Length: 47.265'
North: 9,913.2357' East: 10,513.7595'

Segment# 2: Line
Course: S89° 33' 32.00"W Length: 44.783'
North: 9,912.8909' East: 10,468.9778'

Segment# 3: Curve

Length: 20.008'	Radius: 20.000'
Delta: 57.3183 (d)	Tangent: 10.931'
Chord: 19.184'	Course: N61° 46' 55.00"W
Course In: N0° 26' 28.00"W	Course Out: S56° 52' 38.00"W
RP North: 9,932.8903'	East: 10,468.8239'
End North: 9,921.9616'	East: 10,452.0738'

Segment# 4: Line

Course: N33° 07' 22.00"W	Length: 45.331'
North: 9,959.9264'	East: 10,427.3034'

Segment# 5: Line

Course: N89° 37' 07.00"E	Length: 86.143'
North: 9,960.4998'	East: 10,513.4445'

Perimeter: 243.529'	Area: 3,336.39Sq.Ft.
Error Closure: 0.0004	Course: N67° 37' 18.74"W
Error North : 0.00017	East: -0.00041

Precision 1: 608,825.000

DELTA DRIVE SUBDIVISION CONSTRUCTION IMPROVEMENT PLAN

JUNEAU, ALASKA

SHEET INDEX

SHEET No.	DESCRIPTION
C001	COVER SHEET
C002	GENERAL NOTES, ABBREVIATIONS AND SYMBOLS
C003	SUMMARY TABLES
C004	EXISTING SITE CONDITIONS
C100	TYPICAL SECTIONS
C101	CONSTRUCTION DETAILS
C102	CONSTRUCTION DETAILS
C200	OVERALL SITE PLAN
C201	SITE & UTILITY PLAN
C202	SITE & UTILITY PLAN
C203	GRADING PLAN
C204	WATER METER ENCLOSURE DETAILS
C205	WATER METER ENCLOSURE DETAILS
C206	WATER METER ENCLOSURE DETAILS
C207	WATER METER ENCLOSURE DETAILS
C300	EROSION & SEDIMENT CONTROL PLAN
C301	EROSION & SEDIMENT CONTROL DETAILS

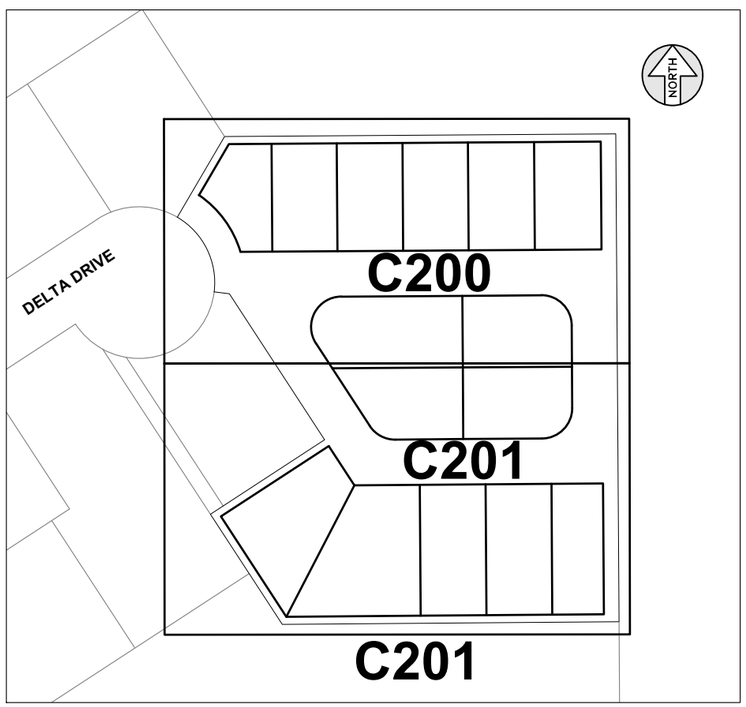

SHEET KEY MAP

N.T.S.

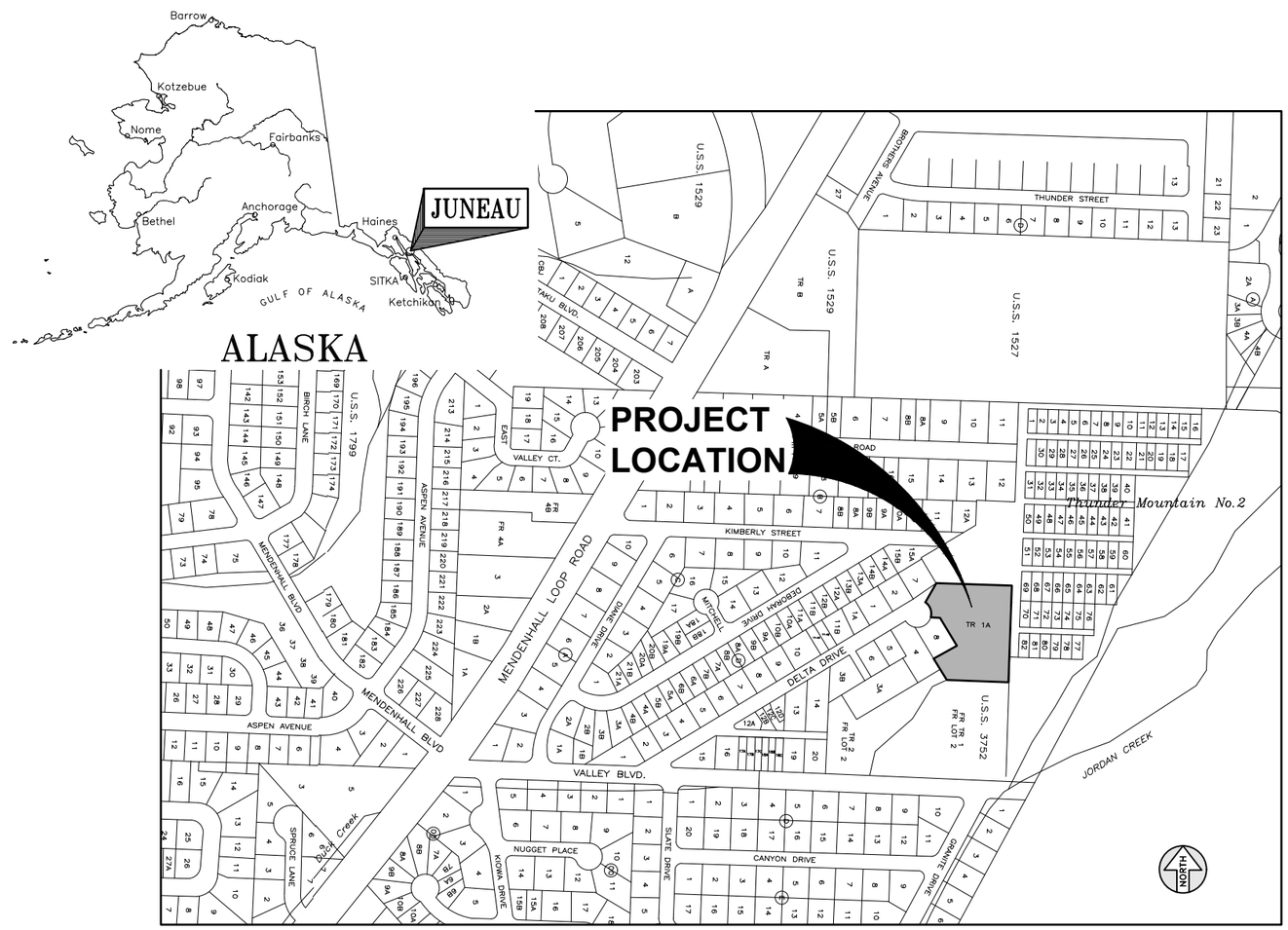

PROJECT LOCATION MAP

500' 0 250' 500' 1000'

SCALE: 1"=500'

DESIGN	MSM
DRAWN	MSM
CHECK	JMP
APPROVED	JMP
FILE:	

No.	DATE	REVISION	BY	APRVD.

DELTA DRIVE SUBDIVISION

JUNEAU, AK

BICKNELL INC. QUALITY CONSTRUCTION

STATE OF ALASKA 49TH Joseph M. Pusich CE 8152 REGISTERED PROFESSIONAL ENGINEER 12/03/20

PDC ENGINEERS
PLAN • DESIGN • CONSTRUCT
A BESPEC COMPANY
9101 Mendenhall Mall Road, Suite B4, Juneau, AK 99801
907.780.6060 | AECC605

COVER SHEET

DATE: Dec 03, 2020
PDC No. 20098JN

SHEET
C001

P:\2020\20098JN-Bicknell_Delta\C\C0001cnst20098JN.dwg PLOT: December 03, 2020 at: 3:58pm Micki.Minsch

GENERAL CONSTRUCTION NOTES

1. CBJ ENGINEERING STANDARD DETAILS BOOK FOR CIVIL ENGINEERING PROJECTS AND SUBDIVISION IMPROVEMENTS DATED AUGUST, 2011 AND CBJ ENGINEERING STANDARD SPECIFICATIONS DATED DECEMBER, 2003 ARE MADE A PART OF THIS CONTRACT, WITH CURRENT REVISIONS AS APPLICABLE.
2. LARGE BOULDERS, HARDPAN, STUMPS, LOGS, ORGANICS AND GROUND WATER MAY BE ENCOUNTERED AT VARIOUS DEPTHS DURING EXCAVATION OPERATIONS. THESE MATERIALS SHALL BE DISPOSED OF AS REQUIRED BY THE ENGINEER.
3. GRADES AND ALIGNMENTS SHOWN ON THESE PLANS ARE SUBJECT TO MINOR REVISIONS AS APPROVED BY THE ENGINEER.
4. LOCATION OF WATER SYSTEM IMPROVEMENTS, SANITARY SEWER MANHOLES, STORM DRAIN STRUCTURES, PIPING AND PIPE LENGTHS ARE SUBJECT TO MINOR REVISIONS AS APPROVED BY THE ENGINEER.
5. LOCATIONS OF EXISTING UNDERGROUND SEWER, WATER, TELEPHONE, CABLE TELEVISION, AND POWER UTILITIES SHOWN ON THESE PLANS WERE DERIVED FROM CBJ AS-BUILTS OR FIELD LOCATES. ACTUAL LOCATIONS MAY VARY FROM THOSE SHOWN. THE CONTRACTOR IS RESPONSIBLE FOR LOCATING, PROTECTING AND MAINTAINING THE UTILITIES THROUGHOUT THE CONSTRUCTION OF THIS PROJECT. ANY DAMAGE RESULTING TO THESE UNDERGROUND UTILITIES DURING CONSTRUCTION SHALL BE PAID FOR BY THE CONTRACTOR AND SHALL BE CONSIDERED INCIDENTAL TO THE CONTRACT. CALL "DIAL BEFORE YOU DIG" @ 586-1333 FOR UNDERGROUND UTILITY LOCATES AND 811 ALASKA DIG LINE FOR ACS AND GCI PRIOR TO ANY EXCAVATION ACTIVITIES.
6. CONTRACTOR SHALL ASSURE GARBAGE PICKUP, DAILY MAIL SERVICE, FUEL AND SERVICE DELIVERIES WILL BE UNINTERRUPTED TO ALL RESIDENTS AFFECTED BY THIS PROJECT.
7. PROPERTY LINE LOCATIONS USED IN THESE PLANS WERE DERIVED FROM RECORD PLATS AND DO NOT REPRESENT A SUBDIVISION BOUNDARY SURVEY.
8. ALL SIGN INSTALLATIONS OR RELOCATIONS SHALL BE PERFORMED ACCORDING TO THE "MANUAL ON UNIFORM TRAFFIC CONTROL DEVICES" (M.U.T.C.D.) WITH THE ALASKA SUPPLEMENT.
9. ALL ITEMS DESIGNATED TO BE REMOVED SHALL BE DISPOSED OF AT AN APPROVED DISPOSAL SITE, EXCEPT AS NOTED IN THE CONTRACT DOCUMENTS.
10. PROVIDE KNOCKOUTS IN PRECAST STORM DRAIN STRUCTURES FOR ALL PIPES SHOWN ON THE PLANS.
10. ONLY HORIZONTAL ELBOW FITTINGS (BENDS) ARE SHOWN ON THE PLANS. ADDITIONAL FITTINGS WILL BE REQUIRED FOR VERTICAL DEFLECTIONS NEAR CONNECTION TO EXISTING PIPES, AND AT OTHER LOCATIONS REQUIRING GRADE CHANGES TO AVOID CONFLICTS.
11. THE CONTRACTOR SHALL NOT STORE MATERIALS OR EQUIPMENT OR OPERATE EQUIPMENT WITH ITS TRACKS OR WHEELS PLACED ON PRIVATE PROPERTY WITHOUT THE WRITTEN APPROVAL OF THE PROPERTY OWNER.
11. THE CONTRACTOR SHALL NOTIFY CBJ WATER UTILITIES OPERATOR LONI VANKIRK (723-4975) OF PROPOSED WATER SERVICE INTERRUPTION AND SUBMIT THE "WATER SYSTEM SPECIAL USE PERMIT" (COSIGNED BY THE ENGINEER) AT LEAST 48-HOURS PRIOR TO SHUTDOWN OR FLUSHING OF MAINLINE WATER PIPE. NO WATER SERVICE INTERRUPTION MAY PROCEED UNTIL THIS APPROVAL IS OBTAINED.
12. CONTRACTOR SHALL REFERENCE ALL EXISTING PROPERTY CORNER MONUMENTS (I.E. BRASS CAP MONUMENTS, REBARS OR CHISELED X'S) PRIOR TO CONSTRUCTION THAT WILL BE DISTURBED DURING HIS WORK, AND REMONUMENT AFTER CONSTRUCTION OPERATIONS. ALL WORK SHALL BE DONE BY, OR UNDER THE DIRECTION OF, AN ALASKA REGISTERED LAND SURVEYOR. ALL EXISTING PROPERTY CORNERS ARE NOT NECESSARILY SHOWN ON THE PLANS.
13. THE PLAN DRAWINGS DO NOT NECESSARILY SHOW ALL TREES AND SHRUBS THAT MAY BE ENCOUNTERED DURING CONSTRUCTION ACTIVITIES. NO TREES, SHRUBS OR LANDSCAPING ARE TO BE REMOVED OR DAMAGED, UNLESS SHOWN ON THE DRAWINGS OR DIRECTED BY THE ENGINEER.
14. "JUMPING JACK", OR SIMILAR TYPE COMPACTORS SHALL BE USED FOR COMPACTION WITHIN 18-INCHES OF THE OUTSIDE SURFACE OF ALL WATER VALVE BOXES, CATCH BASINS AND MANHOLES.
15. THE USE OF GROUT AND QUICKSET CEMENT PRODUCTS WITH ADJUSTING RINGS, BRICKS, WOOD, STONES AND OTHER SIMILAR GRADE ADJUSTMENT DEVICES TO SUPPORT CATCH BASIN FRAMES OVER CATCH BASINS AND MANHOLES WILL NOT BE PERMITTED ON THIS PROJECT. SEE CBJ STANDARD SPECIFICATIONS, SECTION 02502 - STORM SEWER MANHOLES, INLETS AND CATCH BASINS AND THE DRAWINGS FOR CATCH BASIN FRAME SUPPORT REQUIREMENTS. SANITARY SEWER MANHOLES SHALL BE ADJUSTED PER CBJ STANDARD SPECIFICATIONS 02402 - SANITARY SEWER MANHOLES AND CLEANOUTS.
16. THE CONTRACTOR SHALL INSTALL AND MAINTAIN ENGINEER APPROVED EROSION CONTROL DEVICES DURING CONSTRUCTION PER CBJ STANDARD SPECIFICATIONS SECTION 01570 REQUIREMENTS.
17. ALL WORK FOR THESE PLANS SHALL BE CONDUCTED IN STRICT ACCORDANCE WITH APPLICABLE LOCAL, STATE AND FEDERAL LAWS AND STANDARDS.

ABBREVIATIONS

AC	ASBESTOS CEMENT
ACS	ALASKA COMMUNICATIONS SYSTEMS
AEL&P	ALASKA ELECTRIC LIGHT & POWER
APPROX	APPROXIMATE
AST	ABOVEGROUND STORAGE TANK
BC	BACK OF CURB
BLVD	BOULEVARD
BOP	BEGINNING OF PROJECT
CB	CATCH BASIN
CBJ	CITY & BOROUGH OF JUNEAU
CHB	CHORD BEARING
CHL	CHORD LENGTH
C/L	CENTERLINE
CI	CAST IRON
CLR	CLEAR
CMP	CORRUGATED METAL PIPE
CONC	CONCRETE
CONT	CONTINUOUS
CPP	CORRUGATED POLYETHYLENE PIPE
CTE	CONNECT TO EXISTING
DI	DUCTILE IRON
DIP	DUCTILE IRON PIPE
DIA	DIAMETER
E	EASTING
EG	EXISTING GRADE
EL	ELEVATION
EOP	END OF PROJECT
EP	EDGE OF PAVEMENT
EXIST	EXISTING
EXP	EXPANSION
FG	FINISH GRADE
FH	FIRE HYDRANT
FL	FLOW LINE
GCI	GENERAL COMMUNICATION INC.
GV	GATE VALVE
HDPE	HIGH DENSITY POLYETHYLENE
HP	HIGH PRESSURE
IE	INVERT ELEVATION
L	LENGTH
LP	LOW POINT
LT	LEFT
MAX	MAXIMUM
MIN	MINIMUM
MJ	MECHANICAL JOINT
MTE	MATCH TO EXISTING
N	NORTHING
N/A	NOT APPLICABLE
NFS	NON-FROST SUSCEPTIBLE
NTS	NOT TO SCALE
NVC	NO VERTICAL CURVE
OC	ON CENTER
PC	POINT OF CURVATURE
PERF	PERFORATED
PI	POINT OF INTERSECTION
P/L	PROPERTY LINE
POC	POINT ON CURVE
POL	POINT ON LINE
PP	POWER POLE
PT	POINT OF TANGENCY
PVC	POLYVINYL CHLORIDE
R	RADIUS
ROW	RIGHT-OF-WAY
RP	RADIUS POINT
RT	RIGHT
SDMH	STORM DRAIN MANHOLE
SS	SANITARY SEWER
SSCO	SANITARY SEWER CLEANOUT
SSMH	SANITARY SEWER MANHOLE
STA	STATION
STD	STANDARD
SWPPP	STORM WATER POLLUTION PREVENTION PLAN
T	TANGENT
TBG	TOP BACK OF GUTTER
TBM	TEMPORARY BENCH MARK
TC	TOP OF CONCRETE
TOB	TOP OF BANK
TOP	TOP OF PIPE
TYP	TYPICAL
UD	UNDERDRAIN
UON	UNLESS OTHERWISE NOTED
UST	UNDERGROUND STORAGE TANK
VC	VERTICAL CURVE
VERT	VERTICAL
VPI	VERTICAL POINT OF INTERSECTION
W/	WITH

SYMBOLS

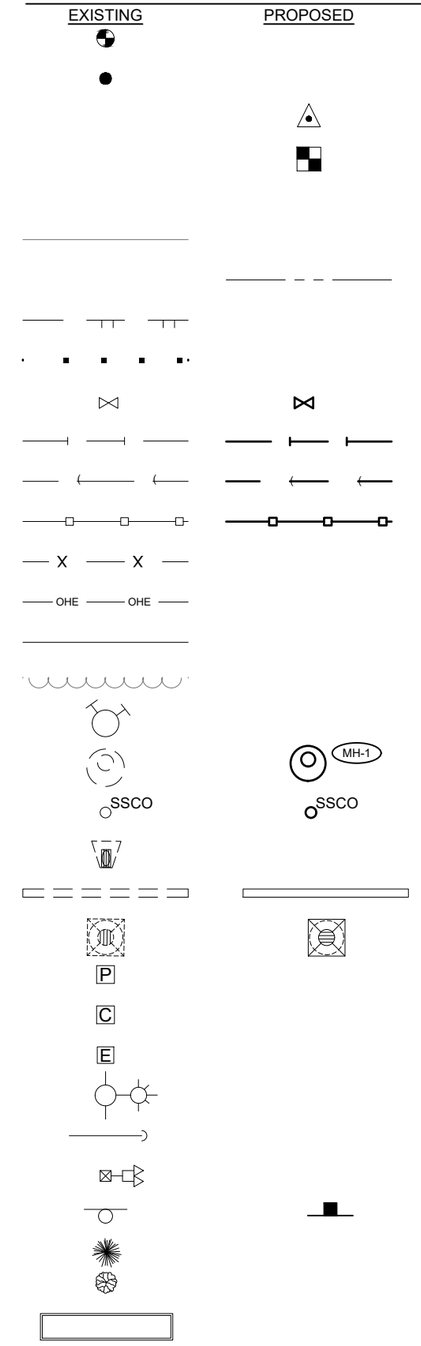

PRIMARY MONUMENT
SECONDARY MONUMENT
SURVEY SPIKE / MAG NAIL
TEMPORARY BENCHMARK
PROPERTY / BOUNDARY LINE
PROPERTY / BOUNDARY LINE UNSURVEYED
PROJECT BASELINE
TOP OF BANK
TOE OF SLOPE
WATER GATE VALVE/CURB STOP
WATER LINE/SERVICE
SEWER LINE/SERVICE
WOODEN FENCE
CHAIN-LINK FENCE
OVERHEAD ELECTRIC LINE
ASPHALT PAVEMENT
TREE LINE
FIRE HYDRANT
SANITARY SEWER MANHOLE
SANITARY SEWER CLEANOUT
CONCRETE HEADWALL W/ TRASH RACK
STORM SEWER PIPE
CATCH BASIN W/ AREA DRAIN
TELEPHONE PEDESTAL
CABLE PEDESTAL
ELECTRICAL PEDESTAL
POWER POLE WITH LIGHT
GUY WIRE
GANG STYLE MAILBOX
STREET SIGN
CONIFEROUS TREE
DECIDUOUS TREE
BUILDING FOUNDATION

P:\2020\20098JN-Bicknell_Delta\CIC\00010.cmd\20098JN.dwg PLOT: December 03, 2020 at: 3:58pm Mick.Minsch

DESIGN MSM
DRAWN MSM
CHECK JMP
APPROVED JMP
FILE:

No.	DATE	REVISION	BY	APRVD.

DELTA DRIVE SUBDIVISION
JUNEAU, AK

STATE OF ALASKA 49TH Joseph M. Pusich CE 8152 REGISTERED PROFESSIONAL ENGINEER 12/03/20

PDC ENGINEERS
PLAN • DESIGN • CONSTRUCT
A BESPEC COMPANY
9101 Mendenhall Loop Road, Juneau, AK 99801
907.780.6060 | AECC005

GENERAL NOTES, ABBREVIATIONS AND SYMBOLS

DATE: Dec 03, 2020
PDC No. 20098JN
SHEET
C002

WATER SERVICE SUMMARY

LOT No.	STATION & OFFSET	SIZE/TYPE	REMARKS
2	10+95.1, 13.5' LT	1" POLY	SEE NOTE 1
3	11+28.9, 13.5' LT	1" POLY	SEE NOTE 1
4	11+81.8, 13.5' LT	1" POLY	SEE NOTE 1
5	12+15.3, 13.5' LT	1" POLY	SEE NOTE 1
6	12+58.8, 21.4' LT	1" POLY	SEE NOTE 1
7	11+68.0, 13.4' RT	1" POLY	NEW SERVICE
8	12+28.0, 13.5' RT	1" POLY	NEW SERVICE
9	14+71.4, 13.4' RT	1" POLY	NEW SERVICE
10	14+11.4, 13.3' RT	1" POLY	NEW SERVICE
11	15+22.0, 18.1' LT	1" POLY	SEE NOTE 1
12	14+96.0, 13.5' LT	1" POLY	SEE NOTE 1
13	14+62.5, 13.5' LT	1" POLY	SEE NOTE 1
14	14+09.2, 13.5' LT	1" POLY	SEE NOTE 1
15	13+85.5, 21.6' LT	1" POLY	SEE NOTE 1

NOTES:

1. EXISTING FOUNDATION PADS REPORTED TO HAVE 3/4" POLY WATER SERVICES TO EACH UNIT. EXISTING WATER SERVICES MAY BE REUSED IF FOUND TO BE IN SATISFACTORY CONDITION. FLUSHING, DISINFECTION AND PRESSURE TESTING SHALL BE PERFORMED ON THE EXISTING 3/4" POLY WATER SERVICES.

SEWER SERVICE SUMMARY

LOT No.	STATION & OFFSET	SIZE/TYPE	REMARKS
2	10+82.7, 14.0' LT	4" PVC	SEE NOTE 1
3	11+16.6, 14.0' LT	4" PVC	SEE NOTE 1
4	11+71.4, 14.0' LT	4" PVC	SEE NOTE 1
5	12+02.3, 14.0' LT	4" PVC	SEE NOTE 1
6	12+52.1, 14.0' LT	4" PVC	SEE NOTE 1
7	11+38.0, 14.5' RT	4" PVC	NEW SERVICE
8	11+98.0, 14.5' RT	4" PVC	NEW SERVICE
9	15+01.5, 14.5' RT	4" PVC	NEW SERVICE
10	14+41.4, 14.5' RT	4" PVC	NEW SERVICE
11	15+27.7, 14.0' LT	4" PVC	SEE NOTE 1
12	15+07.9, 14.0' LT	4" PVC	SEE NOTE 1
13	14+77.6, 14.0' LT	4" PVC	SEE NOTE 1
14	14+22.8, 14.0' LT	4" PVC	SEE NOTE 1
15	13+92.1, 14.0' LT	4" PVC	SEE NOTE 1

NOTES:

1. SEWER SERVICE LOCATIONS SHOWN ARE FROM LIMITED AS-BUILT INFORMATION AND WERE NOT FIELD LOCATED. EXISITNG 4" PVC SEWER SERVICES EXIST FOR LOTS 2-6 AND LOTS 11-15. CONTRACTOR SHALL FIELD LOCATE ALL SEWER SERVICES TO CONFIRM FINAL LOCATION FOR NEW SEWER SERVICE CLEANOUT INSTALLATION. STATION & OFFSET ARE GIVEN TO THE CENTER OF THE NEW CLEANOUT LID. IF EXISTING SANITARY SEWER SERVICES FOUND TO BE IN GOOD CONDITION CONTRACTOR MAY KEEP THEM IN SERVICE.
2. CONSTRUCT NEW 4" PVC SEWER SERVICE AND INSTALL NEW CLEANOUT NEAR PROPERTY LINE PER CBJ STANDARD DETAIL 213 AND CONNECT TO EXISTING SEWER SERVICE.
3. ADJUST SEWER SERVICE SLOPE TO PROVIDE MAXIMUM SEPARATION BETWEEN UTILITY CROSSINGS. INSTALL SWEEPS AS REQUIRED UPON APPROVAL OF THE ENGINEER.

STORM DRAIN STRUCTURE FRAME & GRATE SUMMARY

STRUCTURE No.	EAST JORDAN, OLYMPIC FOUNDRY Co., CBJ STANDARD No., OR APPROVED EQUAL
S-1	OLYMPIC FOUNDARY MH34SC

P:\2020\20098JN-Bicknell_Delta\CC0002cns\20098JN.dwg PLOT: December 03, 2020 at: 3:58pm Micki.Mirisch

DESIGN MSM
DRAWN MSM
CHECK JMP
APPROVED JMP
FILE:

No.	DATE	REVISION	BY	APRVD.

DELTA DRIVE SUBDIVISION
LOCATED IN DELTA JUNCTION

BICKNELL INC. QUALITY CONSTRUCTION

STATE OF ALASKA 49TH Joseph M. Pusich CE 8152 REGISTERED PROFESSIONAL ENGINEER 12/03/20

PDC ENGINEERS
PLAN • DESIGN • CONSTRUCT
A BESPEC COMPANY
907.780.6060 | AECC605

SUMMARY TABLES

DATE: Dec 03, 2020
PDC No. 20098JN
SHEET C003

SURVEY NOTES

1. THE PURPOSE OF THIS SURVEY IS TO PROVIDE A TOPOGRAPHIC DESIGN SURVEY OF THE DELTA DRIVE DEVELOPMENT.
2. THE FIELD SURVEYS WERE PERFORMED ON MAY 26-27, 2020.
3. THE SURVEY EQUIPMENT UTILIZED DURING THIS SURVEY WAS TRIMBLE R8-2 GNSS ROVER AND BASE AND A TRIMBLE S-7 ROBOTIC TOTAL STATION UTILIZING STANDARD LASER MEASURING TECHNIQUES.
4. ALL DISTANCES AND DIMENSIONS ARE IN U.S. SURVEY FEET AND REDUCED TO THEIR HORIZONTAL VALUES.
5. CONTROL AND MONUMENT COORDINATES ARE IN AN ASSUMED LOCAL COORDINATE SYSTEM.
6. ELEVATIONS ARE IN AN ASSUMED LOCAL VERTICAL DATUM.
7. CONTOURS ARE SHOWN AT 1-FOOT INTERVALS.
8. ALL UTILITIES WERE LOCATED BY PDC AND ARE BASED ON OBSERVABLE EVIDENCE AND ABOVE GROUND APPURTENANCES AND FIELD RETRACEMENT PERFORMED BY PDC.
9. THIS SURVEY DOES NOT CONSTITUTE A SUBDIVISION AS PER ALASKA STATUTE 40.15.900(5)(a).

EXIST. SSCO	(CO1)
STA 10+04.9,	33.3 LT
EXIST. LID EL=	97.31
SW 8" (OUT) IE=	94.81

EXIST. SSMH	(M1)
STA 08+90.8,	25.9 RT
EXIST. LID EL=	98.50
E 6" (IN) IE=	92.94
NW 8" (OUT) IE=	92.84

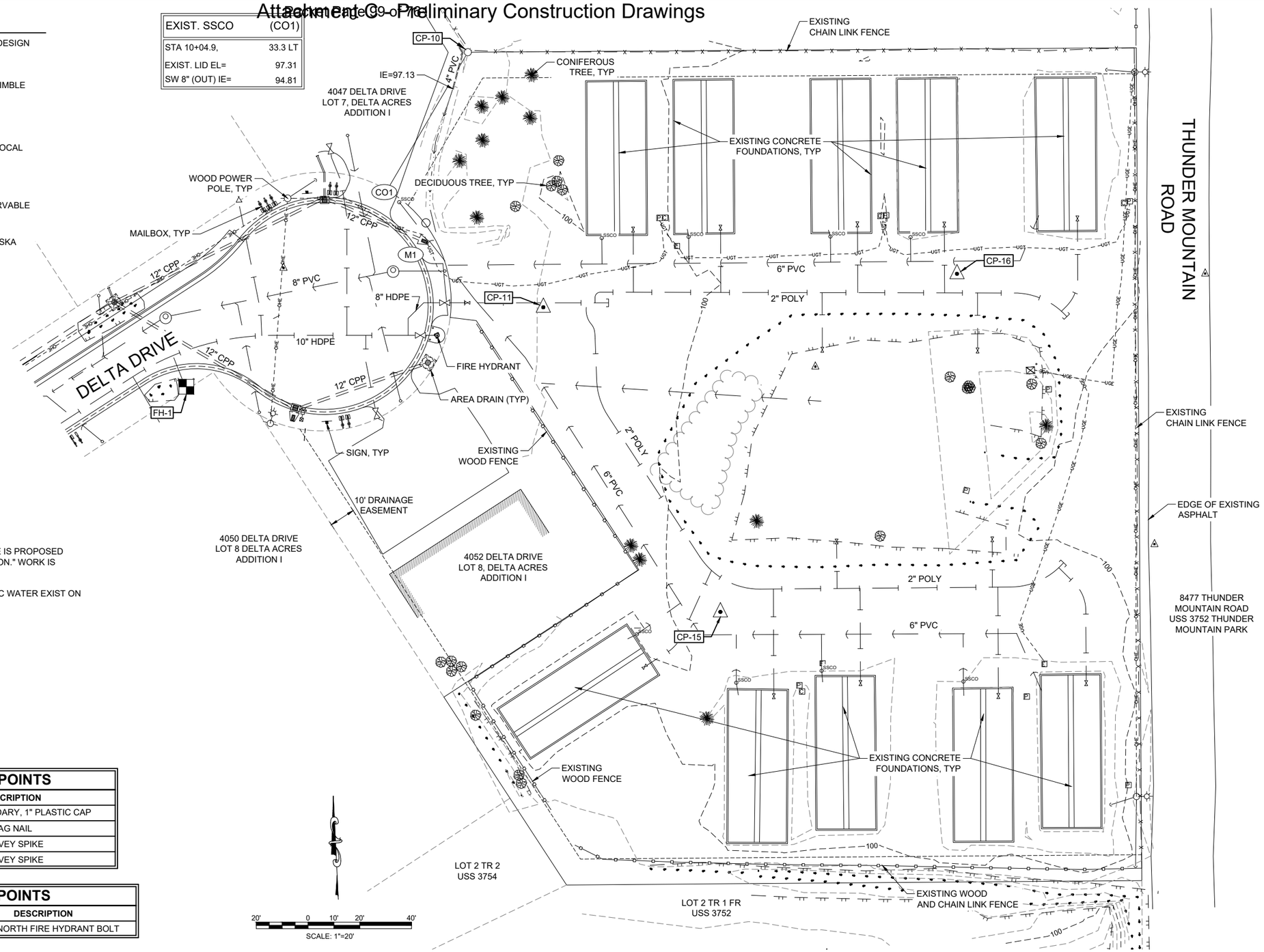

NOTES:
1. ROADWAY AND UTILITY INFORMATION SHOWN ON DELTA DRIVE IS PROPOSED FROM CBJ CONTRACT BE21-028 "DELTA DRIVE RECONSTRUCTION." WORK IS SCHEDULED FOR SPRING/SUMMER 2021.
2. EXISTING 6" PVC SEWER MAIN AND 2" POLY PIPE FOR DOMESTIC WATER EXIST ON SITE.

TABLE OF HORIZONTAL CONTROL POINTS

POINT #	NORTHING	EASTING	DESCRIPTION
CP 10	10112.63	10356.34	S-3650, SECONDARY, 1" PLASTIC CAP
CP 11	10014.23	10385.34	MAG NAIL
CP 15	9896.49	10453.74	SURVEY SPIKE
CP 16	10027.18	10545.16	SURVEY SPIKE

TABLE OF VERTICAL CONTROL POINTS

POINT #	NORTHING	EASTING	ELEVATION	DESCRIPTION
FH-1	9983.52	10247.42	100.44'	"X" ON NORTH FIRE HYDRANT BOLT

P:\2020\20098JN-Bicknell_Delta\CIC\2001cns\20098JN.dwg, PLOT: December 03, 2020 at: 3:58pm Micki Minsch

DESIGN MSM
DRAWN MSM
CHECK JMP
APPROVED JMP
FILE:

No.	DATE	REVISION	BY	APRVD.

DELTA DRIVE SUBDIVISION
LINEAU AK

BICKNELL INC. QUALITY CONSTRUCTION

STATE OF ALASKA 49TH Joseph M. Pusich CE 8152 REGISTERED PROFESSIONAL ENGINEER 12/03/20

PDC ENGINEERS
PLAN • DESIGN • CONSTRUCT
A ASPEC COMPANY
907.780.6060 | AECC605
1001 Vandenberg Circle, Suite 1, Juneau, AK 99801

EXISTING SITE CONDITIONS

DATE: Dec 03, 2020
PDC No. 20098JN
SHEET C004

Attachment C - Preliminary Construction Drawings

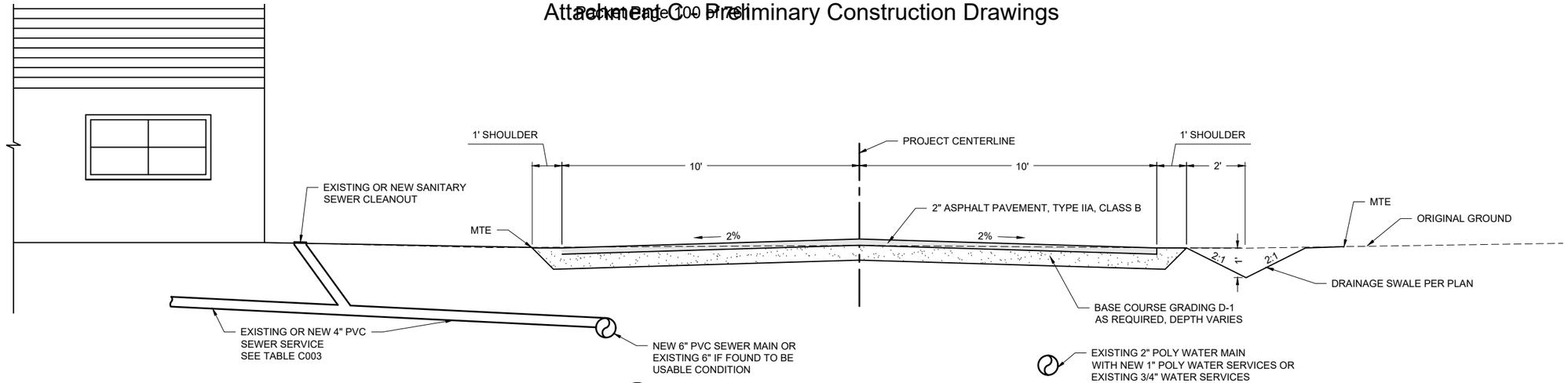

1 / 100 ROADWAY TYPICAL SECTION

SCALE: NTS

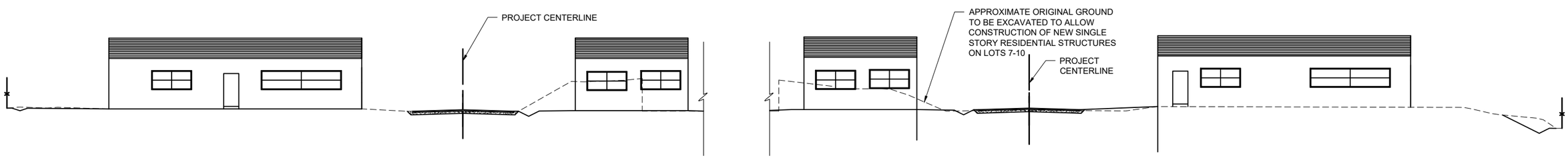

2 / C100 SITE TYPICAL SECTION

SCALE: NTS

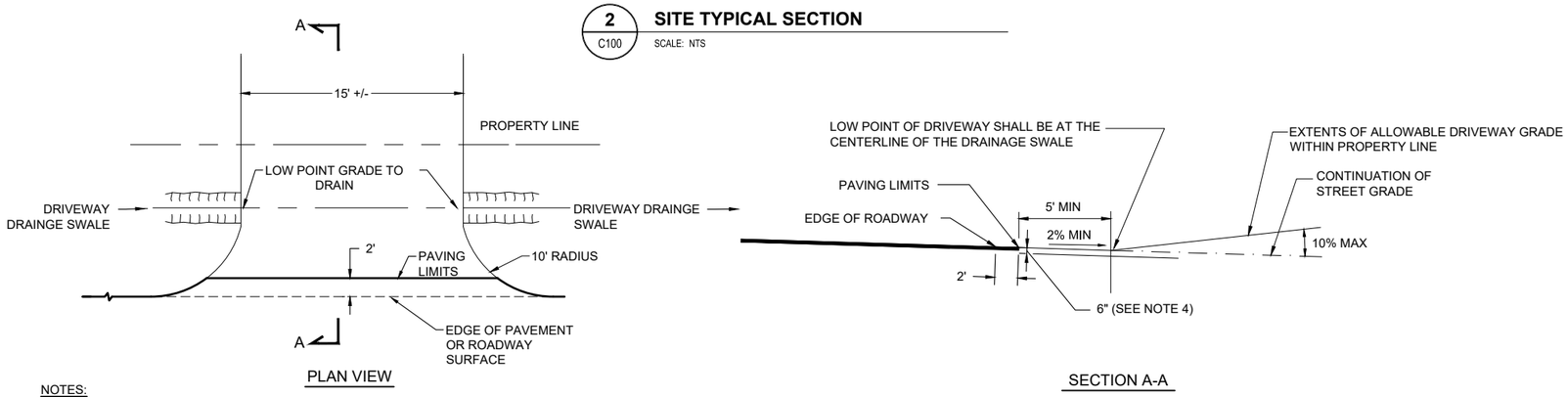

NOTES:

1. PAVING LIMIT FOR DRIVEWAYS SHALL BE 2' FROM THE EDGE OF ROADWAY OR AS APPROVED BY THE ENGINEER.
2. DRIVEWAY SWALE SHALL BE GRADED TO DRAIN INTO DRAINAGE SWALE

3 / C100 TYPICAL DRIVEWAY SWALE DETAIL

SCALE: NTS

SHEET C100 NOTES:

1. EXISTING 2" POLY WATER LINE WILL BE FLUSHED, DISINFECTED AND PRESSURE TESTED IN ACCORDANCE WITH CBJ STANDARD SPECIFICATIONS TO ENSURE COMPLIANCE WITH PUBLIC DRINKING WATER REGULATIONS.

P:\2020\20098JN-Bicknell_Delta\CIC3001\ms\20098JN.dwg PLOT: December 03, 2020at: 3:59pm Micki Minsch

DESIGN	MSM
DRAWN	MSM
CHECK	JMP
APPROVED	JMP
FILE:	

No.	DATE	REVISION	BY	APRVD.

DELTA DRIVE SUBDIVISION

DELTA JUNCTION, AK

BICKNELL INC. QUALITY CONSTRUCTION

STATE OF ALASKA 749TH Joseph M. Pusich CE 8152 REGISTERED PROFESSIONAL ENGINEER 12/03/20

PDC ENGINEERS
PLAN • DESIGN • CONSTRUCT
A BESPEC COMPANY
907.780.6060 | AECC605

TYPICAL SECTIONS

DATE: Dec 03, 2020
PDC No. 20098JN

SHEET C100

Attachment C - Page 104 of 261

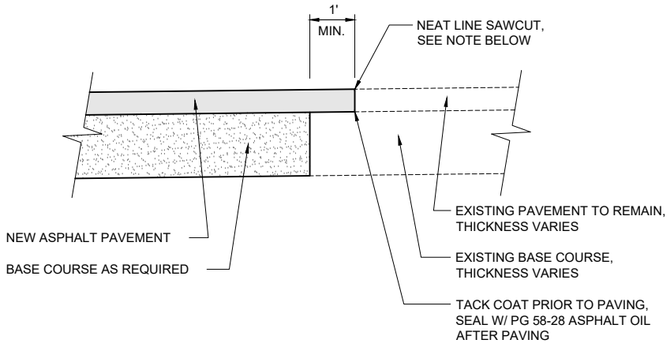

NOTE:
SAWCUT OF EXISTING PAVEMENT SHALL NOT BE MADE UNTIL 24 HOURS PRIOR TO FINAL PAVING.

1 / C101 PAVEMENT MATCH DETAIL
SCALE: NTS

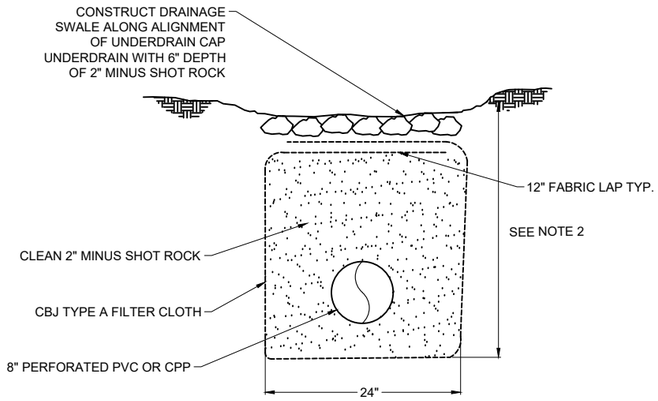

NOTES:
1. OUTFALL CONNECTIONS TO DAYLIGHT NEAR CULVERT INLETS PER PLAN.
2. DEPTH OF UNDERDRAIN VARIES, MIN SLOPE=0.50%

2 / C101 8" UNDERDRAIN DETAIL
SCALE: NTS

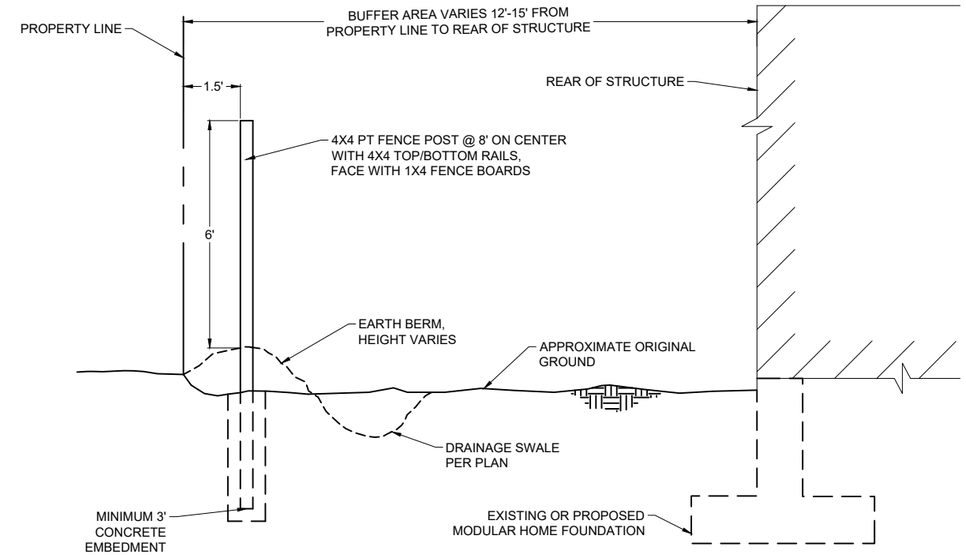

3 / C101 TYPICAL FENCE AT REAR OF DWELLING
SCALE: 1"=2'

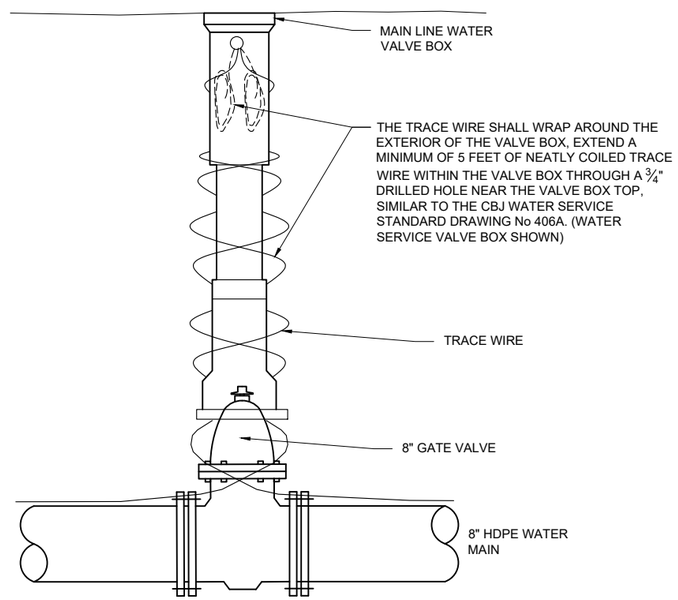

4 / C101 MAIN LINE VALVE TRACE WIRE TERMINATION DETAIL
SCALE: NTS

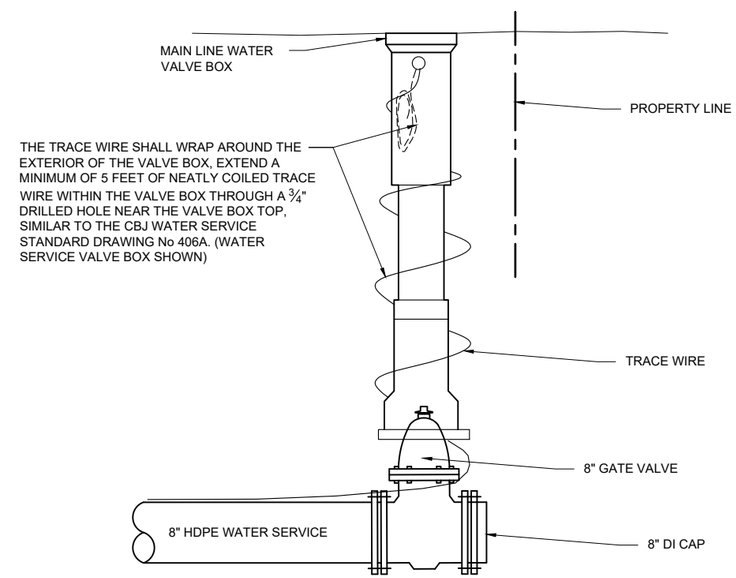

5 / C101 WATER SERVICE VALVE TRACE WIRE TERMINATION DETAIL
SCALE: NTS

P:\2020\20098JN-Bicknell_Delta\CIC\3001cns\20098JN.dwg, PLOT: December 03, 2020 at: 3:59pm Msk\ Msch

DESIGN MSM
DRAWN MSM
CHECK JMP
APPROVED JMP
FILE:

No.	DATE	REVISION	BY	APRVD.

DELTA DRIVE SUBDIVISION

LOCATED IN:
T. 14 N., R. 1 E., S.M., ALASKA

STATE OF ALASKA 49TH Joseph M. Pusich CE 8152 REGISTERED PROFESSIONAL ENGINEER 12/03/20

PDC ENGINEERS
PLAN • DESIGN • CONSTRUCT
A RESPEC COMPANY
907.780.6060 | AECC605
1000 Fairbanks Street, Suite 201, Fairbanks, AK 99701

CONSTRUCTION DETAILS

DATE: Dec 03, 2020
PDC No. 20098JN

SHEET
C101

Attachment C Page 102 of 261

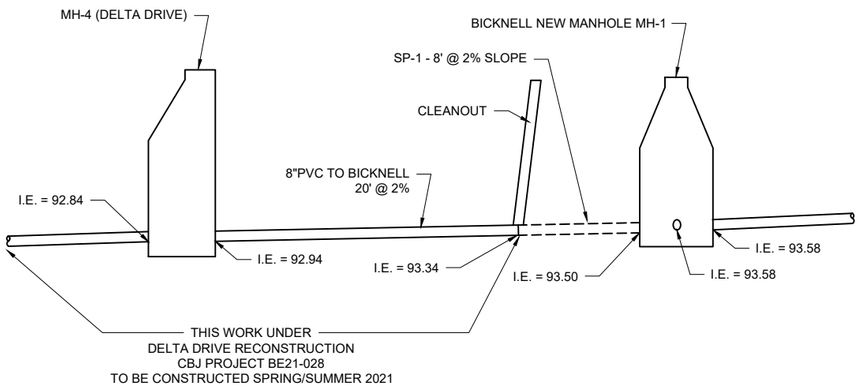

1 / C102 **SEWER PROFILE CONNECTION**

SCALE: NTS

DESIGN MSM
DRAWN MSM
CHECK JMP
APPROVED JMP
FILE:

No.	DATE	REVISION	BY	APRVD.

DELTA DRIVE SUBDIVISION

BICKNELL INC. QUALITY CONSTRUCTION

STATE OF ALASKA 40TH Joseph M. Pusich CE 8152 NORTHERN REGIONAL ENGINEER 12/03/20

PDC ENGINEERS
PLAN • DESIGN • CONSTRUCT
A BESPEC COMPANY
907.780.6060 | AECC605

CONSTRUCTION DETAILS

DATE Dec 03, 2020
PDC No. 20098JN

SHEET C102

P:\2020\20098JN-Bicknell_Delta\CIC\3001cnst\20098JN.dwg PLOT: December 03, 2020 at: 3:59pm Mick Mirsch

DIAL BEFORE YOU DIG!
586-1333
U/G POWER, TELEPHONE & T.V. SHOWN ON THIS DRAWING INDICATE EXISTENCE ONLY AND DO NOT SUBSTITUTE FOR FIELD LOCATES
FOR ACS AND GCI LOCATES DIAL THE 811 ALASKA DIGLINE

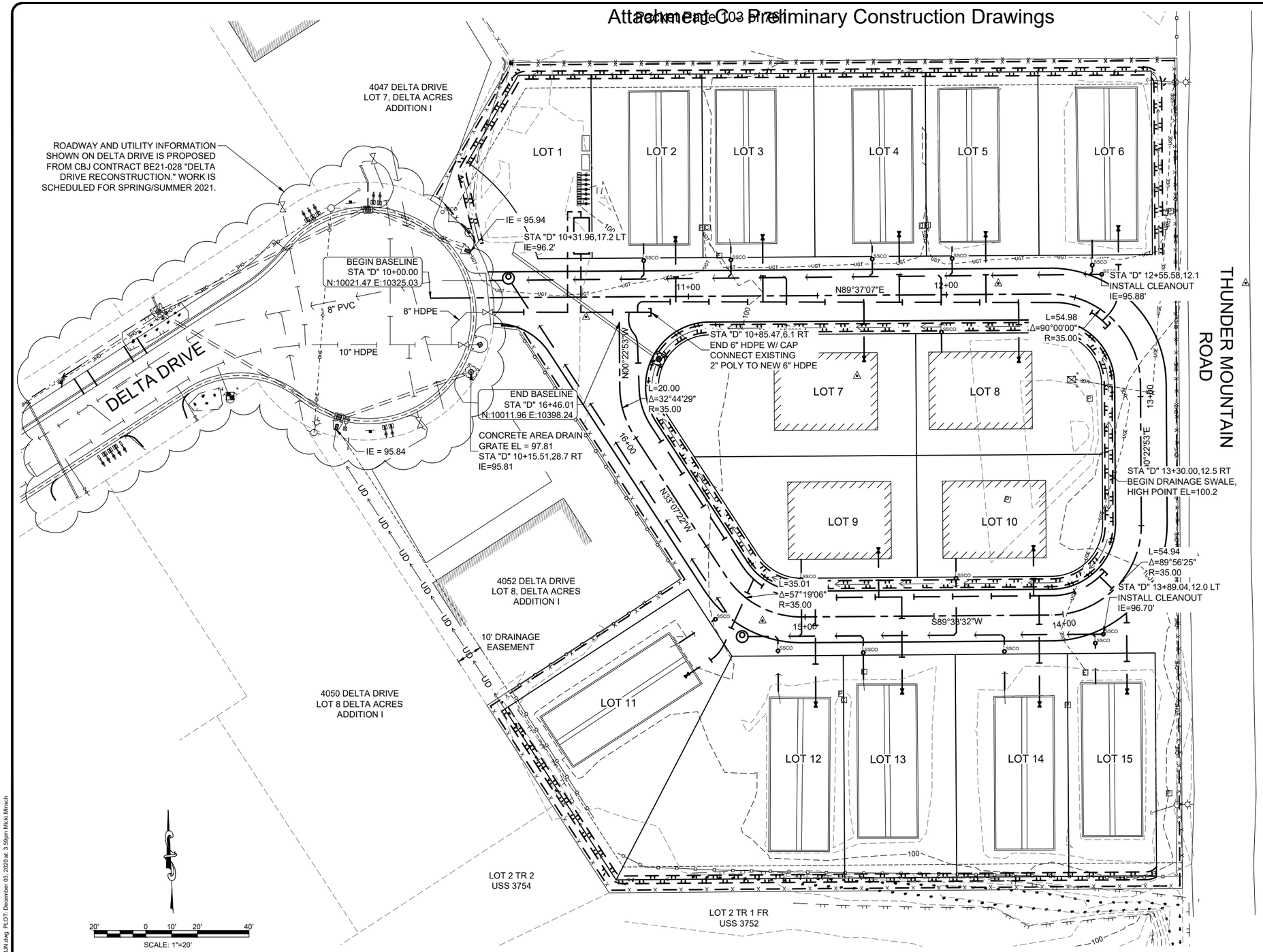

DESIGN MSM				
DRAWN MSM				
CHECK JMP				
APPROVED JMP				
FILE:	No.	DATE	REVISION	BY	APRVD.

DELTA DRIVE SUBDIVISION

LINEAU, LLC

BICKNELL INC. QUALITY CONSTRUCTION

STATE OF ALASKA 49TH Joseph M. Pusich CE 8152 12/03/20

PDC ENGINEERS
PLAN • DESIGN • CONSTRUCT
A BESPEC COMPANY
9101 Vanderbilt Circle, Juneau, AK 99801
907.780.6060 | AECC605

OVERALL SITE PLAN

DATE: Dec 03, 2020
PDC No. 20098JN

SHEET
C200

P:\2020\20098JN-Bicknell_Delta\C\C200 rsrs\20098JN.dwg PLOT: December 03, 2020 at: 3:59pm Micki.Minsch

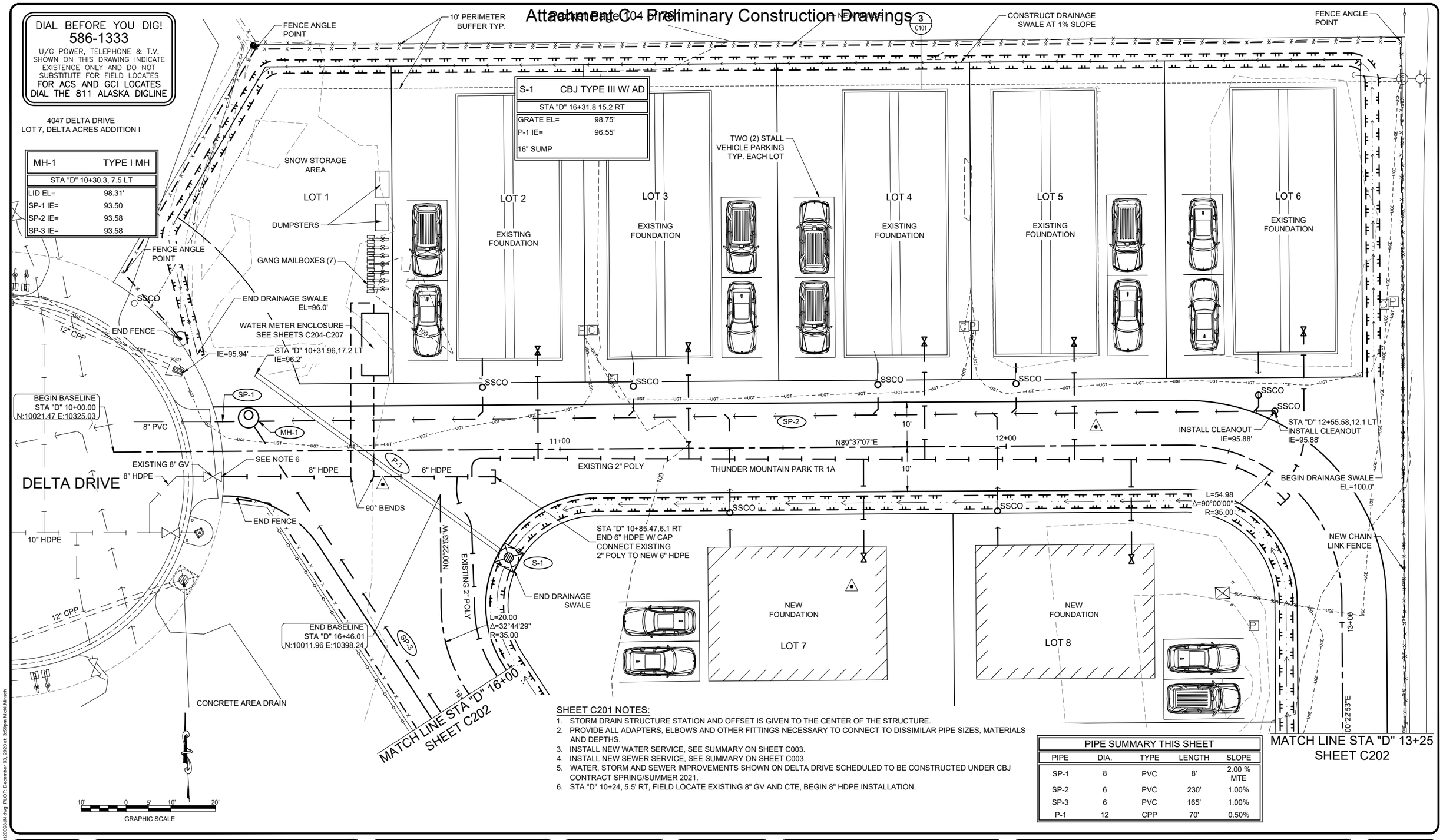

SHEET C201 NOTES:

1. STORM DRAIN STRUCTURE STATION AND OFFSET IS GIVEN TO THE CENTER OF THE STRUCTURE.
2. PROVIDE ALL ADAPTERS, ELBOWS AND OTHER FITTINGS NECESSARY TO CONNECT TO DISSIMILAR PIPE SIZES, MATERIALS AND DEPTHS.
3. INSTALL NEW WATER SERVICE, SEE SUMMARY ON SHEET C003.
4. INSTALL NEW SEWER SERVICE, SEE SUMMARY ON SHEET C003.
5. WATER, STORM AND SEWER IMPROVEMENTS SHOWN ON DELTA DRIVE SCHEDULED TO BE CONSTRUCTED UNDER CBJ CONTRACT SPRING/SUMMER 2021.
6. STA "D" 10+24, 5.5' RT, FIELD LOCATE EXISTING 8" GV AND CTE, BEGIN 8" HDPE INSTALLATION.

PIPE SUMMARY THIS SHEET

PIPE	DIA.	TYPE	LENGTH	SLOPE
SP-1	8	PVC	8'	2.00 % MTE
SP-2	6	PVC	230'	1.00%
SP-3	6	PVC	165'	1.00%
P-1	12	CPP	70'	0.50%

P:\2020\20098JN-Bicknell_Delta\DC\20010ms\20098JN.dwg PLOT: December 03, 2020 at: 3:59pm Mickl.Mmsch

DESIGN MSM
DRAWN MSM
CHECK JMP
APPROVED JMP
FILE:

No.	DATE	REVISION	BY	APRVD.

DELTA DRIVE SUBDIVISION

BICKNELL INC. QUALITY CONSTRUCTION

STATE OF ALASKA 49TH Joseph M. Pusich CE 8152 12/03/20

PDC ENGINEERS
PLAN • DESIGN • CONSTRUCT
A BESPEC COMPANY
907.780.6060 | AECC605

SITE & UTILITY PLAN

DATE: Dec 03, 2020
PDC No. 20098JN
SHEET C201

SHEET C202 NOTES:

1. STORM DRAIN STRUCTURE STATION AND OFFSET IS GIVEN TO THE CENTER OF THE STRUCTURE. FRAME ELEVATION IS GIVEN TO THE TOP, FRONT OF FRAME.
2. PROVIDE ALL ADAPTERS, ELBOWS AND OTHER FITTINGS NECESSARY TO CONNECT TO DISSIMILAR PIPE SIZES, MATERIALS AND DEPTHS.
3. INSTALL NEW WATER SERVICE, SEE SUMMARY ON SHEET C003.
4. INSTALL NEW SEWER SERVICE, SEE SUMMARY ON SHEET C003.

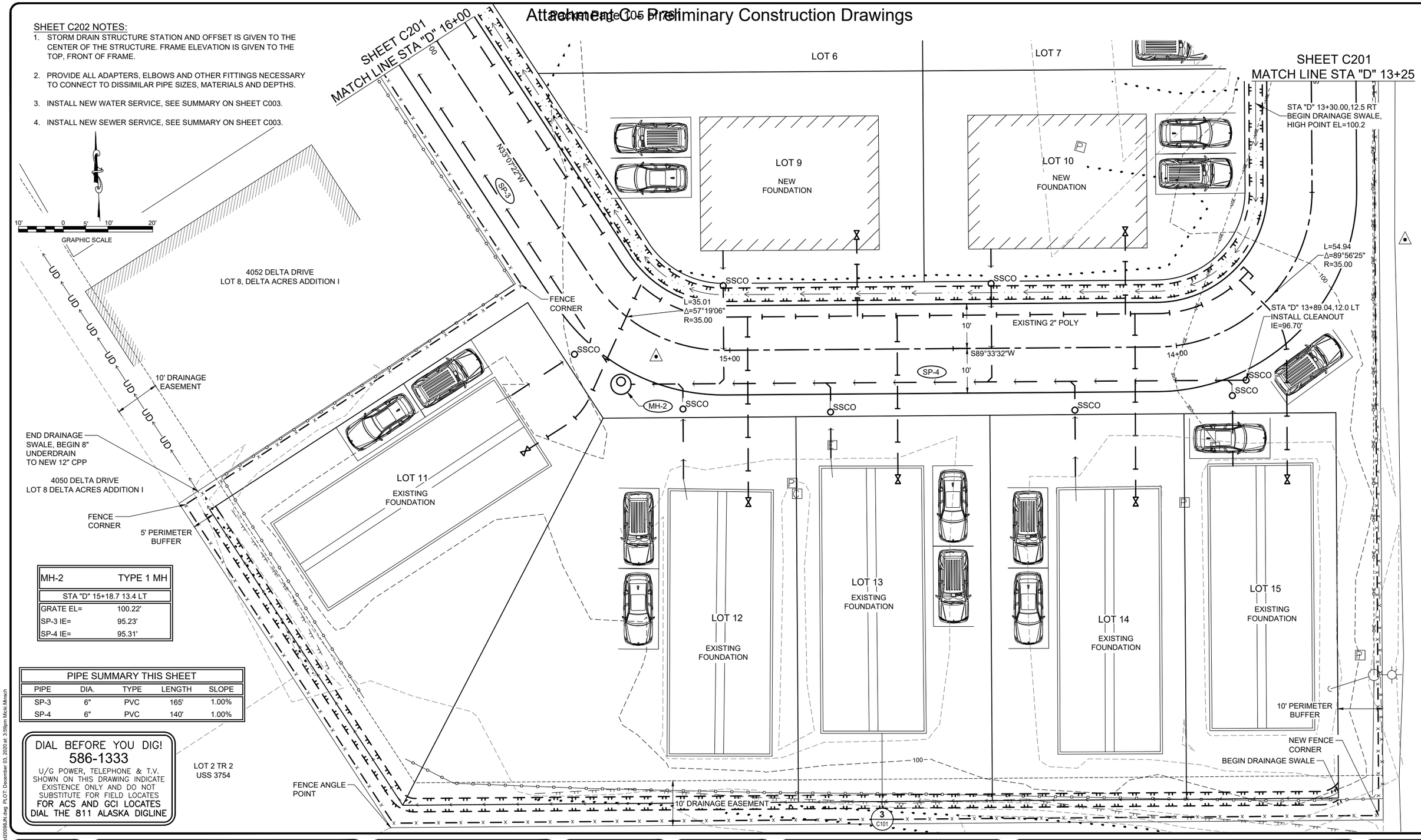

MH-2	TYPE 1 MH
STA "D" 15+18.7 13.4 LT	
GRATE EL=	100.22'
SP-3 IE=	95.23'
SP-4 IE=	95.31'

PIPE SUMMARY THIS SHEET				
PIPE	DIA.	TYPE	LENGTH	SLOPE
SP-3	6"	PVC	165'	1.00%
SP-4	6"	PVC	140'	1.00%

DIAL BEFORE YOU DIG!
586-1333
U/G POWER, TELEPHONE & T.V. SHOWN ON THIS DRAWING INDICATE EXISTENCE ONLY AND DO NOT SUBSTITUTE FOR FIELD LOCATES
FOR ACS AND GCI LOCATES
DIAL THE 811 ALASKA DIGLINE

P:\2020\20098JN-Bicknell_Delta\CC2001cna\20098JN.dwg PLOT: December 03, 2020 at: 3:59pm Micki Minsch

DESIGN MSM
DRAWN MSM
CHECK JMP
APPROVED JMP
FILE:

No.	DATE	REVISION	BY	APRVD.

DELTA DRIVE SUBDIVISION
LINEAU AK

BICKNELL INC. QUALITY CONSTRUCTION

STATE OF ALASKA 49TH Joseph M. Pusich CE 8152 REGISTERED PROFESSIONAL ENGINEER 12/03/20

PDC ENGINEERS
PLAN • DESIGN • CONSTRUCT
A BESPEC COMPANY
907.780.6060 | AECC605

SITE & UTILITY PLAN

DATE: Dec 03, 2020
PDC No. 20098JN
SHEET C202

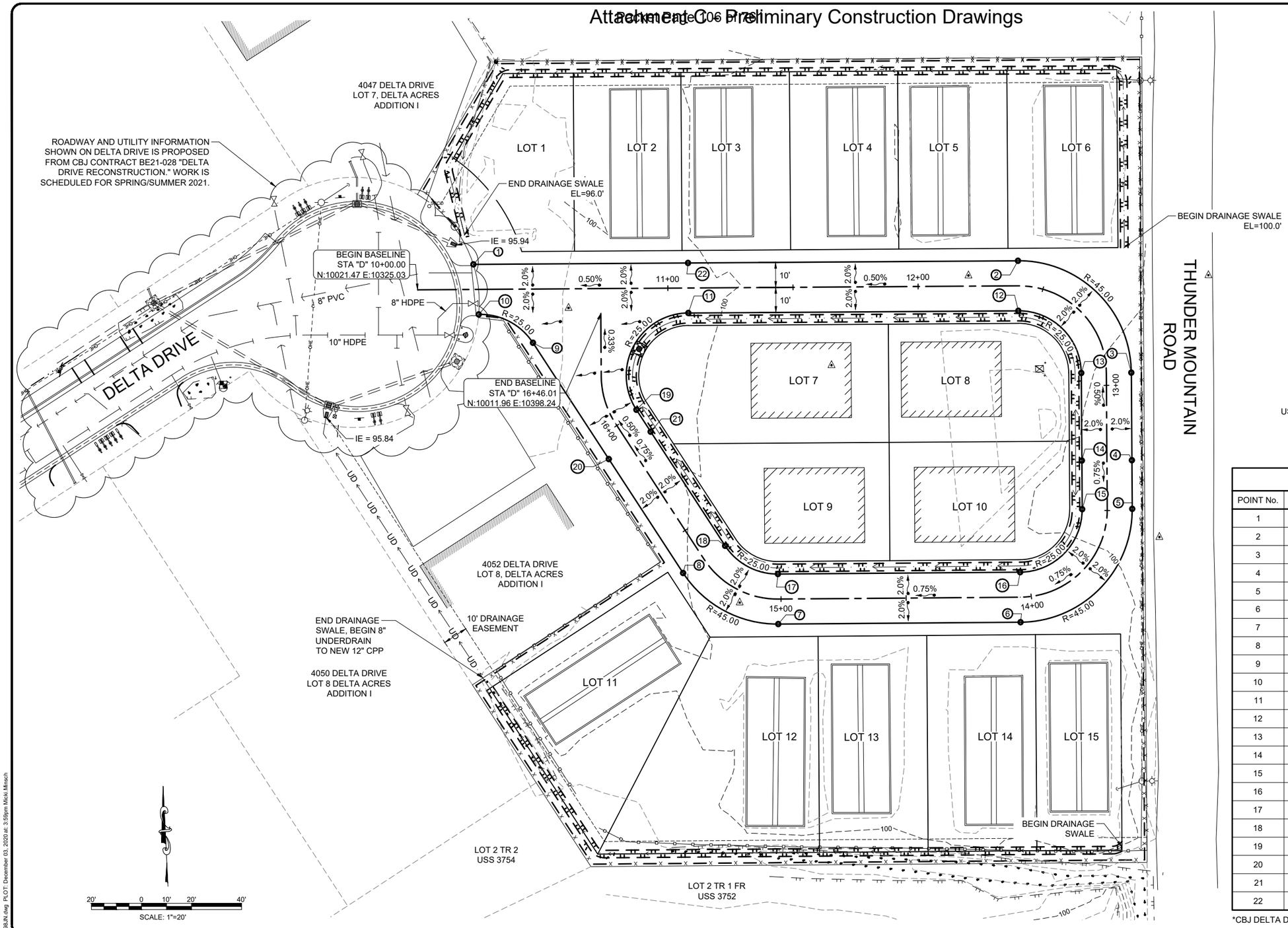

DIAL BEFORE YOU DIG!
586-1333
U/G POWER, TELEPHONE & T.V. SHOWN ON THIS DRAWING INDICATE EXISTENCE ONLY AND DO NOT SUBSTITUTE FOR FIELD LOCATES
FOR ACS AND GCI LOCATES DIAL THE 811 ALASKA DIGLINE

GRADE POINT SUMMARY TABLE THIS SHEET

POINT No.	NORTHING	EASTING	ELEVATION	DESCRIPTION
1	10031.62	10347.33	98.29 *	EDGE OF PAVEMENT/MTE
2	10033.07	10564.96	100.32	EDGE OF PAVEMENT/PC
3	9988.37	10610.26	100.88	EDGE OF PAVEMENT/PT
4	9953.35	10610.49	101.24	EDGE OF PAVEMENT/HIGH POINT
5	9933.92	10610.62	101.09	EDGE OF PAVEMENT/PC
6	9888.64	10565.97	100.68	EDGE OF PAVEMENT/PT
7	9887.89	10469.17	99.97	EDGE OF PAVEMENT/PC
8	9908.30	10431.14	99.67	EDGE OF PAVEMENT/PT
9	10000.30	10371.11	98.59	EDGE OF PAVEMENT/PC
10	10011.64	10349.47	98.34 *	EDGE OF PAVEMENT/PT/MTE
11	10012.19	10433.23	99.66	EDGE OF PAVEMENT/PT
12	10013.07	10565.10	100.32	EDGE OF PAVEMENT/PC
13	9988.24	10590.26	100.88	EDGE OF PAVEMENT/PT
14	9953.22	10590.50	101.24	EDGE OF PAVEMENT/HIGH POINT
15	9933.79	10590.62	101.09	EDGE OF PAVEMENT/PC
16	9908.64	10565.82	100.68	EDGE OF PAVEMENT/PT
17	9907.89	10469.02	99.97	EDGE OF PAVEMENT/PC
18	9919.17	10447.92	99.67	EDGE OF PAVEMENT/PT
19	9973.53	10412.46	99.19	EDGE OF PAVEMENT/PC
20	9953.85	10401.42	99.29	EDGE OF PAVEMENT
21	9964.78	10418.17	99.29	EDGE OF PAVEMENT
22	10032.19	10433.09	99.66	EDGE OF PAVEMENT

*CBJ DELTA DRIVE RECONSTRUCTION TOP OF ASPHALT PAVEMENT ELEVATION

P:\2020\20098JN-Bicknell_Delta\CIC\2001ms\20098JN.dwg PLOT: December 03, 2020 at: 3:59pm Mickl.Mmsch

DESIGN MSM
DRAWN MSM
CHECK JMP
APPROVED JMP
FILE:

No.	DATE	REVISION	BY	APRVD.

DELTA DRIVE SUBDIVISION
JUNEAU, AK

BICKNELL INC. QUALITY CONSTRUCTION

STATE OF ALASKA 49TH Joseph M. Pusich CE 8152 REGISTERED PROFESSIONAL ENGINEER 12/03/20

PDC ENGINEERS
PLAN • DESIGN • CONSTRUCT
A BESPEC COMPANY
907.780.6060 | AECC605

GRADING PLAN

DATE: Dec 03, 2020
PDC No. 20098JN
SHEET
C203

NOTES:

1. CBJ SPECIFICATION 02601 - WATER SYSTEM AND 02602 - VALVES, AND OTHER CBJ STANDARD SPECIFICATIONS APPLY EXCEPT AS MODIFIED BELOW.
2. ALL JOINTS BETWEEN THE CONNECTIONS TO THE MAINLINES ON BOTH SIDES OF THE METER ENCLOSURE SHALL BE RESTRAINED.
3. ALL BOLTS, NUTS AND WASHERS SHALL BE SERIES 300 STAINLESS STEEL.
4. ALL METALLIC VALVES AND FITTINGS SHALL BE FACTORY EPOXY COATED INSIDE AND OUT, 8 MILS MINIMUM.
5. BURIED FITTINGS SHALL BE THRUST BLOCKED PER CBJ STANDARD DETAILS.
6. DIP, HDPE PIPE AND PIPE STANDS ARE PER CBJ SECTION 02602.
7. ALL PIPE AND SPOOL PIECES ABOVE GRADE ARE TO BE FLANGED, WITH 125# FLANGES. USE A FLANGE ADAPTOR WITH THE CONNECTION TO HDPE.
8. GATE VALVES SHALL HAVE HAND WHEELS.
9. PRESSURE GAUGE IS TO BE STAINLESS STEEL, GLYCERIN FILLED, WITH A 3½ OR 4-INCH FACE AND 150 TO 160 PSI PRESSURE RANGE.
10. THE GATE VALVE AHEAD OF THE METER IS TO BE FLXFL, WHILE THE VALVES ON EITHER SIDE OF THE DOUBLE CHECK MAY BE FLXVIC. VALVES SHALL COMPLY WITH AWWA C509 OR C515.
11. THE METER SHALL BE A 4-INCH NEPTUNE TRUFLO COMPOUND METER WITH A STRAINER.
12. THE DOUBLE CHECK VALVE SHALL BE A 6-INCH ZURN 350A WITH THE GATE VALVES, OR APPROVED EQUAL. THE DOUBLE CHECK SHALL MEET THE REQUIREMENTS OF AWWA C510 AND BE ASSE AND NSF LISTED.
13. TWO DUPLEX 120-V ELECTRICAL OUTLETS SHALL BE INSTALLED INSIDE THE ENCLOSURE. CONDUIT SHALL RUN FROM THE EXTERIOR MOUNTED DISCONNECT BOX NEAR THE ELECTORAL METER, UNDERGROUND, AND COME UP THROUGH THE CONCRETE SLAB. THE OUTLETS SHALL BE MOUNTED ABOVE THE FLOOR AND LOCATED FOR EASY ACCESS THROUGH THE PANELS.
14. ALL ELECTRICAL WORK SHALL BE PERFORMED BY A LICENSED ELECTRICIAN AND COMPLY WITH ALL APPROPRIATE ELECTRICAL CODES. ANY REQUIRED ELECTRICAL PERMITS SHALL BE OBTAINED. COORDINATE WITH THE LOCAL ELECTRICAL UTILITY AS NECESSARY AND PROVIDE ANY EQUIPMENT THEY REQUIRE TO COMPLETE THEIR SERVICE TO THIS LOCATION.

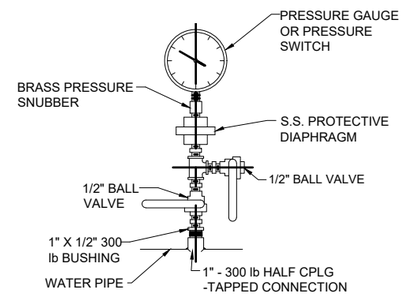

1 C204 **PRESSURE GAUGE OR SWITCH**
SCALE: NTS

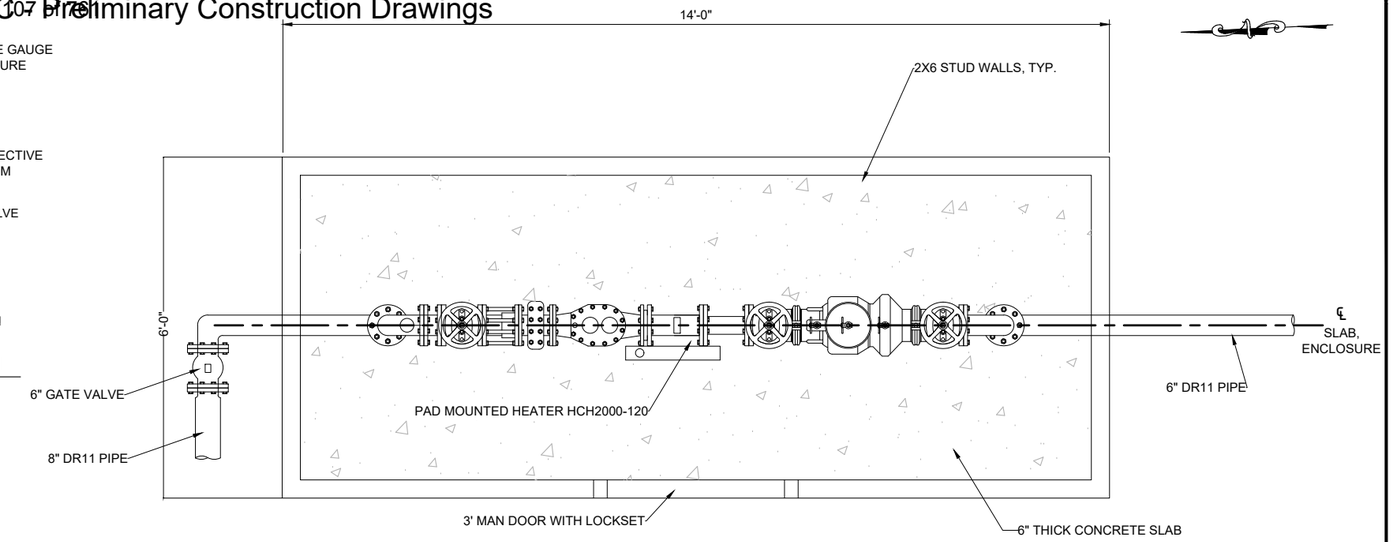

2 C204 **WATER METER ENCLOSURE - PLAN**
SCALE: NTS

NOTES:
1. ALL JOINTS TO BE FUSED, FLANGED, OR RESTRAINED TO WITHSTAND A MINIMUM PRESSURE OF 200 PSI.

DESIGNATION	COMPONENT DESCRIPTION
A	6X4" DI REDUCING 90° ELBOW W/ TAP AND 1" AIR RELEASE VALVE
B	4" NRS GATE VALVE
C	4" DISMANTLING JOINT, SET TO 8" ±
D	4" METER W/ STRAINER
E	4" DI PIPE SPOOL W/ 1" TAPPED CONNECTION, SAMPLING PORT, AND PRESSURE GAGUE (SEE DETAIL)
F	4" SPOOL PIECE
G	4" DOUBLE CHECK VALVE
H	4" DI 90° BEND

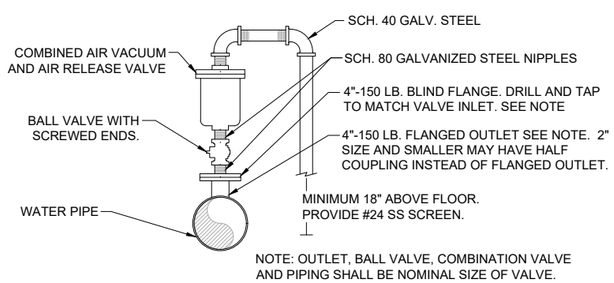

3 C204 **AIR/VACUUM & AIRE RELEASE VALVE ASSEMBLY**
SCALE: NTS

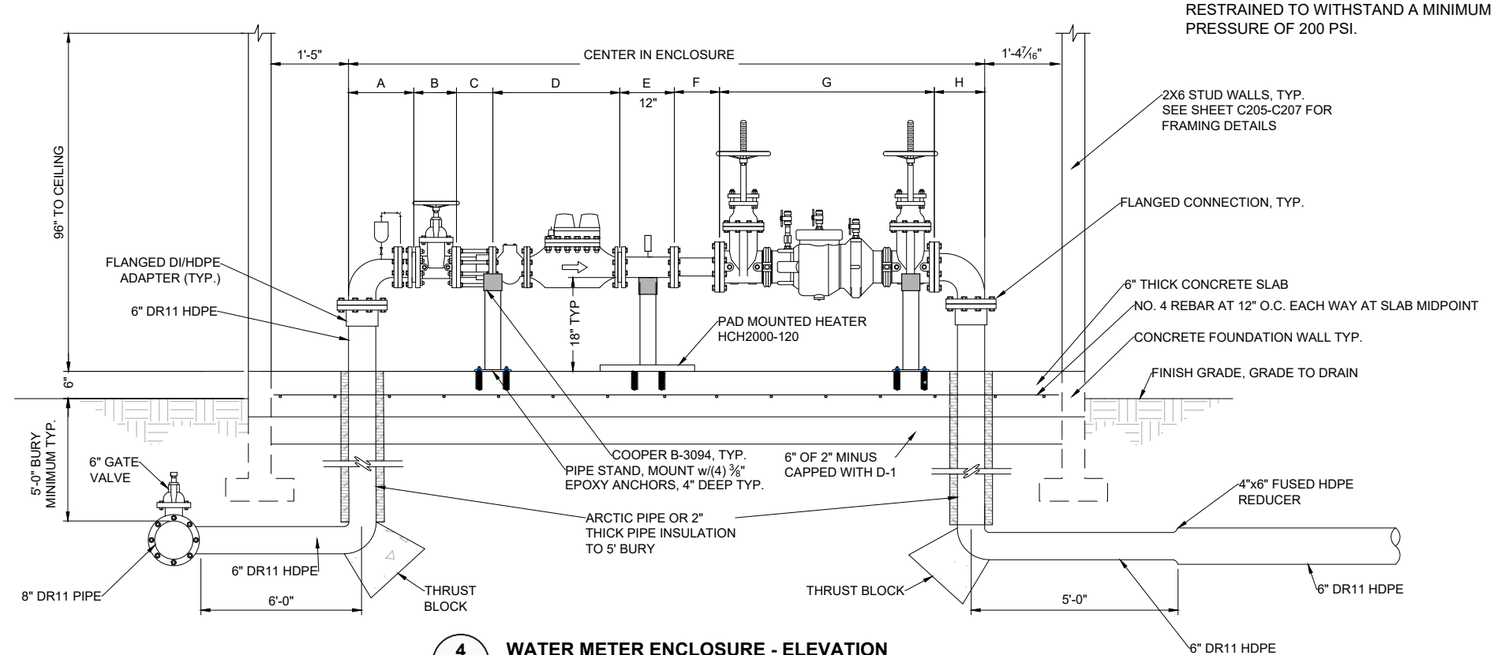

4 C204 **WATER METER ENCLOSURE - ELEVATION**
SCALE: NTS

DESIGN MSM
DRAWN MSM
CHECK JMP
APPROVED JMP
FILE:

No.	DATE	REVISION	BY	APRVD.

DELTA DRIVE SUBDIVISION

BICKNELL INC. QUALITY CONSTRUCTION

STATE OF ALASKA 49TH Joseph M. Pusich CE 8152 REGISTERED PROFESSIONAL ENGINEER 12/03/20

PDC ENGINEERS
PLAN • DESIGN • CONSTRUCT
A BESPEC COMPANY
907.780.6060 | AECC605

WATER METER ENCLOSURE DETAILS

DATE: Dec 03, 2020
PDC No. 20098JN
SHEET C204

P:\2020\20098JN-Bicknell_Delta\CC2001\cns\20098JN.dwg PLOT: December 03, 2020 at: 3:59pm Mick.Minsch

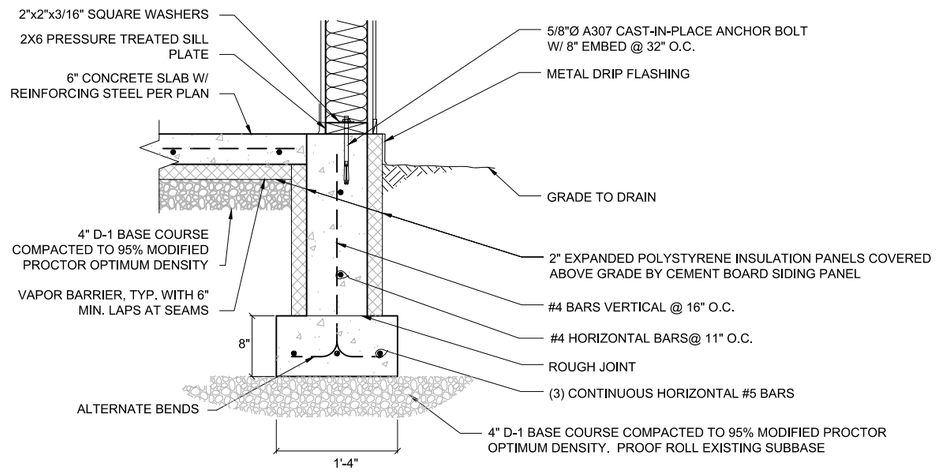

1 / C205 FOUNDATION AND STEM WALL DETAIL
SCALE: NTS

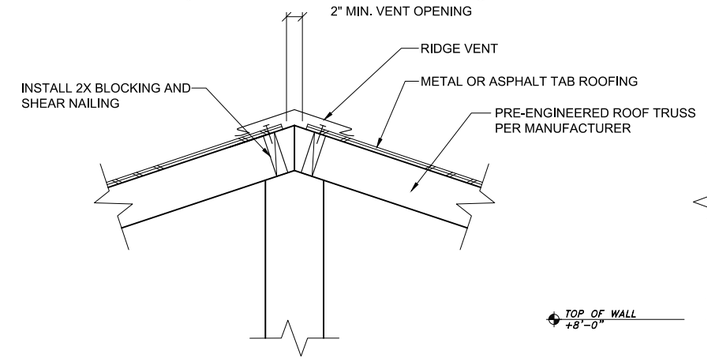

2 / C205 ROOF RIDGE VENT DETAIL
SCALE: NTS

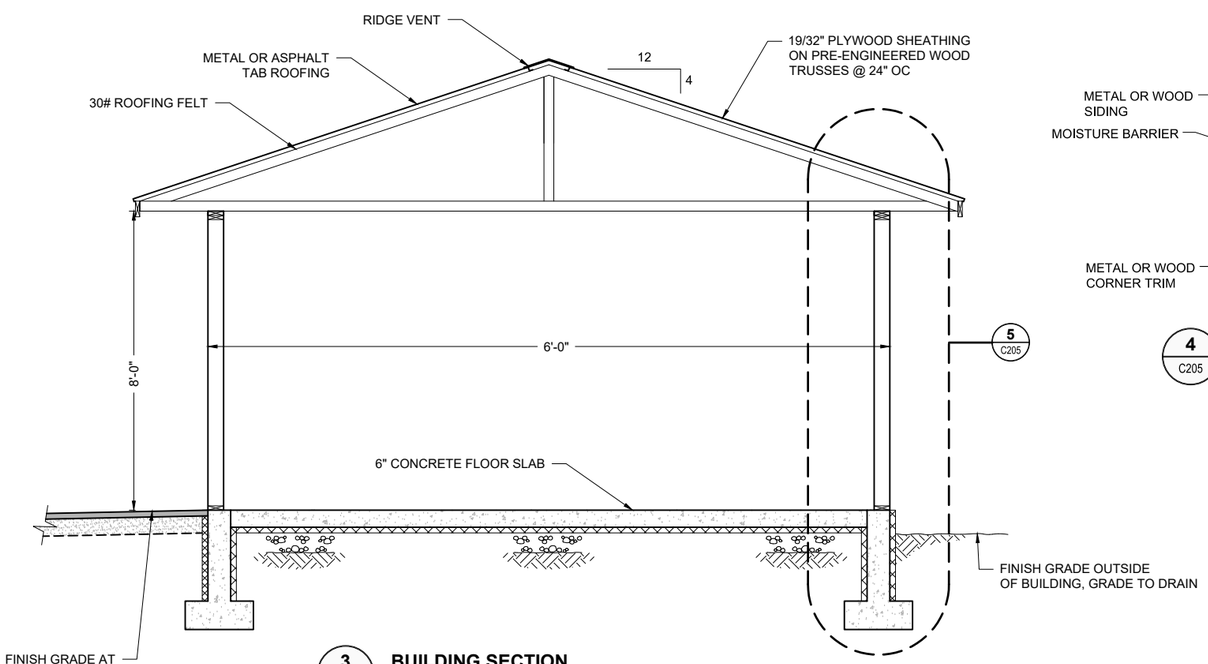

3 / C205 BUILDING SECTION
SCALE: NTS

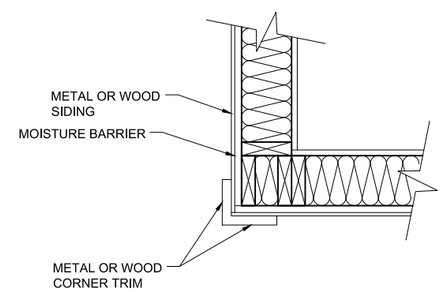

4 / C205 OUTSIDE CORNER DETAIL
SCALE: NTS

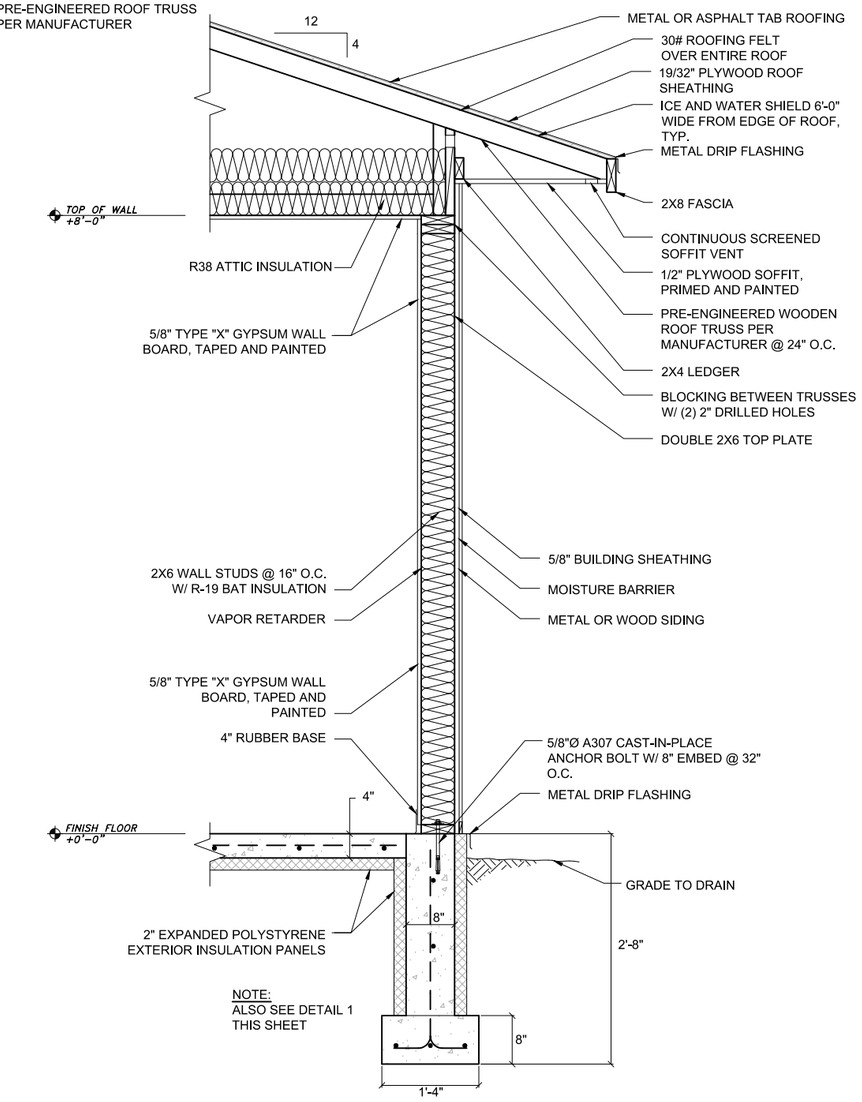

5 / C205 WALL SECTION
SCALE: NTS

DESIGN MSM
DRAWN MSM
CHECK JMP
APPROVED JMP
FILE:

No.	DATE	REVISION	BY	APRVD.

DELTA DRIVE SUBDIVISION
LINEAU AK

BICKNELL INC. QUALITY CONSTRUCTION

STATE OF ALASKA 49TH Joseph M. Pusich CE 8152 12/03/20

PDC ENGINEERS
PLAN • DESIGN • CONSTRUCT
A RESPEC COMPANY
907.780.6060 | AECC605

WATER METER ENCLOSURE DETAILS

DATE: Dec 03, 2020
PDC No. 20098JN
SHEET C205

P:\2020\20098JN-Bicknell_Delta\0C\2001cns\20098JN.dwg PLOT: December 03, 2020 at: 3:59pm Micki Minich

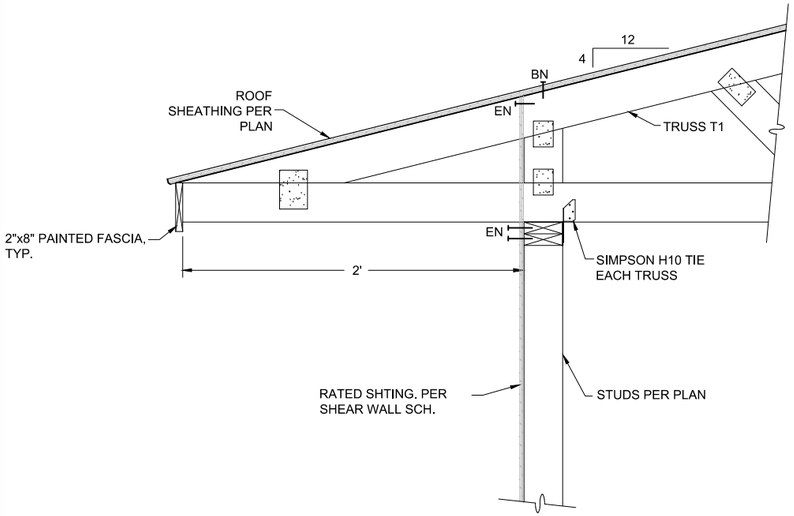

1 C206 **ROOF TRUSS TO WALL CONNECTION**

SCALE: NTS

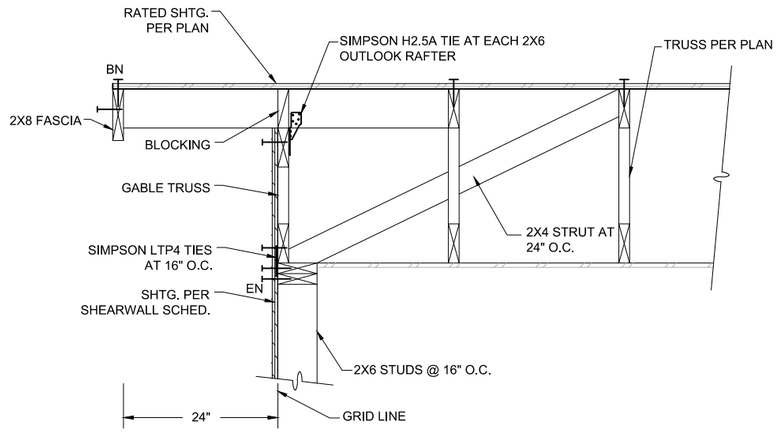

2 C206 **GABLE END DETAIL**

SCALE: NTS

NOTES:
1. WHERE NO STUD TO STUD NAILING IS INDICATED, NAIL STUDS TOGETHER w/ 16d @ 12"o.c., TYP.
2. REF. PLANS FOR STUD SIZE & SPACING

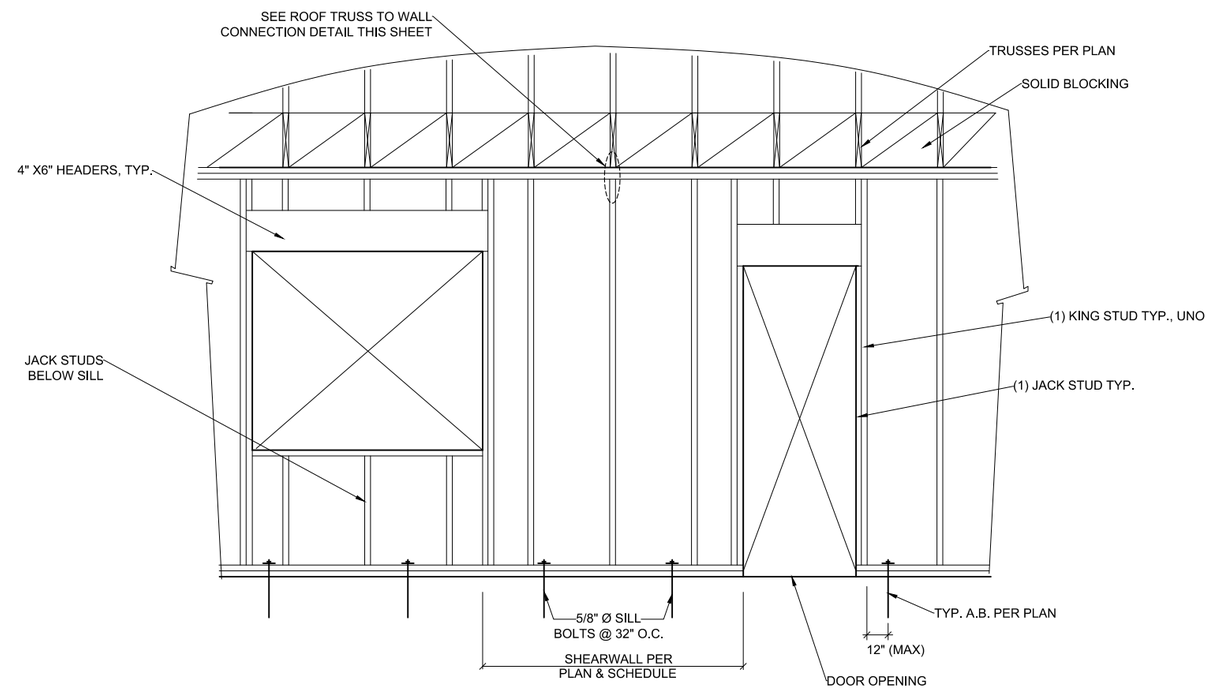

3 C206 **TYPICAL STUD FRAMING**

SCALE: NTS

FRAMING NAILING SCHEDULE

CONNECTION	NAILING	CONNECTION	NAILING
TOP PLATE TO STUD, END NAIL	2x4 (2)- 16d 2x6 (3)- 16d 1 3/4"x5 1/2" LVL (3)-16d 1 3/4"x7 1/4" LVL (4)-16d 1 3/4"x9 1/4" LVL (5)-16d 1 3/4"x11 1/4" LVL (6)-16d	TOP PLATE LAPS (4'-0" MINIMUM)	16d AT 6" O.C.
STUD TO SILL PLATE, END NAIL	2x4 (2)- 16d 2x6 (3)- 16d 1 3/4"x5 1/2" LVL (3)-16d 1 3/4"x7 1/4" LVL (4)-16d 1 3/4"x9 1/4" LVL (5)-16d 1 3/4"x11 1/4" LVL (6)-16d	BUILT-UP HEADERS AND BEAMS	16d AT 16" O.C. ALONG TOP AND BOTTOM EDGE
		BUILT-UP COLUMNS BELOW BEAMS, FACE NAIL	16d AT 16" O.C. - EACH FACE
		BUILT-UP CORNER STUDS (3 STUDS MINIMUM)	16d AT 24" O.C.
DOUBLE SILL PLATES, FACE NAIL (STAGGER)	10d AT 12" O.C.	BACKING AND BLOCKING AT TRUSSES AND 2x FRAMING, END NAIL OR TOE NAIL	(2)- 16d EACH END
DOUBLE STUDS, FACE NAIL (STAGGER)	10d AT 12" O.C. - EACH FACE	BACKING AND BLOCKING AT I-JOIST FRAMING	SIMPSON Z2 OR EQUAL AT EACH END [W/(4)-10dx1 1/2" NAILS]
DOUBLE TOP PLATES, FACE NAIL	16d AT 24" O.C.		
TOP PLATES AT WALL INTERSECTIONS, FACE NAIL	(2)- 16d		

P:\2020\20098JN-Bicknell_Delta\CC2001cns\20098JN.dwg PLOT: December 03, 2020 at 3:59pm Micki Minsch

DESIGN MSM
DRAWN MSM
CHECK JMP
APPROVED JMP
FILE:

No.	DATE	REVISION	BY	APRVD.

DELTA DRIVE SUBDIVISION

BICKNELL INC. QUALITY CONSTRUCTION

STATE OF ALASKA 49TH Joseph M. Pusich CE 8152 REGISTERED PROFESSIONAL ENGINEER 12/03/20

PDC ENGINEERS
PLAN • DESIGN • CONSTRUCT
A RESPEC COMPANY
Independent Civil, Structural, Mechanical, Electrical & Solar
907.780.6060 | AECC605

WATER METER ENCLOSURE DETAILS

DATE: Dec 03, 2020
PDC No. 20098JN

SHEET C206

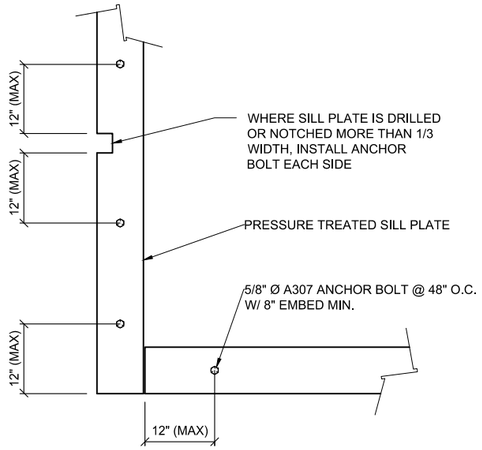

PLAN VIEW

1 C207 SILL PLATE BOLTING TO CONCRETE
SCALE: NTS

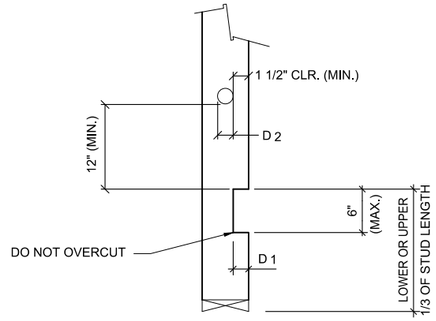

BEARING WALLS		
STUD SIZE	MAX. D 1 (NOTCH)	MAX. D 2 (HOLE)
2x6	1 1/4"	1 1/2"

2 C207 ALLOWABLE HOLES AND NOTCHES IN STUDS
SCALE: NTS

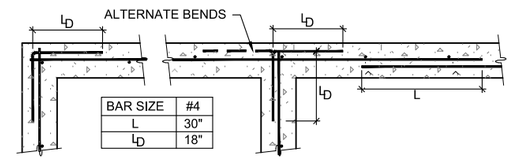

BAR SIZE	#4
L	30"
LD	18"

SINGLE CURTAIN @ STEM WALLS

3 C207 WALL & FOOTING REINFORCING AT CORNERS & INTERSECTIONS
SCALE: NTS

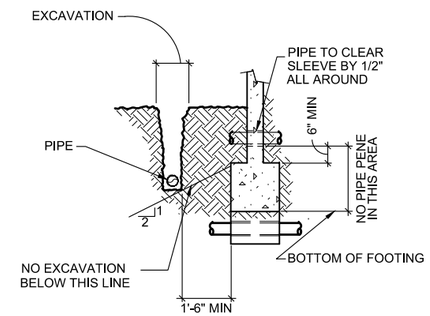

FOOTING SECTION

4 C207 PIPES & TRENCHES AT FOUNDATIONS
SCALE: NTS

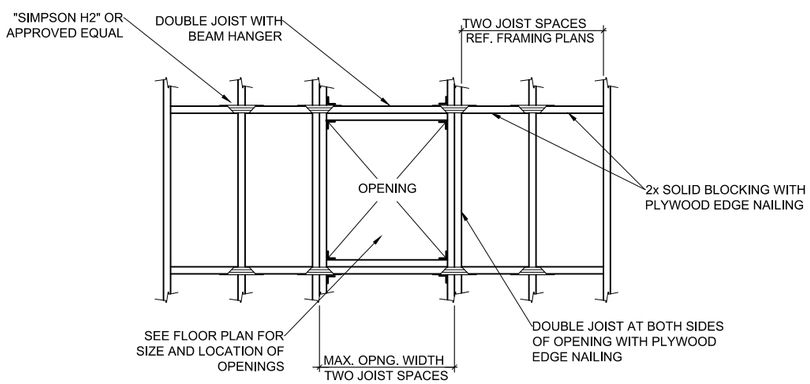

5 C207 TYP. OPENINGS IN FLOORS AND ROOF
SCALE: NTS

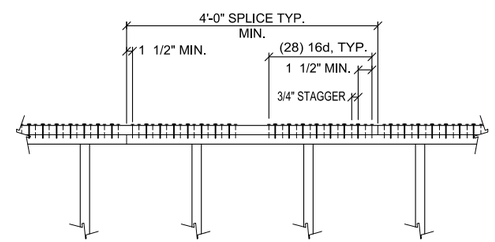

NAILED SPLICE

NOTES:

1. MINIMUM PLATE SPLICE IS (28) 16d EA. SIDE OF EA. PLATE JOINT. MSTC78 IS ALTERNATE.
2. STAGGER NAILS IN 2 ROWS.
3. OCCURS AT TOP PLATES UNDER ROOF.

6 C207 TYPICAL PLATE SPICE
SCALE: NTS

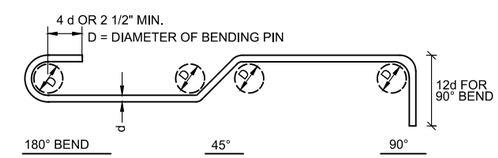

BAR SIZE	MIN. PIN DIA.
#3 THRU #8	6 BAR DIA.

LEGEND (FOR REINF. BENDS NOT SHOWN TO SCALE)

- DENOTES 90° BEND IN THE PLANE OF THE DWG.
- DENOTES 90° BEND PERPENDICULAR TO THE PLANE OF THE DWG.
- DENOTES BEND PERPENDICULAR TO THE PLANE OF THE DWG.
- DENOTES BEND IN THE PLANE OF THE DWG.
- DENOTES OFFSET IN THE PLANE OF THE DWG.

7 C207 STANDARD HOOKS AND BENDS
SCALE: NTS

P:\2020\20098JN-Bicknell_Delta\CIC2001\cnst20098JN.dwg PLOT: December 03, 2020 at: 3:59pm Micki.Minsch

DESIGN	MSM
DRAWN	MSM
CHECK	JMP
APPROVED	JMP
FILE:	

No.	DATE	REVISION	BY	APRVD.

DELTA DRIVE SUBDIVISION
LINEAU, LLC

BICKNELL INC. QUALITY CONSTRUCTION

STATE OF ALASKA 49TH Joseph M. Pusich CE 8152 REGISTERED PROFESSIONAL ENGINEER 12/03/20

PDC ENGINEERS
PLAN • DESIGN • CONSTRUCT
A BESPEC COMPANY
907.780.6060 | AECC605

WATER METER ENCLOSURE DETAILS

DATE: Dec 03, 2020
PDC No. 20098JN

SHEET
C207

ESCP LEGEND

STRAW WATTLE

SILT SACK BMP

TEMPORARY ROCK ACCESS

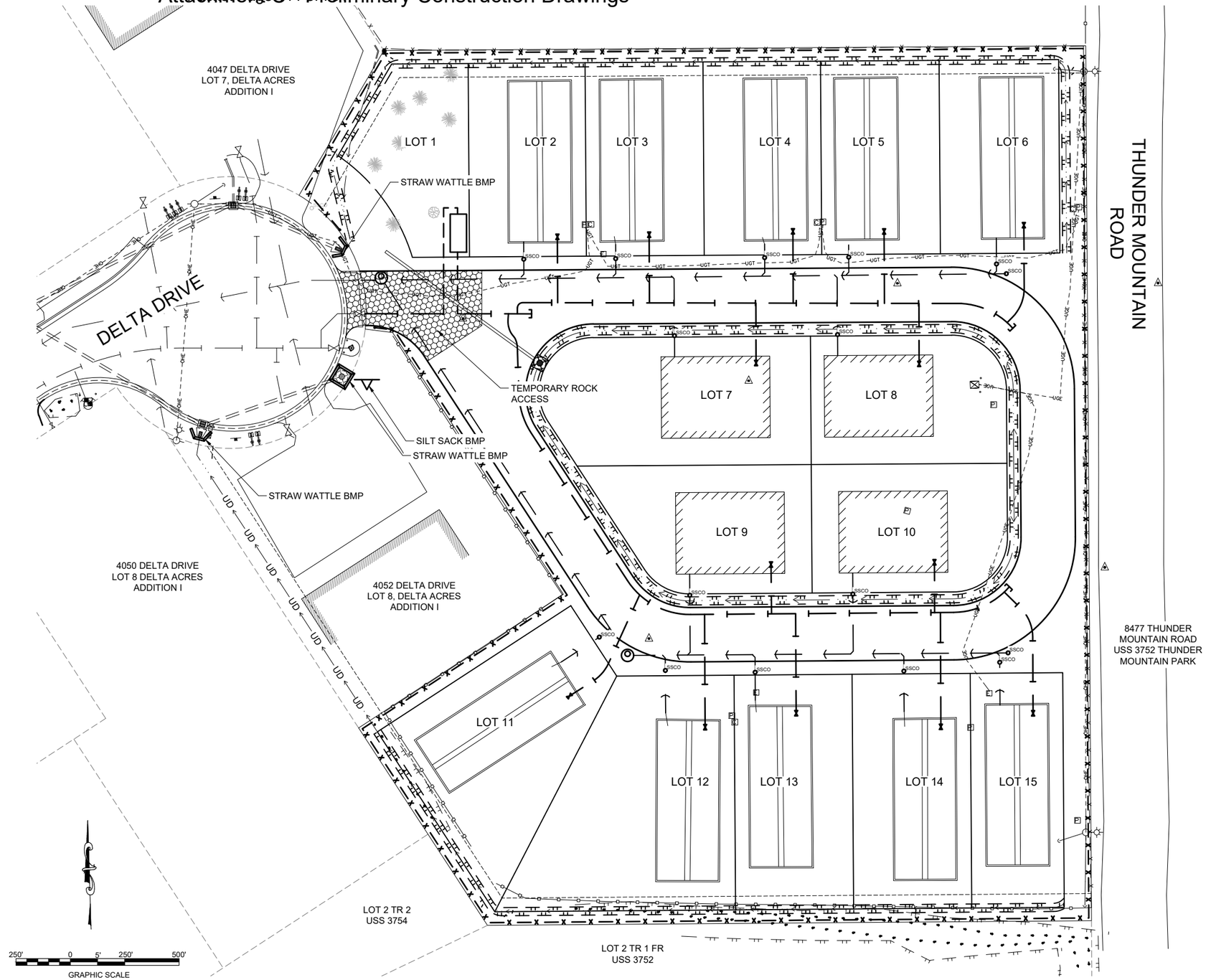

DESIGN	MSM
DRAWN	MSM
CHECK	JMP
APPROVED	JMP
FILE:	

No.	DATE	REVISION	BY	APRVD.

DELTA DRIVE
SUBDIVISION

BICKNELL INC. QUALITY CONSTRUCTION

STATE OF ALASKA 749TH Joseph M. Pusich CE 8152 REGISTERED PROFESSIONAL ENGINEER 12/03/20

PDC ENGINEERS
PLAN • DESIGN • CONSTRUCT
A BESPEC COMPANY
1000 Fairbanks Street, Suite 101, Juneau, AK 99801
907.780.6060 | AECC605

EROSION & SEDIMENT
CONTROL PLAN

DATE: Dec 03, 2020
PDC No. 20098JN

SHEET
C300

P:\2020\20098JN-Bicknell_Delta\CIC600\cms\20098JN.dwg PLOT: December 03, 2020 at: 4:00pm Micki Minsch

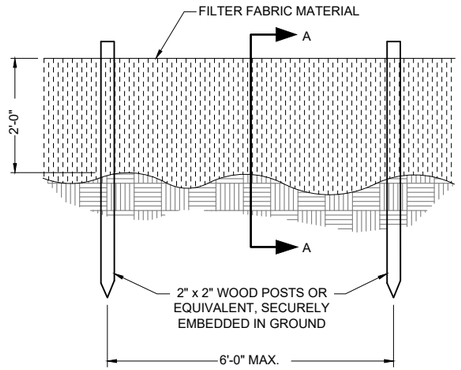

ELEVATION VIEW

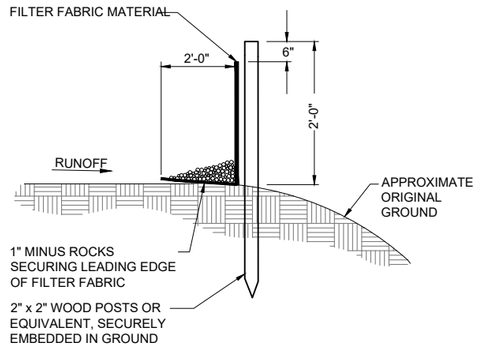

SECTION "A-A"

1 / C301 SILT FENCE DETAIL

SCALE: NTS

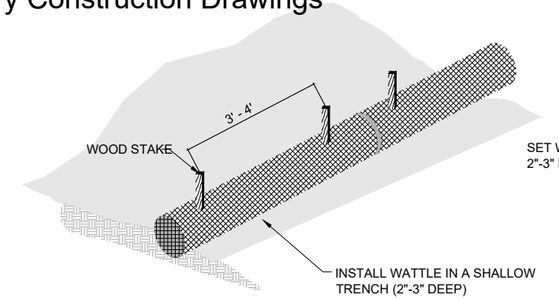

TYPICAL WATTLE ELEVATION VIEW

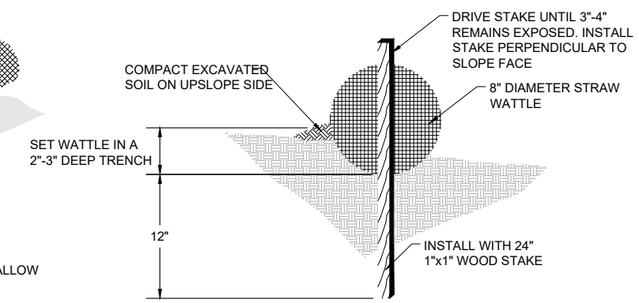

WATTLE ENTRENCHMENT

WATTLE NOTES:

1. BEGIN AT THE LOCATION WHERE THE WATTLE IS TO BE INSTALLED BY EXCAVATING A 2"-3" DEEP x 9" WIDE TRENCH ALONG THE CONTOUR OF THE SLOPE. EXCAVATED SOIL SHOULD BE PLACED UP-SLOPE FROM THE ANCHOR TRENCH.
2. PLACE THE WATTLE IN THE TRENCH SO THAT IT CONTOURS TO THE SOIL SURFACE. COMPACT SOIL FROM THE EXCAVATED TRENCH AGAINST THE WATTLE ON THE UPHILL SIDE. ADJACENT WATTLES SHOULD TIGHTLY ABUT EACH OTHER.
3. SECURE THE WATTLE WITH 24" STAKES EVERY 3-4' AND WITH A STAKE ON EACH END. STAKES SHOULD BE DRIVEN THROUGH THE MIDDLE OF THE WATTLE LEAVING AT LEAST 3-4" OF STAKE EXTENDING ABOVE THE WATTLE. STAKES SHOULD BE DRIVEN PERPENDICULAR TO SLOPE FACE.

2 / C301 STRAW WATTLE IN GROUND DETAIL

SCALE: NTS

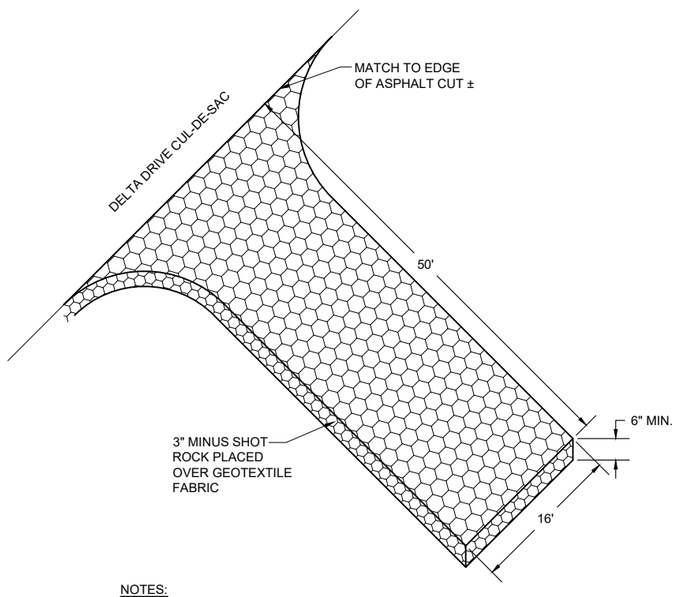

NOTES:

1. MAINTENANCE OF TEMPORARY ROCK ACCESS SHALL INCLUDE REPLACING ROCK AS REQUIRED TO MAINTAIN AN EFFECTIVE AREA FOR SHEDDING EARTHEN MATERIAL FROM CONSTRUCTION EQUIPMENT AND PREVENTING MATERIAL FROM GETTING TRACKED ON TO DELTA DRIVE.
2. CLEAN AND REMOVE ALL TRACKED MATERIAL (MUD, SILT, DEBRIS, ETC.) OFF OF THE PROJECT SITE DAILY AND DISPOSE OF MATERIAL AT AN APPROVED DISPOSAL LOCATION.
3. TEMPORARY ROCK ACCESS APPROACHES SHALL BE INSTALLED AS SHOWN ON THE EROSION AND SEDIMENT CONTROL PLAN OR AS DIRECTED BY THE ENGINEER.

3 / C301 TEMPORARY ROCK ACCESS

SCALE: NTS

EROSION AND SEDIMENT CONTROL NOTES:

1. EROSION AND SEDIMENT CONTROL PLANS (E.S.C.P.) SHOWN ARE INTENDED AS A MINIMUM LEVEL OF EROSION CONTROL ONLY. THE E.S.C.P. IS TO BE USED BY THE CONTRACTOR TO DEVELOP A SITE SPECIFIC STORM WATER POLLUTION PREVENTION PLAN (SWPPP). ALL SEDIMENTATION FROM ON SITE DRAINAGE AND GRADING SHALL BE CONTAINED ON SITE. THE CONTRACTOR IS SOLELY RESPONSIBLE FOR DAMAGE TO ADJACENT PROPERTIES AND STREAMS FROM CONSTRUCTION RELATED EROSION AND SILTATION DURING THE COURSE OF WORK. ANY DAMAGE RESULTING FROM SUCH EROSION AND SILTATION SHALL BE CORRECTED AT THE EXPENSE OF THE CONTRACTOR.
2. ALL EROSION CONTROL/SEDIMENTATION CONTROL BARRIERS SHALL BE IN PLACE PRIOR TO COMMENCING EXCAVATION OR FILLING OPERATIONS.
3. TEMPORARY EROSION CONTROL SYSTEM WILL NOT BE REMOVED UNTIL GERMINATION OF SEEDING AND NO EROSION/SEDIMENT PROBLEMS EXIST.
4. COLLECTED SEDIMENT WILL BE DISPOSED OF OFF SITE AT AN EXISTING APPROVED DUMPSITE. COLLECTED SEDIMENT MAY NOT BE USED AS EMBANKMENT.
5. DEWATERING OF WORK AREAS BY PUMPING SHALL BE IMPLEMENTED TO REDUCE THE PROJECTS WATER QUALITY IMPACTS. THE PUMP DISCHARGE NEEDS TO BE FILTERED THROUGH SEDIMENT CONTROL DEVICES SUCH AS "DIRTBAG" OR SEDIMENT CONTROL STRUCTURES BEFORE IT CAN ENTER FISH HABITATS AT ANY POINT.
6. CONTRACTOR SHALL KEEP CLEAN AND DISPOSE OF ALL EARTHEN MATERIAL TRACKED ONTO DELTA DRIVE. THIS SHALL INCLUDE SWEEPING WITH POWER BROOM, VACUUMING AND WATERING ON A DAILY BASIS DURING HAULING ACTIVITY OR MORE FREQUENTLY AS DIRECTED BY THE ENGINEER.

P:\2020\20098JN-Bicknell_Delta\C\C600\cns\20098JN.dwg PLOT: December 03, 2020 at: 4:00pm Micki.Minsch

DESIGN MSM
DRAWN MSM
CHECK JMP
APPROVED JMP
FILE:

No.	DATE	REVISION	BY	APRVD.

DELTA DRIVE SUBDIVISION

BICKNELL INC. QUALITY CONSTRUCTION

STATE OF ALASKA 49TH Joseph M. Pusich CE 8152 REGISTERED PROFESSIONAL ENGINEER 12/03/20

PDC ENGINEERS PLAN • DESIGN • CONSTRUCT A DESPEC COMPANY 907.780.6060 | AECC605

EROSION & SEDIMENT CONTROL DETAILS

DATE: Dec 03, 2020
PDC No. 20098JN

SHEET C301

PDC ENGINEERS

PLAN DESIGN CONSTRUCT

TECHNICAL MEMORANDUM

Client #	Bicknell Inc.	**Date**	10/2/2020
PDC #	20098JN	**Prepared by**	Sean Kelly, EIT
Project Name	Delta Drive Subdivision	**Reviewed by**	Mark Pusich, PE
Subject	Delta Drive Subdivision – Water Main Branch Sizing Memo		

Topic	Discussion
Introduction	Bicknell Inc. is the owner of Delta Drive subdivision and is proposing the replacement of a water main servicing the subdivisions lots. The subdivision includes 15 lots, 14 of which will have single family structures installed on the lots. The proposed water main installation will involve connecting a water submain off of the new 8" HDPE water line.
Existing Conditions	The existing subdivision includes 10 modular homes on concrete foundations with buildings previously removed. The inner island of the subdivision has four lots that have been recently cleared. The existing homes were served with ¾" water lines from the 2" main.
Peak Design Flow	The Delta Drive Subdivision is not a new development and is residential, so the flow design is straight forward. Testing data from the CBJ fire hydrant located at the cul-de-sac entrance of the subdivision was provided by the CBJ Water Department. Fixture count and pipe sizes were determined with the 2012 Uniform Plumbing Code, IAPMO/ANSI UPC1-2012.
Assumptions	For the design of the water main servicing the Delta Drive Subdivision several assumptions were made. The following are the assumptions made for this design: • Each home has two bathrooms which include shower with tub, sink and toilet. • Each home has a washing machine. • Each home has one hose bib. • Each home has a kitchen sink.
Fixture Count & Pipe Sizing	From the 2012 Uniform Plumbing Code, the following fixture counts (FC) were obtained from table 610.3 (attached) for private units:

Topic	Discussion
	• Lavatory (x2) – 2.0 FC • Water Closet, 1.6 GPF Gravity Tank (x2) – 5.0 FC • Bathtub or Combination Bath/Shower (x2) – 8.0 FC • Clothes Washer – 4.0 FC • Kitchen, domestic with or without dishwasher – 1.5 FC • Hose Bibb – 2.5 These fixtures bring the total fixture count per residential unit to 23 FC. The available static pressure is 64 psi, provided by CBJ, at Delta Drive fire hydrant. The longest line necessary from the tee off of the 8" line is 250'. Due to the configuration of the water main having two branches off of the 8" water main, the total fixture count is determined with seven units instead of the total 14. Total fixture count (TFC) for seven units is as follows, $$TFC = \left(\frac{23\ FC}{UNIT}\right) * 7\ UNITS = 161\ FC$$
Design Recommendation	Using Table 610.4 from the 2012 Uniform Plumbing Code (attached), the minimum pipe size for the water branches is two-inch pipe. It is recommended that two-inch pipe be used for the water main servicing the Delta Drive Subdivision.

TABLE 610.3
WATER SUPPLY FIXTURE UNITS (WSFU) AND MINIMUM FIXTURE BRANCH PIPE SIZES[3]

APPLIANCES, APPURTENANCES OR FIXTURES[2]	MINIMUM FIXTURE BRANCH PIPE SIZE[1,4] (Inches)	PRIVATE	PUBLIC	ASSEMBLY[6]
Bathtub or Combination Bath/Shower (fill)	½	4.0	4.0	—
¾ inch Bathtub Fill Valve	¾	10.0	10.0	—
Bidet	½	1.0	—	—
Clothes Washer	½	4.0	4.0	—
Dental Unit, cuspidor	½	—	1.0	—
Dishwasher, domestic	½	1.5	1.5	—
Drinking Fountain or Water Cooler	½	0.5	0.5	0.75
Hose Bibb	½	2.5	2.5	—
Hose Bibb, each additional[8]	½	1.0	1.0	—
Lavatory	½	1.0	1.0	1.0
Lawn Sprinkler, each head[5]	—	1.0	1.0	—
Mobile Home, each (minimum)	—	12.0	—	—
Sinks	—	—	—	—
Bar	½	1.0	2.0	—
Clinic Faucet	½	—	3.0	—
Clinic Flushometer Valve with or without faucet	1	—	8.0	—
Kitchen, domestic with or without dishwasher	½	1.5	1.5	—
Laundry	½	1.5	1.5	—
Service or Mop Basin	½	1.5	3.0	—
Washup, each set of faucets	½	—	2.0	—
Shower, per head	½	2.0	2.0	—
Urinal, 1.0 GPF Flushometer Valve	¾	See Footnote[7]		—
Urinal, greater than 1.0 GPF Flushometer Valve	¾	See Footnote[7]		—
Urinal, flush tank	½	2.0	2.0	3.0
Wash Fountain, circular spray	¾	—	4.0	—
Water Closet, 1.6 GPF Gravity Tank	½	2.5	2.5	3.5
Water Closet, 1.6 GPF Flushometer Tank	½	2.5	2.5	3.5
Water Closet, 1.6 GPF Flushometer Valve	1	See Footnote[7]		—
Water Closet, greater than 1.6 GPF Gravity Tank	½	3.0	5.5	7.0
Water Closet, greater than 1.6 GPF Flushometer Valve	1	See Footnote[7]		—

For SI units: 1 inch = 25 mm

Notes:

1 Size of the cold branch pipe, or both the hot and cold branch pipes.

2 Appliances, appurtenances, or fixtures not referenced in this table shall be permitted to be sized by reference to fixtures having a similar flow rate and frequency of use.

3 The listed fixture unit values represent their load on the cold water building supply. The separate cold water and hot water fixture unit value for fixtures having both hot and cold water connections shall be permitted to be each taken as three-quarter of the listed total value of the fixture.

4 The listed minimum supply branch pipe sizes for individual fixtures are the nominal (I.D.) pipe size.

5 For fixtures or supply connections likely to impose continuous flow demands, determine the required flow in gallons per minute (gpm) (L/s), and add it separately to the demand in gpm (L/s) for the distribution system or portions thereof.

6 Assembly [Public Use (See Table 422.1)].

7 Where sizing flushometer systems, see Section 610.10.

8 Reduced fixture unit loading for additional hose bibbs is to be used where sizing total building demand and for pipe sizing where more than one hose bibb is supplied by a segment of water distribution pipe. The fixture branch to each hose bibb shall be sized on the basis of 2.5 fixture units.

TABLE 610.4
FIXTURE UNIT TABLE FOR DETERMINING WATER PIPE AND METER SIZES

METER AND STREET SERVICE (Inches)	BUILDING SUPPLY AND BRANCHES (Inches)	MAXIMUM ALLOWABLE LENGTH (feet)														
		40	60	80	100	150	200	250	300	400	500	600	700	800	900	1000
PRESSURE RANGE – 30 to 45 psi[1]																
¾	½[2]	6	5	4	3	2	1	1	1	0	0	0	0	0	0	0
¾	¾	16	16	14	12	9	6	5	5	4	4	3	2	2	2	1
¾	1	29	25	23	21	17	15	13	12	10	8	6	6	6	6	6
1	1	36	31	27	25	20	17	15	13	12	10	8	6	6	6	6
¾	1¼	36	33	31	28	24	23	21	19	17	16	13	12	12	11	11
1	1¼	54	47	42	38	32	28	25	23	19	17	14	12	12	11	11
1½	1¼	78	68	57	48	38	32	28	25	21	18	15	12	12	11	11
1	1½	85	84	79	65	56	48	43	38	32	28	26	22	21	20	20
1½	1½	150	124	105	91	70	57	49	45	36	31	26	23	21	20	20
2	1½	151	129	129	110	80	64	53	46	38	32	27	23	21	20	20
1	2	85	85	85	85	85	85	82	80	66	61	57	52	49	46	43
1½	2	220	205	190	176	155	138	127	120	104	85	70	61	57	54	51
2	2	370	327	292	265	217	185	164	147	124	96	70	61	57	54	51
2	2½	445	418	390	370	330	300	280	265	240	220	198	175	158	143	133
PRESSURE RANGE – 46 to 60 psi[1]																
¾	½[2]	7	7	6	5	4	3	2	2	1	1	1	0	0	0	0
¾	¾	20	20	19	17	14	11	9	8	6	5	4	4	3	3	3
¾	1	39	39	36	33	28	23	21	19	17	14	12	10	9	8	8
1	1	39	39	39	36	30	25	23	20	18	15	12	10	9	8	8
¾	1¼	39	39	39	39	39	39	34	32	27	25	22	19	19	17	16
1	1¼	78	78	76	67	52	44	39	36	30	27	24	20	19	17	16
1½	1¼	78	78	78	78	66	52	44	39	33	29	24	20	19	17	16
1	1½	85	85	85	85	85	85	80	67	55	49	41	37	34	32	30
1½	1½	151	151	151	151	128	105	90	78	62	52	42	38	35	32	30
2	1½	151	151	151	151	150	117	98	84	67	55	42	38	35	32	30
1	2	85	85	85	85	85	85	85	85	85	85	85	85	85	83	80
1½	2	370	370	340	318	272	240	220	198	170	150	135	123	110	102	94
2	2	370	370	370	370	368	318	280	250	205	165	142	123	110	102	94
2	2½	654	640	610	580	535	500	470	440	400	365	335	315	285	267	250
PRESSURE RANGE – Over 60 psi[1]																
¾	½[2]	7	7	7	6	5	4	3	3	2	1	1	1	1	1	0
¾	¾	20	20	20	20	17	13	11	10	8	7	6	6	5	4	4
¾	1	39	39	39	39	35	30	27	24	21	17	14	13	12	12	11
1	1	39	39	39	39	38	32	29	26	22	18	14	13	12	12	11
¾	1¼	39	39	39	39	39	39	39	39	34	28	26	25	23	22	21
1	1¼	78	78	78	78	74	62	53	47	39	31	26	25	23	22	21
1½	1¼	78	78	78	78	78	74	65	54	43	34	26	25	23	22	21
1	1½	85	85	85	85	85	85	85	85	81	64	51	48	46	43	40
1½	1½	151	151	151	151	151	151	130	113	88	73	51	51	46	43	40
2	1½	151	151	151	151	151	151	142	122	98	82	64	51	46	43	40
1	2	85	85	85	85	85	85	85	85	85	85	85	85	85	85	85
1½	2	370	370	370	370	360	335	305	282	244	212	187	172	153	141	129
2	2	370	370	370	370	370	370	370	340	288	245	204	172	153	141	129
2	2½	654	654	654	654	654	650	610	570	510	460	430	404	380	356	329

For SI units: 1 inch = 25 mm, 1 foot = 304.8 mm, 1 pound-force per square inch = 6.8947 kPa

Notes:

[1] Available static pressure after head loss.

[2] Building supply, not less than ¾ of an inch (20 mm) nominal size.

From: Loni VanKirk <Loni.VanKirk@juneau.org>
Sent: Monday, September 28, 2020 8:18 AM
To: Kevin Puustinen <KevinPuustinen@pdceng.com>
Subject: RE: Hydrant Test Data - Delta Drive

CAUTION: This email originated from outside of the organization. Exercise caution when viewing attachments, clicking links, or responding to requests.

ACROSS FROM 4045 DELTA DR.	MUELLER	WET	64	1110/48	8/13/2019

Kevin,

Here is the Data you requested.

Static PSI Flow/residual PSI

Loni Van Kirk
Distribution Senior Operator
CBJ Water Utility
907-723-4975

From: Kevin Puustinen <KevinPuustinen@pdceng.com>
Sent: Wednesday, September 23, 2020 10:06 AM
To: Loni VanKirk <Loni.VanKirk@juneau.org>
Subject: Hydrant Test Data - Delta Drive

EXTERNAL E-MAIL: BE CAUTIOUS WHEN OPENING FILES OR FOLLOWING LINKS

Hi Loni – Can you please send me your most recent test data for the hydrant in the cul-de-sac on Delta Drive?

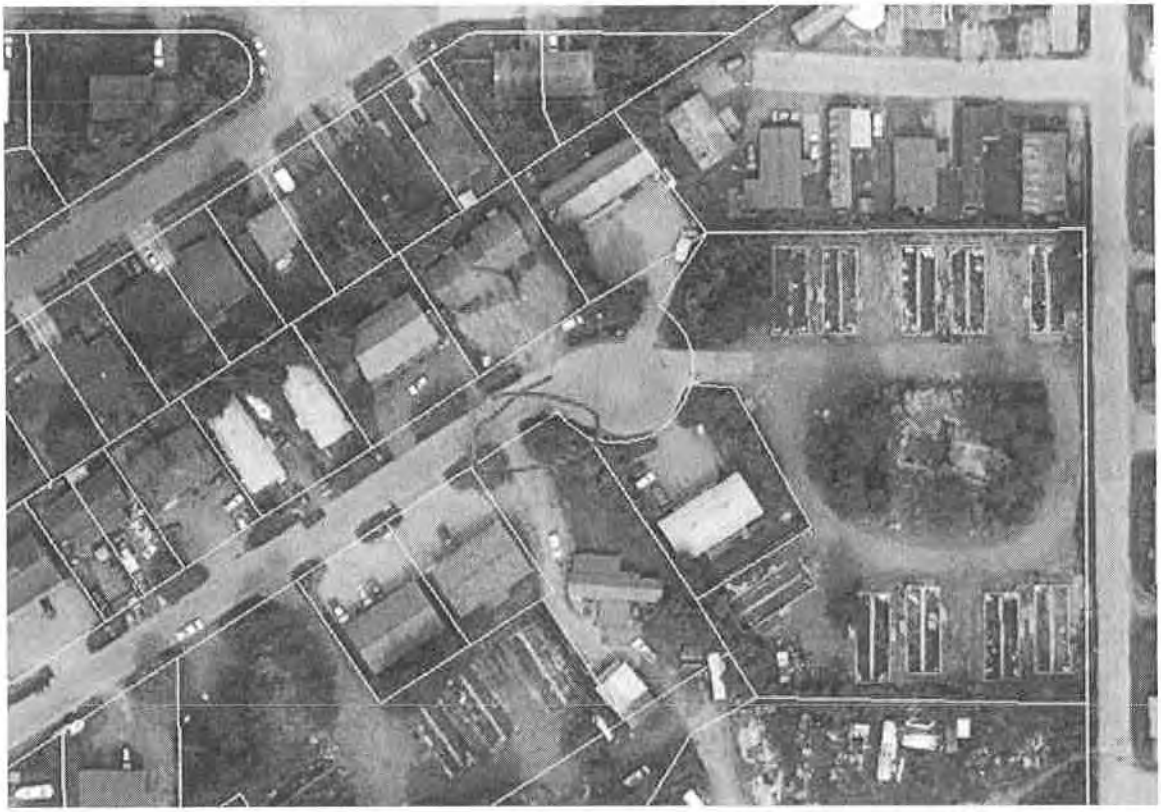

Thanks,

Kevin Puustinen, PE
Civil Engineer

PDC ENGINEERS
A RESPEC COMPANY

9109 Mendenhall Mall Rd. Ste 4, Juneau, Alaska 99801 | 907.780.6060
Facebook | LinkedIn | Twitter | www.pdceng.com

Transforming Challenges into Solutions

Anchorage | Fairbanks | Juneau | Palmer | Soldotna

Confidentiality Notice: This E-mail and any attachments is covered by the Electronic Communications Privacy Act, 18 U.S.C. & 2510-2524, is confidential and may be legally privileged. If you are not the intended recipient, you are hereby notified that any retention, dissemination, or copying of this communication is strictly prohibited. Please reply to the sender that you have received the message in error, and permanently delete the original and destroy any copy, including printed copies of this email and any attachments thereto.

DRAINAGE REPORT
FOR
DELTA DRIVE SUBDIVISION
JUNEAU, ALASKA

Prepared For:

Bicknell Development
2275 Brandy Lane, Suite 1
Juneau, AK 99801

Prepared By:

PDC Engineers
9109 Mendenhall Mall Road Suite 4
Juneau, AK 99801

Date: November 20, 2020
PDC Project No. 20098JN

1.0 PROJECT OVERVIEW

1.1 Project Description

Bicknell Inc., is proposing to redevelop an existing residential property. The project is located off the cul-de-sac at the end of Delta Drive. The property previously had 10 double wide mobile homes and a structure in the center of the property. The mobile homes and the center structure have been removed and the mobile home concrete foundations remain. The property has been divided into 15 lots. Lot 1 is the parent lot, lots 2 through 6 make up the northern lots. The center of the property has been divided into four lots to create lots 7 through 10. Lots 11 through 15 make up the southern lots.

1.2 Project Duration

The developer (Bicknell) will begin construction in the spring of 2021. The subdivision development is anticipated to occur over a period of approximately 3 months.

2.0 SOIL INFORMATION

Soil conditions present in the project area consists of a vegetated surface layer underlain by a soil matrix of sand, gravels and silt material. The ground water is located approximately 3 feet below the surface as confirmed by excavated test pits. The project area is fairly flat.

3.0 STORM WATER SYSTEM

Currently drainage leaves the site through a 12” CMP culvert located at the end of Delta Drive on the northeast side of the cul-de-sac.

The storm water system along Delta Drive has been proposed to be upgraded per CBJ Contract BE21-028 “Delta Drive Reconstruction.” Work is scheduled for spring/summer 2021. For the purpose of this report, the proposed culverts for Delta Drive Reconstruction were used for the analysis of the Delta Drive Subdivision project site.

Drainage from the proposed Delta Drive Subdivision project site will be discharged into the Delta Drive storm water system at three locations, the 12” CPP ditch culvert (Pipe P-1) on the northeast side of the Delta Drive cul-de-sac, the 12” CPP culvert (Pipe P-3) at the area drain on the southeast side of the cul-de-sac, and a 12” CPP ditch culvert (Pipe P-4) located on the southwestern side of the cul-de-sac where it meets the 10’ drainage easement.

A drainage swale along the northern perimeter of the proposed project area will be

graded at 1.0% from the east to the west to then discharge in to Pipe P-1 at the northeast side of the Delta Drive cul-de-sac. Drainage from the swale around lots 7 through 10 will drain into a Type III catch basin where it will then flow through a 12" CPP pipe (Pipe P-2) to a ditch where it will leave the site through Pipe P-1 at the northeast side of the Delta Drive cul-de-sac.

A drainage swale along the southern perimeter of the proposed project area will be graded at 1.0% from east to west to an underdrain that runs along a 10' drainage easement to Pipe P-4 at the southwestern side of the Delta Drive cul-de-sac.

All of the discharge from the site would then meet at a catch basin on Delta Drive where it will be discharge through an 18" CPP culvert (Pipe P-5) to continue through the storm system.

Storm drain structures and piping would follow CBJ Standard Specifications and Standard Drawings for the development.

3.0 SITE RUNOFF CALCULATION METHOD:

A total of four catchment areas were analyzed representing the existing and proposed drainage conveyance systems relevant to the project. The catchment areas include: The existing 12" CPP culvert (Pipe P-1) that is located at the northeastern side of the Delta Drive cul-de-sac, the proposed 12" CPP culvert (Pipe P-2) that is located on the project site near the entrance to the subdivision, the existing 12" CPP culvert (Pipe P-3) that is located on the southeastern edge of the cul-de-sac, and the existing 12" CPP culvert (Pipe P-4) at the southwestern end of the cul-de-sac.

The catchment areas were determined using the proposed design model. A delineation of the areas can be found in Appendix A.

To calculate the site runoff we have elected to use the Rational Method. The Rational Method is most appropriate for evaluating drainage basins less than 10 acres. Appendix D of the "2010 CBJ Manual of Storm Water Best Management Practices" was utilized as a guide. The calculations and supporting documentation can be found in Appendix B, C, D & E of this report.

3.1 Anticipated Site Runoff (Q):

Using the Rational Method, the amount of stormwater runoff during the 25-year storm event per catchment area was determined. See Table 1.1 for results, the calculations can be found in Appendix B.

Table 1.1 Anticipated Site Runoff (Q):	
Catchment Area	**Q (cfs)**
Pipe P-1	1.03
Pipe P-2	0.94
Pipe P-3	0.42
Pipe P-4	0.74

3.2 Conveyance/Discharge Structure Capacities:

The capacity of the existing and proposed drainage systems was calculated using the Manning's Equation to determine if proposed 25-year storm even flows could be conveyed. See Table 1.2 below for results, calculations can be found in Appendix B.

Table 1.2 Conveyance/Discharge Structure Capacities:	
Catchment Area	**Q (cfs)**
Pipe P-1	2.57
Pipe P-2	2.34
Pipe P-3	2.59
Pipe P-4	14.51
Pipe P-5	6.16

Summary

Table 1.3 below compares anticipated 25-year runoff in the proposed and existing conveyance systems to their available hydraulic capacity.

Table 1.3 Comparison			
Drainage Basin	**Anticipated Runoff Q (cfs)**	**Capacity Check**	**Available Capacity Q (cfs)**
Pipe P-1	1.12	<	2.57
Pipe P-2	0.94	<	2.34
Pipe P-3	0.42	<	2.59
Pipe P-4	0.74	<	14.51
Pipe P-5	3.13	<	6.16

In summary our analysis shows that there is enough capacity in the existing and proposed drainage structures to handle flows from the altered drainage patterns as a result of the proposed Delta Drive Subdivision improvements.

11/20/2020

J. Mark Pusich, P.E.
Principal Civil Engineer
PDC Engineers

Appendices:

A – Catchment Areas
B – Rational Method
C – Runoff Coefficient
D – Time of Concentration
E – Rainfall Intensity
F – Existing & Proposed

Appendix A
Catchment Areas

DELTA DRIVE SUBDIVISION
CONSTRUCTION IMPROVEMENT PLAN
DRAINAGE MAP

JUNEAU, ALASKA
PREPARED FOR BICKNELL, INC.

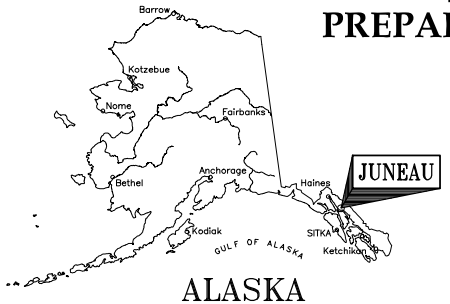

ALASKA

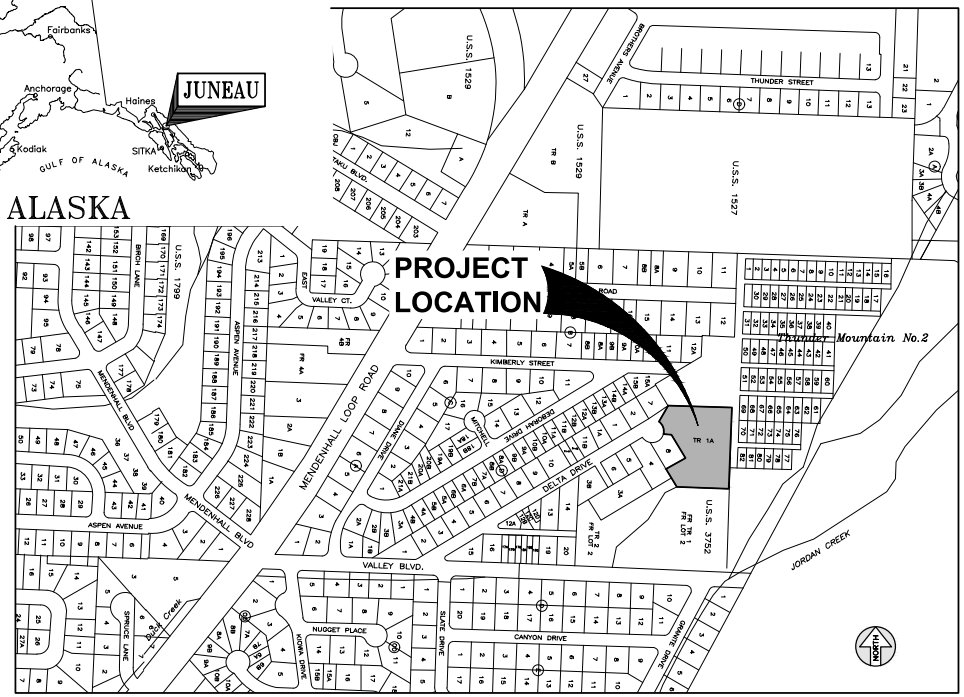

PROJECT LOCATION MAP

500' 0 250' 500' 1000'
GRAPHIC SCALE

SHEET INDEX	
SHEET No.	DESCRIPTION
1	COVER SHEET
2	P-1: EXISTING 12" CPP CULVERT
3	P-2: PROPOSED 12" CPP CULVERT
4	P-3: EXISTING 12" CPP CULVERT
5	P-4: EXISTING 12" CPP CULVERT

P:\2020\2009UNI-Bicknell_Delta\C\Drainage Map.dwg PLOT: November 20, 2020 in: 10.4dwn Misc.Attmnt

DESIGN XXX
DRAWN XXX
CHECK JMP
APPROVED JMP
FILE:

No.	DATE	REVISION	BY	APRVD.

DELTA DRIVE SUBDIVISION
JUNEAU, AK

PDC ENGINEERS
PLAN • DESIGN • CONSTRUCT
A 重要企业集 COMPANY
9109 Mendenhall Mall Rd. Ste. 4, Juneau, AK 99801
907.780.6060 | AECC605

COVER SHEET

DATE: Nov 20, 2020
PDC No. 2009UNI
SHEET 1

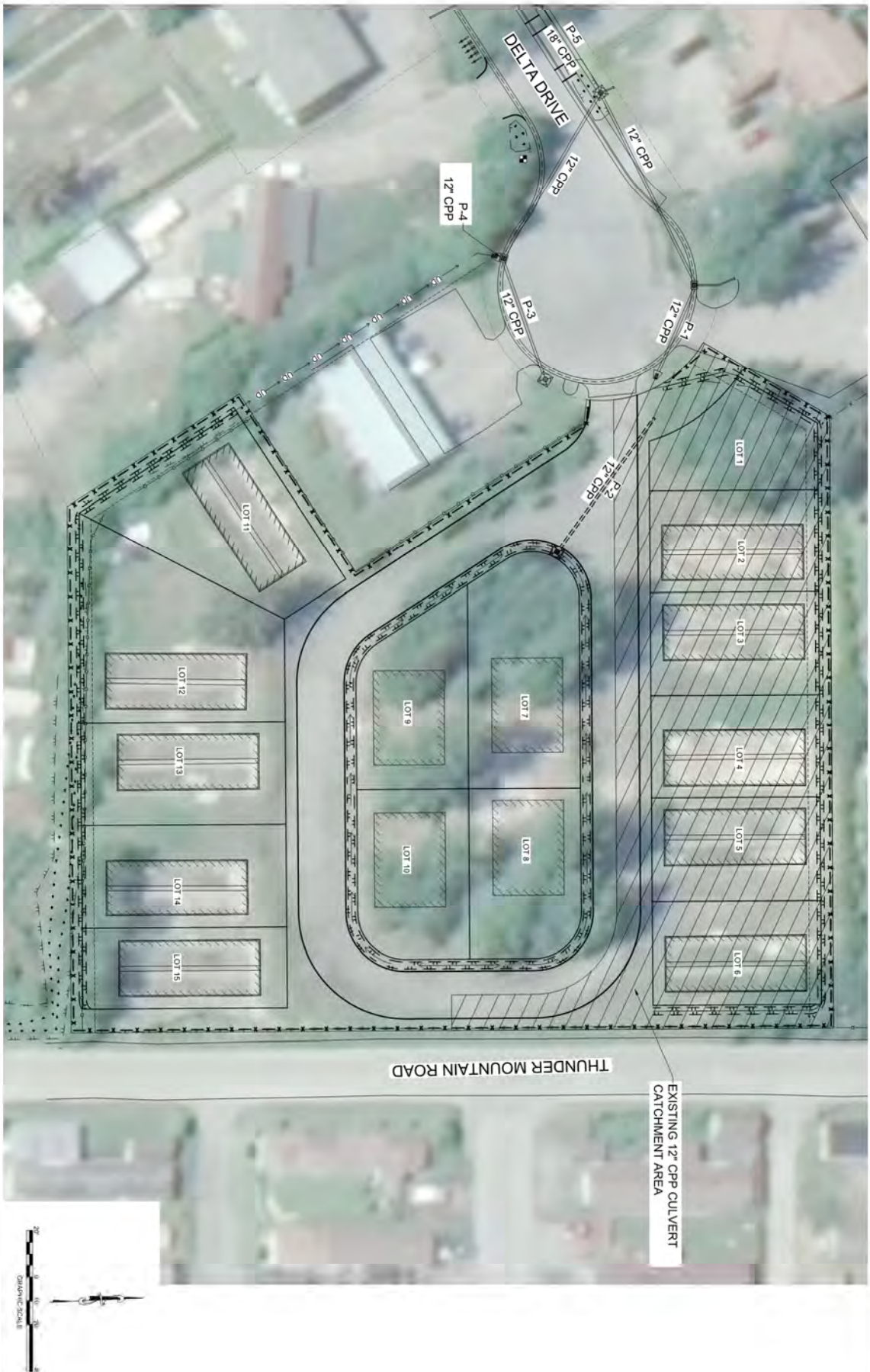

DESIGN XXX
DRAWN XXX
CHECK JMP
APPROVED JMP
FILE

No	DATE	REVISION	BY	APRV'D

DELTA DRIVE
SUBDIVISION
JUNEAU, AK

PDC ENGINEERS
PLAN • DESIGN • CONSTRUCT
I N E E P E E S E R V A N T
9 0 7 8 8 0 . 6 0 6 0 | A E C 6 0 3

P-1: EXISTING 12" CPP
CULVERT CATCHMENT AREA

DATE Nov 20, 2020
PDC No 2020-0004
SHEET 2

DESIGN XXX
DRAWN XXX
CHECK JMP
APPROVED JMP
FILE

No	DATE	REVISION	BY	APRV'D

DELTA DRIVE SUBDIVISION
JUNEAU, AK

PDC ENGINEERS
PLAN • DESIGN • CONSTRUCT
INTEGRITY COMMITMENT
9001 Mendenhall Loop Rd., Juneau, AK 99801
907.780.6060 | AECOM

P-2: PROPOSED 12" CPP CULVERT CATCHMENT AREA

DATE Nov 20, 2020
PDC No 2020-0004
SHEET 3

DESIGN XXX
DRAWN XXX
CHECK JMP
APPROVED JMP
FILE

No	DATE	REVISION	BY	APPRO

DELTA DRIVE
SUBDIVISION
JUNEAU, AK

PDC ENGINEERS
PLAN • DESIGN • CONSTRUCT
9101 Mendenhall Mall Rd, Suite A
Juneau, Alaska 99801
907.780.6060 | AECC603

P-3: EXISTING 12" CPP
CULVERT CATCHMENT AREA

DATE Nov 20, 2020
PDC No 2020-0004
SHEET 4

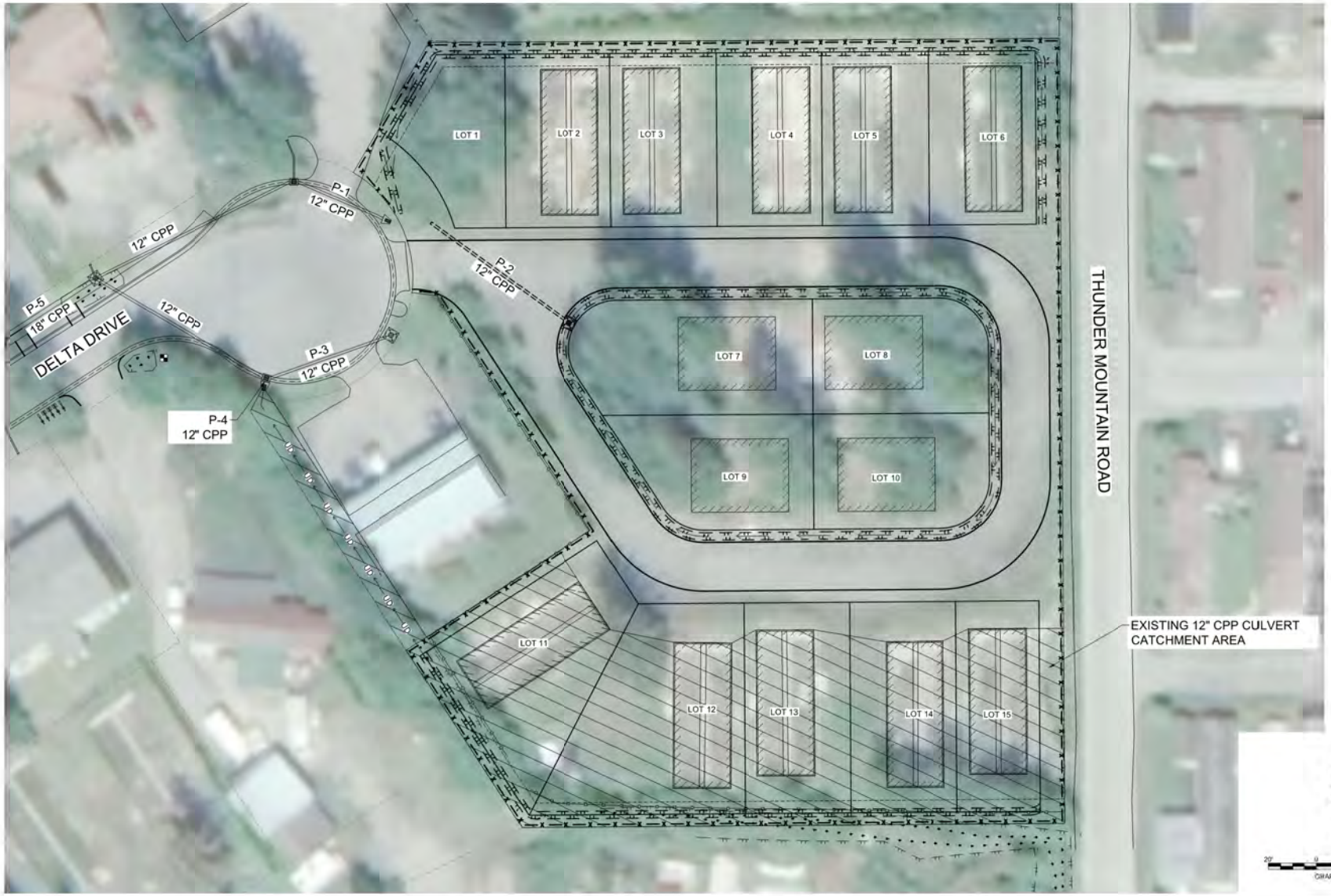

DESIGN XXX
DRAWN XXX
CHECK JMP
APPROVED JMP
FILE

No.	DATE	REVISION	BY	APRVD.

DELTA DRIVE
SUBDIVISION

JUNEAU, AK

PDC ENGINEERS
PLAN • DESIGN • CONSTRUCT
A BESPEC COMPANY
9109 Mendenhall Mall Rd. Ste. 4, Juneau, AK 99801
907.780.6060 | AECC605

P-4: EXISTING 12" CPP
CULVERT CATCHMENT AREA

DATE Nov 20, 2
PDC No 2009
SHEET 5

Appendix B
Rational Method

Rational Method Site Runoff Pipe P-1: Existing 12" CPP		
Project:	Delta Drive Subdivision	PDC ENGINEERS PLAN • DESIGN • CONSTRUCT A RESPEC COMPANY 9109 Mendenhall Mall Rd, Ste. 4, Juneau, AK 99801 907.780.6060 | AECC605
Owner:	Bicknell Inc.	
Date:	11/19/2020	
Prepared By:	M. Minsch	
Checked By:	M. Pusich	

$$\boldsymbol{Q = CIA}$$

Q= peak flow in cubic feet per second (cfs)
C = runoff coefficient
I = rainfall intensity (inches per hour)
A = catchment area (acres)

$$\boldsymbol{C_c = (C_1A_1 + C_2A_2)/A_t}$$

$C_c = composite\ runoff\ coefficient$
$C_{1,2} = runoff\ coefficient\ for\ each\ area\ land\ cover\ type$
$A_t = total\ area\ (acres)$
$A_{1,2} = areas\ of\ land\ cover\ (acres)$
$C_c = 0.84, see\ Appendix\ C\ for\ calculation$

$$\boldsymbol{T_c = T_1 + T_2 + \cdots + T_n}$$

$T_c = time\ of\ concentration\ (min)$
$T_{1,2} = travel\ time\ across\ separate\ flow\ path\ segments$ (min)
$T_c = 13.10\ min, see\ Appendix\ D\ for\ calculaton$

$$\boldsymbol{T_t = L/60V}$$

$T_t = travel\ time\ (min)$
$L = the\ distance\ of\ flow\ across\ a\ given\ segment\ (feet)$
$V = k_r\sqrt{S_0} = average\ velocity\ \left(\frac{feet}{\sec}\right) across\ land\ cover$
$k_r = time\ of\ concentration\ velocity\ factor\ (CBJ\ Manual\ of\ Storm\ Water\ BMP\ 2010, Table\ D-5, PG.D-10)$
$S_0 = slope\ of\ flow\ path\ (\frac{feet}{feet})$

Per CBJ Manual of Storm Water BMP 2010, Table 5-1, page 5-1, design event frequencies are specified. For driveway culvert, a 25-year storm event is the required design return period. We will base our analysis on a 25-year design return period for all drainage structures and catchment areas. Per CBJ Manual of Storm Water BMP 2010, page D-9, basins with a time and concentration 10 minutes or less shall use the 10 minute intensity. Basins with a time of concentration greater than 10 minutes and less than 30 minutes shall interpolate between the 10 and 30 minute values. Rainfall intensity for the site was sourced from the NOAA Atlas 14, Point Precipitation Frequency Estimates, see Appendix E, and is summarized as follows:

	Design Return Period
Tc 13.10 (min)	25-year
Interpolated Intensity (in/hr)=	**2.03**

Pipe P-1 is an existing 12" CPP culvert on the northeast side of the Delta Drive cul-de-sac that drains into the Delta Drive storm system at the location where the new subdivision access will tie into the shoulder of the cul-de-sac. The area that is proposed to contribute runoff to this culvert was delineated in AutoCAD.

A=26270 sqft/43,560 = 0.60 acres

	C_c	I	A		
Q (cfs)=	0.84	2.03	0.60	=	**1.03**

Rational Method Site Runoff Pipe P-2: Proposed 12" CPP		
Project:	Delta Drive Subdivision	PDC ENGINEERS PLAN • DESIGN • CONSTRUCT A RESPEC COMPANY 9109 Mendenhall Mall Rd. Ste. 4, Juneau, AK 99801 907.780.6060 | AECC605
Owner:	Bicknell Inc.	
Date:	11/19/2020	
Prepared By:	M. Minsch	
Checked By:	M. Pusich	

$$\boldsymbol{Q = CIA}$$

Q= peak flow in cubic feet per second (cfs)
C = runoff coefficient
I = rainfall intensity (inches per hour)
A = catchment area (acres)

$$\boldsymbol{C_c = (C_1A_1 + C_2A_2)/A_t}$$

$C_c = composite\ runoff\ coefficient$
$C_{1,2} = runoff\ coefficient\ for\ each\ area\ land\ cover\ type$
$A_t = total\ area\ (acres)$
$A_{1,2} = areas\ of\ land\ cover\ (acres)$
$C_c = 0.84, \quad see\ Appendix\ C\ for\ calculation$

$$\boldsymbol{T_c = T_1 + T_2 + \cdots + T_n}$$

$T_c = time\ of\ concentration\ (min)$
$T_{1,2} = travel\ time\ across\ separate\ flow\ path\ segments$ (min)
$T_c = 11.27\ min, see\ Appendix\ D\ for\ calculaton$

$$\boldsymbol{T_t = L/60V}$$

$T_t = travel\ time\ (min)$
$L = the\ distance\ of\ flow\ across\ a\ given\ segment\ (feet)$
$V = k_r\sqrt{S_0} = average\ velocity\ \left(\frac{feet}{\sec}\right) across\ land\ cover$
$k_r = time\ of\ concentration\ velocity\ factor\ (CBJ\ Manual\ of\ Storm\ Water\ BMP\ 2010, Table\ D-5, PG.D-10)$
$S_0 = slope\ of\ flow\ path\ (\frac{feet}{feet})$

Per CBJ Manual of Storm Water BMP 2010, Table 5-1, page 5-1, design event frequencies are specified. For driveway culvert, a 25-year storm event is the required design return period. We will base our analysis on a 25-year design return period for all drainage structures and catchment areas. Per CBJ Manual of Storm Water BMP 2010, page D-9, basins with a time and concentration 10 minutes or less shall use the 10 minute intensity. Basins with a time of concentration greater than 10 minutes and less than 30 minutes shall interpolate between the 10 and 30 minute values. Rainfall intensity for the site was sourced from the NOAA Atlas 14, Point Precipitation Frequency Estimates, see Appendix E, and is summarized as follows:

	Design Return Period
Tc 11.27 (min)	25-year
Interpolated Intensity (in/hr)=	**2.22**

P-2 is a proposed 12" CPP pipe is being installed to maintain the runoff from part of the subdivision access road and from proposed lots 7 through 10. Runoff will be carried down to a ditch where it will then flow into pipe P-1 and discharge into the Delta Drive storm system. The area that is proposed to contribute runoff to this culvert was delineated in AutoCAD.

A=21,736 sqft/43,560 = 0.50 acres

	C_c	I	A		
Q (cfs)=	0.84	2.22	0.50	=	**0.94**

Rational Method Site Runoff Pipe P-3: Existing 12" CPP		
Project:	Delta Drive Subdivision	PDC ENGINEERS PLAN • DESIGN • CONSTRUCT A RESPEC COMPANY 9109 Mendenhall Mall Rd. Ste. 4, Juneau, AK 99801 907.780.6060 | AECC605
Owner:	Bicknell Inc.	
Date:	11/19/2020	
Prepared By:	M. Minsch	
Checked By:	M. Pusich	

$$\boldsymbol{Q = CIA}$$

Q= peak flow in cubic feet per second (cfs)
C = runoff coefficient
I = rainfall intensity (inches per hour)
A = catchment area (acres)

$$\boldsymbol{C_c = (C_1A_1 + C_2A_2)/A_t}$$

$C_c = composite\ runoff\ coefficient$
$C_{1,2} = runoff\ coefficient\ for\ each\ area\ land\ cover\ type$
$A_t = total\ area\ (acres)$
$A_{1,2} = areas\ of\ land\ cover\ (acres)$
$C_c = 0.85, see\ Appendix\ C\ for\ calculation$

$$\boldsymbol{T_c = T_1 + T_2 + \cdots + T_n}$$

$T_c = time\ of\ concentration\ (min)$
$T_{1,2} = travel\ time\ across\ separate\ flow\ path\ segments$ (min)
$T_c = 12.93\ min, see\ Appendix\ D\ for\ calculaton$

$$\boldsymbol{T_t = L/60V}$$

$T_t = travel\ time\ (min)$
$L = the\ distance\ of\ flow\ across\ a\ given\ segment\ (feet)$
$V = k_r\sqrt{S_0} = average\ velocity\ \left(\frac{feet}{\sec}\right) across\ land\ cover$
$k_r = time\ of\ concentration\ velocity\ factor\ (CBJ\ Manual\ of\ Storm\ Water\ BMP\ 2010, Table\ D-5, PG.D-10)$
$S_0 = slope\ of\ flow\ path\ (\frac{feet}{feet})$

Per CBJ Manual of Storm Water BMP 2010, Table 5-1, page 5-1, design event frequencies are specified. For driveway culvert, a 25-year storm event is the required design return period. We will base our analysis on a 25-year design return period for all drainage structures and catchment areas. Per CBJ Manual of Storm Water BMP 2010, page D-9, basins with a time and concentration 10 minutes or less shall use the 10 minute intensity. Basins with a time of concentration greater than 10 minutes and less than 30 minutes shall interpolate between the 10 and 30 minute values. Rainfall intensity for the site was sourced from the NOAA Atlas 14, Point Precipitation Frequency Estimates, see Appendix E, and is summarized as follows:

	Design Return Period
Tc 12.93 (min)	25-year
Interpolated Intensity (in/hr)=	**2.05**

Pipe P-3 is an existing 12" CPP culvert on the southeast side of the Delta Drive cul-de-sac that drains into the Delta Drive ditch system that is near the location where the new subdivision access will tie into the shoulder of the cul-de-sac. Runoff will flow into the area drain and catch basin before flowing through the culvert. The area that is proposed to contribute runoff to this culvert was delineated in AutoCAD.

A=10,626 sqft/43,560 = 0.24 acres

	C_c	I	A		
Q (cfs)=	0.85	2.05	0.24	=	**0.42**

Rational Method Site Runoff Pipe P-4: Existing 12" CPP		
Project:	Delta Drive Subdivision	PDC ENGINEERS PLAN · DESIGN · CONSTRUCT A RESPEC COMPANY 9109 Mendenhall Mall Rd, Ste. 4, Juneau, AK 99801 907.780.6060 | AECC605
Owner:	Bicknell Inc.	
Date:	11/19/2020	
Prepared By:	M. Minsch	
Checked By:	M. Pusich	

$$\boldsymbol{Q = CIA}$$

Q= peak flow in cubic feet per second (cfs)
C = runoff coefficient
I = rainfall intensity (inches per hour)
A = catchment area (acres)

$$\boldsymbol{C_c = (C_1A_1 + C_2A_2)/A_t}$$

$C_c = composite\ runoff\ coefficient$
$C_{1,2} = runoff\ coefficient\ for\ each\ area\ land\ cover\ type$
$A_t = total\ area\ (acres)$
$A_{1,2} = areas\ of\ land\ cover\ (acres)$
$C_c = 0.83, see\ Appendix\ C\ for\ calculation$

$$\boldsymbol{T_c = T_1 + T_2 + \cdots + T_n}$$

$T_c = time\ of\ concentration\ (min)$
$T_{1,2} = travel\ time\ across\ separate\ flow\ path\ segments$ (min)
$T_c = 16.60\ min, see\ Appendix\ D\ for\ calculaton$

$$\boldsymbol{T_t = L/60V}$$

$T_t = travel\ time\ (min)$
$L = the\ distance\ of\ flow\ across\ a\ given\ segment\ (feet)$
$V = k_r\sqrt{S_0} = average\ velocity\ \left(\frac{feet}{\sec}\right) across\ land\ cover$
$k_r = time\ of\ concentration\ velocity\ factor\ (CBJ\ Manual\ of\ Storm\ Water\ BMP\ 2010, Table\ D-5, PG.D-10)$
$S_0 = slope\ of\ flow\ path\ (\frac{feet}{feet})$

Per CBJ Manual of Storm Water BMP 2010, Table 5-1, page 5-1, design event frequencies are specified. For driveway culvert, a 25-year storm event is the required design return period. We will base our analysis on a 25-year design return period for all drainage structures and catchment areas. Per CBJ Manual of Storm Water BMP 2010, page D-9, basins with a time and concentration 10 minutes or less shall use the 10 minute intensity. Basins with a time of concentration greater than 10 minutes and less than 30 minutes shall interpolate between the 10 and 30 minute values. Rainfall intensity for the site was sourced from the NOAA Atlas 14, Point Precipitation Frequency Estimates, see Appendix E, and is summarized as follows:

	Design Return Period
Tc 16.60 (min)	25-year
Interpolated Intensity (in/hr)=	**1.77**

There is an existing 12" CMP culvert that drains into the existing Delta Drive drainage system at the location where the new subdivision access will tie into the end of the Delta Drive cul-de-sac. The 12" CMP culvert is proposed to be replaced with a 12" CPP culvert along with the rest of the Delta Drive storm system under CBJ Contract BE21-028 "Delta Drive Reconstruction." Work is scheduled for spring/summer 2021. The 12" CPP culvert is being installed to maintain the existing flow around the Delta Drive cul-de-sac.

A=21,786 sqft/43,560 = 0.50 acres

	C_c	I	A		
Q (cfs)=	0.83	1.77	0.50	=	**0.74**

Appendix C
Runoff Coefficient

Runoff Coefficient Calculations	
Project:	Delta Drive Subdivision
Owner:	Bicknell Inc.
Date:	11/19/2020
Prepared By:	M. Minsch
Checked By:	M. Pusich

Pipe P-1: Existing 12" CPP Culvert	
Total Basin Area (SQFT)=	26270
Total Basin Area (ACRE)=	0.60

Surface Type	Location	Area (SQFT)	Total (SQFT)	Total (Acre)	% Overall Basin	Surface Runoff Coefficient	Runoff Coefficient for Each Area
Pavement	Road	3143					
			3143	0.07215335	11.96%	0.9	0.1
Building Roofs	Mobile homes	7084					
			7084	0.16262626	26.97%	0.9	0.1
Gravel Area	Everywhere else	16043					
			16043	0.3682966	61.07%	0.8	0.3
		Total=	26270	0.60	100.00%		0.5
					Composite Runoff Coefficient		**0.84**

Pipe P-2: Proposed 12" CPP	
Total Basin Area (SQFT)=	21736
Total Basin Area (ACRE)=	0.5

Surface Type	Location	Area (SQFT)	Total (SQFT)	Total (Acre)	% Overall Basin	Surface Runoff Coefficient	Runoff Coefficient for Each Area
Pavement	Road	4842					
			4842	0.11115702	22.28%	0.9	0.1
Building Roofs	Mobile homes	4800					
			4800	0.11019284	22.08%	0.9	0.1
Gravel Area	Everywhere else	12094					
			12094	0.27764004	55.64%	0.8	0.2
		Total=	21736	0.50	100.00%		0.4
					Composite Runoff Coefficient		**0.84**

Runoff Coefficient Calculations	
Project:	Delta Drive Subdivision
Owner:	Bicknell Inc.
Date:	11/19/2020
Prepared By:	M. Minsch
Checked By:	M. Pusich

Pipe P-3: Existing 12" CPP	
Total Basin Area (SQFT)=	10626
Total Basin Area (ACRE)=	0.24

Surface Type	Location	Area (SQFT)	Total (SQFT)	Total (Acre)	% Overall Basin	Surface Runoff Coefficient	Runoff Coefficient for Each Area
Pavement	Road	5115					
			5115	0.11742424	48.14%	0.9	0.1
Gravel Area	Everywhere else	5511					
			5511	0.12651951	51.87%	0.8	0.1
		Total=	10626	0.24	100.00%		0.2
					Composite Runoff Coefficient		**0.84**

Pipe P-4: Existing 12" CPP Culvert	
Total Basin Area (SQFT)=	21786
Total Basin Area (ACRE)=	0.50

Surface Type	Location	Area (SQFT)	Total (SQFT)	Total (Acre)	% Overall Basin	Runoff Coefficient	Runoff Coefficient for Each Area
Pavement	Road	7037					
			7037	0.16154729	32.30%	0.9	0.1
Gravel Area	Everywhere else	14750					
			14750	0.33861341	67.70%	0.8	0.3
		Total=	21786	0.50	100.00%		0.4
					Composite Runoff Coefficient		**0.83**

Appendix D
Time of Concentration

Time of Concentration Calculations		
Project:	Delta Drive Subdivision	PDC ENGINEERS PLAN • DESIGN • CONSTRUCT A RESPEC COMPANY 9109 Mendenhall Mall Rd, Ste. 4, Juneau, AK 99801 907.780.6060 | AECC605
Owner:	Bicknell Inc.	
Date:	11/19/2020	
Prepared By:	M. Minsch	
Checked By:	M. Pusich	

Pipe P-1: Existing 12" CPP Culvert	
Time of Concentration	
Distance of Flow (Ft):	393
Time of concentration velocity factor:	20
Slope of Flow Path (Ft/Ft):	0.01
Velocity (Ft/Sec):	2
Time of Concentration (Min):	13.10

Pipe P-2: Proposed 12" CPP Culvert	
Time of Concentration	
Distance of Flow (Ft):	338
Time of concentration velocity factor:	20
Slope of Flow Path (Ft/Ft):	0.01
Velocity (Ft/Sec):	2
Time of Concentration (Min):	11.27

Pipe P-3: Existing 12" CPP Culvert	
Time of Concentration	
Distance of Flow (Ft):	388
Time of concentration velocity factor:	20
Slope of Flow Path (Ft/Ft):	0.01
Velocity (Ft/Sec):	2
Time of Concentration (Min):	12.93

Pipe P-4: Existing 12" CPP Culvert	
Time of Concentration	
Distance of Flow (Ft):	498
Time of concentration velocity factor:	20
Slope of Flow Path (Ft/Ft):	0.01
Velocity (Ft/Sec):	2
Time of Concentration (Min):	16.60

Appendix E
Rainfall Intensity

NOAA Atlas 14, Volume 7, Version 2
Location name: Juneau, Alaska, USA*
Latitude: 58.3922°, Longitude: -134.5604°
Elevation: 50.42 ft**
* source: ESRI Maps
** source: USGS

POINT PRECIPITATION FREQUENCY ESTIMATES

Sanja Perica, Douglas Kane, Sarah Dietz, Kazungu Maitaria, Deborah Martin, Sandra Pavlovic, Ishani Roy, Svetlana Stuefer, Amy Tidwell, Carl Trypaluk, Dale Unruh, Michael Yekta, Erica Betts, Geoffrey Bonnin, Sarah Heim, Lillian Hiner, Elizabeth Lilly, Jayashree Narayanan, Fenglin Yan, Tan Zhao

NOAA, National Weather Service, Silver Spring, Maryland
and
University of Alaska Fairbanks, Water and Environmental Research Center

PF_tabular | PF_graphical | Maps_&_aerials

PF tabular

PDS-based point precipitation frequency estimates with 90% confidence intervals (in inches/hour)[1]

Duration	Average recurrence interval (years)									
	1	2	5	10	25	50	100	200	500	1000
5-min	1.74 (1.40-2.21)	2.03 (1.61-2.62)	2.52 (1.94-3.34)	2.94 (2.22-3.97)	3.50 (2.58-4.86)	3.95 (2.84-5.59)	4.38 (3.10-6.34)	5.05 (3.49-7.45)	5.95 (4.01-9.01)	6.62 (4.38-10.2)
10-min	1.16 (0.936-1.48)	1.36 (1.08-1.76)	1.69 (1.31-2.24)	1.97 (1.49-2.66)	2.35 (1.73-3.26)	2.65 (1.91-3.75)	2.94 (2.08-4.25)	3.40 (2.35-5.01)	4.00 (2.69-6.05)	4.45 (2.94-6.86)
15-min	0.908 (0.728-1.16)	1.06 (0.840-1.37)	1.32 (1.02-1.75)	1.54 (1.16-2.08)	1.84 (1.35-2.55)	2.06 (1.49-2.92)	2.30 (1.62-3.32)	2.65 (1.83-3.90)	3.12 (2.10-4.72)	3.47 (2.30-5.35)
30-min	0.602 (0.484-0.766)	0.704 (0.556-0.908)	0.876 (0.676-1.16)	1.02 (0.770-1.38)	1.22 (0.896-1.69)	1.37 (0.986-1.94)	1.52 (1.07-2.20)	1.76 (1.22-2.59)	2.07 (1.39-3.13)	2.30 (1.52-3.55)
60-min	0.413 (0.332-0.525)	0.482 (0.381-0.622)	0.600 (0.463-0.794)	0.699 (0.528-0.944)	0.834 (0.613-1.16)	0.939 (0.676-1.33)	1.04 (0.736-1.51)	1.20 (0.833-1.78)	1.42 (0.955-2.14)	1.58 (1.04-2.43)
2-hr	0.306 (0.246-0.390)	0.358 (0.283-0.462)	0.447 (0.345-0.592)	0.520 (0.394-0.703)	0.622 (0.457-0.862)	0.698 (0.503-0.990)	0.775 (0.547-1.12)	0.894 (0.619-1.32)	1.05 (0.710-1.59)	1.17 (0.776-1.81)
3-hr	0.270 (0.217-0.343)	0.315 (0.249-0.407)	0.394 (0.304-0.521)	0.459 (0.347-0.620)	0.548 (0.403-0.761)	0.616 (0.444-0.872)	0.683 (0.482-0.987)	0.788 (0.545-1.16)	0.927 (0.625-1.40)	1.03 (0.683-1.59)
6-hr	0.218 (0.175-0.277)	0.255 (0.201-0.328)	0.317 (0.245-0.420)	0.369 (0.279-0.498)	0.441 (0.324-0.612)	0.496 (0.357-0.703)	0.551 (0.389-0.796)	0.636 (0.440-0.938)	0.748 (0.505-1.13)	0.834 (0.552-1.29)
12-hr	0.163 (0.131-0.207)	0.190 (0.150-0.245)	0.234 (0.181-0.310)	0.271 (0.205-0.366)	0.324 (0.238-0.450)	0.368 (0.265-0.521)	0.414 (0.292-0.598)	0.478 (0.331-0.705)	0.563 (0.380-0.852)	0.627 (0.415-0.968)
24-hr	0.118 (0.107-0.131)	0.138 (0.124-0.155)	0.167 (0.147-0.192)	0.192 (0.166-0.225)	0.230 (0.194-0.275)	0.262 (0.218-0.319)	0.298 (0.243-0.369)	0.344 (0.276-0.434)	0.405 (0.317-0.522)	0.451 (0.348-0.591)
2-day	0.080 (0.073-0.089)	0.093 (0.083-0.104)	0.111 (0.098-0.128)	0.127 (0.110-0.148)	0.150 (0.127-0.180)	0.170 (0.141-0.207)	0.192 (0.156-0.237)	0.219 (0.176-0.276)	0.255 (0.200-0.329)	0.283 (0.218-0.370)
3-day	0.063 (0.058-0.070)	0.073 (0.065-0.082)	0.087 (0.076-0.100)	0.098 (0.085-0.115)	0.116 (0.098-0.138)	0.130 (0.108-0.158)	0.146 (0.119-0.181)	0.166 (0.133-0.209)	0.192 (0.151-0.248)	0.212 (0.163-0.278)
4-day	0.054 (0.049-0.060)	0.062 (0.055-0.069)	0.073 (0.064-0.084)	0.082 (0.071-0.096)	0.096 (0.081-0.115)	0.108 (0.090-0.132)	0.121 (0.099-0.150)	0.137 (0.110-0.173)	0.158 (0.124-0.204)	0.174 (0.134-0.228)
7-day	0.040 (0.036-0.044)	0.045 (0.041-0.051)	0.053 (0.047-0.061)	0.060 (0.052-0.070)	0.070 (0.059-0.084)	0.079 (0.065-0.096)	0.088 (0.072-0.109)	0.100 (0.080-0.126)	0.116 (0.091-0.149)	0.127 (0.098-0.167)
10-day	0.033 (0.030-0.037)	0.038 (0.034-0.042)	0.044 (0.039-0.051)	0.050 (0.043-0.058)	0.058 (0.049-0.069)	0.065 (0.054-0.079)	0.073 (0.059-0.090)	0.082 (0.066-0.104)	0.095 (0.075-0.123)	0.105 (0.081-0.138)
20-day	0.025 (0.023-0.028)	0.029 (0.026-0.032)	0.034 (0.030-0.039)	0.038 (0.032-0.044)	0.043 (0.037-0.052)	0.048 (0.040-0.059)	0.053 (0.044-0.066)	0.060 (0.048-0.076)	0.068 (0.054-0.088)	0.075 (0.058-0.098)
30-day	0.022 (0.020-0.025)	0.025 (0.023-0.029)	0.030 (0.026-0.034)	0.033 (0.029-0.039)	0.038 (0.032-0.046)	0.042 (0.035-0.051)	0.046 (0.038-0.058)	0.052 (0.041-0.065)	0.058 (0.046-0.075)	0.064 (0.049-0.083)
45-day	0.020 (0.018-0.022)	0.023 (0.021-0.026)	0.027 (0.023-0.031)	0.030 (0.026-0.035)	0.034 (0.029-0.040)	0.037 (0.031-0.045)	0.041 (0.033-0.050)	0.044 (0.036-0.056)	0.050 (0.039-0.064)	0.054 (0.041-0.070)
60-day	0.018 (0.017-0.020)	0.021 (0.019-0.024)	0.024 (0.022-0.028)	0.027 (0.023-0.032)	0.031 (0.026-0.037)	0.033 (0.028-0.041)	0.036 (0.029-0.045)	0.039 (0.031-0.049)	0.042 (0.033-0.054)	0.045 (0.035-0.059)

[1] Precipitation frequency (PF) estimates in this table are based on frequency analysis of partial duration series (PDS).

Numbers in parenthesis are PF estimates at lower and upper bounds of the 90% confidence interval. The probability that precipitation frequency estimates (for a given duration and average recurrence interval) will be greater than the upper bound (or less than the lower bound) is 5%. Estimates at upper bounds are not checked against probable maximum precipitation (PMP) estimates and may be higher than currently valid PMP values.

Please refer to NOAA Atlas 14 document for more information.

Back to Top

https://hdsc.nws.noaa.gov/hdsc/pfds/pfds_printpage.html?lat=58.3922&lon=-134.5604&data=intensity&units=english&series=pds

PF graphical

PDS-based intensity-duration-frequency (IDF) curves
Latitude: 58.3922°, Longitude: -134.5604°

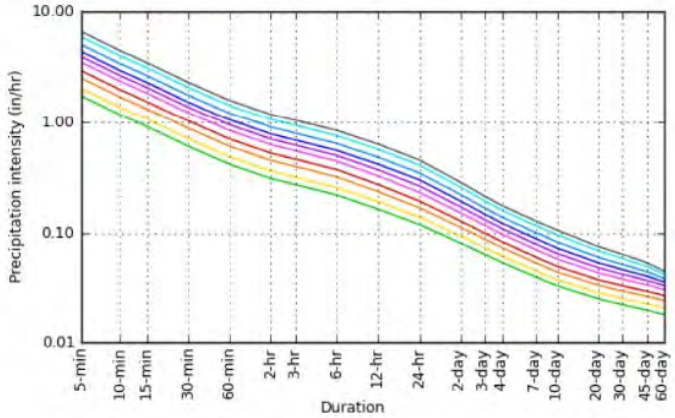

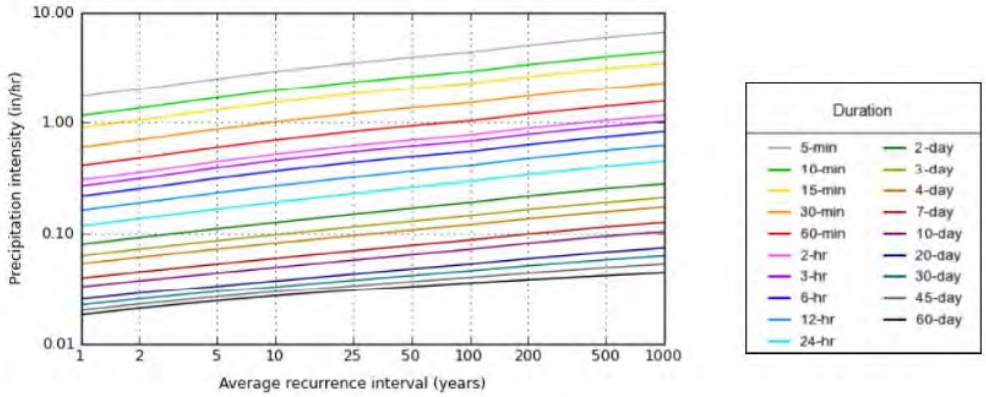

NOAA Atlas 14, Volume 7, Version 2 Created (GMT): Thu Nov 19 20:30:02 2020

https://hdsc.nws.noaa.gov/hdsc/pfds/pfds_printpage.html?lat=58.3922&lon=-134.5604&data=intensity&units=english&series=pds

Maps & aerials

Small scale terrain

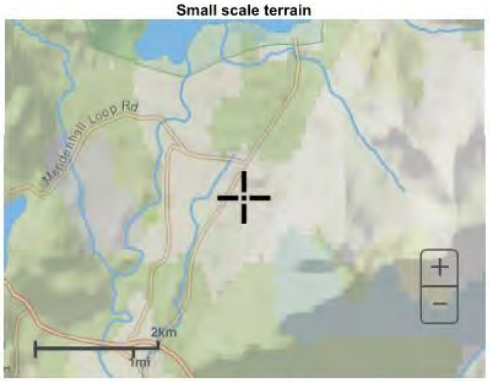

Large scale terrain

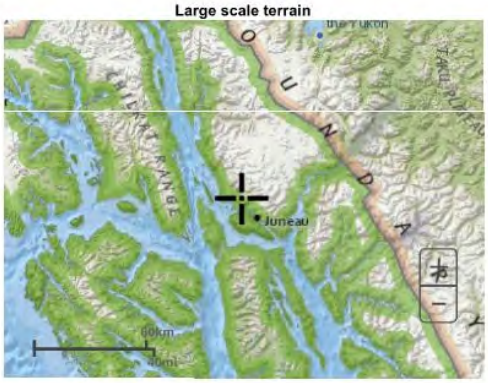

Large scale map

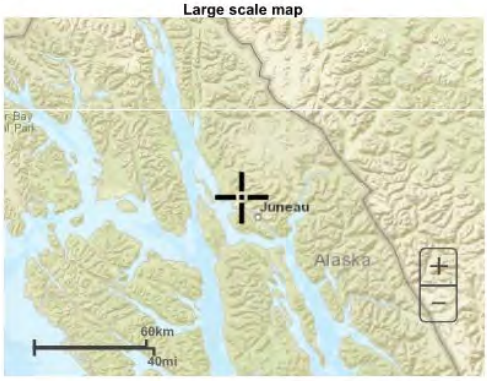

Large scale aerial

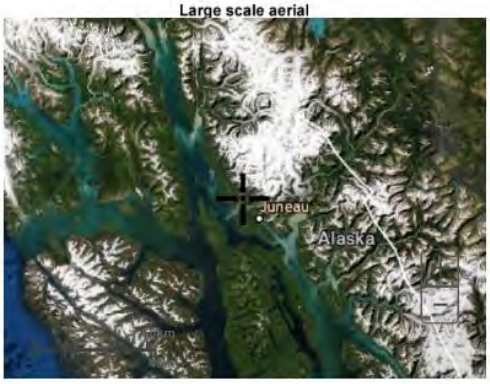

https://hdsc.nws.noaa.gov/hdsc/pfds/pfds_printpage.html?lat=58.3922&lon=-134.5604&data=intensity&units=english&series=pds

Appendix F
Existing & Proposed Capacity Calcs

Discharge Capacity Calculations		
Project:	Delta Drive Subdivision	PDC ENGINEERS PLAN • DESIGN • CONSTRUCT A RESPEC COMPANY 9109 Mendenhall Mall Rd, Ste. 4, Juneau, AK 99801 907.780.6060 | AECC605
Owner:	Bicknell Inc.	
Date:	11/19/2020	
Prepared By:	M. Minsch	
Checked By:	M. Pusich	

The following equation was used to calculate the capacity of pipes P-1, P-2, P-3 and P-4 that drain into the existing Delta Drive ditch system. Capacity was also calculated for the 18" CPP culvert that will transport all of the water discharged from the proposed site into the Delta Drive storm system. The equation is from "Urban Drainage Design Manual: Hydraulic Engineering Circular No. 22, Third Edition."

$$Q = (\mathrm{K/n}) \text{ x A x } R^{0.67} \text{x } S^{0.5}$$

Q= Discharge in cubic feet per second (cfs)
K = Coefficient for English units (1.486)
n = Manning's coefficient of roughness, obtained from Table 5-3, Page 5-5, of the CBJ Stormwater Manual
A = Cross sectional area in square feet
R = Hydraulic radius
S= Slope

Pipe P-1: Existing 12" CPP Culvert

Inlet Invert=95.19, Outlet Invert=94.98, Length=43', n=0.014. The Manning's n value of 0.014 was determined by the pipe type (CPP-smooth interior) Table 5-3.

	k	n	A	R	S		
Q (cfs)	1.486	0.014	0.79	.25	0.006	=	2.57

Pipe P-2: Proposed 12" CPP Culvert

Inlet Invert=96.55, Outlet Invert=96.20, Length=70', n=0.014. The Manning's n value of 0.014 was determined by the pipe type (CPP-smooth interior) Table 5-3.

	k	n	A	R	S		
Q (cfs)	1.486	0.014	0.79	0.25	0.005	=	2.34

Pipe P-3: Existing 12" CPP Culvert

Inlet Invert=95.21, Outlet Invert=94.88, Length=54', n=0.014. The Manning's n value of 0.014 was determined by the pipe type (CPP-smooth interior) Table 5-3.

	k	n	A	R	S		
Q (cfs)	1.486	0.014	0.79	0.25	0.0061	=	2.59

Pipe P-4: Existing 12" CPP Culvert

Inlet Invert=95.84, Outlet Invert=94.88, Length=5', n=0.014. The Manning's n value of 0.014 was determined by the pipe type (CPP-smooth interior) Table 5-3.

	k	n	A	R	S		
Q (cfs)	1.486	0.014	0.79	0.25	.1920	=	14.51

Pipe P-5: Existing 18" CPP Culvert

Inlet Invert=95.21, Outlet Invert=94.88, Length=5', n=0.014. The Manning's n value of 0.014 was determined by the pipe type (CPP-smooth interior) Table 5-3.

	k	n	A	R	S		
Q (cfs)	1.486	0.014	1.77	0.375	.004	=	14

CITY AND BOROUGH OF JUNEAU
ALASKA'S CAPITAL CITY

Engineering & Public Works Department
155 South Seward Street
Juneau, Alaska 99801
Phone: 907-586-0800 | Fax: 907-463-2606

DATE: December 12, 2020

TO: Laurel Christian, CDD

FROM: Autumn Sapp, Engineering & Public Works Department

RE: SMP20200004 – Delta Drive Subdivision, Major Subdivision Engineering & Public Works Department Review

Engineering and Public Works Department has completed a preliminary review of the proposed Delta Drive Subdivision to create a total of 15 lots. The following has been determined as required by CBJ code 49.15.402(c)(4)(e):

1. The submitted drainage plan is conforms to drainage and water quality requirements. The plan is approved by Engineering.

2. The Delta Drive Subdivision will not change the current connection with Delta Drive and the existing configuration is acceptable.

3. The proposed improvements conform to the requirements of this title and can be feasibly constructed in accordance with Title 49.

Invitation to Comment

On a proposal to be heard by the CBJ Planning Commission

Your Community, Your Voice

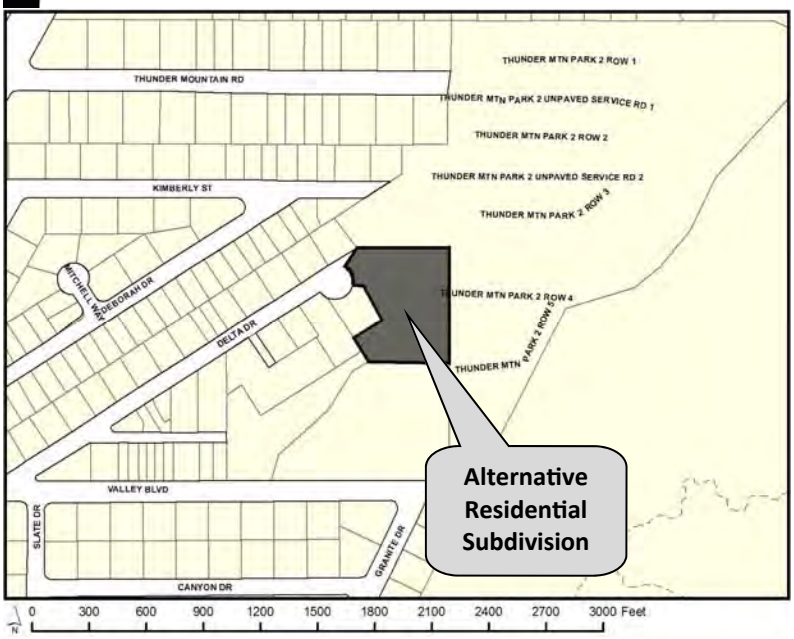

CITY AND BOROUGH OF JUNEAU
ALASKA'S CAPITAL CITY
COMMUNITY DEVELOPMENT
155 S. Seward Street Juneau, Alaska 99801

TO:

An application has been submitted for consideration and public hearing by the Planning Commission for an **Alternative Residential Subdivision creating 15 lots** at **4090 Delta Drive** in a **D18 zone**.

TIMELINE

Staff Report expected to be posted **Monday, January 4, 2020** at **https://juneau.org/community-development/planning-commission.** Find hearing results, meeting minutes and more here as well.

Now through Dec. 21	Dec. 22 — noon, Jan. 11	HEARING DATE & TIME: 7:00 pm, Jan. 12, 2021	Jan. 13
Comments received during this period will be sent to the Planner, **Laurel Christian,** to be included as an attachment in the staff report.	Comments received during this period will be sent to Commissioners to read in preparation for the hearing.	This virtual meeting will be by video and telephonic participation only. To join the Webinar, visit: https://juneau.zoom.us/j/93626358724. The Webinar ID is: 936 2635 8724. To join by telephone, call: +1 253 215 8782 or +1 346 248 7799 or +1 669 900 6833 or +1 301 715 8592 or +1 312 626 6799 or +1 929 436 2866 and enter the Webinar ID.	The results of the hearing will be posted online.

Phone: **(907)586-0715** ◆ Email: **pc_comments@juneau.org**
Mail: **Community Development, 155 S. Seward St, Juneau AK 99801**

Case No.: SMP2020 0004/ARP2020 0001
Parcel No.: 5B2401620011
CBJ Parcel Viewer: http://gis.juneau.org

Laurel Christian

From: dblommer@bicknellinc.com
Sent: Monday, December 28, 2020 10:23 AM
To: Laurel Christian
Subject: Delta Dr Sign Posted
Attachments: Resized_20201228_092437.jpeg

EXTERNAL E-MAIL: BE CAUTIOUS WHEN OPENING FILES OR FOLLOWING LINKS

Hi Laurel,

Here is the picture of the sign at Delta Dr. Let me know if we need to do anything else.

Thanks,
David

CITY AND BOROUGH OF JUNEAU
ALASKA'S CAPITAL CITY
COMMUNITY DEVELOPMENT

(907) 586-0757
Jill.Maclean@juneau.org
www.juneau.org/CDD
155 S. Seward Street • Juneau, AK 99801

MEMO

From: **Jill Maclean, AICP, Director**

To: **Michael LeVine, Planning Commission Chair**

Case Number: **ARP2020 0001 and SMP2020 0004**

RE: Staff Report Correction

Staff received several questions and requests for clarification on staff reports ARP2020 0001 and SMP2020 0004. Below, please find corrections and / or additional clarification. Items bolded are necessary revisions or corrections to the staff report.

ARP2020 0001:

- **Page 3 of 12 (packet page 61): Inaccurately states that only single-family and accessory apartments are permissible. The Alternative Residential Subdivision (ARS) ordinance allows for residential uses (49.15.920(m)), including multifamily dwellings, e.g. condominiums, and is not restricted to single-family dwellings. The residential uses follow the underlying zoning district.**

SMP2020 0004:

- Page 4 of 8 (packet page 149): Clarifying that the staff report is accurate for the number of dwelling units proposed on this site. Density, under the ARS 49.15.920(e)(1) *Density*, is calculated by, *"The number of dwelling units permitted in the development shall be calculated by multiplying the maximum number of dwelling units per gross acre permitted in the underlying zoning district by the number of acres in the alternative residential subdivision and rounding to the nearest whole number."*
    - In this situation, the parent lot is 79,189 square feet in a D18 zoning district. Minimum lot size is 5,000 square feet, and the maximum number of dwelling units is 33. The developer is proposing 14 dwelling units.
    - In other words, the density is based upon the acreage of the parent lot; and a developer may choose how to divvy up the density; and even if a unit-lot on its own meets or exceeds the minimum lot size of the underlying zoning district, additional units are not permissible if the maximum number of dwelling units already exists on the other unit lots. This does not include density bonuses, which are not a consideration for this project.
    - Should the developer choose to modify the type of dwellings or add additional dwelling units, a modification to the plat and / or the Alternative Residential Plan may be required depending on the proposal.

- Page 5 of 8 (packet page 150): Clarifying that the staff report is accurate. Roads within an ARS development may be private *or* public (if the developer builds to city standards, the road may be adopted as a public street).
    - An ARS is permitted to have a private access roads within the development, if the criteria in 49.15.920(f) is met, and these are listed and discussed in the table. The table establishes that the ARS meets the criteria for private access within the development.
    - Exempting the access within the development from 49.35 does not exempt the parent lot from fronting and accessing onto a publically maintained right-of-way. Access to the development must be through a public right-of-way – this is criteria is met, because the parent lot fronts accesses onto Delta Drive.

Page 4 of 8 (packet page 149) Plat Notes:

- **First Plat Note on this page is not completely accurate and should be DELETED.** Plat Note Reads: At time of recording, Lots 2 through 11 and 13 through 15 are limited to one single-family dwelling. Lot 12 may be permitted one single-family dwelling and one accessory apartment. See CBJ 49.15 article ix for current regulations.
    - (Note: Generally, in multi-family zoning districts, units are units and are not considered "accessory apartments" because multiple units are permitted on one lot).

- Third Plat Note should be clarified to read:
    - **Plat Note: Per CBJ 49.15.920(j), No parking areas, dwelling units, unit-lots, or permissible uses may be located within the perimeter buffer. Access to the development may cross a portion of the buffer.**

Planning Commission

(907) 586-0715
PC_Comments@juneau.org
www.juneau.org/plancomm
155 S. Seward Street • Juneau, AK 99801

PLANNING COMMISSION
NOTICE OF DECISION

Date: January 25, 2021
File No.: ARP2020 0001

Bicknell, Inc.
Attn: David Blommer
P.O. Box 33517
Juneau, AK 99803

Proposal:	Applicant proposes an Alternative Residential Subdivision creating 15 lots
Property Address:	4090 Delta Drive
Legal Description:	Thunder Mountain Park Tract 1A
Parcel Code No.:	5B2401620011
Hearing Date:	January 12, 2021

The Planning Commission, at its regular public meeting, adopted the analysis and findings listed in the attached memorandum dated December 29, 2020, and late file memorandum (provided January 12, 2021) with amendments and approved the Alternative Residential Subdivision Preliminary Plan for a 15-lot subdivision to be conducted as described in the project description and project drawings submitted with the application (and with the following conditions :)

1. Prior to approval of the Final Alternative Residential Subdivision Plan, the applicant shall submit homeowners association, or similar, documents that comply with the requirements of 49.15.950(b);
2. Prior to the issuance of the eleventh (11) temporary certificate of occupancy for the development, access to and within the development shall be paved;
3. Prior to the issuance of the first temporary certificate of occupancy, the master water meter for the development shall be installed by the developer; and
4. Per CBJ 49.15.920(o), the final mailbox location shall be reviewed and approved by the CDD Director, and installed prior to the issuance of the first temporary certificate of occupancy.

Attachments: December 29, 2020, memorandum from Laurel Christian, Community Development, to the CBJ Planning Commission regarding ARP2020 0001; and memorandum from Jill Maclean, Director, AICP, Community Development regarding ARP2020 0001 and SMP2020 0004 provided January 12, 2021.

This Notice of Decision does not authorize construction activity. Prior to starting any project, it is the applicant's responsibility to obtain the required building permits.

This Notice of Decision constitutes a final decision of the CBJ Planning Commission. Appeals must be brought to the CBJ Assembly in accordance with CBJ §01.50.030. Appeals must be filed by 4:30 P.M. on the day twenty days from the date the decision is filed with the City Clerk, pursuant to CBJ §01.50.030 (c). Any action by the applicant in reliance on the decision of the Planning Commission shall be at the risk that the decision may be reversed on appeal (CBJ §49.20.120).

Effective Date: The permit is effective upon approval by the Commission, January 12, 2021.

Expiration Date: The permit will expire 18 months after the effective date, or July 12, 2022, if no Building Permit has been issued and substantial construction progress has not been made in accordance with the plans for which the development permit was authorized. Application for permit extension must be submitted thirty days prior to the expiration date.

Michael LeVine, Chair Planning Commission	January 26, 2021 Date
Filed With City Clerk	January 26, 2021 Date

cc: Plan Review

NOTE: The Americans with Disabilities Act (ADA) is a federal civil rights law that may affect this development project. ADA regulations have access requirements above and beyond CBJ-adopted regulations. Owners and designers are responsible for compliance with ADA. Contact an ADA - trained architect or other ADA trained personnel with questions about the ADA: Department of Justice (202) 272-5434, or fax (202) 272-5447, NW Disability Business Technical Center (800) 949-4232, or fax (360) 438-3208.

CITY AND BOROUGH OF JUNEAU
ALASKA'S CAPITAL CITY
COMMUNITY DEVELOPMENT

PLANNING COMMISSION STAFF REPORT
ALTERNATIVE RESIDENTIAL SUBDIVISION PLAN
ARP2020 0001
HEARING DATE: JANUARY 12, 2020

(907) 586-0715
CDD_Admin@juneau.org
www.juneau.org/CDD
155 S. Seward Street • Juneau, AK 99801

DATE: December 29, 2020

TO: Michael LeVine, Chair, Planning Commission

BY: Laurel Christian, Planner II

THROUGH: Jill Maclean, Director, AICP

PROPOSAL: Preliminary Plan approval for the Delta Drive Subdivision, an Alternative Residential Subdivision creating 14 unit-lots and 1 parent lot

STAFF RECOMMENDATION: Approval with conditions

KEY CONSIDERATIONS FOR REVIEW:

- 14 lots will be for single-family dwellings.
- The remaining parent lot will contain the perimeter buffer, privately maintained access road, and other common amenities.
- A density bonus is not requested.
- The proposed perimeter buffer is equal to the setbacks for the zoning district.
- This approval is subject to SMP20200004.

GENERAL INFORMATION	
Property Owner	Bicknell Inc.
Applicant	Bicknell Inc.
Property Address	4090 Delta Drive
Legal Description	Thunder Mountain Park Tract 1A
Parcel Number	5B2401620011
Zoning	D18 Multi-family Residential
Lot Size	79,189 sq. ft.
Water/Sewer	Public
Access	Delta Drive
Existing Land Use	Vacant
Associated Applications	SMP20200004

ALTERNATIVE ACTIONS:

1. **Amend:** require additional conditions, or delete or modify the recommended conditions.
2. **Deny:** deny the permit and adopt new findings for items 1-14 below that support the denial.
3. **Continue:** to a future meeting date if determined that additional information or analysis is needed to make a decision, or if additional testimony is warranted.

ASSEMBLY ACTION REQUIRED:

Assembly action is not required for this permit.

STANDARD OF REVIEW:

- Quasi-judicial decision
- Requires five (5) affirmative votes for approval
- Code Provisions:
  - 49.15.920
  - 49.15.930
  - 49.15.940

The Commission shall hear and decide the case per *49.15.900 - Purpose.* *The general purpose of this article is to provide reasonable minimum standards and procedures for unit-lot residential communities in which all or some of the lots do not substantially conform to the minimum requirements for a traditional subdivided lot. This article provides a housing option to allow dwellings on unit-lots to be conveyed by long-term leases, less than fee-simple ownership, or fee-simple ownership, including condominium and other common-interest communities*

SITE FEATURES AND ZONING

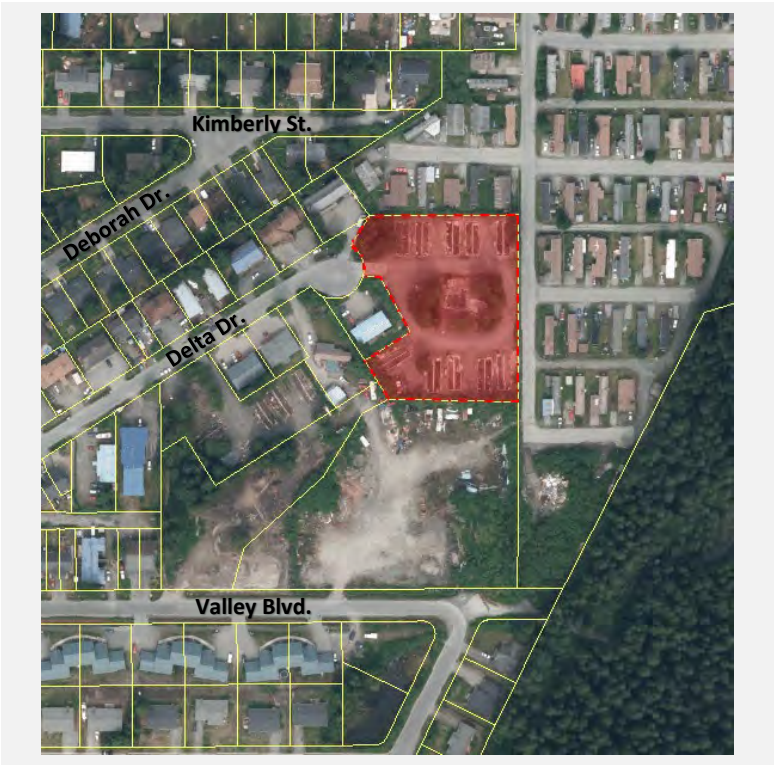

SURROUNDING ZONING AND LAND USES	
North (D18)	Thunder Mountain Mobile Home Park
South (D18)	Vacant
East (D18)	Thunder Mountain Mobile Home Park
West (D18)	Multi-family four-plex

SITE FEATURES	
Anadromous	None
Flood Zone	None
Hazard	None
Hillside	None
Wetlands	None
Parking District	None
Historic District	None
Overlay Districts	None

BACKGROUND INFORMATION

Project Description – The applicant requests a preliminary plan approval for the Delta Drive Subdivision, an Alternative Residential Subdivision (ARS) creating 15 lots. The proposal would create 14 unit-lots for single-family dwellings and one (1) parent-lot containing the perimeter buffer, privately maintained access road, and other common amenities (15 lots total).

A project narrative can be found in Attachment A and the preliminary plan can be found in Attachment B.

Background – Background information includes a discussion of the basics of the ARS, the process for approval, and relevant development history for the lot.

ARS Design Basics

The ARS provides flexibility in land use regulations in order to promote its most appropriate use for unit-lot residential communities: to encourage residential developments that are planned, designed and developed to function as integral units with common facilities.

The ARS facilitates the construction of housing in a flexible design through:

- Allowing smaller-than-required lot sizes;
- Providing density bonuses for certain amenities if desired; and
- Allowing private streets and utilities to serve the community.

There are two types of lots in an ARS:

- *Parent lot means the original lot and the residual area from which unit-lots are created through an alternative residential subdivision.*
  - The parent lot has the original lot boundaries; provides a buffer between unit lots and surrounding development, and access to unit lots; and may be developed with common amenities [CBJ 49.15.920(m)].
  - The perimeter buffer on the parent lot provides at least the minimum required yard setbacks of the zoning district. The Commission may enlarge or reduce a buffer in certain circumstances [CBJ 49.15.920(j)].

- *Unit-lot means any lot, site, parcel, unit-site, and similar geographically defined property that is created through an alternative residential subdivision and that is substantially smaller than the minimum lot size required for the zoning district.*
  - The unit lots are the small lots within an ARS that are platted for residential uses. Unit lots have no dimensional requirements.
  - Unit lots may only be developed with single-family dwellings, or single-family dwellings with accessory apartments, home occupations, or childcare homes in certain circumstances [CBJ 49.15.920(m)].

In the image below, the parent lot is highlighted in yellow and the unit lots are highlighted in blue. The preliminary plan can be found in Attachment B.

ARS Process

The ARS process requires two preliminary applications, both of which are being presented at the same Planning Commission meeting.

- This application (ARP20200001) is for review of the preliminary *plan* for the ARS. This application must be acted upon first. The plan is reviewed for compliance with applicable ARS code and design guidelines [CBJ 49.15.900].
- A separate application (SMP20200004) is for approval of the preliminary *plat* for the ARS. The plat is reviewed for compliance with subdivision code [CBJ 49.15.402].

If the preliminary plan and preliminary plat are approved, the developer may apply for review of the ARS final plan and ARS final plat. These two applications may be presented at the same public meeting, or separately. The purpose of a second review by the Commission is to ensure the final plan conforms with the approved preliminary plan and that any conditions of approval have been met.

Development History

The table below summarizes relevant history for the lot and proposed development.

Item	Summary
Plat History	In 1992, the lot was platted as an expansion of the Thunder Mountain Park (plat no. 92-18). No restrictive plat notes exist for the lot.
Land Use Cases	In 1992, a conditional use permit (CUP) was issued to expand the Thunder Mountain Mobile Home park onto the lot (USE-CU92-01). In 2013, another CUP was issued for a 12-unit apartment building on the lot; this permit expired (USE20130017). The lot is currently vacant.
Building Permits	In 1992, a building permit was issued to place 10 modular homes on permanent concrete foundations (BLD-0747301). In 2013, a demolition permit was issued to remove the modular homes (DMO20130007). The lot currently contains the 10 concrete foundations with no modular structures. The applicant intends to repurpose the foundations.

ANALYSIS

Phasing – The proposed ARS will not be phased.

Zoning District and Dimensional Standards – The parent lot meets or exceeds dimensional requirements for an ARS in the D18 zoning district.

Topic and Code Reference	Summary	Complies
49.15.920(b) Zoning Districts	The lot is within the D18 multi-family zoning district. ARS is allowed in this zoning district.	☒ Yes ☐ No ☐ N/A
49.15.920(c) Lot Size	The parent lot measures 79,189 square feet and exceeds the required 150 percent times the minimum lot size for the D18 zoning district (5,000 square feet).	☒ Yes ☐ No ☐ N/A

Topic and Code Reference	Summary	Complies
49.15.920(d) Other Dimensional Standards	The minimum lot dimensions, lot coverage, and vegetative coverage shall be applied to the parent lot and not the unit-lots. Preliminary construction drawings show these requirements can reasonably be met.	☒ Yes ☐ No ☐ N/A

Density – Per 49.15.920(e)(1), *The number of dwelling units permitted in the development shall be calculated by multiplying the maximum number of dwelling units per gross acre permitted in the underlying zoning district by the number of acres in the alternative residential subdivision and rounding to the nearest whole number.*

Maximum Dwelling Units Per Acre	Parent Lot Size	Maximum Density	Number of Dwelling Units Proposed
18	79,189 sq. ft. (1.8179 acres)	33 dwelling units	**14**

The proposed ARS creates 14 unit-lots for single-family dwellings and one (1) parent-lot for common elements. As demonstrated in the table above, the applicant is not exceeding the maximum allowed density for the zoning district.

Density Bonus – The applicant has not requested a density bonus.

Frontage and Access – Per 49.15.920(f), *The parent lot shall front on and be accessed by a publically maintained right-of-way. Access within the development may be exempted from 49.35 and be privately owned and maintained if it complies with the following requirements* (listed in the table below).

The parent lot has frontage and access onto Delta Drive, a CBJ right-of-way. The applicant proposes a privately maintained access within the ARS. The privately maintained access will be 20 feet in width and paved. The proposed access complies with CBJ 49.15.920(f), as discussed in the table below.

Topic and Code Reference	Summary	Complies	Recommended Condition
49.15.920(f)(1) Location	As shown on the preliminary construction drawings, the access road will be located completely on the parent lot.	☒ Yes ☐ No ☐ N/A	
49.15.920(f)(2) Safety	There is no information that suggests the proposed access will endanger public safety.	☒ Yes ☐ No ☐ N/A	
49.15.920(f)(3) Emergency Services	CCFR has reviewed the preliminary construction drawings and finds the proposed access is sufficient for emergency service response.	☒ Yes ☐ No ☐ N/A	
49.15.920(f)(4) Pavement	As shown on the preliminary construction drawings, the applicants propose a 20-foot wide asphalt surface.	☒ Yes ☐ No ☐ N/A	**Condition: Prior to the issuance of the first temporary certificate of occupancy, access to and within the development shall be paved.**

49.15.920(f)(5) Homeowners Association (HOA)	The ARS requires an HOA, or similar entity be created for the development. The HOA documents should be submitted with the final ARS plan. It is recommended that the applicant submit HOA, or similar, documents prior to approval of the final plan. The HOA documents shall establish that maintenance of the private access is the responsibility of the HOA.	☒ Yes ☐ No ☐ N/A	**Condition: Prior to approval of the Final Alternative Residential Subdivision Plan, the applicant shall submit homeowners association, or similar, documents that comply with the requirements of 49.15.950(b).**
49.15.920(f)(6) Abutting Parcels	All abutting parcels have direct and practical access onto an existing publically maintained right-of-way, so no new public rights-of-way are required.	☒ Yes ☐ No ☐ N/A	

Utilities, Drainage, and Stormwater Management – The applicant has submitted preliminary construction drawings, a preliminary water-line memo, and a preliminary drainage report (Attachment C, D, and E)**.** There are 10 existing water and sewer services. The applicant will be required to connect each unit-lot to public water and sewer; the parent-lot is currently connected to water and sewer. After approval of the preliminary plan and preliminary plat, the applicant will submit final construction drawings for review and approval by CBJ Engineering & Public Works. Utilities, drainage, and stormwater management are further discussed in the staff report for SMP20200004.

Topic and Code Reference	Summary	Complies	Recommended Condition
49.15.920(g) Public Utilities	Preliminary construction drawings show each lot will be connected to public water and sewer and a master meter will be installed.	☒ Yes ☐ No ☐ N/A	**Prior to the issuance of the first temporary certificate of occupancy, each dwelling unit shall be connected to public sewer and water, and a master meter for water shall be installed by the developer.**
49.15.920(l) Stormwater Management	Preliminary construction drawings demonstrate water will be collected into drainage swales and underground storm drains, which connect to the existing drainage systems in Delta Drive.	☒ Yes ☐ No ☐ N/A	

Design Requirements – The table below discusses design requirements applied to an ARS. The proposed ARS meets these requirements.

Topic and Code Reference	Summary	Complies	Recommended Condition
49.15.920(i) Open Space	The applicant does not propose common open space for the development. Open space is not required for an ARS in the D18 zoning district.	☐ Yes ☐ No ☒ N/A	
49.15.920(j) Perimeter Buffer	The preliminary plan shows a perimeter buffer surrounding the development that matches the setback requirements for the D18 zoning district. Staff does not recommend an increase in the required perimeter buffer. The proposed ARS is bordered by multi-family development and matches the character of the neighborhood. No density bonus has been requested, and the proposed ARS creates fewer units than the maximum density for the lot.	☒ Yes ☐ No ☐ N/A	
49.15.920(m) Permitted Uses	The applicant proposes single-family residential use. There is one unit-lot within the ARS that meets the minimum lot size for the D18 zoning district (Lot 12). This lot could accommodate a single-family dwelling with an accessory apartment. All other unit-lots would be restricted to one single-family dwelling.	☒ Yes ☐ No ☐ N/A	
49.15.920(n) Street Sign	The CBJ GIS Analyst does not recommend assigning the private access within the ARS a new street name, since it functions as an extension of Delta Drive. Each unit-lot will be assigned a Delta Drive address.	☐ Yes ☐ No ☒ N/A	
49.15.920(o) Mailboxes	Staff met on-site with the applicant and USPS on November 10, 2020. The USPS requested one centralized mailbox for all units that is located outside of the gate to the development, with adequate space for USPS vehicles to turn	☒ Yes ☐ No ☐ N/A	**Condition: Per CBJ 49.15.920(o) the final mailbox location shall be reviewed and approved by the CDD Director, and installed prior to the issuance of the first temporary certificate of occupancy.**

Topic and Code Reference	Summary	Complies	Recommended Condition
	around. Per CBJ 49.15.920(o) the final mailbox location shall be reviewed and approved by the CDD Director. This should be shown on final construction drawings.		

Parking– According to 49.15.920(h), *Parking may be located on the parent lot or unit lots.* Two parking spaces are required for each single-family dwelling [49.40.210(a)]. Preliminary construction drawings show two parking spaces on each unit-lot, some provided in a stacked configuration. Stacked parking is allowed for single-family residential uses [49.40.230(b)(6)].

Traffic – According to CBJ 49.40.300(a)(2) a traffic impact analysis is not required; the development is not anticipated to generate more than 250 Average Daily Trips.

Use	Units	Trips Generated	Total Trips
Single-family	14	9.52 per dwelling	**133.28**

Habitat – There are no known anadromous streams or wetlands on the lot.

Hazard Zones – There are no hazard zones on the lot.

Public Health, Safety, and Welfare – There is no information that suggests the proposed ARS will harm the public health, safety, or welfare.

Property Value and Neighborhood Harmony – The CBJ Assessor stated no objections to the proposed development. There is no information that suggests the proposed development will have a negative effect on property values in the neighboring area.

The lot is located in the D18 zoning district and surrounded primarily by multi-family residential uses. A zoning map can be found in Attachment F. To the north and east is the Thunder Mountain Mobile Home park, to the south is a vacant lot which appears to be used to store construction materials, and to the west is Delta Drive, which is developed primarily with multi-family residential development. To the northwest, Deborah Drive and Kimberly Street are developed primarily with single-family dwellings within the D5 zoning district; these streets do not directly abut the proposed development.

The proposed ARS would create 14 unit-lots for single-family dwellings. The maximum density of the lot, unsubdivided, would be 33 dwelling units. The proposal is not out of character with the existing neighborhood.

AGENCY REVIEW

CDD conducted an agency review comment period between October 15 and October 31, 2020. Comments from Engineering and Public Works, the CBJ Cartographer, and Capital City Fire and Rescue are incorporated into this report. No additional comments were received.

PUBLIC COMMENTS

CDD conducted a public comment period between December 7 and December 21, 2020. Public notice was mailed to property owners within 500 feet of the subject parcel. A public notice sign was also posted on-site two weeks prior to the scheduled hearing. At time of writing this staff report, no public comments were received.

CONFORMITY WITH ADOPTED PLANS

The proposed development is in general conformity with the 2013 Comprehensive Plan, 2016 Housing Action Plan, and the 2015 Juneau Economic Development Plan. Plans call for the development of housing, especially in a flexible format that fits the character of existing neighborhoods and provides housing for a variety of CBJ residents and economic groups.

PLAN	Chapter	Page No.	Item	Summary
2013 Comprehensive Plan	4	36-37	Policy 4.1/4.2	Policies promote providing an adequate supply of various types of housing for all CBJ residents and economic groups.
	10	130	Policy 10.2	Policy promotes flexibility and creativity in residential development within the urban service boundary.
	11	157	Land Use Designation	Complies with the *Medium Density Residential* land use designation which allows for residential development between 5-20 units per acre (Attachment F).
2016 Housing Action Plan	Part 2	35	Production Target	The Housing action plan sets an annual goal of 66 new dwelling units. Proposal creates 14 new housing units.
2015 Juneau Economic Development Plan	5	103	Initiative	Plan calls for promoting housing affordability and availability.

FINDINGS

Alternative Residential Subdivision Preliminary Plan Approval – Per CBJ 49.15.940(d), the director makes the following findings on the proposed Alternative Residential Subdivision Preliminary Plan:

1. ***Does the proposed development protect natural features and avoid natural hazards by reserving them as open space?***

   Analysis: There are no natural features of the lot or natural hazards that should be preserved as open space.

   Finding: Not applicable.

2. ***Is the proposed development consistent with Title 49, the Land Use Code?***

   Analysis: No further analysis needed.

   Finding: Yes. With recommended conditions, the proposed development is consistent with Title 49.

3. **Does the development incorporate perimeter buffers sufficient to minimize off-site impacts of the subdivision and to maximize harmony with the neighborhood?**

   Analysis: The proposed development incorporates a perimeter buffer equal to the setbacks required for the D18 zoning district. The lot is surrounded by multi-family development and is not being developed to the maximum density allowed. Staff finds the perimeter buffer is adequate to ensure neighborhood harmony.

   Finding: Yes. The proposed development incorporates perimeter buffers sufficient to minimize off-site impacts and maximize neighborhood harmony.

4. ***Do utilities proposed for connection to the City and Borough system meet City and Borough standards, and all others are consistent with sound engineering practices, as determined by the City and Borough Engineering and Public Works Department?***

   Analysis: No additional analysis required.

   Finding: Yes. The CBJ Engineering & Public Works Department has reviewed preliminary construction plans and has determined that the development can reasonably connect to CBJ services and meet CBJ standards.

5. ***Does the configuration of the development provide for economy and efficiency in utilities, housing construction, access, parking and circulation?***

   Analysis: The proposal will develop a lot that has been vacant since 2013. The development will repurpose existing foundations and utilities provided to the lot. The proposal provides in-fill housing development that meets the standards of Title 49 and provides small lots for small homes, creating an opportunity for efficient and affordable construction of housing units.

   Finding: Yes. The proposed development maximizes economy and efficiency in utilities, housing construction, access, parking and circulation.

6. ***If the approval is for a phased development, is each phase consistent with the preliminary development plan and design of the entire alternative residential subdivision?***

   Analysis: The proposed ARS is not phased.

   Finding: Not applicable.

7. ***Does the proposed development adequately address the cumulative impacts of the phased development on the neighborhood and the natural environment?***

   Analysis: The proposed ARS is not phased.

   Finding: Not applicable.

8. ***If the approval includes an allotment of a density bonus, the density bonus complies with section 49.15.920(e)(4).***

   Analysis: A density bonus has not been requested.

   Finding: Not applicable.

Additionally, in accordance with CBJ 49.15.930 and CBJ 49.15.330 (e) & (f), the director makes the following findings on the proposed Alternative Residential Subdivision Preliminary Plan:

9. Is the application for the requested Alternative Residential Subdivision Preliminary Plan complete?

Analysis: No further analysis needed.

Finding: Yes. The application contains the information necessary to conduct full review of the proposed operations. The application submittal by the applicant, including the appropriate fees, substantially conforms to the requirements of CBJ Chapter 49.15.

10. Is the proposed use appropriate according to the Table of Permissible Uses?

Analysis: The application is for single-family dwellings. The use is listed at CBJ 49.25.300, Section 1.100 for the D18 zoning district.

Finding: Yes. The requested permit is appropriate according to the Table of Permissible Uses.

11. Will the proposed development comply with the other requirements of this chapter?

Analysis: The proposed site design complies with parking, vegetative cover, buffer, utility, and other requirements of Title 49.

Finding: Yes. With the recommended conditions, the proposed development will comply with Title 49, including parking, lighting, vegetative cover, and ARS design requirements.

12. Will the proposed development materially endanger the public health, safety, or welfare?

Analysis: No additional analysis required.

Finding: No. There is no evidence to suggest that with appropriate conditions, the requested ARS in a D18 zoning district, will materially endanger the public health or safety.

13. Will the proposed development substantially decrease the value of or be out of harmony with property in the neighboring area?

Analysis: No additional analysis required.

Finding: No. There is no evidence to suggest that with appropriate conditions, the requested ARS, in a D18 zoning district will substantially decrease the value or be out of harmony with the property in the neighboring area.

14. Will the proposed development be in general conformity with the land use plan, thoroughfare plan, or other officially adopted plans?

Analysis: The proposed ARS creates additional housing, plans and policies generally support housing development.

Finding: Yes. The proposed ARS, with the recommended conditions, will be in general conformity with the 2013 Comprehensive Plan, 2016 Housing Action Plan, and the 2015 Juneau Economic Development Plan.

RECOMMENDATION

Staff recommends the Planning Commission adopt the director's analysis and findings and **APPROVE** the preliminary plan for the Delta Drive Subdivision, an Alternative Residential Subdivision creating 14 unit-lots and one (1) parent lot. This permit would allow the applicant to submit for the final plan.

This approval is subject to the following conditions:

1. Prior to approval of the Final Alternative Residential Subdivision Plan, the applicant shall submit homeowners association, or similar, documents that comply with the requirements of 49.15.950(b);
2. Prior to the issuance of the first temporary certificate of occupancy for the development, access to and within the development shall be paved;
3. Prior to the issuance of the first temporary certificate of occupancy, each dwelling unit shall be connected to public sewer and water, and a master meter for water shall be installed by the developer; and
4. Per CBJ 49.15.920(o), the final mailbox location shall be reviewed and approved by the CDD Director, and installed prior to the issuance of the first temporary certificate of occupancy.

STAFF REPORT ATTACHMENTS

Item	Description
Attachment A	Application Packet
Attachment B	Preliminary Plan
Attachment C	Preliminary Construction Drawings
Attachment D	Water Memorandum
Attachment E	Preliminary Drainage Report
Attachment F	Zoning Map and Comprehensive Plan Land Use Designation Map
Attachment G	Abutters Notice and Public Notice Sign

CITY AND BOROUGH OF JUNEAU
ALASKA'S CAPITAL CITY
COMMUNITY DEVELOPMENT

DEVELOPMENT PERMIT APPLICATION

NOTE: Development Permit Application forms must accompany all other Community Development Department land use applications.

To be completed by Applicant

PROPERTY LOCATION

Physical Address
4090 Delta Drive, Juneau, AK 99801

Legal Description(s) (Subdivision, Survey, Block, Tract, Lot)
Thunder Mountain Park TR 1A

Parcel Number(s)
5B2401620011

☐ This property located in the downtown historic district
☐ This property located in a mapped hazard area, if so, which _____

LANDOWNER / LESSEE

Property Owner	Contact Person
Bicknell, Inc.	David Blommer

Mailing Address	Phone Number(s)
P.O. Box 33517	
E-mail Address: dblommer@bicknellinc.com	907-789-5727

LANDOWNER/ LESSEE CONSENT Required for Planning Permits, not needed on Building/ Engineering Permits

I am (we are) the owner(s)or lessee(s) of the property subject to this application and I (we) consent as follows:

A. This application for a land use or activity review for development on my (our) property is made with my complete understanding and permission.
B. I (we) grant permission for officials and employees of the City and Borough of Juneau to inspect my property as needed for purposes of this application.

X _____ Landowner/Lessee Signature — Date 10/8/20

X _____ Landowner/Lessee Signature — Date _____

NOTICE: The City and Borough of Juneau staff may need access to the subject property during regular business hours and will attempt to contact the landowner in addition to the formal consent given above. Further, members of the Planning Commission may visit the property before the scheduled public hearing date.

APPLICANT (if not same as owner, enter "SAME")

Applicant	Contact Person
SAME	SAME

Mailing Address	Phone Number(s)
SAME	
E-mail Address: SAME	

X _____ Applicant's Signature — Date of Application _____

----------DEPARTMENT USE ONLY BELOW THIS LINE----------

RECEIVED
OCT 12 2020
PERMIT CENTER/CDD

Intake Initials
LEC

This form and all documents associated with it are public record once submitted.

INCOMPLETE APPLICATIONS WILL NOT BE ACCEPTED

For assistance filling out this form, contact the Permit Center at 586-0770.

Case Number	Date Received
SMP20200004	10/12/20

CITY AND BOROUGH OF JUNEAU
ALASKA'S CAPITAL CITY
COMMUNITY DEVELOPMENT

SUBDIVISION AND DEVELOPMENT PLAN APPLICATION

See subdivision hand-outs for more information regarding the permitting process and the materials required for a complete application.

NOTE: Must be accompanied by a DEVELOPMENT PERMIT APPLICATION form.

To be completed by Applicant

PROJECT SUMMARY

An alternative residential subdivision (ARS) of Thunder Mountain Park TR 1A into Delta Drive Subdivision comprised of 15 unit lots and 1 parent lot.

Number of Existing Parcels 1 Total Land Area 1.82 acres Number of Resulting Parcels 16

HAS THE PARCEL BEEN CREATED BY A MINOR SUBDIVISION IN THE PRECEDING 24 MONTHS

○ NO ○ YES Case Number _____

TYPE OF SUBDIVISION OR PLATTING APPROVAL REQUESTED

MINOR DEVELOPMENT
(changing or creating 13 or fewer lots)

- ○ Preliminary Plat (MIP)
- ○ Final Plat (MIF)
- ○ Panhandle Subdivision
- ○ Accretion Survey
- ○ Boundary Adjustment
- ○ Lot Consolidation (SLC)
- ○ Bungalow Lot Subdivision
- ○ Common Wall/Zero Lot Subdivision
- ○ Other _____

MAJOR DEVELOPMENT
(changing or creating 14 or more lots)

- ⊗ Preliminary Plat (SMP)
- ○ Final Plat (SMF)
- ○ Preliminary Development Plan – PUD (PDP)
- ○ Final Development Plan – PUD (PDF)
- ○ Development Plan – ARS (ARP)
- ○ Development Plan – ARS (ARF)
- ○ Bungalow Lot Subdivision
- ○ Common Wall/Zero Lot Subdivision
- ○ Other _____

ALL REQUIRED DOCUMENTS ATTACHED

- ☑ **Pre-application conference notes**
- ☑ **Narrative including:**
  - ☑ Legal description(s) of property to be subdivided
  - ☑ Existing structures on the land
  - ☑ Zoning district
  - ☑ Density
  - ☑ Access
  - ☑ Current and proposed use of any structures
  - ☑ Utilities available
  - ☑ Unique characteristics of the land or structure(s)
- ☑ **Preliminary Plat checklist**

----------DEPARTMENT USE ONLY BELOW THIS LINE----------

SUBDIVISION/PLATTING FEES	Fees	Check No.	Receipt	Date
Application Fees	$ 1760.00			
Public Notice sign ~~Admin. of Guarantee~~	$ 150.00	Fee+Deposit		
Adjustment	$			
Total Fee	$ 1910.00			

Major Sub: $110 per lot x 16 lots

RECEIVED
OCT 12 2020
PERMIT CENTER/CDD

For assistance filling out this form, contact the Permit Center at 586-0770.

INCOMPLETE APPLICATIONS WILL NOT BE ACCEPTED

Case Number	Date Received
SMP20200004	10/12/20 LEC

PDC ENGINEERS

PLAN • DESIGN • CONSTRUCT

October 9, 2020

Laurel Christian, Planner II
City and Borough of Juneau
Community Development Department
155 S. Seward St.
Juneau, AK 99801

SUBJECT: Delta Drive Subdivision - Alternative Residential Subdivision
Project Narrative – PDC Project No. 20098JN

Dear Laurel;

On behalf of our client Bicknell Inc., PDC Engineers (PDC) is submitting this project narrative as part of the Delta Drive Subdivision Alternative Residential Subdivision (ARS) application. The property to be subdivided under the CBJ ARS code has a legal description of Thunder Mountain Park TR 1A with a land area of 79,189 square feet. Currently there are no dwelling structures on the property. Ten (10) existing concrete foundations exist on the property from where previous modular homes were located that have since been removed.

CBJ Zoning - The property is zoned D-18 Multifamily with an allowable density of 18 units per acre. The proposed use of the structures to be developed within the ARS will be residential and will meet the permissible uses as outlined for their zoning district and in the ARS code. The surrounding neighborhood is similarly zoned D-18 and is made up of single family and multi-family residences. The proposed development will be in harmony with the surrounding neighborhood.

Access - The existing parcel is accessed from the cul-de-sac at the end of Delta Drive, a CBJ owned and maintained paved roadway.

Utilities – CBJ public water and sanitary sewer utilities currently service the property. An existing 2-inch water line coming from the end of the existing 6-inch water line in Delta Drive supplies water to this property. Individual ¾" water services are located from the 2-inch line within the property serving the original 10 modular homes. A 6-inch PVC sanitary sewer line exists within the property acting as the sewer collector. This 6-inch sewer pipe connects to the CBJ sewer main located in the Delta Drive cul-de-sac. Individual 4-inch PVC sewer services coming from the building foundations connect to the 6-inch sewer. Under the CBJ Delta Drive Reconstruction project scheduled for construction in the Spring/Summer of 2021, new water and sanitary sewer utilities will be provided to the lot line of this property. An 8-inch PVC sewer service will be provided and an 8-inch HDPE water line. The Delta Drive Subdivision project will connect to these new services and extend into the subdivision. The existing sewer system has been found to be in good condition and will continue to be reused. Lots which previously did not have a 4-inch

Anchorage | Fairbanks | Juneau | Palmer | Soldotna
9109 Mendenhall Mall Road, Suite 4, Juneau, Alaska 99801
907.780.6060
www.PDCENG.com

RECEIVED
OCT 12 2020
PERMIT CENTER/CDD

sewer service will have a new ones installed. The subdivision has an existing 2" Poly water main serving the existing lots. PDC water system analysis (attached) indicates that the existing 2" water service can supply adequate flow and pressure to 7 dwelling units. There are two 2" Poly water line branches that will connect to the new 8" HDPE line. The existing 2" poly water line will be flushed, disinfected and pressure testing in compliance with CBJ Standards for domestic water supply. Existing ¾" water services will be used or new 1-inch Poly water services will be installed. A master water meter with vault structure will be installed prior to service lines.

Drainage – Surface storm water will be collected in drainage swales on the perimeter and interior lots of the property. The drainage system will involve construction of drainage swales, underground storm drain pipe and underdrain system to safely route the drainage to the existing Delta Drive drainage system which is planned for reconstruction in Spring/Summer 2021 by CBJ. As the designers for CBJ on the Delta Drive Reconstruction project, the storm drain improvements have been designed to accommodate the Delta Drive Subdivision storm drainage. There are two locations where storm drainage will discharge to Delta Drive, both of these locations have pipe sized at 12" diameter. Lots 11-15 will have a drainage swale near the rear of the property and then transition to an 8" underdrain in an existing 10' drainage easement that goes to a new culvert inlet being installed under the Delta Drive Reconstruction project. Lots 7-10 (new foundations) will be graded to drain to a drainage swale in the front of the lots where storm drainage will be collected and routed underground through a 12" drain pipe to the discharge location at the new culvert on Delta Drive. Lots 1-6 will have a perimeter drainage swale at the rear of the property that is graded to drain to the new culvert being installed under the CBJ Delta Drive Reconstruction project.

Parking and Circulation– Each lot will have two parking spaces as shown in the site plan. The existing gravel roadway will be reconstructed to accommodate a 20' wide paved access road through the property. This paved roadway will allow for safe and convenient emergency fire vehicle access throughout the subdivision.

Buffer/Setback – A perimeter buffer has been shown on the site plan with a new wooden fence located at the property line for screening and privacy. Buffers match the required setbacks for this zoning district.

Vegetative Cover – The parent lot has roughly 46% vegetative cover.

Lighting – Lighting will be installed on the individual structures.

Mailbox, Garbage and Snow Storage – CBJ Standard Mailboxes have been shown on Lot 1 to allow for each lot to have US Postal mail delivery. Two garbage dumpsters have been shown on Lot 1 to allow for refuse to be placed from each lot. Snow storage has been shown on Lot 1.

Should you have any questions or require any additional information, please do not hesitate to contact me at your convenience.

Sincerely,

J. Mark Pusich

J. Mark Pusich, PE
Principal | Civil/Structural Engineer
PDC Engineers

Attachments: ARS Application: CBJ Development Application, ARS Subdivision Preliminary Plat, Lot Closure Comps, Subdivision Application, Preliminary Plat Checklist, Pre-App meeting minutes, Construction Improvement Drawings

CITY AND BOROUGH OF JUNEAU
ALASKA'S CAPITAL CITY
COMMUNITY DEVELOPMENT

(907) 586-0715
CDD_Admin@juneau.org
www.juneau.org/CDD
155 S. Seward Street • Juneau, AK 99801

Delta Drive Alternative Residential Subdivision

Case Number: PAC20200026
Applicant: Spike Bicknell & David Blommer

Property Owner: Delta Park LLC

Property Address: 4090 Delta Drive

Parcel Code Number: 5B2401620011

Site Size: 79,189 Square Feet

Zoning: D-18

Existing Land Use: Manufactured Homes

Conference Date:	4/29/20
Report Issued:	**05/06/20**
List of Attendees	

Note: Copies of the Pre-Application Conference Report will be emailed, instead of mailed, to participants who have provided their email address below.

Name	Title	Email address
David Blommer	Applicant	dblommer@bicknellinc.com
Laurel Christian	Planning	Laurel.christian@juneau.org
Kyle Paw	Permit staff	Kyle.paw@juneau.org
Autumn Sapp	General Engineering	Autumn.Sapp@juneau.org
Mark Pusich	PDC	MarkPusich@pdceng.com

Conference Summary

Questions/issues/agreements identified at the conference that weren't identified in the attached reports. The following is a list of issues, comments and proposed actions, and requested technical submittal items that were discussed at the pre-application conference.

The Alternative Residential Subdivision (ARS) requires a two-step approval process. The ARS preliminary plan is reviewed the and then then ARS final plan is reviewed. A major subdivision application is also required. The applicant may apply for the preliminary ARS plan and preliminary major subdivision plat at the same time.

The preliminary ARS plan is reviewed through the conditional use permit process with additional requirements found in the ARS section of code. The major subdivision plat is reviewed for platting requirements. The ARS section of code is attached to this report, approval criteria are highlighted.

Planning Division

1. **Zoning** – D18 Zoning District. There is no minimum lot size for the unit lots, however; you should demonstrate on the plan their size, and show how large the parent parcel is. CBJ 49.80 Definitions for Parent Lot and Unit Lot:

   Parent lot means the original lot and the residual area from which unit-lots are created through an alternative residential subdivision.

   Unit-lot means any lot, site, parcel, unit-site, and similar geographically defined property that is created through an alternative residential subdivision and that is substantially smaller than the minimum lot size required for the zoning district

2. **Setback/buffer** – There are no setbacks for the unit lots. A perimeter buffer is required in lieu of the setback requirements of this title on the parent lot. The buffer shall not be less than the setbacks required for the zoning district. Setbacks for the D18 zoning district are: Front: 20'; Rear: 10'; Side: 5'; Street side:13'

   a. The commission may enlarge the required buffer to up to 25 feet.

   b. The buffer shall be vegetated unless the commission requires non-vegetated screening. A buffer may include fencing, natural berm, or other similar features.

   c. No parking areas, dwelling units, unit-lots, or permissible uses may be located within the perimeter buffer. Access to the development may cross a portion of the buffer.

3. **Height** – 35' primary uses; 25' accessory uses

4. **Parking & Circulation** – Each single-family dwelling requires 2 parking spaces. Residential parking lots with more than 10 parking spaces but fewer than 25 parking spaces require 1 ADA van accessible parking space.

   a. Parking can be either on the unit lots or on the parent lot. On the ARS plan, parking areas should be shown.

5. **Access** – Access to the ARS must be publically maintained (Delta Drive is a publically maintained right-of-way). Access within the ARS must be located completely on the parent lot, be paved, and meet emergency service access requirements.

6. **Lot Coverage** – There is no maximum lot coverage for the unit lots, maximum lot coverage applies to the parent lot. The maximum lot coverage is 50%.
7. **Vegetative Coverage** – There is a minimum vegetative cover requirement for the parent lot. In the D18 zoning district, 30% vegetative cover is required.
    a. Shared open space is not required for an ARS in the D18 zoning district.
8. **Density** – Site measures 79,189 square feet (1.8 acres). At 18 units per acre, the site could accommodate up to 32 dwelling units.
    a. **Density bonuses** – The commission may award a density bonus to an ARS for enhancements to the development. For the D18 zoning district, the total bonus shall not exceed 25%. Applicant should state in the project narrative if they are requesting density bonuses and how they meet the enhancement criteria.
9. **Lighting** – In the project narrative, the applicant should discuss if lighting will be installed.
10. **Noise** – Noise is not expected to be out of character with the D18 residential zoning district.
11. **Flood** – NA
12. **Hazard/Mass Wasting/Avalanche/Hillside Endorsement** – No Known
13. **Wetlands** – No Known
14. **Habitat** – (Eagle – remind applicant to check with Feds; Riparian, etc.) – No Known
15. **Plat or Covenant Restrictions** – No known
16. **Traffic** – Per CBJ 49.40.300 a traffic impact analysis is required for projects that are anticipated to generate more than 500 average daily trips (ADTs). A single-family dwelling generates 9.52 ADTs. The proposal of 14 lots for single-family dwellings would generate 133.28 ADTs. A TIA will not likely be required for this project.
17. **Homeowners Association** – The ARS requires that a HOA be formed. The HOA documents must be recorded with the final plat.

Building Division

18. **Building** - plans will be addressed in plan review
19. **Outstanding Permits** -

	Permit Application	Pstatus	Permit Type	Location	Permit Id	Purpose
1	BLD20130336	Issued	BMH	4090 DELTA DR	2000993	Place 10 manufactured homes on existing foundations

General Engineering/Public Works

20. **Engineering** –
    a. **Easements:** Site plan shall include all easements for drainage, utility lines including plumbing lines, access, snow storage, trash (dumpster) storage, or any other shared use that requires crossing the property line.
    b. **Agreements:** A maintenance and hold harmless (of CBJ) agreement will need to be drafted, signed, and recorded for all shared infrastructure for the development, e.g. driveway, water, sewer, etc.

21. **Drainage** – Submit a drainage plan indicating how drainage from the proposed subdivision will join an established drainage channel or channels. Easements must be provided on the plat for all established drainage ways or any proposed drainage ways that cross any current or future abutting property lines.

22. **Utilities** – (water, power, sewer, etc.) A master water meter shall be installed by the developer prior to any branches or services. The meter must be in an above ground heated space. Water and sewer sizing shall be determined by an Alaskan licensed civil or mechanical engineer.

    Beyond the shared private main and master water meter, a minimum of 1" water service and 4" sewer service will need to be installed to the front property line of each newly created lot prior to the recording of the final plat. At the time of preliminary plat submittal, please submit a construction plan with for the new utilities. The plan needs to include pipe locations, sizing, and grades for sewer to indicate appropriate fall will be achieved. Existing water services not being utilized shall be decommissioned and removed back to the mainline. If utilizing existing services or branches please show their location, size, and material type on the plan.

    If a new private water and/or sewer mains are to be installed within the ROW, the following permits will need to be obtained to provide utilities to the newly created lot:

    a. **CBJ right-of-way (ROW) permit**- Once the construction plan for the utilities is approved, CBJ will create the ROW permit. The permit will allow the tapping of the water and sewer mains, water and sewer service installation, and road restoration within the right-of-way. Inspection fees, refundable bond amount, and conditions will be determined after review of the proposed construction plan. The extension of the utilities within the property will require further permitting and fee assessments. This process is done separately from the subdivision and typically in conjunction with the building permit application.

    b. **CBJ Water and Sewer Utility permits** – The installation of the private water and sewer main lines, services, and the water meter within the private property will be covered by these utility permits.

Fire Marshal

23. **Fire Items/Access** –

List of required applications

Based upon the information submitted for pre-application review, the following list of applications must be submitted in order for the project to receive a thorough and speedy review.

1. ARS Preliminary Plan Approval Application
2. Major Subdivision Application (Required when the subdivision plat is submitted)
3. Development Permit Application

Additional Submittal Requirements

Submittal of additional information, given the specifics of the development proposal and site, are listed below. These items will be required in order for the application to be determined Counter Complete.

1. A copy of this pre-application conference report.

2. Preliminary Plat Checklist (Required when the subdivision plat is submitted)
3. Please see 49.15.940(b) for a description of the Required submissions with an ARS Preliminary Plan Approval:
    a. Ownership
    b. Preliminary Development Plan
    c. Design
    d. Open space, common facilities, and general landscaping
    e. Request for density bonuses (if applicable)
    f. Description of phased development (if applicable)
4. As built survey of existing foundations if you plan to utilize them.

Fee Estimates

The preliminary plan review fees listed below can be found in the CBJ code section 49.85.

Based upon the project plan submitted for pre-application review, staff has attempted to provide an accurate estimate for the permits and permit fees which will be triggered by your proposal.

1. ARS Review Fee
    a. Preliminary Plan – $400.00 plus $80.00 per residential unit
    b. Final Plan - $300.00 plus $60.00 per residential unit
    c. Public notice sign fee $50 plus $100 refundable deposit
2. Major Subdivision Review Fee
    a. Preliminary Plat - $110 per lot
    b. Final Plat - $70 per lot
    c. Public notice sign fee $50 plus $100 refundable deposit
3. ROW Permit (work within the ROW):
    a. $10 permit fee
    b. Inspection fees - $60 per inspection trip or hour, will be determined at time of construction plan review
    c. Refundable bond – will be determined at time of construction plan review. Can be paid in the form of cash, check, surety, or conveyance.
    d. Bond fee – dependent on type of bond payment.
1. Water Utility Permit (work within private property):
    a. Water Connection charge – based on the line size at the location of the water meter as determined by an Alaskan licensed civil engineer.
2. Sewer Utility Permit (work within private property):
    a. Sewer Connection charge – based on the number of drainage fixture units and shall be supplied in the civil construction plans as determined by an Alaskan licensed civil engineer.

b. $60.00 per inspection or trip, will be determined at time of construction plan review.

For informational handouts with submittal requirements for development applications, please visit our website at www.juneau.org/cdd.

Submit your Completed Application
You must submit your application(s) in person with payment made to:

City & Borough of Juneau, Permit Center
230 South Franklin Street
Fourth Floor Marine View Center
Juneau, AK 99801

Phone: (907) 586-0715
Fax: (907) 586-4529
Web: www.juneau.org/cdd

PRELIMINARY PLAT CHECK LIST

Name of Proposed Subdivision: Delta Drive Subdivision

The following items must be included with the initial submittal of a Preliminary Plat:

- ☒ Application, filled out completely
- ☐ Application fee (see fee schedule)
- ☒ Project Narrative
- ☐ Five (5) – 24" by 36" Copies
- ☒ Pre-application Conference Report
- ☒ Lot Closure Report
- ☒ Disclosure of all known environmental hazards and any proposed mitigation measures recommended in the applicable environmental document.
- ☐ Preliminary Plat Checklist: I have reviewed the checklist and all submittals for completeness and accuracy.

_____ _____

Applicant or Surveyor - Signature Date

_____

Applicant or Surveyor - Print Name

GENERAL REQUIREMENTS

- ☐ The preliminary plat shall be prepared by a professional land surveyor, registered in the State of Alaska
- ☐ The preliminary plat shall be submitted on 22 by 34 inch sheets. The director of engineering and public works may approve alternate sheet sizes
- ☐ The preliminary plat shall be drawn with black ink to a scale of one-inch to 100 feet or less, or other suitable scale approved by the director of engineering and public works
- ☐ The preliminary plat shall be oriented with north toward the top of the sheet.
- ☐ A vicinity map shall be located in the upper right-hand corner of the sheet
- ☐ The vicinity map shall be oriented in the same direction as the plat
- ☐ A suitable north arrow shall be shown for the plat and vicinity map
- ☐ All line work and lettering must be of professional quality, and all line widths and lettering sizes must be of such size that all information can be clearly shown without overlap or confusion

GRAPHIC REQUIREMENTS - A preliminary plat shall contain the following information:

Title block - An enclosed title block in the lower right-hand corner containing the following information:

- ☐ The proposed name of the subdivision
- ☐ The legal description of the parcel to be subdivided including U.S. Survey, U.S. Mineral Survey, A.T.S. number or section, township, and range number, as applicable
- ☐ "City and Borough of Juneau, Alaska"
- ☐ "State Recorder's Office at Juneau"
- ☐ The date the preliminary plat was prepared and revised
- ☐ The horizontal scale
- ☐ The name and address of the owner of record
- ☐ The name, address, and telephone number of the surveyor preparing the preliminary plat

Preliminary Plat Checklist
Updated 1/2018
Page 2 of 5

Lot, block, and street information:

- ☑ The area of each lot
- ☑ The dimensions in feet and hundredths of a foot
- ☑ An identifying number and letter for lots and blocks
- ☑ Lots numbered consecutively, commencing with the number "1," with no omissions or duplications
- ☑ If the remainder of an original parcel being subdivided is relatively large, it shall be designated as a "tract" with an identifying number
- ☑ All parcels of land intended to be dedicated for public use or reserved for the use of all of the property owners in the proposed subdivision shall be shown as lots, and consecutively numbered. The purpose and any conditions or limitations on the use of the parcel shall be noted on the plat
- ☑ Abutting properties shall be shown with dashed lines, numbers, and/or letters
- ☑ For resubdivisions or public way vacations, the lines and legal description of the previous lots shall be shown with light dashed lines, numbers, and/or letters, or by a separate plat on the same sheet showing the previous lot lines
- ☑ The minimum data shown for each curve shall be as follows:
  - ☑ Length
  - ☑ Central angle
  - ☑ Radius
  - ☑ Bearing and distance of long chord
- ☐ Setbacks shall be shown on all corner lots and any lots with multiple frontage. Setbacks shall be shown on typical lots

Boundary lines:

- ☑ All boundary lines of the subdivision with bearings and distances described
- ☑ All retraced boundary lines shall show record and measured bearings and distances where they differ. Record dimension information shall be shown within parentheses and include a record source identification
- ☑ The exterior boundary lines of the subdivision shall be a solid black opaque line that is of a width that distinguishes it from all other property lines shown on the plat
- ☐ If phasing is proposed, then the boundaries and number of each phase, sequential lot numbering, and a subdivision name consistent with previous phases shall be shown

Monumentation:

- ☑ The monuments used to establish the basis of bearing
- ☑ Each monument found or set shall be identified on the plat by a symbol
- ☑ A complete description of the monument, including type and all information printed on the cap. A typical drawing shall be shown for each type of monument cap set
- ☑ A legend showing the symbols for all the types of monuments
- ☑ The identification, description location, elevation, and datum of the benchmark used to establish vertical control

Site access, circulation, and utilities:

- ☑ The widths and names of existing rights-of-way within the subdivision and within 100 feet of the subdivision boundary
- ☐ Proposed rights-of-way, including their widths and proposed names
- ☐ The grades of existing and proposed streets within these rights-of-way
- ☐ The width, ownership, use, and record reference of all proposed and existing easements within the subdivision and within 100 feet of the subdivision boundary
- ☐ The width, ownership, and use of all proposed easements

- ☒ All proposed and existing easements shall have sufficient dimensions shown to determine their location on the ground
- ☐ Existing trails or pathways within the subdivision and within 100 feet of the subdivision boundary, including the width of any associated rights-of way or easements
- ☐ Proposed trails or pathways and widths of their rights-of-way
- ☐ If the plat submitted covers only a part of the tract under the control of the applicant, a sketch plat of the prospective street system of the unplatted part shall be submitted
- ☒ The location of any existing or proposed driveways/curb cuts that access or are proposed to access any existing or proposed street

Topographic information:

- ☒ For slopes of less than five percent, show one foot contour lines and include spot elevations at all breaks in grade, along all drainage channels or swales, and at selected points not more than 100 feet apart in all directions
- ☐ For slopes between five percent and ten percent, show two foot contour lines
- ☐ For slopes greater than ten percent, show five foot contour lines
- ☒ Every fifth elevation contour shall be distinctive and clearly labeled
- ☒ Dashed lines shall represent existing contours
- ☒ Mapping shall include any significant features which can materially affect the design of the subdivision, including, but not limited to, structures, fences, walls, and utility poles
- ☒ If irregular slopes or special features are present, additional contour information may be required by the director of engineering and public works for planning or construction purposes. Additional required information may include projecting the topography of the site after grading has taken place, showing such items as:
  - ☐ Pad elevations and drainage patterns for each lot
  - ☐ Tops and toes of all manufactured slopes, including daylight lines
  - ☐ Existing and proposed retaining wall locations and heights
- ☐ For subdivisions located in hillside areas with slopes greater than eighteen percent, additional requirements apply in accordance with CBJ 49.70, Article II

Sewer and water:

- ☑ Existing sewer and water mains within the tract with pipe sizes and grades
- ☑ A draft plan for proposed water and sewer lines showing the size, approximate slope, and connection points with elevations for the purpose of determining the feasibility of construction

Multisheet plats:

- ☐ When a plat requires more than one sheet, exclusive of a certificate sheet, an index sheet shall be included. When a plat requires more than three sheets, a cover sheet shall also be included, showing the subdivision title, a key map, and all certificates. Each additional sheet shall include the following data:
  - ☐ North arrow
  - ☐ Legend
  - ☐ Surveyor's seal and signature
  - ☐ Title block
  - ☐ Sheet _____ of _____
  - ☐ Scale
  - ☐ All plat notes
  - ☐ Vicinity map

N/A

ADDITIONAL MAPPING OR REPORTS- *At the pre-application meeting, it will be determined if any of the following additional mapping or reports are required to be submitted with the preliminary plat. If required, the following additional mapping or reports shall be submitted:*

Hazard and Special Habitat Areas:

- ☐ Any portion of a special flood hazard area, landslide or avalanche area, habitat area as defined by CBJ 49.70.310, or watersheds, either existing at the proposed subdivision site or shown on the overlay maps, adopted pursuant to this title, to exist at the proposed subdivision site, must be depicted on the preliminary plat
- ☐ The boundaries of any wetland areas must be depicted on the preliminary plat. Boundaries must be determined by a person qualified to perform wetland delineations N/A

Soils report:

- ☐ A soils report prepared by an engineer licensed by the State of Alaska shall be required if the proposed subdivision is located farther from the existing public sewer system than specified in CBJ 49.35, and the applicant chooses to provide on-lot waste disposal rather than to connect to the public system. A soils report shall include the following:
  - ☐ Certification that the proposed lots are large enough and have soil of sufficient permeability to permit the construction of approved waste treatment systems for on-lot waste disposal
  - N/A ☐ The location and size of drain fields for each lot
  - ☐ The locations and logs of test borings, percolation test results, and a hydrological evaluation of on-site sewage disposal
  - ☐ If the soils report indicates that the soils found on the site are not of sufficient permeability or the lots are not large enough to permit the construction of systems for on-lot waste disposal, the size of the proposed lots must be increased or alternate methods for waste disposal proposed
  - ☐ The soils report shall describe the nature of the subsurface soils and any soil conditions that would affect the design of the proposed development. The soils report shall state whether the proposed subdivision plan is feasible and provide general solutions for all known geotechnical conditions or problems

Drainage report:

- ☐ A preliminary report specifying the method by which the applicant proposes to manage surface and subsurface drainage for the subdivision and the effect of such method on adjacent areas. Unlike the drainage plan required by CBJ 49.35.510, the preliminary drainage report does not need to be prepared by a licensed engineer. The report must address the following:
  - ☐ A calculation of the increase in stormwater runoff resulting from the proposed development as well as the runoff from all drainage areas associated with the site. Runoff calculations shall be based on a fully-developed subdivision and a 25-year storm event
  - ☐ How drainage from the proposed subdivision will join an established drainage channel or channels, unless the director of engineering and public works approves use of an alternative drainage way
  - ☐ An evaluation of existing drainage ways and structures located between the subdivision and the receiving water body, and verification that the existing drainage ways can accommodate the increased runoff. If the increased runoff cannot be handled, the plan must propose solutions to the problem
  - ☐ All required improvements, on or off site, that are shown on the construction plans in accordance with CBJ 49.35, Article V, and that will be constructed as part of the subdivision

Water:

- ☐ For subdivisions of five or more lots, including major subdivisions, the following shall be included, where applicable, in accordance with CBJ 49.15.412:
  - ☐ If a proposed subdivision is located at greater distance from the existing public water system than specified in CBJ 49.35, Article III, and the applicant chooses not to connect to the public system, a statement that the applicant will provide a community water system or that individual wells will be used

- ☐ A report by a registered engineer or geologist that clearly supports the legal and physical availability of adequate water. Methods for proof of water availability and the standards for quantity are listed in CBJ 49.35, Article III
- ☐ A copy of the State application for a permit to appropriate water in the quantity required to meet the subdivisions demands

☐ This does not apply to remote subdivisions unless: the subdivider of the remote subdivision chooses to provide potable water, a public water system is available and the subdivision falls within the criteria outlined in CBJ 49.35.310(a), or the subdivision has four or fewer lots.

☐ The director for minor subdivisions, and the planning commission for major subdivisions, may, for good cause, temporarily waive the requirement to provide a water report and proof of water, and condition the approval of the preliminary plat upon the provision of both documents as part of the final plat application and approval process.

Erosion control:

☐ A report explaining the method by which the applicant proposes to control erosion and manage runoff, and potential impacts to adjacent properties or water bodies. The report shall include a plan for preservation of ground cover in areas where runoff and resulting erosion need to be minimized.

Traffic study:

☐ A traffic impact analysis may be required with the preliminary plat in accordance with CBJ 49.40.300.

Shadow plats:

N/A ☐ For subdivisions of five or more lots in transition areas, a shadow plat shall be submitted according to CBJ 49.70.710. The shadow plat shall consist of a sketch superimposed on the proposed subdivision layout. This sketch shall reflect any future resubdivision of the parcels into smaller lots consistent with the higher density and the lot size allowed under the transition zoning.

GENERAL NOTES

1. ALL BEARINGS SHOWN ARE TRUE BEARINGS AS ORIENTED TO THE BASIS OF BEARING AND DISTANCES SHOWN ARE REDUCED TO HORIZONTAL FIELD DISTANCES.
2. THE ERROR OF CLOSURE OF THIS SURVEY DOES NOT EXCEED 1:10,000.
3. BASIS OF BEARING
   THE BASIS OF BEARING FOR THIS PLAT IS THE BEARING OF S 0° 01' 00" W, AS SHOWN ON PLAT No. 73-17, DATED OCTOBER 29, 1973, BETWEEN THE RECOVERED MONUMENTS, AS SHOWN ON THIS PLAT.
4. WHERE RECORD SURVEY COURSES (BEARINGS AND/OR DISTANCES) DIFFER FROM THAT OF ACTUAL FIELD MEASURED AND/OR COMPUTED SURVEY COURSES, THE RECORD BEARING AND/OR DISTANCES IS SHOWN WITHIN PARENTHESIS AND REFERENCED TO A RECORDED PLAT (R#).
5. THE PRELIMINARY FIELD SURVEYING WAS PERFORMED ON MAY 26-27, 2020, UTILIZING A TRIMBLE S7 ROBOTICS TOTAL STATION WITH STANDARD LASER RANGING MEASUREMENTS.
6. RECORD INFORMATION
   THE RECORD INFORMATION USED FOR THIS SUBDIVISION IS DERIVED FROM THE OFFICIAL PLATS: PLAT No. 73-17, JUNEAU RECORDING DISTRICT, DATED OCTOBER 29, 1973 (R1), PLAT No. 92-18, JUNEAU RECORDING DISTRICT, DATED APRIL 28,1992 (R2);
7. ALL DISTANCES ARE MEASURED IN U.S. SURVEY FEET, AND HAVE BEEN REDUCED TO THEIR HORIZONTAL EQUIVALENTS.
8. DOMESTIC WATER AND SANITARY SEWER DISPOSAL PROVIDED BY THE CITY AND BOROUGH OF JUNEAU PUBLIC UTILITIES.
9. THE LOTS CREATED THROUGH THIS SUBDIVISION ARE AN ALTERNATIVE RESIDENTIAL SUBDIVISION. AT TIME OF PLAT RECORDING DEVELOPMENT OF LOTS, INCLUDING FURTHER SUBDIVISION OR USE, IS SUBJECT TO CBJ 49.15 ARTICLE IX. SEE CITY AND BOROUGH OF JUNEAU LAND USE CODE FOR CURRENT REGULATIONS.
10. THERE SHALL BE NO DISTURBANCE OR DEVELOPMENT WITHIN THE PERIMETER BUFFER SHOWN ON THIS PLAT, AS REQUIRED BY CBJ 49.15.920(j).
11. AT TIME OF RECORDING, LOTS 2 THROUGH 11 AND 13 THROUGH 15 ARE LIMITED TO ONE SINGLE FAMILY DWELLING. LOT 12 MAY BE PERMITTED ONE SINGLE FAMILY DWELLING AND ONE ACCESSORY APARTMENT. SEE CBJ 49.15 ARTICLE IX FOR CURRENT REGULATIONS.

EASEMENT NOTE

A BLANKET EASEMENT ACROSS LOT 1 FOR UTILITIES, DRAINAGE AND DRIVEWAY ACCESS IS DEDICATED BY THIS PLAT.

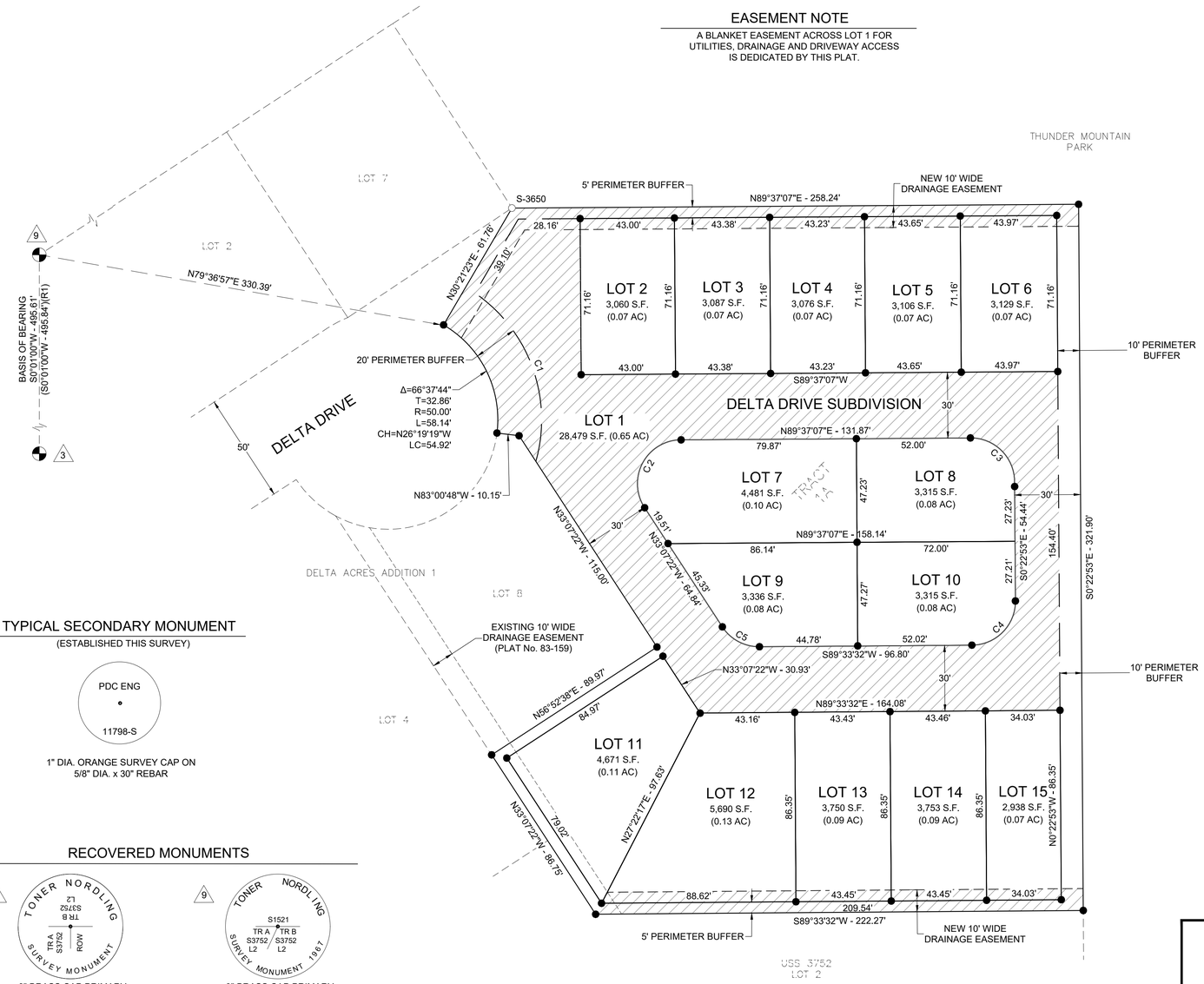

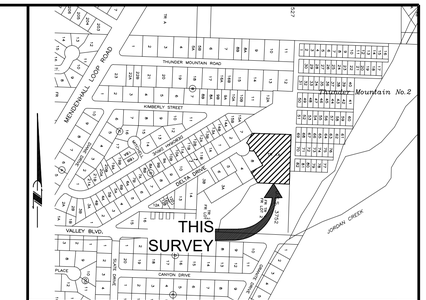

VICINITY MAP

SOURCE: CBJ PROPERTY ATLAS

SCALE: 1"= 500'

LEGEND

- PRIMARY MONUMENT (RECOVERED)
- SECONDARY MONUMENT (RECOVERED)
- SECONDARY MONUMENT (ESTABLISHED)
- SURVEYED LINE
- UNSURVEYED LINE
- EASEMENT LINE
- NEW EASEMENT LINE
- (R1) PLAT No. 73-17, JRD
- (R2) PLAT No. 92-18, JRD
- ACCESS, UTILITY & DRAINAGE EASEMENT
- PERIMETER BUFFER

OWNERSHIP CERTIFICATE

BICKNELL, INC. HEREBY CERTIFIES THAT BICKNELL, INC. IS THE OWNER OF THE PROPERTY SHOWN AND DESCRIBED HEREON AND THAT IT HEREBY ADOPTS THIS PLAT OF SUBDIVISION WITH ITS FREE CONSENT, AND DEDICATE ALL STREETS, ALLEYS, WALKS, PARKS AND OTHER OPEN SPACES TO PUBLIC OR PRIVATE USE AS NOTED:

OWNER _____ DATE: _____ 2020
ROSCOE V. BICKNELL, IV
BICKNELL, INC.

NOTARY ACKNOWLEDGMENT

UNITED STATES OF AMERICA)
) SS
STATE OF ALASKA)

THIS IS TO CERTIFY THAT ON THIS_____ DAY OF _____, 2020, BEFORE ME, THE UNDERSIGNED A NOTARY PUBLIC IN AND FOR THE STATE OF ALASKA, DULY COMMISSIONED AND SWORN, PERSONALLY APPEARED _____TO ME KNOWN TO BE THE PERSONS DESCRIBED IN AND WHO EXECUTED THE ABOVE AND FOREGOING INSTRUMENT, AND ACKNOWLEDGED TO ME THAT THEY SIGNED AND SEALED THE SAME FREELY AND VOLUNTARILY FOR THE USES AND PURPOSES THEREIN MENTIONED.
WITNESS MY HAND AND OFFICIAL SEAL THE DAY AND YEAR IN THIS CERTIFICATE FIRST ABOVE WRITTEN.

_____
NOTARY PUBLIC FOR ALASKA

MY COMMISSION EXPIRES: _____

PLANNING COMMISSION PLAT APPROVAL

I HEREBY CERTIFY THAT THE SUBDIVISION PLAT SHOWN HEREON HAS BEEN FOUND TO COMPLY WITH THE SUBDIVISION REGULATIONS OF THE CITY AND BOROUGH OF JUNEAU, ALASKA AND THAT SAID PLAT HAS BEEN APPROVED BY THE PLANNING COMMISSION BY PLAT RESOLUTION NO. _____, DATED _____, 2020 , AND THAT THE PLAT SHOWN HEREON HAS BEEN APPROVED FOR RECORDING IN THE JUNEAU RECORDING DISTRICT, STATE RECORDERS OFFICE AT ANCHORAGE.

_____
CHAIRMAN OF THE PLANNING COMMISSION
CITY AND BOROUGH OF JUNEAU

DATED _____, 2020

ATTEST:

_____
MUNICIPAL CLERK
CITY AND BOROUGH OF JUNEAU

TYPICAL SECONDARY MONUMENT

(ESTABLISHED THIS SURVEY)

1" DIA. ORANGE SURVEY CAP ON 5/8" DIA. x 30" REBAR

RECOVERED MONUMENTS

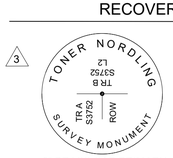

3" BRASS CAP PRIMARY
GOOD CONDITION
1.5' BELOW GRADE

3" BRASS CAP PRIMARY
GOOD CONDITION
FLUSH WITH GRADE

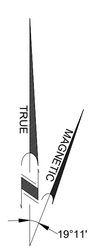

SOURCE: N.O.A.A.
MAGNETIC DECLINATION 19°11'E
NOVEMBER 14, 2017 CHANGING BY
0°17' W/YEAR

CURVE TABLE					
CURVE #	LENGTH	DELTA	RADIUS	CHORD BEARING	CORD DISTANCE
C1	87.15'	71° 20' 01"	70.00'	N19° 52' 32"W	81.63'
C2	42.84'	122° 44' 29"	20.00'	S28° 14' 53"W	35.11'
C3	31.42'	90° 00' 00"	20.00'	N45° 22' 53"W	28.28'
C4	31.40'	89° 56' 25"	20.00'	N44° 35' 20"E	28.27'
C5	20.01'	57° 19' 06"	20.00'	S61° 46' 55"E	19.18'

30' 0 15' 30' 60'
SCALE: 1"=30'

SURVEYOR'S CERTIFICATE

I, CRAIG O. RANSON, IN MY CAPACITY AS A PROFESSIONAL LAND SURVEYOR REGISTERED IN THE STATE OF ALASKA, CERTIFY THAT THIS PLAT REPRESENTS THE SURVEY MADE BY ME OR UNDER MY DIRECT SUPERVISION, THAT THE ACCURACY OF THE SURVEY IS WITHIN THE LIMITS REQUIRED BY TITLE 49 OF THE CODE OF THE CITY AND BOROUGH OF JUNEAU, THAT ALL DIMENSIONS AND RELATIVE BEARINGS ARE CORRECT AND THAT MONUMENTS ARE SET IN PLACE AND NOTED UPON THIS PLAT AS PRESENTED.

DATE: 12/04/20

PDC ENGINEERS
PLAN • DESIGN • CONSTRUCT
A RESPEC COMPANY
9109 Mendenhall Mall Rd. Ste. 4, Juneau, AK 99801
907.780.6060 | AECC605

A PLAT OF
DELTA DRIVE SUBDIVISION
A SUBDIVISION OF
THUNDER MOUNTAIN PARK TRACT 1A
WITHIN U.S. SURVEY NO. 3752
WITHIN CITY AND BOROUGH OF JUNEAU, ALASKA
JUNEAU RECORDING DISTRICT

STATE RECORDER'S OFFICE AT ANCHORAGE

OWNER:
BICKNELL, INC.
P.O. BOX 33517
JUNEAU, AK 99803

SURVEYOR:
PDC ENGINEERS
9109 MENDENHALL MALL ROAD SUITE 4
JUNEAU, ALASKA 99801
(907) 780-6060

DATE: December 04,2020 SCALE: 1"=30' SHEET 1 OF 1 PDC PROJ. No. 20098JN

SMP20200004/ARP20200001

P:\2020\20098JN-Bicknell_Delta\LV100\Plat\20098JN_PLAT Dec 04, 2020 - 10:05 AM

DELTA DRIVE SUBDIVISION CONSTRUCTION IMPROVEMENT PLAN

JUNEAU, ALASKA

SHEET INDEX

SHEET No.	DESCRIPTION
C001	COVER SHEET
C002	GENERAL NOTES, ABBREVIATIONS AND SYMBOLS
C003	SUMMARY TABLES
C004	EXISTING SITE CONDITIONS
C100	TYPICAL SECTIONS
C101	CONSTRUCTION DETAILS
C102	CONSTRUCTION DETAILS
C200	OVERALL SITE PLAN
C201	SITE & UTILITY PLAN
C202	SITE & UTILITY PLAN
C203	GRADING PLAN
C204	WATER METER ENCLOSURE DETAILS
C205	WATER METER ENCLOSURE DETAILS
C206	WATER METER ENCLOSURE DETAILS
C207	WATER METER ENCLOSURE DETAILS
C300	EROSION & SEDIMENT CONTROL PLAN
C301	EROSION & SEDIMENT CONTROL DETAILS

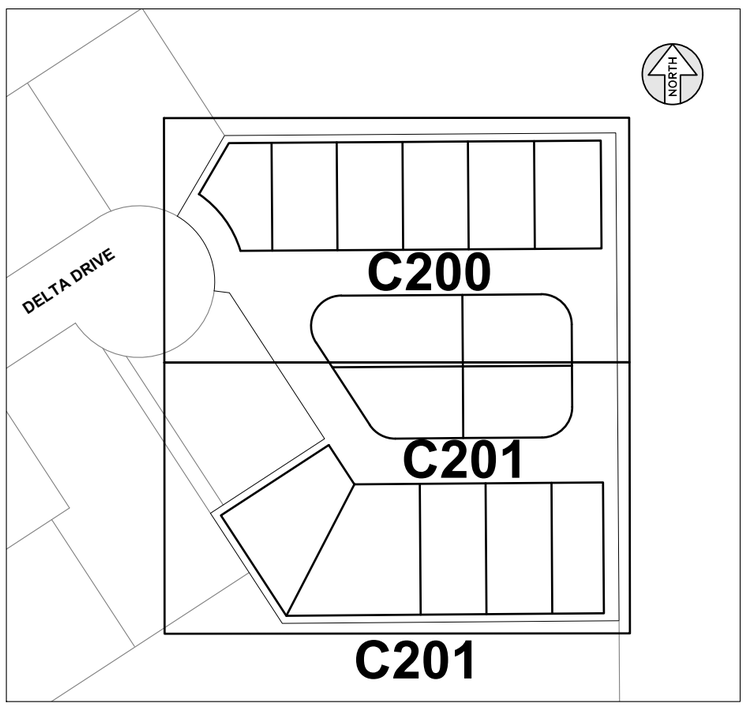

SHEET KEY MAP

N.T.S.

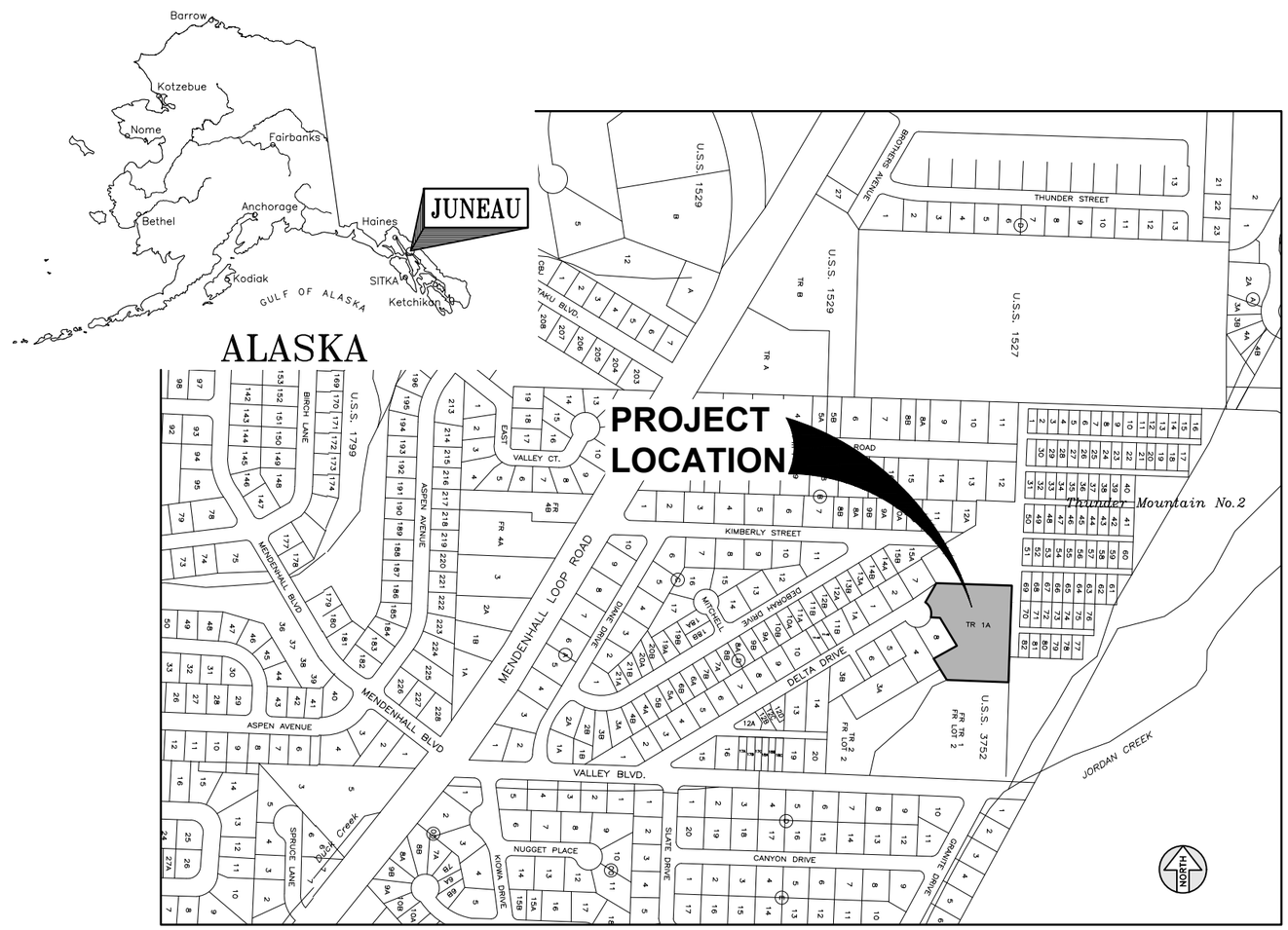

PROJECT LOCATION MAP

500' 0 250' 500' 1000'

SCALE: 1"=500'

DESIGN	MSM
DRAWN	MSM
CHECK	JMP
APPROVED	JMP
FILE:	

No.	DATE	REVISION	BY	APRVD.

DELTA DRIVE SUBDIVISION

JUNEAU, AK

BICKNELL INC. QUALITY CONSTRUCTION

STATE OF ALASKA 49TH Joseph M. Pusich CE 8152 REGISTERED PROFESSIONAL ENGINEER 12/03/20

PDC ENGINEERS
PLAN • DESIGN • CONSTRUCT
A BESEC COMPANY
Professional Members of American Council of Engineering Companies
907.780.6060 | AECC605

COVER SHEET

DATE: Dec 03, 2020
PDC No. 20098JN

SHEET
C001

P:\2020\20098JN-Bicknell_Delta\C\C0001cnst20098JN.dwg PLOT: December 03, 2020 at: 3:58pm Micki.Minsch

GENERAL CONSTRUCTION NOTES

1. CBJ ENGINEERING STANDARD DETAILS BOOK FOR CIVIL ENGINEERING PROJECTS AND SUBDIVISION IMPROVEMENTS DATED AUGUST, 2011 AND CBJ ENGINEERING STANDARD SPECIFICATIONS DATED DECEMBER, 2003 ARE MADE A PART OF THIS CONTRACT, WITH CURRENT REVISIONS AS APPLICABLE.
2. LARGE BOULDERS, HARDPAN, STUMPS, LOGS, ORGANICS AND GROUND WATER MAY BE ENCOUNTERED AT VARIOUS DEPTHS DURING EXCAVATION OPERATIONS. THESE MATERIALS SHALL BE DISPOSED OF AS REQUIRED BY THE ENGINEER.
3. GRADES AND ALIGNMENTS SHOWN ON THESE PLANS ARE SUBJECT TO MINOR REVISIONS AS APPROVED BY THE ENGINEER.
4. LOCATION OF WATER SYSTEM IMPROVEMENTS, SANITARY SEWER MANHOLES, STORM DRAIN STRUCTURES, PIPING AND PIPE LENGTHS ARE SUBJECT TO MINOR REVISIONS AS APPROVED BY THE ENGINEER.
5. LOCATIONS OF EXISTING UNDERGROUND SEWER, WATER, TELEPHONE, CABLE TELEVISION, AND POWER UTILITIES SHOWN ON THESE PLANS WERE DERIVED FROM CBJ AS-BUILTS OR FIELD LOCATES. ACTUAL LOCATIONS MAY VARY FROM THOSE SHOWN. THE CONTRACTOR IS RESPONSIBLE FOR LOCATING, PROTECTING AND MAINTAINING THE UTILITIES THROUGHOUT THE CONSTRUCTION OF THIS PROJECT. ANY DAMAGE RESULTING TO THESE UNDERGROUND UTILITIES DURING CONSTRUCTION SHALL BE PAID FOR BY THE CONTRACTOR AND SHALL BE CONSIDERED INCIDENTAL TO THE CONTRACT. CALL "DIAL BEFORE YOU DIG" @ 586-1333 FOR UNDERGROUND UTILITY LOCATES AND 811 ALASKA DIG LINE FOR ACS AND GCI PRIOR TO ANY EXCAVATION ACTIVITIES.
6. CONTRACTOR SHALL ASSURE GARBAGE PICKUP, DAILY MAIL SERVICE, FUEL AND SERVICE DELIVERIES WILL BE UNINTERRUPTED TO ALL RESIDENTS AFFECTED BY THIS PROJECT.
7. PROPERTY LINE LOCATIONS USED IN THESE PLANS WERE DERIVED FROM RECORD PLATS AND DO NOT REPRESENT A SUBDIVISION BOUNDARY SURVEY.
8. ALL SIGN INSTALLATIONS OR RELOCATIONS SHALL BE PERFORMED ACCORDING TO THE "MANUAL ON UNIFORM TRAFFIC CONTROL DEVICES" (M.U.T.C.D.) WITH THE ALASKA SUPPLEMENT.
9. ALL ITEMS DESIGNATED TO BE REMOVED SHALL BE DISPOSED OF AT AN APPROVED DISPOSAL SITE, EXCEPT AS NOTED IN THE CONTRACT DOCUMENTS.
10. PROVIDE KNOCKOUTS IN PRECAST STORM DRAIN STRUCTURES FOR ALL PIPES SHOWN ON THE PLANS.
10. ONLY HORIZONTAL ELBOW FITTINGS (BENDS) ARE SHOWN ON THE PLANS. ADDITIONAL FITTINGS WILL BE REQUIRED FOR VERTICAL DEFLECTIONS NEAR CONNECTION TO EXISTING PIPES, AND AT OTHER LOCATIONS REQUIRING GRADE CHANGES TO AVOID CONFLICTS.
11. THE CONTRACTOR SHALL NOT STORE MATERIALS OR EQUIPMENT OR OPERATE EQUIPMENT WITH ITS TRACKS OR WHEELS PLACED ON PRIVATE PROPERTY WITHOUT THE WRITTEN APPROVAL OF THE PROPERTY OWNER.
11. THE CONTRACTOR SHALL NOTIFY CBJ WATER UTILITIES OPERATOR LONI VANKIRK (723-4975) OF PROPOSED WATER SERVICE INTERRUPTION AND SUBMIT THE "WATER SYSTEM SPECIAL USE PERMIT" (COSIGNED BY THE ENGINEER) AT LEAST 48-HOURS PRIOR TO SHUTDOWN OR FLUSHING OF MAINLINE WATER PIPE. NO WATER SERVICE INTERRUPTION MAY PROCEED UNTIL THIS APPROVAL IS OBTAINED.
12. CONTRACTOR SHALL REFERENCE ALL EXISTING PROPERTY CORNER MONUMENTS (I.E. BRASS CAP MONUMENTS, REBARS OR CHISELED X'S) PRIOR TO CONSTRUCTION THAT WILL BE DISTURBED DURING HIS WORK, AND REMONUMENT AFTER CONSTRUCTION OPERATIONS. ALL WORK SHALL BE DONE BY, OR UNDER THE DIRECTION OF, AN ALASKA REGISTERED LAND SURVEYOR. ALL EXISTING PROPERTY CORNERS ARE NOT NECESSARILY SHOWN ON THE PLANS.
13. THE PLAN DRAWINGS DO NOT NECESSARILY SHOW ALL TREES AND SHRUBS THAT MAY BE ENCOUNTERED DURING CONSTRUCTION ACTIVITIES. NO TREES, SHRUBS OR LANDSCAPING ARE TO BE REMOVED OR DAMAGED, UNLESS SHOWN ON THE DRAWINGS OR DIRECTED BY THE ENGINEER.
14. "JUMPING JACK", OR SIMILAR TYPE COMPACTORS SHALL BE USED FOR COMPACTION WITHIN 18-INCHES OF THE OUTSIDE SURFACE OF ALL WATER VALVE BOXES, CATCH BASINS AND MANHOLES.
15. THE USE OF GROUT AND QUICKSET CEMENT PRODUCTS WITH ADJUSTING RINGS, BRICKS, WOOD, STONES AND OTHER SIMILAR GRADE ADJUSTMENT DEVICES TO SUPPORT CATCH BASIN FRAMES OVER CATCH BASINS AND MANHOLES WILL NOT BE PERMITTED ON THIS PROJECT. SEE CBJ STANDARD SPECIFICATIONS, SECTION 02502 - STORM SEWER MANHOLES, INLETS AND CATCH BASINS AND THE DRAWINGS FOR CATCH BASIN FRAME SUPPORT REQUIREMENTS. SANITARY SEWER MANHOLES SHALL BE ADJUSTED PER CBJ STANDARD SPECIFICATIONS 02402 - SANITARY SEWER MANHOLES AND CLEANOUTS.
16. THE CONTRACTOR SHALL INSTALL AND MAINTAIN ENGINEER APPROVED EROSION CONTROL DEVICES DURING CONSTRUCTION PER CBJ STANDARD SPECIFICATIONS SECTION 01570 REQUIREMENTS.
17. ALL WORK FOR THESE PLANS SHALL BE CONDUCTED IN STRICT ACCORDANCE WITH APPLICABLE LOCAL, STATE AND FEDERAL LAWS AND STANDARDS.

ABBREVIATIONS

AC	ASBESTOS CEMENT
ACS	ALASKA COMMUNICATIONS SYSTEMS
AEL&P	ALASKA ELECTRIC LIGHT & POWER
APPROX	APPROXIMATE
AST	ABOVEGROUND STORAGE TANK
BC	BACK OF CURB
BLVD	BOULEVARD
BOP	BEGINNING OF PROJECT
CB	CATCH BASIN
CBJ	CITY & BOROUGH OF JUNEAU
CHB	CHORD BEARING
CHL	CHORD LENGTH
C/L	CENTERLINE
CI	CAST IRON
CLR	CLEAR
CMP	CORRUGATED METAL PIPE
CONC	CONCRETE
CONT	CONTINUOUS
CPP	CORRUGATED POLYETHYLENE PIPE
CTE	CONNECT TO EXISTING
DI	DUCTILE IRON
DIP	DUCTILE IRON PIPE
DIA	DIAMETER
E	EASTING
EG	EXISTING GRADE
EL	ELEVATION
EOP	END OF PROJECT
EP	EDGE OF PAVEMENT
EXIST	EXISTING
EXP	EXPANSION
FG	FINISH GRADE
FH	FIRE HYDRANT
FL	FLOW LINE
GCI	GENERAL COMMUNICATION INC.
GV	GATE VALVE
HDPE	HIGH DENSITY POLYETHYLENE
HP	HIGH PRESSURE
IE	INVERT ELEVATION
L	LENGTH
LP	LOW POINT
LT	LEFT
MAX	MAXIMUM
MIN	MINIMUM
MJ	MECHANICAL JOINT
MTE	MATCH TO EXISTING
N	NORTHING
N/A	NOT APPLICABLE
NFS	NON-FROST SUSCEPTIBLE
NTS	NOT TO SCALE
NVC	NO VERTICAL CURVE
OC	ON CENTER
PC	POINT OF CURVATURE
PERF	PERFORATED
PI	POINT OF INTERSECTION
P/L	PROPERTY LINE
POC	POINT ON CURVE
POL	POINT ON LINE
PP	POWER POLE
PT	POINT OF TANGENCY
PVC	POLYVINYL CHLORIDE
R	RADIUS
ROW	RIGHT-OF-WAY
RP	RADIUS POINT
RT	RIGHT
SDMH	STORM DRAIN MANHOLE
SS	SANITARY SEWER
SSCO	SANITARY SEWER CLEANOUT
SSMH	SANITARY SEWER MANHOLE
STA	STATION
STD	STANDARD
SWPPP	STORM WATER POLLUTION PREVENTION PLAN
T	TANGENT
TBG	TOP BACK OF GUTTER
TBM	TEMPORARY BENCH MARK
TC	TOP OF CONCRETE
TOB	TOP OF BANK
TOP	TOP OF PIPE
TYP	TYPICAL
UD	UNDERDRAIN
UON	UNLESS OTHERWISE NOTED
UST	UNDERGROUND STORAGE TANK
VC	VERTICAL CURVE
VERT	VERTICAL
VPI	VERTICAL POINT OF INTERSECTION
W/	WITH

SYMBOLS

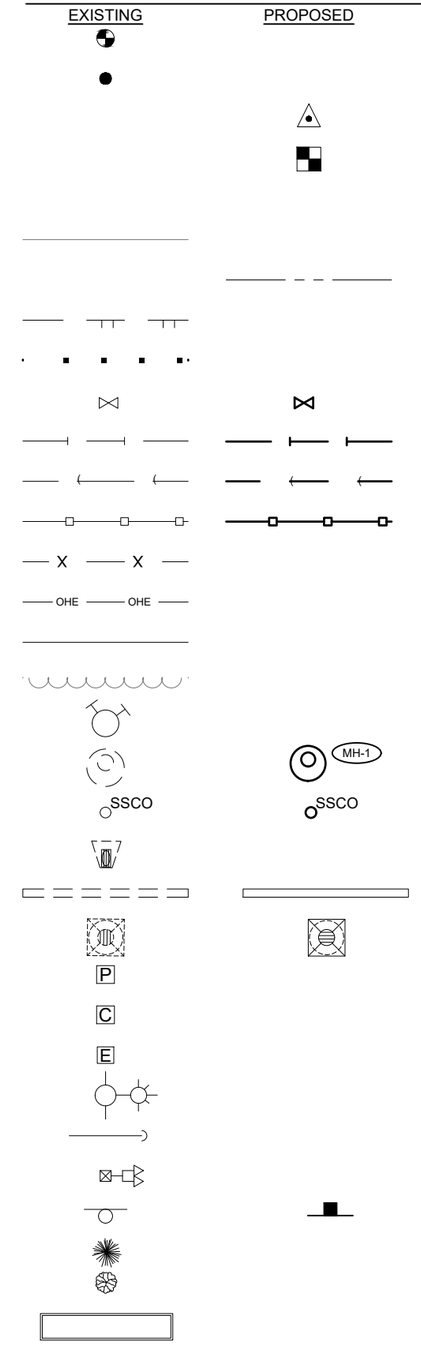

PRIMARY MONUMENT
SECONDARY MONUMENT
SURVEY SPIKE / MAG NAIL
TEMPORARY BENCHMARK
PROPERTY / BOUNDARY LINE
PROPERTY / BOUNDARY LINE UNSURVEYED
PROJECT BASELINE
TOP OF BANK
TOE OF SLOPE
WATER GATE VALVE/CURB STOP
WATER LINE/SERVICE
SEWER LINE/SERVICE
WOODEN FENCE
CHAIN-LINK FENCE
OVERHEAD ELECTRIC LINE
ASPHALT PAVEMENT
TREE LINE
FIRE HYDRANT
SANITARY SEWER MANHOLE
SANITARY SEWER CLEANOUT
CONCRETE HEADWALL W/ TRASH RACK
STORM SEWER PIPE
CATCH BASIN W/ AREA DRAIN
TELEPHONE PEDESTAL
CABLE PEDESTAL
ELECTRICAL PEDESTAL
POWER POLE WITH LIGHT
GUY WIRE
GANG STYLE MAILBOX
STREET SIGN
CONIFEROUS TREE
DECIDUOUS TREE
BUILDING FOUNDATION

P:\2020\20098JN-Bicknell_Delta\CIC\0001cmd\20098JN.dwg PLOT: December 03, 2020 at: 3:58pm Mick.Minsch

DESIGN MSM
DRAWN MSM
CHECK JMP
APPROVED JMP
FILE:

No.	DATE	REVISION	BY	APRVD.

DELTA DRIVE SUBDIVISION

JUNEAU, AK

BICKNELL INC. QUALITY CONSTRUCTION

STATE OF ALASKA 49TH Joseph M. Pusich CE 8152 REGISTERED PROFESSIONAL ENGINEER 12/03/20

PDC ENGINEERS
PLAN • DESIGN • CONSTRUCT
A BESPEC COMPANY
907.780.6060 | AECC605

GENERAL NOTES, ABBREVIATIONS AND SYMBOLS

DATE: Dec 03, 2020
PDC No. 20098JN
SHEET
C002

WATER SERVICE SUMMARY

LOT No.	STATION & OFFSET	SIZE/TYPE	REMARKS
2	10+95.1, 13.5' LT	1" POLY	SEE NOTE 1
3	11+28.9, 13.5' LT	1" POLY	SEE NOTE 1
4	11+81.8, 13.5' LT	1" POLY	SEE NOTE 1
5	12+15.3, 13.5' LT	1" POLY	SEE NOTE 1
6	12+58.8, 21.4' LT	1" POLY	SEE NOTE 1
7	11+68.0, 13.4' RT	1" POLY	NEW SERVICE
8	12+28.0, 13.5' RT	1" POLY	NEW SERVICE
9	14+71.4, 13.4' RT	1" POLY	NEW SERVICE
10	14+11.4, 13.3' RT	1" POLY	NEW SERVICE
11	15+22.0, 18.1' LT	1" POLY	SEE NOTE 1
12	14+96.0, 13.5' LT	1" POLY	SEE NOTE 1
13	14+62.5, 13.5' LT	1" POLY	SEE NOTE 1
14	14+09.2, 13.5' LT	1" POLY	SEE NOTE 1
15	13+85.5, 21.6' LT	1" POLY	SEE NOTE 1

NOTES:

1. EXISTING FOUNDATION PADS REPORTED TO HAVE 3/4" POLY WATER SERVICES TO EACH UNIT. EXISTING WATER SERVICES MAY BE REUSED IF FOUND TO BE IN SATISFACTORY CONDITION. FLUSHING, DISINFECTION AND PRESSURE TESTING SHALL BE PERFORMED ON THE EXISTING 3/4" POLY WATER SERVICES.

SEWER SERVICE SUMMARY

LOT No.	STATION & OFFSET	SIZE/TYPE	REMARKS
2	10+82.7, 14.0' LT	4" PVC	SEE NOTE 1
3	11+16.6, 14.0' LT	4" PVC	SEE NOTE 1
4	11+71.4, 14.0' LT	4" PVC	SEE NOTE 1
5	12+02.3, 14.0' LT	4" PVC	SEE NOTE 1
6	12+52.1, 14.0' LT	4" PVC	SEE NOTE 1
7	11+38.0, 14.5' RT	4" PVC	NEW SERVICE
8	11+98.0, 14.5' RT	4" PVC	NEW SERVICE
9	15+01.5, 14.5' RT	4" PVC	NEW SERVICE
10	14+41.4, 14.5' RT	4" PVC	NEW SERVICE
11	15+27.7, 14.0' LT	4" PVC	SEE NOTE 1
12	15+07.9, 14.0' LT	4" PVC	SEE NOTE 1
13	14+77.6, 14.0' LT	4" PVC	SEE NOTE 1
14	14+22.8, 14.0' LT	4" PVC	SEE NOTE 1
15	13+92.1, 14.0' LT	4" PVC	SEE NOTE 1

NOTES:

1. SEWER SERVICE LOCATIONS SHOWN ARE FROM LIMITED AS-BUILT INFORMATION AND WERE NOT FIELD LOCATED. EXISITNG 4" PVC SEWER SERVICES EXIST FOR LOTS 2-6 AND LOTS 11-15. CONTRACTOR SHALL FIELD LOCATE ALL SEWER SERVICES TO CONFIRM FINAL LOCATION FOR NEW SEWER SERVICE CLEANOUT INSTALLATION. STATION & OFFSET ARE GIVEN TO THE CENTER OF THE NEW CLEANOUT LID. IF EXISTING SANITARY SEWER SERVICES FOUND TO BE IN GOOD CONDITION CONTRACTOR MAY KEEP THEM IN SERVICE.
2. CONSTRUCT NEW 4" PVC SEWER SERVICE AND INSTALL NEW CLEANOUT NEAR PROPERTY LINE PER CBJ STANDARD DETAIL 213 AND CONNECT TO EXISTING SEWER SERVICE.
3. ADJUST SEWER SERVICE SLOPE TO PROVIDE MAXIMUM SEPARATION BETWEEN UTILITY CROSSINGS. INSTALL SWEEPS AS REQUIRED UPON APPROVAL OF THE ENGINEER.

STORM DRAIN STRUCTURE FRAME & GRATE SUMMARY

STRUCTURE No.	EAST JORDAN, OLYMPIC FOUNDRY Co., CBJ STANDARD No., OR APPROVED EQUAL
S-1	OLYMPIC FOUNDARY MH34SC

P:\2020\20098JN-Bicknell_Delta\CC0002cns\20098JN.dwg PLOT: December 03, 2020 at: 3:58pm Micki.Mirisch

DESIGN MSM
DRAWN MSM
CHECK JMP
APPROVED JMP
FILE:

No.	DATE	REVISION	BY	APRVD.

DELTA DRIVE SUBDIVISION
JUNEAU, AK

BICKNELL INC. QUALITY CONSTRUCTION

STATE OF ALASKA 49TH Joseph M. Pusich CE 8152 REGISTERED PROFESSIONAL ENGINEER 12/03/20

PDC ENGINEERS
PLAN • DESIGN • CONSTRUCT
A BESPEC COMPANY
9101 Mendenhall Mall Rd, Suite C, Juneau, AK 99801
907.780.6060 | AECC605

SUMMARY TABLES

DATE: Dec 03, 2020
PDC No. 20098JN
SHEET
C003

SURVEY NOTES

1. THE PURPOSE OF THIS SURVEY IS TO PROVIDE A TOPOGRAPHIC DESIGN SURVEY OF THE DELTA DRIVE DEVELOPMENT.
2. THE FIELD SURVEYS WERE PERFORMED ON MAY 26-27, 2020.
3. THE SURVEY EQUIPMENT UTILIZED DURING THIS SURVEY WAS TRIMBLE R8-2 GNSS ROVER AND BASE AND A TRIMBLE S-7 ROBOTIC TOTAL STATION UTILIZING STANDARD LASER MEASURING TECHNIQUES.
4. ALL DISTANCES AND DIMENSIONS ARE IN U.S. SURVEY FEET AND REDUCED TO THEIR HORIZONTAL VALUES.
5. CONTROL AND MONUMENT COORDINATES ARE IN AN ASSUMED LOCAL COORDINATE SYSTEM.
6. ELEVATIONS ARE IN AN ASSUMED LOCAL VERTICAL DATUM.
7. CONTOURS ARE SHOWN AT 1-FOOT INTERVALS.
8. ALL UTILITIES WERE LOCATED BY PDC AND ARE BASED ON OBSERVABLE EVIDENCE AND ABOVE GROUND APPURTENANCES AND FIELD RETRACEMENT PERFORMED BY PDC.
9. THIS SURVEY DOES NOT CONSTITUTE A SUBDIVISION AS PER ALASKA STATUTE 40.15.900(5)(a).

EXIST. SSCO	(CO1)
STA 10+04.9,	33.3 LT
EXIST. LID EL=	97.31
SW 8" (OUT) IE=	94.81

EXIST. SSMH	(M1)
STA 08+90.8,	25.9 RT
EXIST. LID EL=	98.50
E 6" (IN) IE=	92.94
NW 8" (OUT) IE=	92.84

NOTES:
1. ROADWAY AND UTILITY INFORMATION SHOWN ON DELTA DRIVE IS PROPOSED FROM CBJ CONTRACT BE21-028 "DELTA DRIVE RECONSTRUCTION." WORK IS SCHEDULED FOR SPRING/SUMMER 2021.
2. EXISTING 6" PVC SEWER MAIN AND 2" POLY PIPE FOR DOMESTIC WATER EXIST ON SITE.

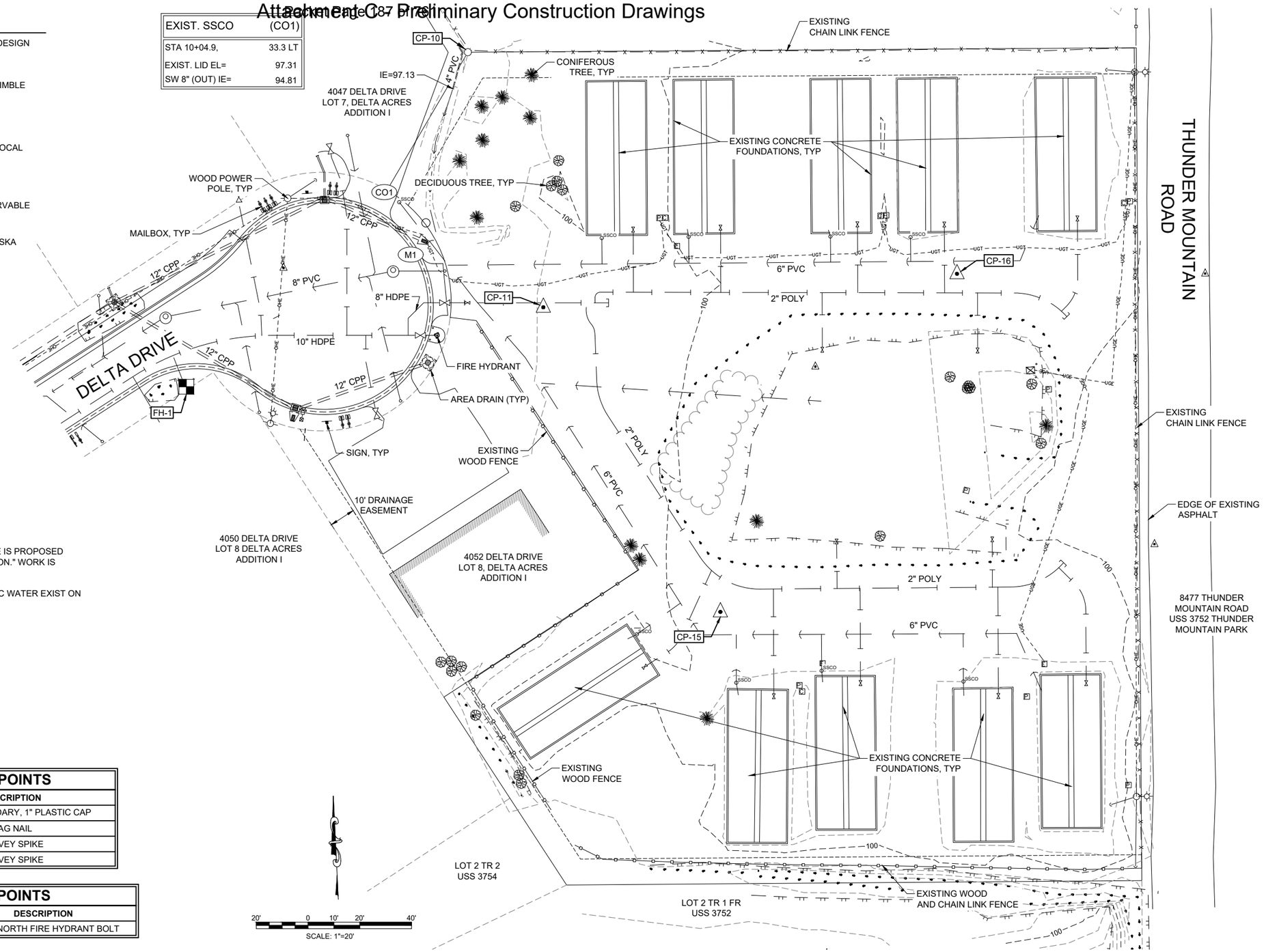

TABLE OF HORIZONTAL CONTROL POINTS

POINT #	NORTHING	EASTING	DESCRIPTION
CP 10	10112.63	10356.34	S-3650, SECONDARY, 1" PLASTIC CAP
CP 11	10014.23	10385.34	MAG NAIL
CP 15	9896.49	10453.74	SURVEY SPIKE
CP 16	10027.18	10545.16	SURVEY SPIKE

TABLE OF VERTICAL CONTROL POINTS

POINT #	NORTHING	EASTING	ELEVATION	DESCRIPTION
FH-1	9983.52	10247.42	100.44'	"X" ON NORTH FIRE HYDRANT BOLT

P:\2020\20098JN-Bicknell_Delta\CIC\2001cns\20098JN.dwg, PLOT: December 03, 2020 at: 3:58pm Micki Minsch

DESIGN MSM
DRAWN MSM
CHECK JMP
APPROVED JMP
FILE:

No.	DATE	REVISION	BY	APRVD.

DELTA DRIVE SUBDIVISION

JUNEAU, ALASKA

BICKNELL INC. QUALITY CONSTRUCTION

STATE OF ALASKA 49TH Joseph M. Pusich CE 8152 REGISTERED PROFESSIONAL ENGINEER 12/03/20

PDC ENGINEERS
PLAN • DESIGN • CONSTRUCT
A BESPEE COMPANY
550 Commercial Drive | Juneau, Alaska
907.780.6060 | AECC605

EXISTING SITE CONDITIONS

DATE: Dec 03, 2020
PDC No. 20098JN

SHEET
C004

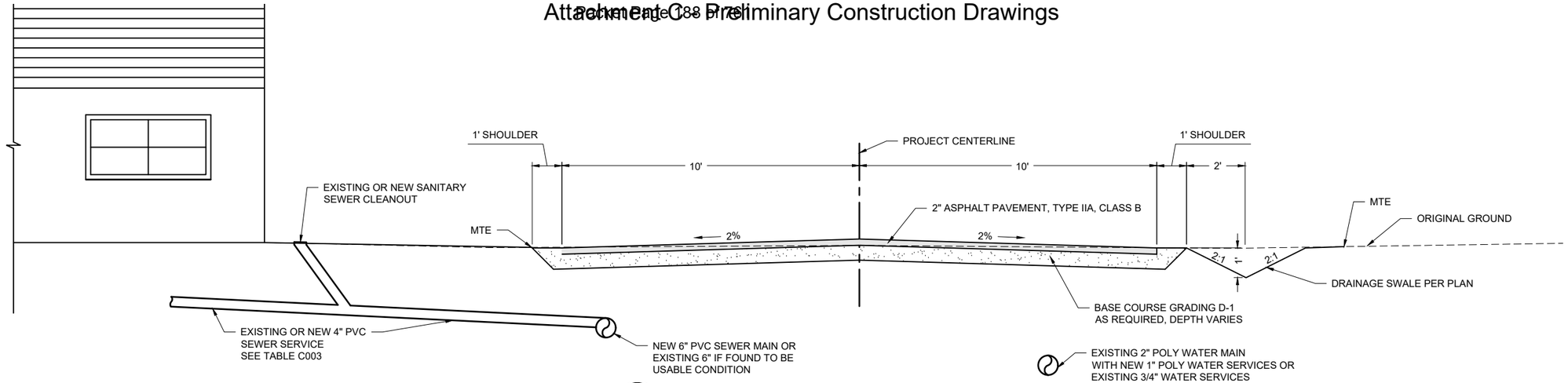

1 / 100 ROADWAY TYPICAL SECTION

SCALE: NTS

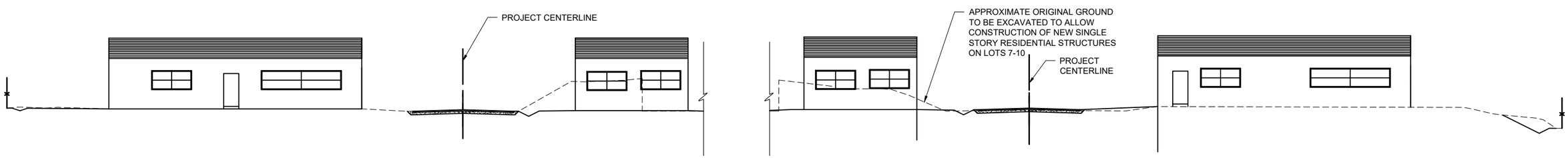

2 / C100 SITE TYPICAL SECTION

SCALE: NTS

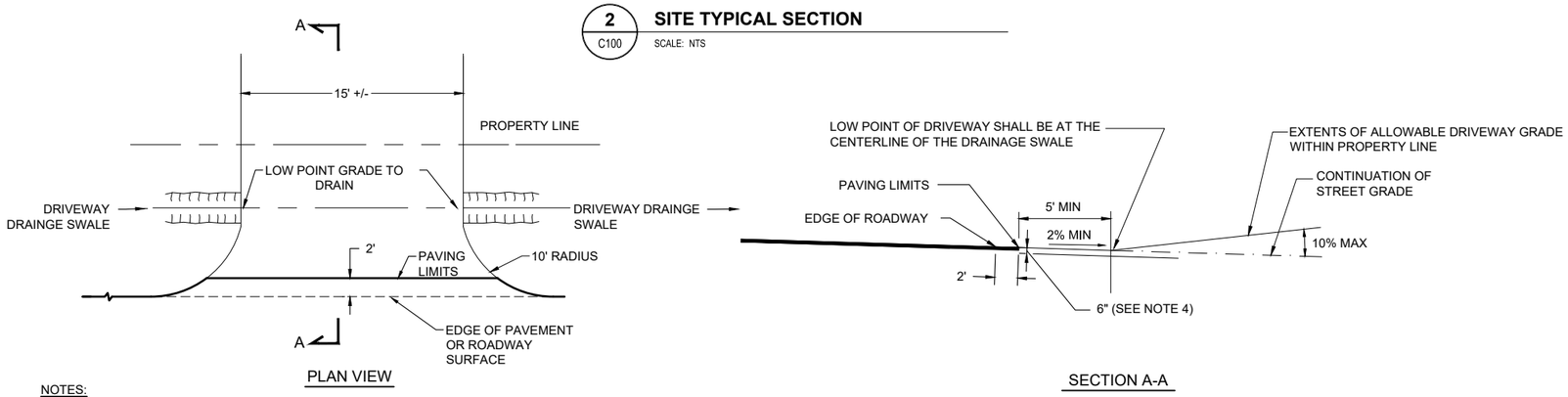

NOTES:

1. PAVING LIMIT FOR DRIVEWAYS SHALL BE 2' FROM THE EDGE OF ROADWAY OR AS APPROVED BY THE ENGINEER.
2. DRIVEWAY SWALE SHALL BE GRADED TO DRAIN INTO DRAINAGE SWALE

3 / C100 TYPICAL DRIVEWAY SWALE DETAIL

SCALE: NTS

SHEET C100 NOTES:

1. EXISTING 2" POLY WATER LINE WILL BE FLUSHED, DISINFECTED AND PRESSURE TESTED IN ACCORDANCE WITH CBJ STANDARD SPECIFICATIONS TO ENSURE COMPLIANCE WITH PUBLIC DRINKING WATER REGULATIONS.

P:\2020\20098JN-Bicknell_Delta\CIC3001\ms\20098JN.dwg PLOT: December 03, 2020at: 3:59pm Micki Minsch

DESIGN	MSM
DRAWN	MSM
CHECK	JMP
APPROVED	JMP
FILE:	

No.	DATE	REVISION	BY	APRVD.

DELTA DRIVE SUBDIVISION

JUNEAU, AK

BICKNELL INC. QUALITY CONSTRUCTION

STATE OF ALASKA 49TH Joseph M. Pusich CE 8152 REGISTERED PROFESSIONAL ENGINEER 12/03/20

PDC ENGINEERS
PLAN • DESIGN • CONSTRUCT
A BESPEC COMPANY
550 Commercial Drive, Anchorage, Alaska 99501
907.780.6060 | AECC605

TYPICAL SECTIONS

DATE: Dec 03, 2020
PDC No. 20098JN

SHEET C100

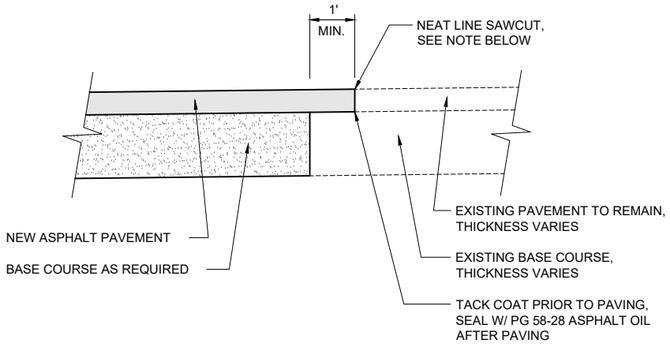

NOTE:
SAWCUT OF EXISTING PAVEMENT SHALL NOT BE MADE UNTIL 24 HOURS PRIOR TO FINAL PAVING.

1 C101 PAVEMENT MATCH DETAIL
SCALE: NTS

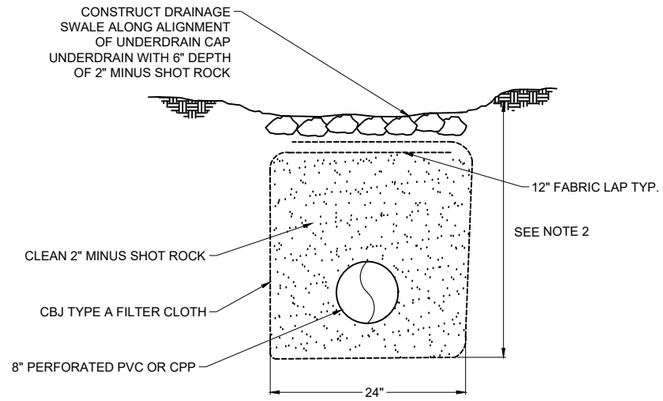

NOTES:
1. OUTFALL CONNECTIONS TO DAYLIGHT NEAR CULVERT INLETS PER PLAN.
2. DEPTH OF UNDERDRAIN VARIES, MIN SLOPE=0.50%

2 C101 8" UNDERDRAIN DETAIL
SCALE: NTS

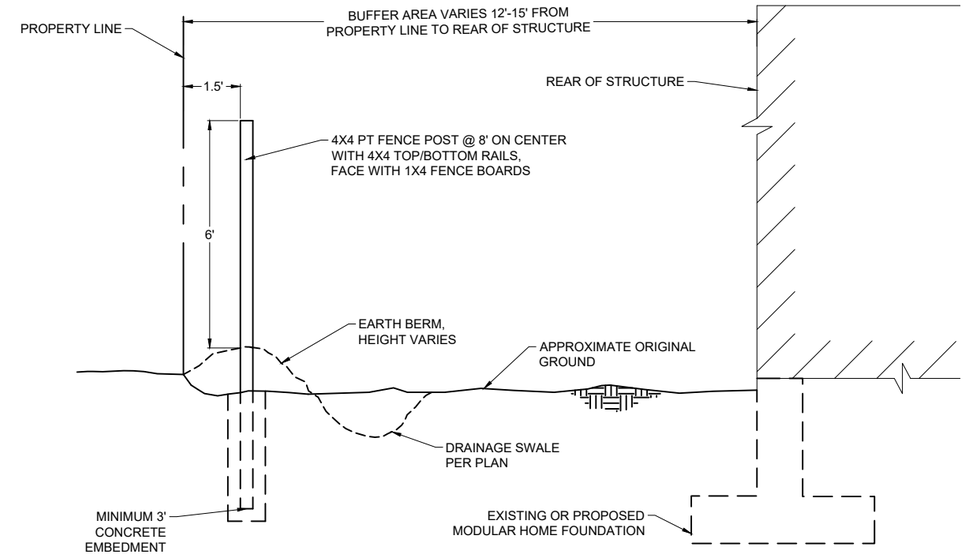

3 C101 TYPICAL FENCE AT REAR OF DWELLING
SCALE: 1"=2'

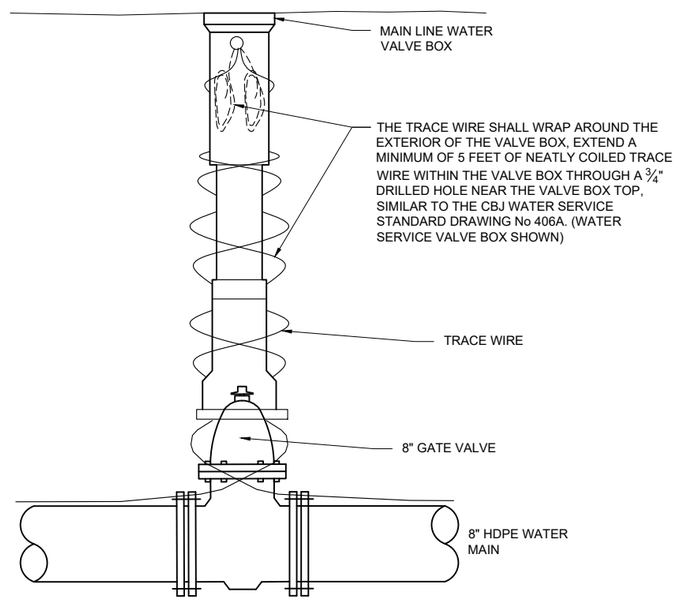

4 C101 MAIN LINE VALVE TRACE WIRE TERMINATION DETAIL
SCALE: NTS

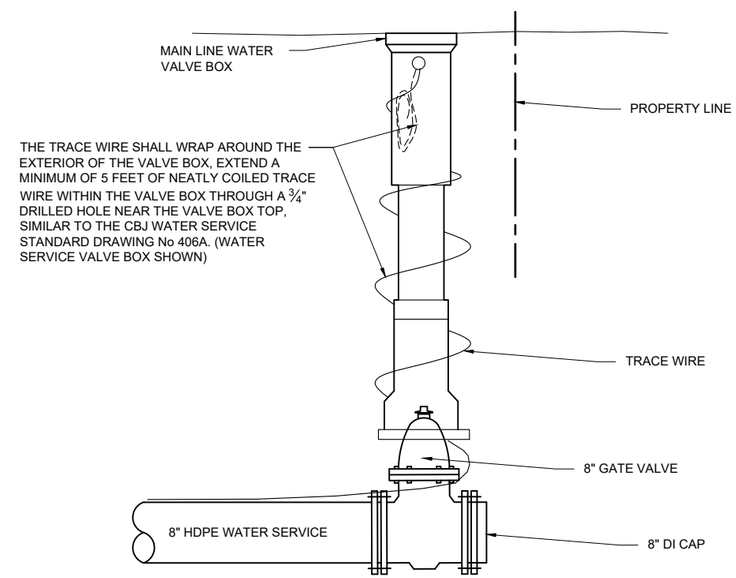

5 C101 WATER SERVICE VALVE TRACE WIRE TERMINATION DETAIL
SCALE: NTS

DESIGN MSM
DRAWN MSM
CHECK JMP
APPROVED JMP
FILE:

No.	DATE	REVISION	BY	APRVD.

DELTA DRIVE SUBDIVISION
JUNEAU, ALASKA

BICKNELL INC. QUALITY CONSTRUCTION

STATE OF ALASKA 49TH Joseph M. Pusich CE 8152 REGISTERED PROFESSIONAL ENGINEER 12/03/20

PDC ENGINEERS
PLAN • DESIGN • CONSTRUCT
A BESPEE COMPANY
8181 Commodore Drive | Juneau, Alaska
907.780.6060 | AECC605

CONSTRUCTION DETAILS

DATE: Dec 03, 2020
PDC No. 20098JN
SHEET
C101

P:\2020\20098JN-Bicknell_Delta\CIC\3001cns\20098JN.dwg, PLOT: December 03, 2020 at: 3:59pm Micki Minsch

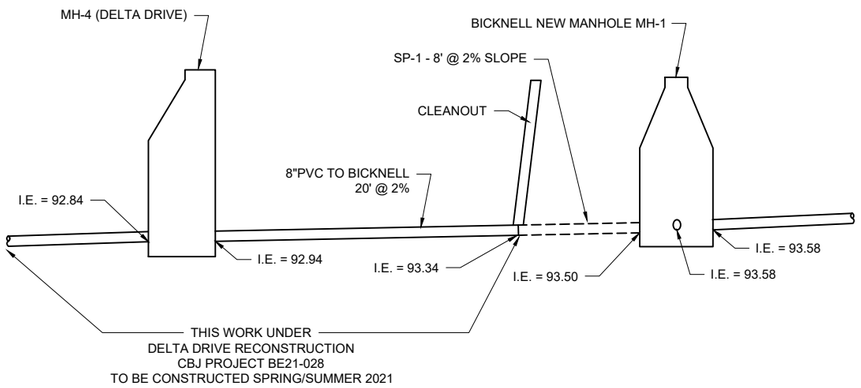

1 / C102 **SEWER PROFILE CONNECTION**

SCALE: NTS

DESIGN MSM
DRAWN MSM
CHECK JMP
APPROVED JMP
FILE:

No.	DATE	REVISION	BY	APRVD.

DELTA DRIVE SUBDIVISION

JUNEAU, AK

BICKNELL INC. QUALITY CONSTRUCTION

STATE OF ALASKA 49TH Joseph M. Pusich CE 8152 NORTHERN REGION ENGINEER 12/03/20

PDC ENGINEERS
PLAN • DESIGN • CONSTRUCT
A BESPEC COMPANY
9 0 7 . 7 8 0 . 6 0 6 0 | A E C C 6 0 5

CONSTRUCTION DETAILS

DATE: Dec 03, 2020
PDC No. 20098JN

SHEET
C102

P:\2020\20098JN-Bicknell_Delta\CIC\3001cnst\20098JN.dwg PLOT: December 03, 2020 at: 3:59pm Mick Minsch

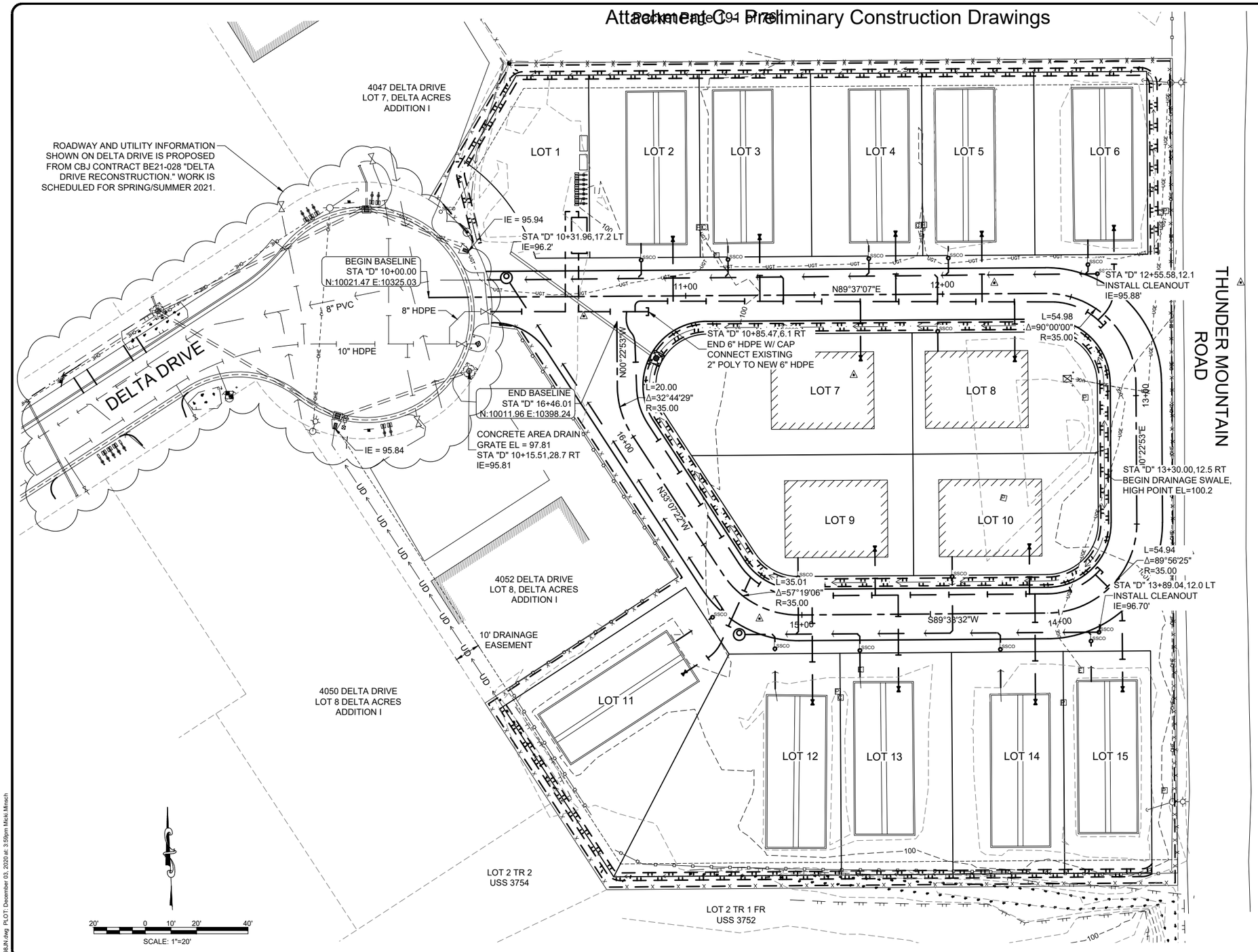

DIAL BEFORE YOU DIG!
586-1333
U/G POWER, TELEPHONE & T.V. SHOWN ON THIS DRAWING INDICATE EXISTENCE ONLY AND DO NOT SUBSTITUTE FOR FIELD LOCATES
FOR ACS AND GCI LOCATES DIAL THE 811 ALASKA DIGLINE

8477 THUNDER MOUNTAIN ROAD
USS 3752 THUNDER MOUNTAIN PARK

P:\2020\20098JN-Bicknell_Delta\C\C2001cns\20098JN.dwg PLOT: December 03, 2020 at: 3:59pm Micki Minsch

DESIGN	MSM
DRAWN	MSM
CHECK	JMP
APPROVED	JMP
FILE:	

No.	DATE	REVISION	BY	APRVD.

DELTA DRIVE SUBDIVISION

JUNEAU, ALASKA

BICKNELL INC. QUALITY CONSTRUCTION

STATE OF ALASKA 49TH Joseph M. Pusich CE 8152 PROFESSIONAL ENGINEER 12/03/20

PDC ENGINEERS
PLAN • DESIGN • CONSTRUCT
A BESPEC COMPANY
3800 Commercial Drive | Anchorage, Alaska 99501
907.780.6060 | AECC605

OVERALL SITE PLAN

DATE: Dec 03, 2020
PDC No. 20098JN

SHEET
C200

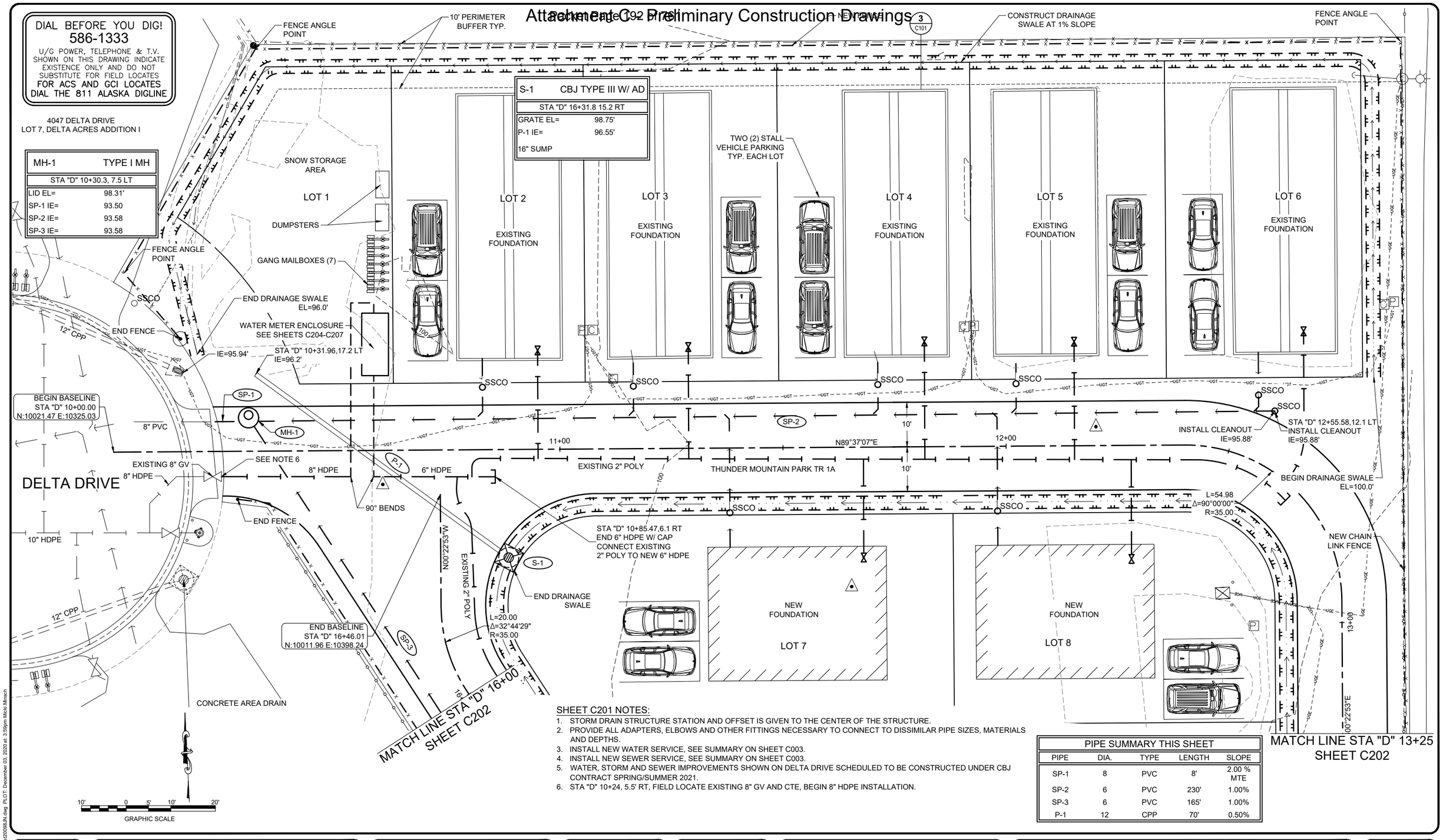

SHEET C201 NOTES:

1. STORM DRAIN STRUCTURE STATION AND OFFSET IS GIVEN TO THE CENTER OF THE STRUCTURE.
2. PROVIDE ALL ADAPTERS, ELBOWS AND OTHER FITTINGS NECESSARY TO CONNECT TO DISSIMILAR PIPE SIZES, MATERIALS AND DEPTHS.
3. INSTALL NEW WATER SERVICE, SEE SUMMARY ON SHEET C003.
4. INSTALL NEW SEWER SERVICE, SEE SUMMARY ON SHEET C003.
5. WATER, STORM AND SEWER IMPROVEMENTS SHOWN ON DELTA DRIVE SCHEDULED TO BE CONSTRUCTED UNDER CBJ CONTRACT SPRING/SUMMER 2021.
6. STA "D" 10+24, 5.5' RT, FIELD LOCATE EXISTING 8" GV AND CTE, BEGIN 8" HDPE INSTALLATION.

PIPE SUMMARY THIS SHEET

PIPE	DIA.	TYPE	LENGTH	SLOPE
SP-1	8	PVC	8'	2.00 % MTE
SP-2	6	PVC	230'	1.00%
SP-3	6	PVC	165'	1.00%
P-1	12	CPP	70'	0.50%

P:\2020\20098JN-Bicknell_Delta\DC\2001cnst\20098JN.dwg PLOT: December 03, 2020 at: 3:59pm Mickl.Mitsch

DESIGN MSM
DRAWN MSM
CHECK JMP
APPROVED JMP
FILE:

No.	DATE	REVISION	BY	APRVD.

DELTA DRIVE SUBDIVISION

JUNEAU, AK

BICKNELL INC. QUALITY CONSTRUCTION

STATE OF ALASKA 49TH Joseph M. Pusich CE 8152 REGISTERED PROFESSIONAL ENGINEER 12/03/20

PDC ENGINEERS
PLAN • DESIGN • CONSTRUCT
A BESPEC COMPANY
9360 Glacier Hwy, Juneau, AK 99801
907.780.6060 | AECC605

SITE & UTILITY PLAN

DATE: Dec 03, 2020
PDC No. 20098JN

SHEET
C201

SHEET C202 NOTES:

1. STORM DRAIN STRUCTURE STATION AND OFFSET IS GIVEN TO THE CENTER OF THE STRUCTURE. FRAME ELEVATION IS GIVEN TO THE TOP, FRONT OF FRAME.
2. PROVIDE ALL ADAPTERS, ELBOWS AND OTHER FITTINGS NECESSARY TO CONNECT TO DISSIMILAR PIPE SIZES, MATERIALS AND DEPTHS.
3. INSTALL NEW WATER SERVICE, SEE SUMMARY ON SHEET C003.
4. INSTALL NEW SEWER SERVICE, SEE SUMMARY ON SHEET C003.

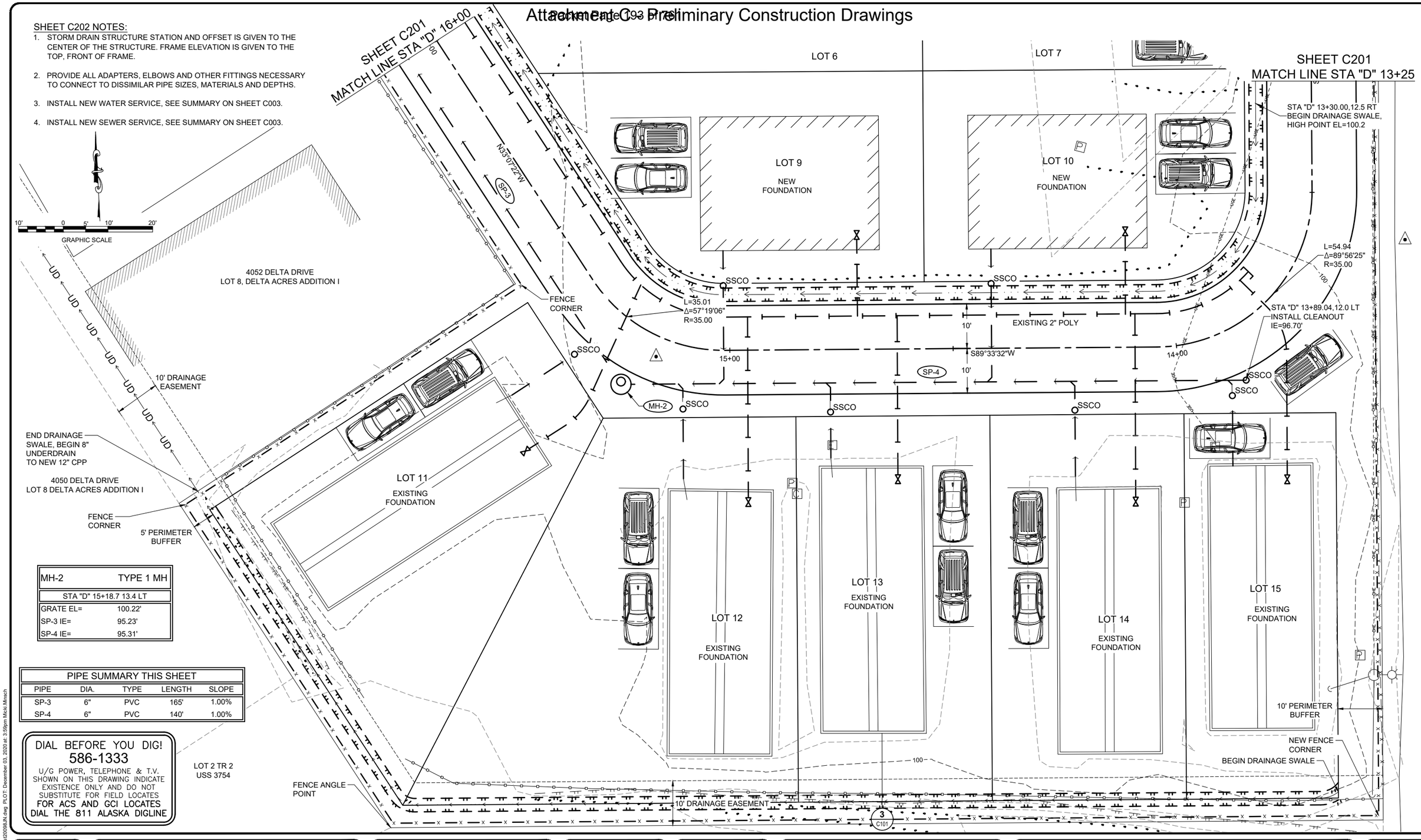

MH-2	TYPE 1 MH
STA "D" 15+18.7 13.4 LT	
GRATE EL=	100.22'
SP-3 IE=	95.23'
SP-4 IE=	95.31'

PIPE SUMMARY THIS SHEET				
PIPE	DIA.	TYPE	LENGTH	SLOPE
SP-3	6"	PVC	165'	1.00%
SP-4	6"	PVC	140'	1.00%

DIAL BEFORE YOU DIG!
586-1333
U/G POWER, TELEPHONE & T.V. SHOWN ON THIS DRAWING INDICATE EXISTENCE ONLY AND DO NOT SUBSTITUTE FOR FIELD LOCATES
FOR ACS AND GCI LOCATES
DIAL THE 811 ALASKA DIGLINE

DESIGN MSM
DRAWN MSM
CHECK JMP
APPROVED JMP
FILE:

No.	DATE	REVISION	BY	APRVD.

DELTA DRIVE SUBDIVISION
JUNEAU, ALASKA

BICKNELL INC. QUALITY CONSTRUCTION

STATE OF ALASKA 49TH Joseph M. Pusich CE 8152 REGISTERED PROFESSIONAL ENGINEER 12/03/20

PDC ENGINEERS
PLAN • DESIGN • CONSTRUCT
A BESPEC COMPANY
9360 Glacier Hwy, Juneau, AK 99801
907.780.6060 | AECC605

SITE & UTILITY PLAN

DATE: Dec 03, 2020
PDC No. 20098JN
SHEET C202

P:\2020\20098JN-Bicknell_Delta\CC2001cna\20098JN.dwg PLOT: December 03, 2020 at: 3:59pm Micki Minsch

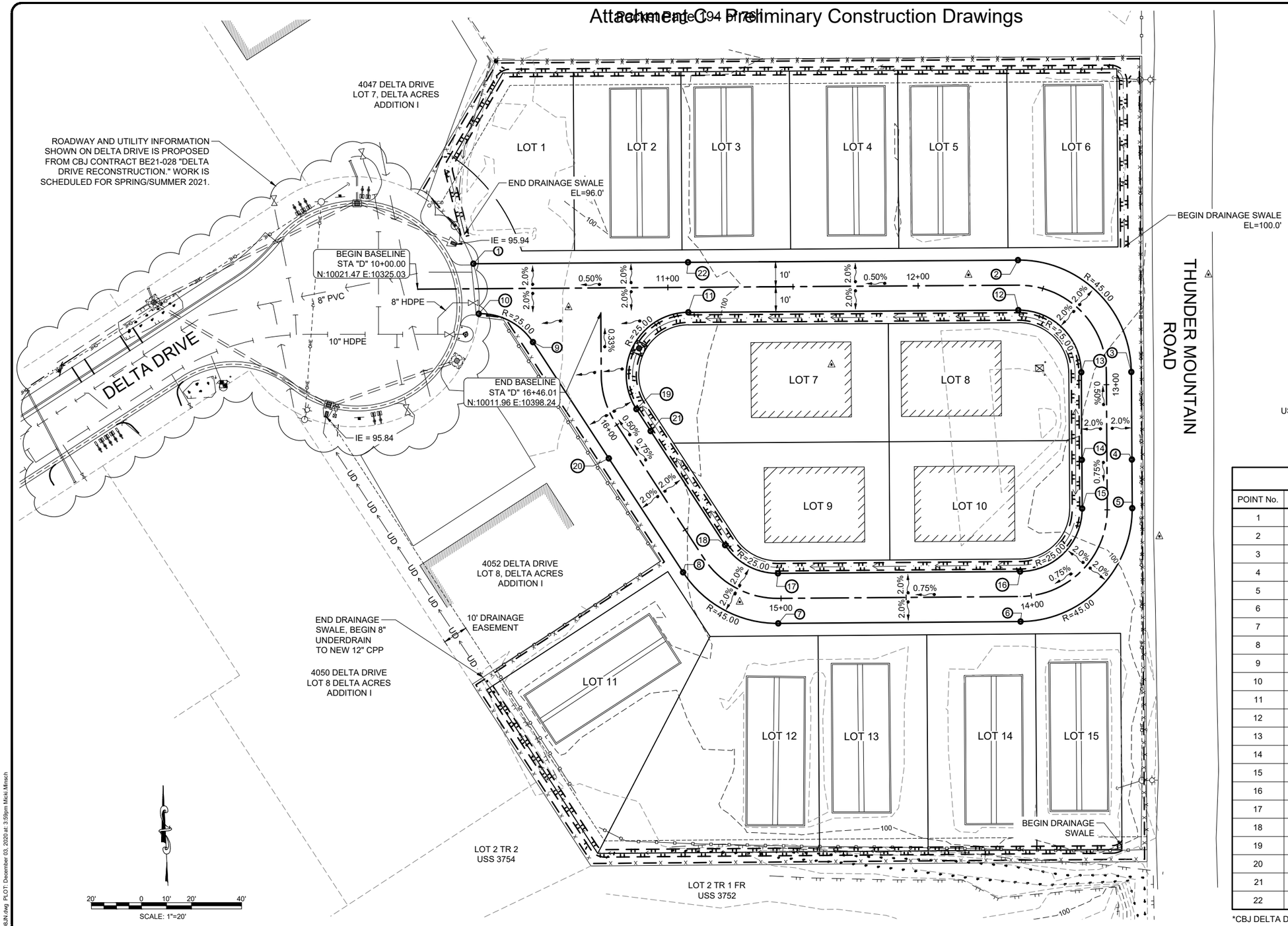

DIAL BEFORE YOU DIG!
586-1333
U/G POWER, TELEPHONE & T.V. SHOWN ON THIS DRAWING INDICATE EXISTENCE ONLY AND DO NOT SUBSTITUTE FOR FIELD LOCATES
FOR ACS AND GCI LOCATES DIAL THE 811 ALASKA DIGLINE

GRADE POINT SUMMARY TABLE THIS SHEET

POINT No.	NORTHING	EASTING	ELEVATION	DESCRIPTION
1	10031.62	10347.33	98.29 *	EDGE OF PAVEMENT/MTE
2	10033.07	10564.96	100.32	EDGE OF PAVEMENT/PC
3	9988.37	10610.26	100.88	EDGE OF PAVEMENT/PT
4	9953.35	10610.49	101.24	EDGE OF PAVEMENT/HIGH POINT
5	9933.92	10610.62	101.09	EDGE OF PAVEMENT/PC
6	9888.64	10565.97	100.68	EDGE OF PAVEMENT/PT
7	9887.89	10469.17	99.97	EDGE OF PAVEMENT/PC
8	9908.30	10431.14	99.67	EDGE OF PAVEMENT/PT
9	10000.30	10371.11	98.59	EDGE OF PAVEMENT/PC
10	10011.64	10349.47	98.34 *	EDGE OF PAVEMENT/PT/MTE
11	10012.19	10433.23	99.66	EDGE OF PAVEMENT/PT
12	10013.07	10565.10	100.32	EDGE OF PAVEMENT/PC
13	9988.24	10590.26	100.88	EDGE OF PAVEMENT/PT
14	9953.22	10590.50	101.24	EDGE OF PAVEMENT/HIGH POINT
15	9933.79	10590.62	101.09	EDGE OF PAVEMENT/PC
16	9908.64	10565.82	100.68	EDGE OF PAVEMENT/PT
17	9907.89	10469.02	99.97	EDGE OF PAVEMENT/PC
18	9919.17	10447.92	99.67	EDGE OF PAVEMENT/PT
19	9973.53	10412.46	99.19	EDGE OF PAVEMENT/PC
20	9953.85	10401.42	99.29	EDGE OF PAVEMENT
21	9964.78	10418.17	99.29	EDGE OF PAVEMENT
22	10032.19	10433.09	99.66	EDGE OF PAVEMENT

*CBJ DELTA DRIVE RECONSTRUCTION TOP OF ASPHALT PAVEMENT ELEVATION

P:\2020\20098JN-Bicknell_Delta\CIC\2001ms\20098JN.dwg PLOT: December 03, 2020 at: 3:59pm Mickl.Mmsch

DESIGN MSM
DRAWN MSM
CHECK JMP
APPROVED JMP
FILE:

No.	DATE	REVISION	BY	APRVD.

DELTA DRIVE SUBDIVISION
JUNEAU, ALASKA

BICKNELL INC. QUALITY CONSTRUCTION

STATE OF ALASKA 49TH Joseph M. Pusich CE 8152 REGISTERED PROFESSIONAL ENGINEER 12/03/20

PDC ENGINEERS
PLAN • DESIGN • CONSTRUCT
A BESPEC COMPANY
550 Cordova St | Juneau, Alaska
907.780.6060 | AECC605

GRADING PLAN

DATE: Dec 03, 2020
PDC No. 20098JN
SHEET
C203

NOTES:

1. CBJ SPECIFICATION 02601 - WATER SYSTEM AND 02602 - VALVES, AND OTHER CBJ STANDARD SPECIFICATIONS APPLY EXCEPT AS MODIFIED BELOW.
2. ALL JOINTS BETWEEN THE CONNECTIONS TO THE MAINLINES ON BOTH SIDES OF THE METER ENCLOSURE SHALL BE RESTRAINED.
3. ALL BOLTS, NUTS AND WASHERS SHALL BE SERIES 300 STAINLESS STEEL.
4. ALL METALLIC VALVES AND FITTINGS SHALL BE FACTORY EPOXY COATED INSIDE AND OUT, 8 MILS MINIMUM.
5. BURIED FITTINGS SHALL BE THRUST BLOCKED PER CBJ STANDARD DETAILS.
6. DIP, HDPE PIPE AND PIPE STANDS ARE PER CBJ SECTION 02602.
7. ALL PIPE AND SPOOL PIECES ABOVE GRADE ARE TO BE FLANGED, WITH 125# FLANGES. USE A FLANGE ADAPTOR WITH THE CONNECTION TO HDPE.
8. GATE VALVES SHALL HAVE HAND WHEELS.
9. PRESSURE GAUGE IS TO BE STAINLESS STEEL, GLYCERIN FILLED, WITH A 3½ OR 4-INCH FACE AND 150 TO 160 PSI PRESSURE RANGE.
10. THE GATE VALVE AHEAD OF THE METER IS TO BE FLXFL, WHILE THE VALVES ON EITHER SIDE OF THE DOUBLE CHECK MAY BE FLXVIC. VALVES SHALL COMPLY WITH AWWA C509 OR C515.
11. THE METER SHALL BE A 4-INCH NEPTUNE TRUFLO COMPOUND METER WITH A STRAINER.
12. THE DOUBLE CHECK VALVE SHALL BE A 6-INCH ZURN 350A WITH THE GATE VALVES, OR APPROVED EQUAL. THE DOUBLE CHECK SHALL MEET THE REQUIREMENTS OF AWWA C510 AND BE ASSE AND NSF LISTED.
13. TWO DUPLEX 120-V ELECTRICAL OUTLETS SHALL BE INSTALLED INSIDE THE ENCLOSURE. CONDUIT SHALL RUN FROM THE EXTERIOR MOUNTED DISCONNECT BOX NEAR THE ELECTORAL METER, UNDERGROUND, AND COME UP THROUGH THE CONCRETE SLAB. THE OUTLETS SHALL BE MOUNTED ABOVE THE FLOOR AND LOCATED FOR EASY ACCESS THROUGH THE PANELS.
14. ALL ELECTRICAL WORK SHALL BE PERFORMED BY A LICENSED ELECTRICIAN AND COMPLY WITH ALL APPROPRIATE ELECTRICAL CODES. ANY REQUIRED ELECTRICAL PERMITS SHALL BE OBTAINED. COORDINATE WITH THE LOCAL ELECTRICAL UTILITY AS NECESSARY AND PROVIDE ANY EQUIPMENT THEY REQUIRE TO COMPLETE THEIR SERVICE TO THIS LOCATION.

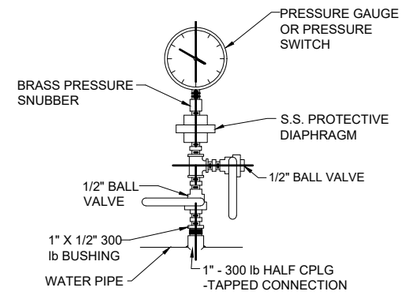

1 C204 **PRESSURE GAUGE OR SWITCH**
SCALE: NTS

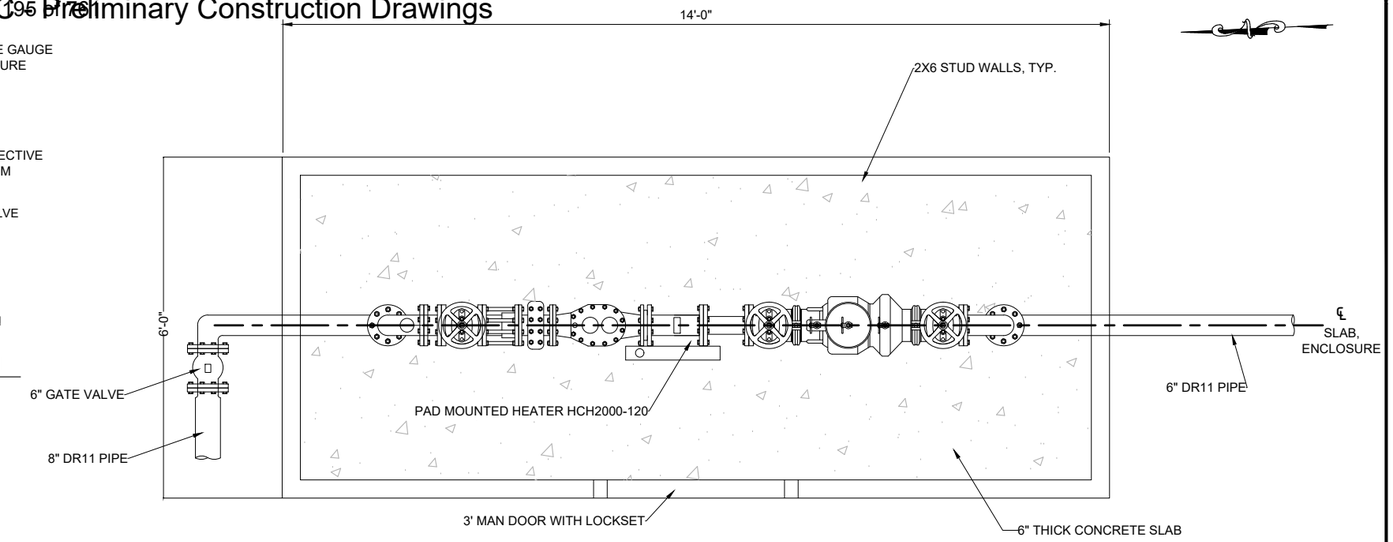

2 C204 **WATER METER ENCLOSURE - PLAN**
SCALE: NTS

NOTES:
1. ALL JOINTS TO BE FUSED, FLANGED, OR RESTRAINED TO WITHSTAND A MINIMUM PRESSURE OF 200 PSI.

DESIGNATION	COMPONENT DESCRIPTION
A	6X4" DI REDUCING 90° ELBOW W/ TAP AND 1" AIR RELEASE VALVE
B	4" NRS GATE VALVE
C	4" DISMANTLING JOINT, SET TO 8" ±
D	4" METER W/ STRAINER
E	4" DI PIPE SPOOL W/ 1" TAPPED CONNECTION, SAMPLING PORT, AND PRESSURE GAGUE (SEE DETAIL)
F	4" SPOOL PIECE
G	4" DOUBLE CHECK VALVE
H	4" DI 90° BEND

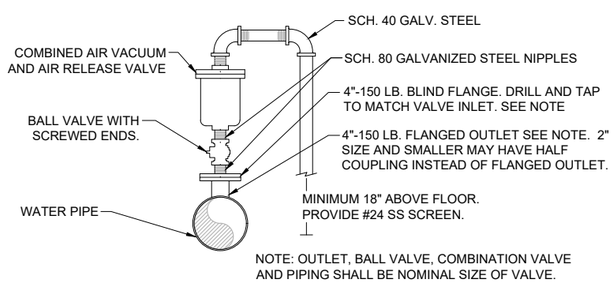

3 C204 **AIR/VACUUM & AIRE RELEASE VALVE ASSEMBLY**
SCALE: NTS

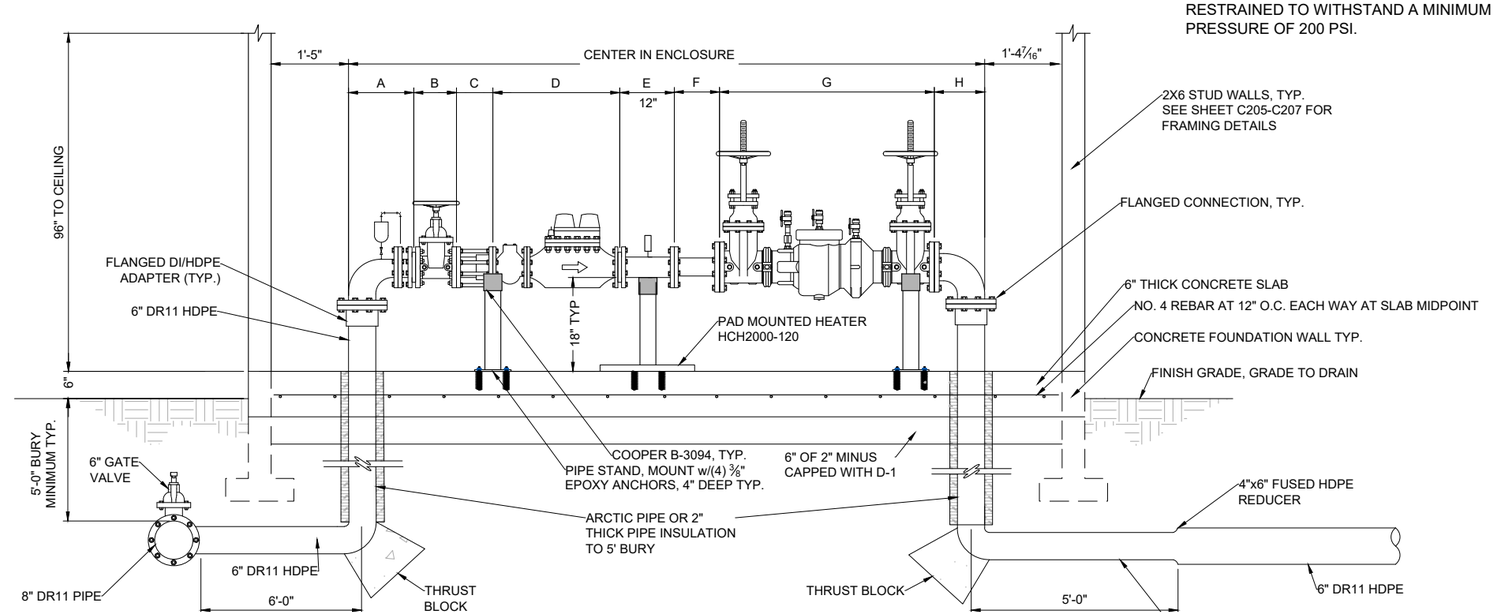

4 C204 **WATER METER ENCLOSURE - ELEVATION**
SCALE: NTS

DESIGN	MSM
DRAWN	MSM
CHECK	JMP
APPROVED	JMP
FILE:	

No.	DATE	REVISION	BY	APRVD.

DELTA DRIVE SUBDIVISION
JUNEAU, AK

BICKNELL INC. QUALITY CONSTRUCTION

STATE OF ALASKA 49TH Joseph M. Pusich CE 8152 REGISTERED PROFESSIONAL ENGINEER 12/03/20

PDC ENGINEERS
PLAN • DESIGN • CONSTRUCT
A BESPEC COMPANY
9360 Glacier Hwy, Suite A, Juneau, AK 99801
907.780.6060 | AECC605

WATER METER ENCLOSURE DETAILS

DATE: Dec 03, 2020
PDC No. 20098JN
SHEET C204

P:\2020\20098JN-Bicknell_Delta\DC2001\cns\20098JN.dwg PLOT: December 03, 2020 at: 3:59pm Micki.Minsch

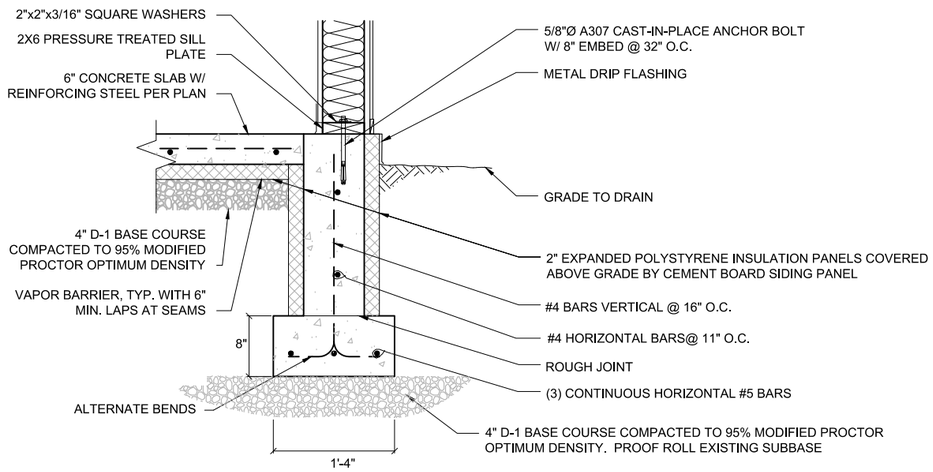

1 / C205 FOUNDATION AND STEM WALL DETAIL
SCALE: NTS

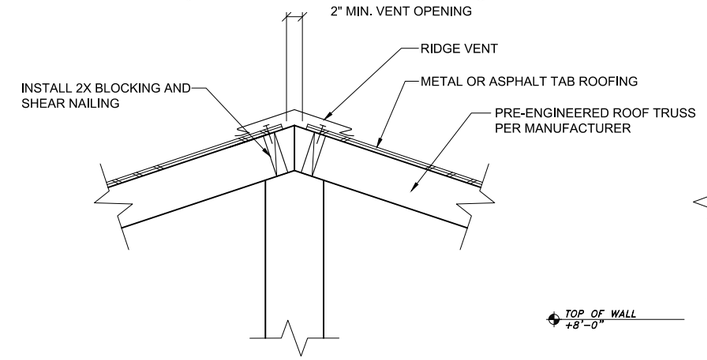

2 / C205 ROOF RIDGE VENT DETAIL
SCALE: NTS

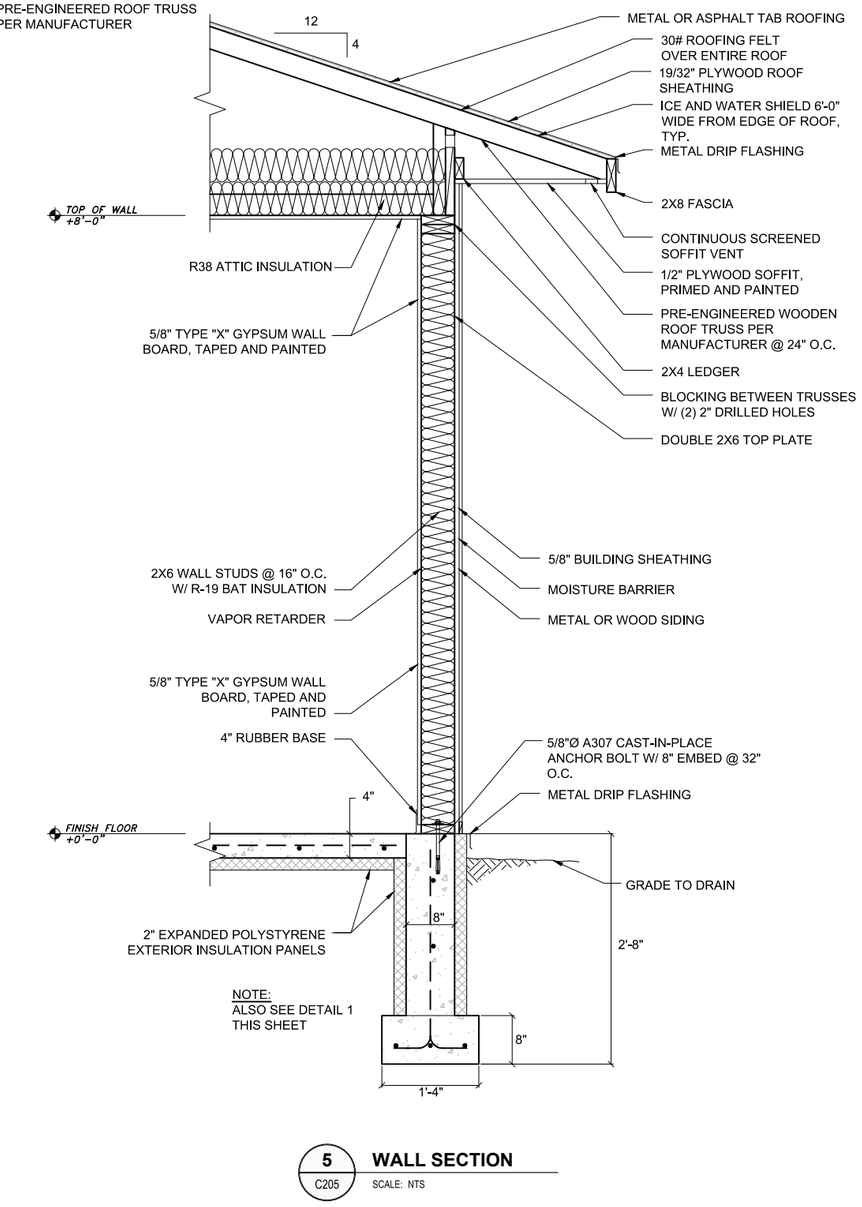

5 / C205 WALL SECTION
SCALE: NTS

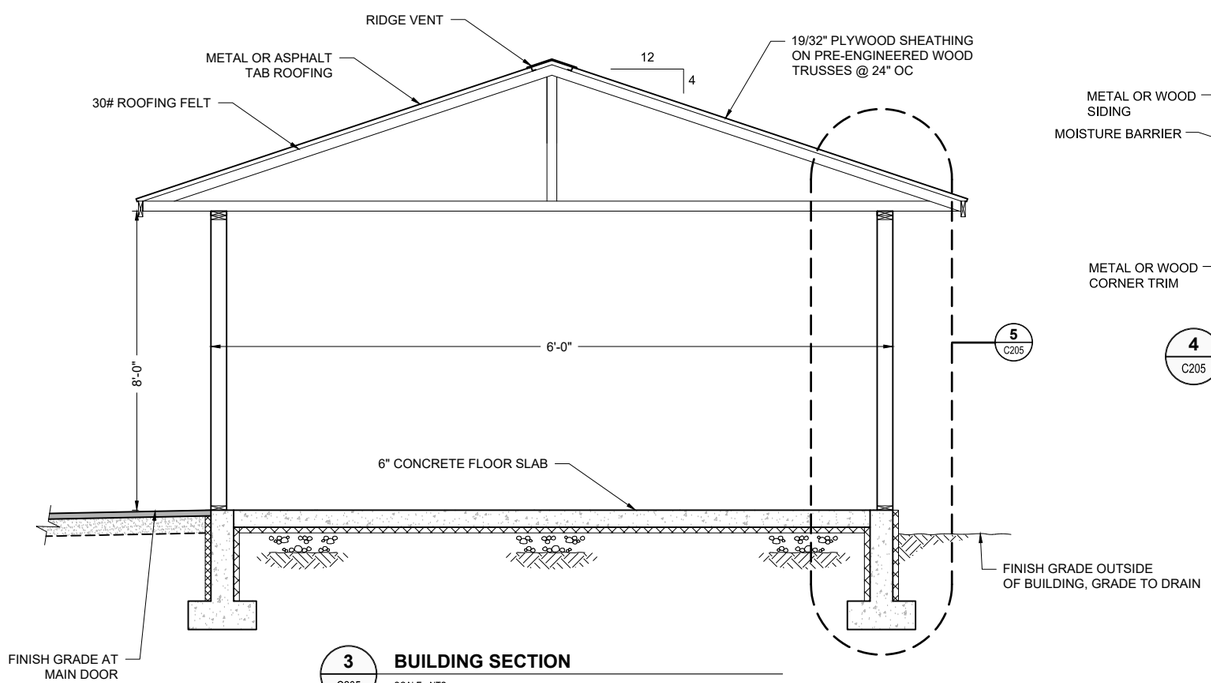

3 / C205 BUILDING SECTION
SCALE: NTS

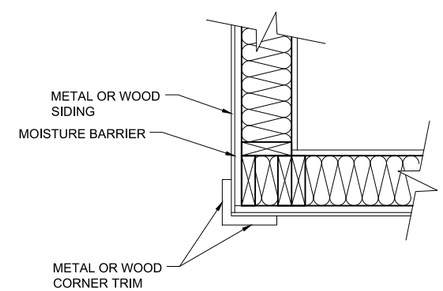

4 / C205 OUTSIDE CORNER DETAIL
SCALE: NTS

P:\2020\20098JN-Bicknell_Delta\DC\2001cns\20098JN.dwg PLOT: December 03, 2020at: 3:59pm Micki Minsch

DESIGN	MSM
DRAWN	MSM
CHECK	JMP
APPROVED	JMP
FILE:	

No.	DATE	REVISION	BY	APRVD.

DELTA DRIVE SUBDIVISION
JUNEAU, ALASKA

BICKNELL INC. QUALITY CONSTRUCTION

STATE OF ALASKA 49TH Joseph M. Pusich CE 8152 WASHINGTON, U.S.A. 12/03/20

PDC ENGINEERS
PLAN • DESIGN • CONSTRUCT
A BESPEC COMPANY
9360 Glacier Hwy, Juneau, AK 99801
907.780.6060 | AECC605

WATER METER ENCLOSURE DETAILS

DATE: Dec 03, 2020
PDC No. 20098JN

SHEET
C205

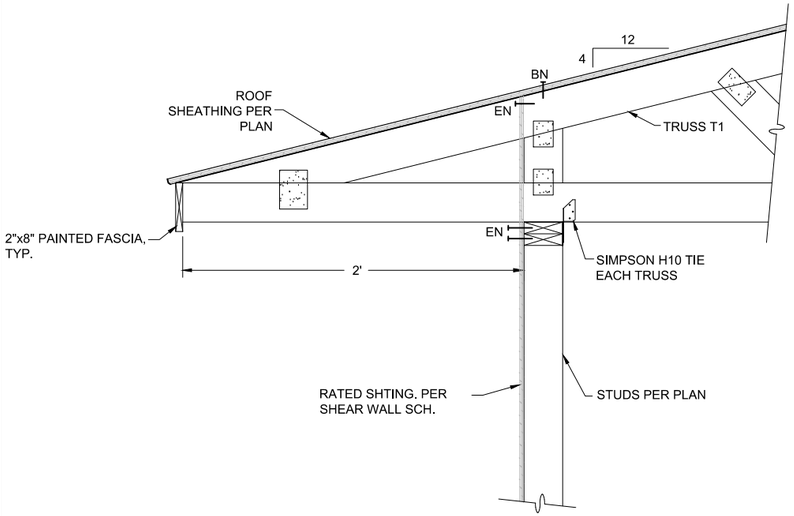

1 C206 **ROOF TRUSS TO WALL CONNECTION**
SCALE: NTS

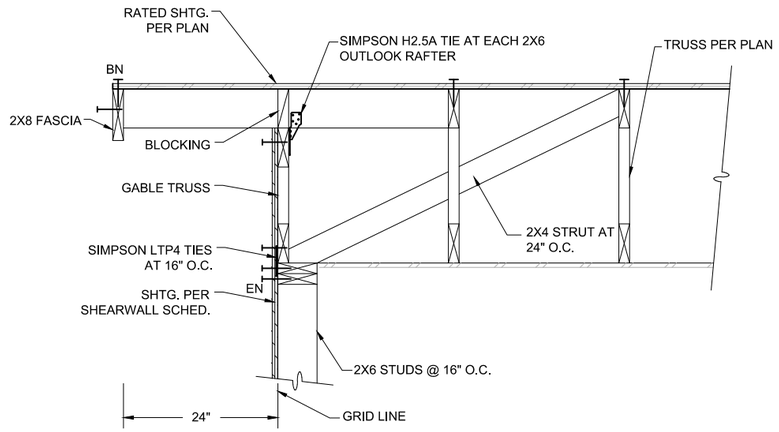

2 C206 **GABLE END DETAIL**
SCALE: NTS

NOTES:
1. WHERE NO STUD TO STUD NAILING IS INDICATED, NAIL STUDS TOGETHER w/ 16d @ 12"o.c., TYP.
2. REF. PLANS FOR STUD SIZE & SPACING

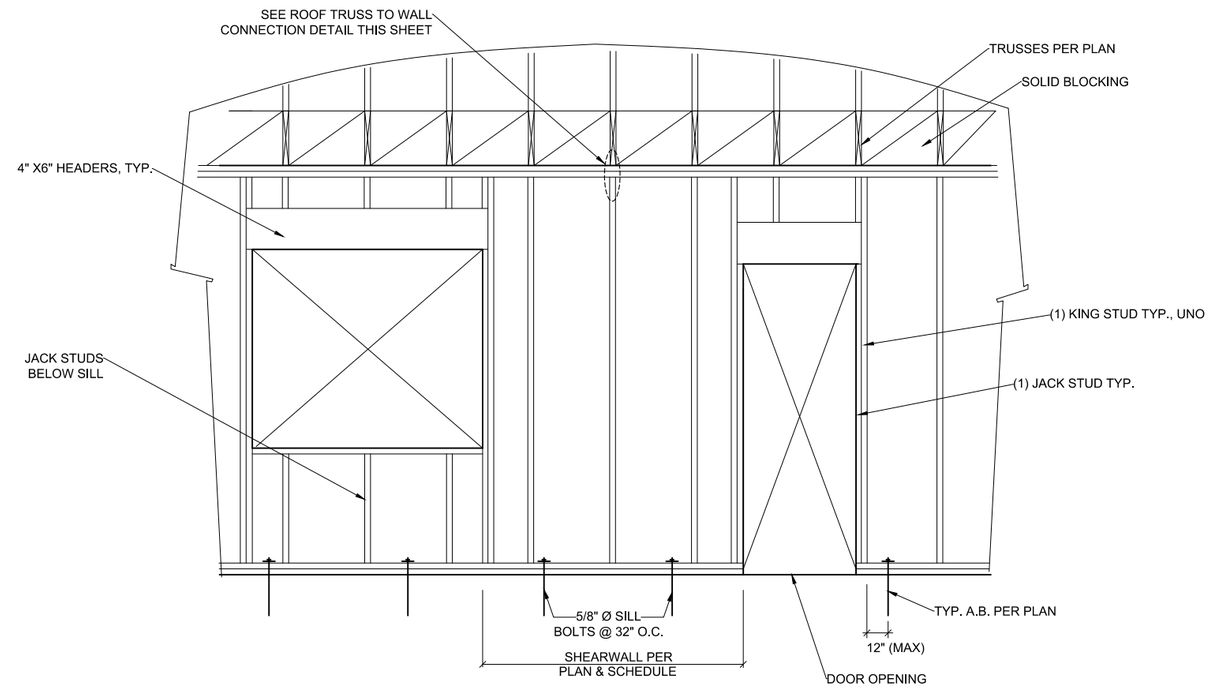

3 C206 **TYPICAL STUD FRAMING**
SCALE: NTS

FRAMING NAILING SCHEDULE

CONNECTION	NAILING	CONNECTION	NAILING
TOP PLATE TO STUD, END NAIL	2x4 (2)- 16d 2x6 (3)- 16d 1 3/4"x5 1/2" LVL (3)-16d 1 3/4"x7 1/4" LVL (4)-16d 1 3/4"x9 1/4" LVL (5)-16d 1 3/4"x11 1/4" LVL (6)-16d	TOP PLATE LAPS (4'-0" MINIMUM)	16d AT 6" O.C.
		BUILT-UP HEADERS AND BEAMS	16d AT 16" O.C. ALONG TOP AND BOTTOM EDGE
STUD TO SILL PLATE, END NAIL	2x4 (2)- 16d 2x6 (3)- 16d 1 3/4"x5 1/2" LVL (3)-16d 1 3/4"x7 1/4" LVL (4)-16d 1 3/4"x9 1/4" LVL (5)-16d 1 3/4"x11 1/4" LVL (6)-16d	BUILT-UP COLUMNS BELOW BEAMS, FACE NAIL	16d AT 16" O.C. - EACH FACE
		BUILT-UP CORNER STUDS (3 STUDS MINIMUM)	16d AT 24" O.C.
		BACKING AND BLOCKING AT TRUSSES AND 2x FRAMING, END NAIL OR TOE NAIL	(2)- 16d EACH END
DOUBLE SILL PLATES, FACE NAIL (STAGGER)	10d AT 12" O.C.		
DOUBLE STUDS, FACE NAIL (STAGGER)	10d AT 12" O.C. - EACH FACE	BACKING AND BLOCKING AT I-JOIST FRAMING	SIMPSON Z2 OR EQUAL AT EACH END [W/(4)-10dx1 1/2" NAILS]
DOUBLE TOP PLATES, FACE NAIL	16d AT 24" O.C.		
TOP PLATES AT WALL INTERSECTIONS, FACE NAIL	(2)- 16d		

P:\2020\20098JN-Bicknell_Delta\CC2001cns\20098JN.dwg PLOT: December 03, 2020 at 3:59pm Micki Minsch

DESIGN MSM
DRAWN MSM
CHECK JMP
APPROVED JMP
FILE:

No.	DATE	REVISION	BY	APRVD.

DELTA DRIVE SUBDIVISION
JUNEAU, AK

BICKNELL INC. QUALITY CONSTRUCTION

STATE OF ALASKA 49TH Joseph M. Pusich CE 8152 REGISTERED PROFESSIONAL ENGINEER 12/03/20

PDC ENGINEERS
PLAN • DESIGN • CONSTRUCT
A BESPEC COMPANY
9360 Glacier Hwy, Suite A, Juneau, AK 99801
907.780.6060 | AECC605

WATER METER ENCLOSURE DETAILS

DATE: Dec 03, 2020
PDC No. 20098JN
SHEET C206

Attachment E ARP2020 0001 Preliminary APS Plan Notice of Decision and Staff Report

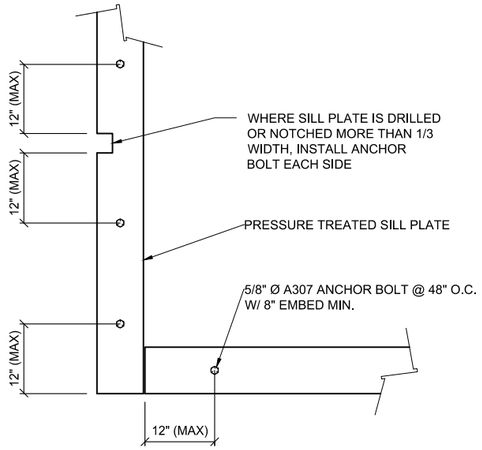

1 C207 **SILL PLATE BOLTING TO CONCRETE**
SCALE: NTS

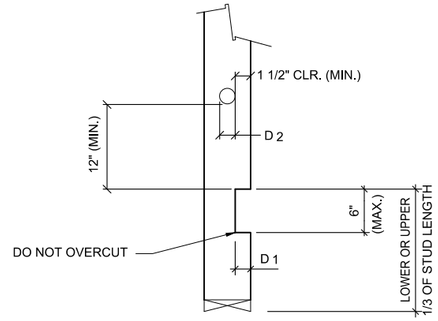

BEARING WALLS		
STUD SIZE	MAX. D 1 (NOTCH)	MAX. D 2 (HOLE)
2x6	1 1/4"	1 1/2"

2 C207 **ALLOWABLE HOLES AND NOTCHES IN STUDS**
SCALE: NTS

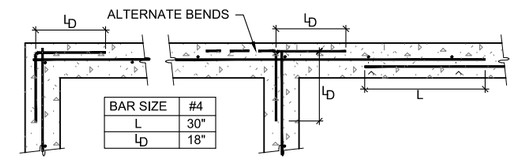

BAR SIZE	#4
L	30"
L_D	18"

SINGLE CURTAIN @ STEM WALLS

3 C207 **WALL & FOOTING REINFORCING AT CORNERS & INTERSECTIONS**
SCALE: NTS

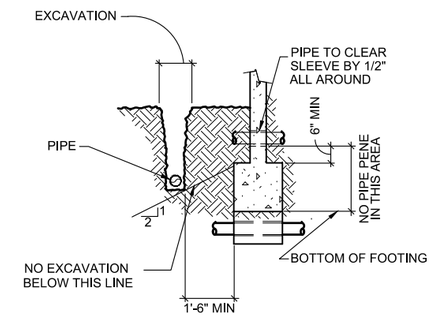

FOOTING SECTION

4 C207 **PIPES & TRENCHES AT FOUNDATIONS**
SCALE: NTS

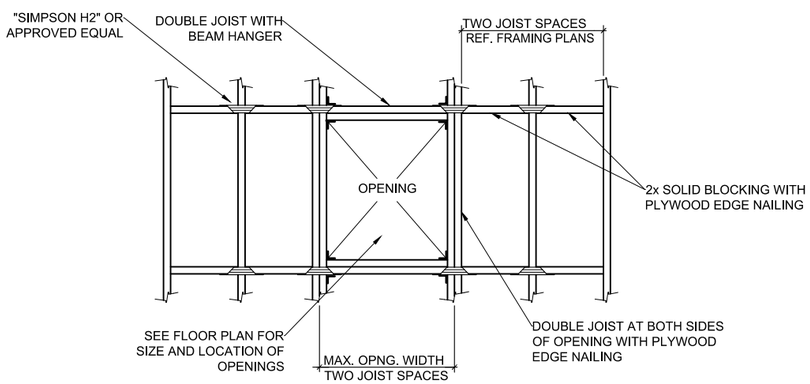

5 C207 **TYP. OPENINGS IN FLOORS AND ROOF**
SCALE: NTS

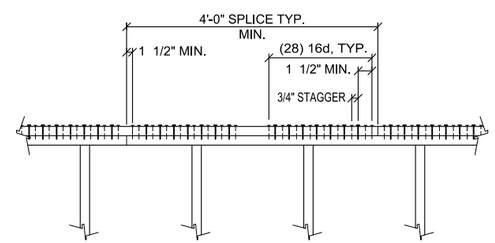

NAILED SPLICE

NOTES:

1. MINIMUM PLATE SPLICE IS (28) 16d EA. SIDE OF EA. PLATE JOINT. MSTC78 IS ALTERNATE.
2. STAGGER NAILS IN 2 ROWS.
3. OCCURS AT TOP PLATES UNDER ROOF.

6 C207 **TYPICAL PLATE SPICE**
SCALE: NTS

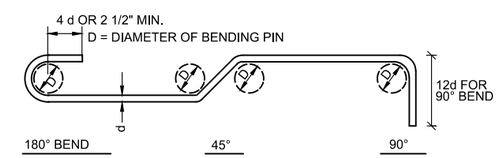

BAR SIZE	MIN. PIN DIA.
#3 THRU #8	6 BAR DIA.

LEGEND (FOR REINF. BENDS NOT SHOWN TO SCALE)

- DENOTES 90° BEND IN THE PLANE OF THE DWG.
- DENOTES 90° BEND PERPENDICULAR TO THE PLANE OF THE DWG.
- DENOTES BEND PERPENDICULAR TO THE PLANE OF THE DWG.
- DENOTES BEND IN THE PLANE OF THE DWG.
- DENOTES OFFSET IN THE PLANE OF THE DWG.

7 C207 **STANDARD HOOKS AND BENDS**
SCALE: NTS

P:\2020\20098JN-Bicknell_Delta\CIC2001\cnst20098JN.dwg PLOT: December 03, 2020 at: 3:59pm Micki.Minsch

DESIGN MSM
DRAWN MSM
CHECK JMP
APPROVED JMP
FILE:

No.	DATE	REVISION	BY	APRVD.

DELTA DRIVE SUBDIVISION
JUNEAU, ALASKA

BICKNELL INC. QUALITY CONSTRUCTION

STATE OF ALASKA 49TH Joseph M. Pusich CE 8152 PROFESSIONAL ENGINEER 12/03/20

PDC ENGINEERS
PLAN • DESIGN • CONSTRUCT
A RESPEC COMPANY
5960 Lucas Drive, Juneau, Alaska 99801
907.780.6060 | AECC605

WATER METER ENCLOSURE DETAILS

DATE: Dec 03, 2020
PDC No. 20098JN
SHEET C207

ESCP LEGEND

STRAW WATTLE

SILT SACK BMP

TEMPORARY ROCK ACCESS

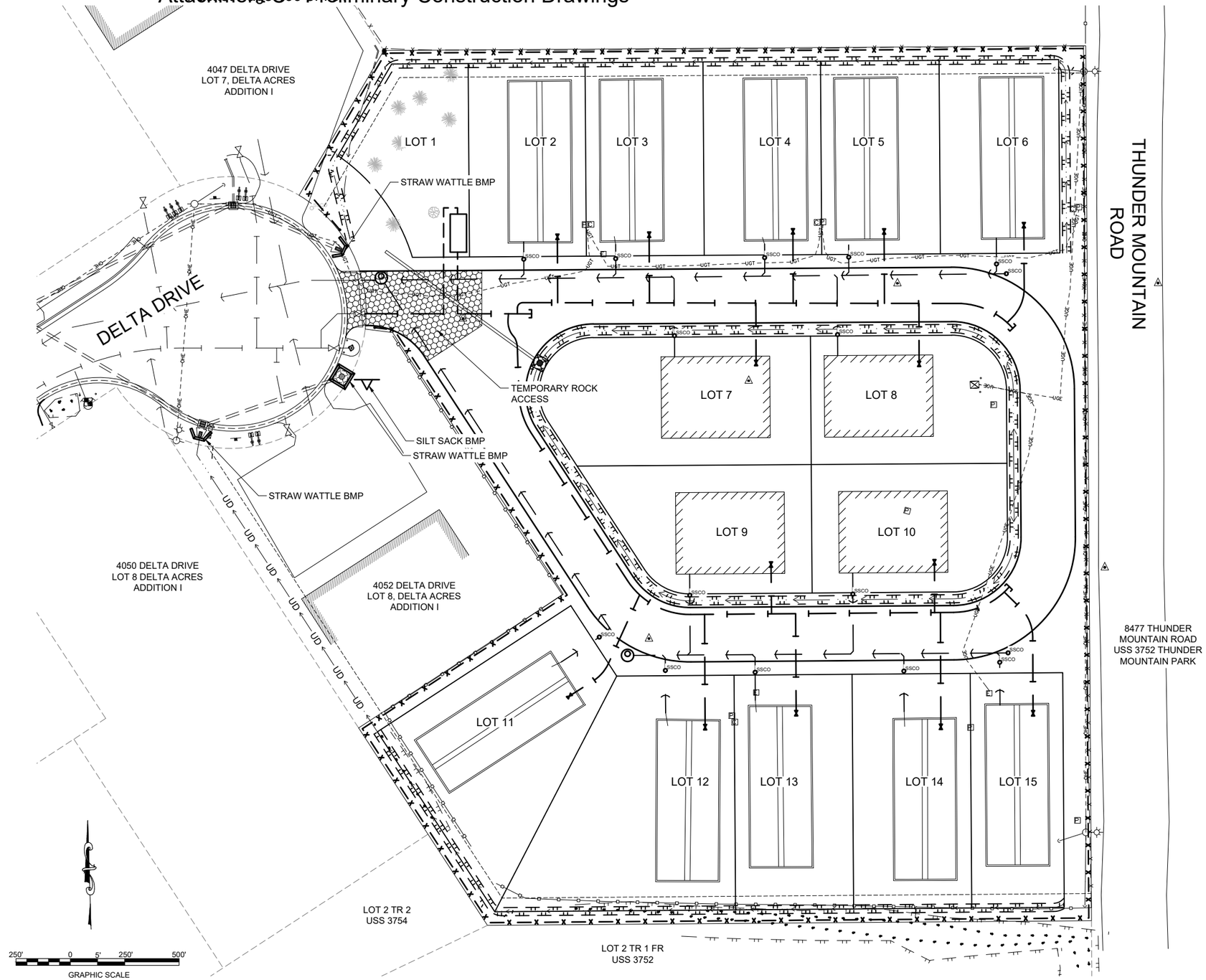

P:\2020\20098JN-Bicknell_Delta\CIC601\ms\20098JN.dwg PLOT: December 03, 2020 at: 4:00pm Micki Minsch

DESIGN	MSM
DRAWN	MSM
CHECK	JMP
APPROVED	JMP
FILE:	

No.	DATE	REVISION	BY	APRVD.

DELTA DRIVE SUBDIVISION

JUNEAU, ALASKA

BICKNELL INC. QUALITY CONSTRUCTION

STATE OF ALASKA 749TH Joseph M. Pusich CE 8152 REGISTERED PROFESSIONAL ENGINEER 12/03/20

PDC ENGINEERS
PLAN • DESIGN • CONSTRUCT
A BESPEC COMPANY
550 Bennett Drive, Juneau, Alaska
907.780.6060 | AECC605

EROSION & SEDIMENT CONTROL PLAN

DATE: Dec 03, 2020
PDC No. 20098JN

SHEET
C300

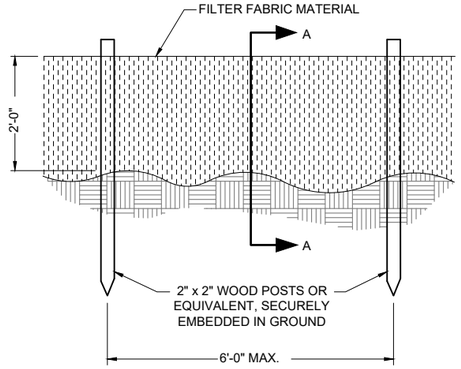

ELEVATION VIEW

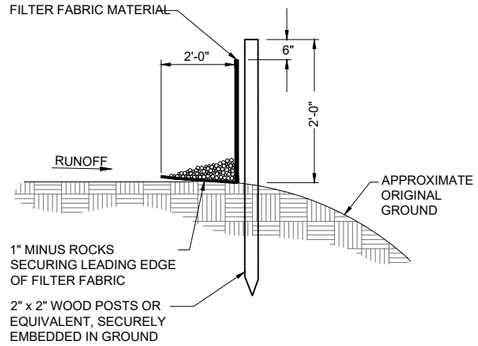

SECTION "A-A"

1 / C301 SILT FENCE DETAIL

SCALE: NTS

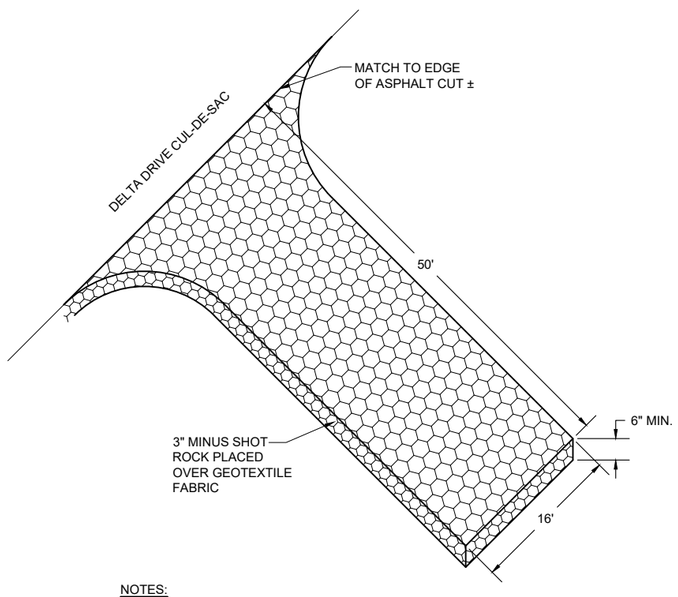

NOTES:
1. MAINTENANCE OF TEMPORARY ROCK ACCESS SHALL INCLUDE REPLACING ROCK AS REQUIRED TO MAINTAIN AN EFFECTIVE AREA FOR SHEDDING EARTHEN MATERIAL FROM CONSTRUCTION EQUIPMENT AND PREVENTING MATERIAL FROM GETTING TRACKED ON TO DELTA DRIVE.

2. CLEAN AND REMOVE ALL TRACKED MATERIAL (MUD, SILT, DEBRIS, ETC.) OFF OF THE PROJECT SITE DAILY AND DISPOSE OF MATERIAL AT AN APPROVED DISPOSAL LOCATION.

3. TEMPORARY ROCK ACCESS APPROACHES SHALL BE INSTALLED AS SHOWN ON THE EROSION AND SEDIMENT CONTROL PLAN OR AS DIRECTED BY THE ENGINEER.

3 / C301 TEMPORARY ROCK ACCESS

SCALE: NTS

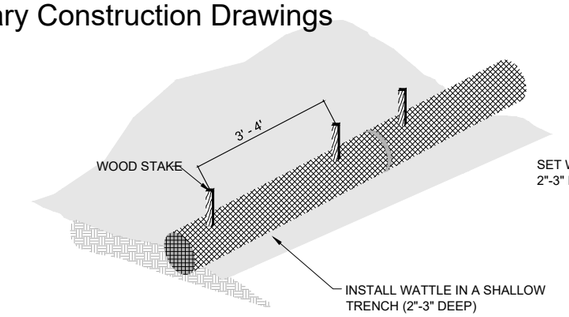

TYPICAL WATTLE ELEVATION VIEW

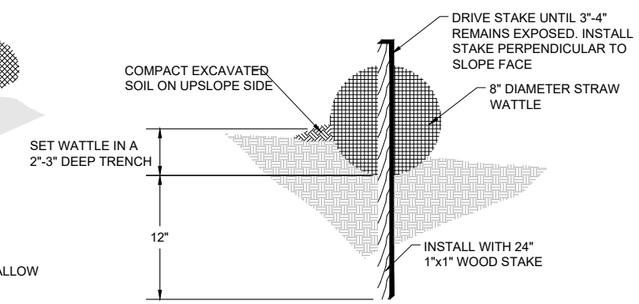

WATTLE ENTRENCHMENT

WATTLE NOTES:
1. BEGIN AT THE LOCATION WHERE THE WATTLE IS TO BE INSTALLED BY EXCAVATING A 2"-3" DEEP x 9" WIDE TRENCH ALONG THE CONTOUR OF THE SLOPE. EXCAVATED SOIL SHOULD BE PLACED UP-SLOPE FROM THE ANCHOR TRENCH.

2. PLACE THE WATTLE IN THE TRENCH SO THAT IT CONTOURS TO THE SOIL SURFACE. COMPACT SOIL FROM THE EXCAVATED TRENCH AGAINST THE WATTLE ON THE UPHILL SIDE. ADJACENT WATTLES SHOULD TIGHTLY ABUT EACH OTHER.

3. SECURE THE WATTLE WITH 24" STAKES EVERY 3-4' AND WITH A STAKE ON EACH END. STAKES SHOULD BE DRIVEN THROUGH THE MIDDLE OF THE WATTLE LEAVING AT LEAST 3-4" OF STAKE EXTENDING ABOVE THE WATTLE. STAKES SHOULD BE DRIVEN PERPENDICULAR TO SLOPE FACE.

2 / C301 STRAW WATTLE IN GROUND DETAIL

SCALE: NTS

EROSION AND SEDIMENT CONTROL NOTES:
1. EROSION AND SEDIMENT CONTROL PLANS (E.S.C.P.) SHOWN ARE INTENDED AS A MINIMUM LEVEL OF EROSION CONTROL ONLY. THE E.S.C.P. IS TO BE USED BY THE CONTRACTOR TO DEVELOP A SITE SPECIFIC STORM WATER POLLUTION PREVENTION PLAN (SWPPP). ALL SEDIMENTATION FROM ON SITE DRAINAGE AND GRADING SHALL BE CONTAINED ON SITE. THE CONTRACTOR IS SOLELY RESPONSIBLE FOR DAMAGE TO ADJACENT PROPERTIES AND STREAMS FROM CONSTRUCTION RELATED EROSION AND SILTATION DURING THE COURSE OF WORK. ANY DAMAGE RESULTING FROM SUCH EROSION AND SILTATION SHALL BE CORRECTED AT THE EXPENSE OF THE CONTRACTOR.

2. ALL EROSION CONTROL/SEDIMENTATION CONTROL BARRIERS SHALL BE IN PLACE PRIOR TO COMMENCING EXCAVATION OR FILLING OPERATIONS.

3. TEMPORARY EROSION CONTROL SYSTEM WILL NOT BE REMOVED UNTIL GERMINATION OF SEEDING AND NO EROSION/SEDIMENT PROBLEMS EXIST.

4. COLLECTED SEDIMENT WILL BE DISPOSED OF OFF SITE AT AN EXISTING APPROVED DUMPSITE. COLLECTED SEDIMENT MAY NOT BE USED AS EMBANKMENT.

5. DEWATERING OF WORK AREAS BY PUMPING SHALL BE IMPLEMENTED TO REDUCE THE PROJECTS WATER QUALITY IMPACTS. THE PUMP DISCHARGE NEEDS TO BE FILTERED THROUGH SEDIMENT CONTROL DEVICES SUCH AS "DIRTBAG" OR SEDIMENT CONTROL STRUCTURES BEFORE IT CAN ENTER FISH HABITATS AT ANY POINT.

6. CONTRACTOR SHALL KEEP CLEAN AND DISPOSE OF ALL EARTHEN MATERIAL TRACKED ONTO DELTA DRIVE. THIS SHALL INCLUDE SWEEPING WITH POWER BROOM, VACUUMING AND WATERING ON A DAILY BASIS DURING HAULING ACTIVITY OR MORE FREQUENTLY AS DIRECTED BY THE ENGINEER.

P:\2020\20098JN-Bicknell_Delta\C\C600\cns\20098JN.dwg PLOT: December 03, 2020 at: 4:00pm Micki.Minsch

DESIGN MSM
DRAWN MSM
CHECK JMP
APPROVED JMP
FILE:

No.	DATE	REVISION	BY	APRVD.

DELTA DRIVE SUBDIVISION
JUNEAU, ALASKA

BICKNELL INC. QUALITY CONSTRUCTION

STATE OF ALASKA 49TH Joseph M. Pusich CE 8152 PROFESSIONAL ENGINEER 12/03/20

PDC ENGINEERS
PLAN • DESIGN • CONSTRUCT
A RESPEC COMPANY
9360 Glacier Hwy, Suite 201, Juneau, AK 99801
907.780.6060 | AECC605

EROSION & SEDIMENT CONTROL DETAILS

DATE: Dec 03, 2020
PDC No. 20098JN

SHEET
C301

PDC ENGINEERS

PLAN DESIGN CONSTRUCT

TECHNICAL MEMORANDUM

Client #	Bicknell Inc.	**Date**	10/2/2020
PDC #	20098JN	**Prepared by**	Sean Kelly, EIT
Project Name	Delta Drive Subdivision	**Reviewed by**	Mark Pusich, PE
Subject	Delta Drive Subdivision – Water Main Branch Sizing Memo		

Topic	Discussion
Introduction	Bicknell Inc. is the owner of Delta Drive subdivision and is proposing the replacement of a water main servicing the subdivisions lots. The subdivision includes 15 lots, 14 of which will have single family structures installed on the lots. The proposed water main installation will involve connecting a water submain off of the new 8" HDPE water line.
Existing Conditions	The existing subdivision includes 10 modular homes on concrete foundations with buildings previously removed. The inner island of the subdivision has four lots that have been recently cleared. The existing homes were served with ¾" water lines from the 2" main.
Peak Design Flow	The Delta Drive Subdivision is not a new development and is residential, so the flow design is straight forward. Testing data from the CBJ fire hydrant located at the cul-de-sac entrance of the subdivision was provided by the CBJ Water Department. Fixture count and pipe sizes were determined with the 2012 Uniform Plumbing Code, IAPMO/ANSI UPC1-2012.
Assumptions	For the design of the water main servicing the Delta Drive Subdivision several assumptions were made. The following are the assumptions made for this design: • Each home has two bathrooms which include shower with tub, sink and toilet. • Each home has a washing machine. • Each home has one hose bib. • Each home has a kitchen sink.
Fixture Count & Pipe Sizing	From the 2012 Uniform Plumbing Code, the following fixture counts (FC) were obtained from table 610.3 (attached) for private units:

Topic	Discussion
	• Lavatory (x2) – 2.0 FC • Water Closet, 1.6 GPF Gravity Tank (x2) – 5.0 FC • Bathtub or Combination Bath/Shower (x2) – 8.0 FC • Clothes Washer – 4.0 FC • Kitchen, domestic with or without dishwasher – 1.5 FC • Hose Bibb – 2.5 These fixtures bring the total fixture count per residential unit to 23 FC. The available static pressure is 64 psi, provided by CBJ, at Delta Drive fire hydrant. The longest line necessary from the tee off of the 8" line is 250'. Due to the configuration of the water main having two branches off of the 8" water main, the total fixture count is determined with seven units instead of the total 14. Total fixture count (TFC) for seven units is as follows, $$TFC = \left(\frac{23\ FC}{UNIT}\right) * 7\ UNITS = 161\ FC$$
Design Recommendation	Using Table 610.4 from the 2012 Uniform Plumbing Code (attached), the minimum pipe size for the water branches is two-inch pipe. It is recommended that two-inch pipe be used for the water main servicing the Delta Drive Subdivision.

TABLE 610.3
WATER SUPPLY FIXTURE UNITS (WSFU) AND MINIMUM FIXTURE BRANCH PIPE SIZES[3]

APPLIANCES, APPURTENANCES OR FIXTURES[2]	MINIMUM FIXTURE BRANCH PIPE SIZE[1,4] (Inches)	PRIVATE	PUBLIC	ASSEMBLY[6]
Bathtub or Combination Bath/Shower (fill)	½	4.0	4.0	—
¾ inch Bathtub Fill Valve	¾	10.0	10.0	—
Bidet	½	1.0	—	—
Clothes Washer	½	4.0	4.0	—
Dental Unit, cuspidor	½	—	1.0	—
Dishwasher, domestic	½	1.5	1.5	—
Drinking Fountain or Water Cooler	½	0.5	0.5	0.75
Hose Bibb	½	2.5	2.5	—
Hose Bibb, each additional[8]	½	1.0	1.0	—
Lavatory	½	1.0	1.0	1.0
Lawn Sprinkler, each head[5]	—	1.0	1.0	—
Mobile Home, each (minimum)	—	12.0	—	—
Sinks	—	—	—	—
Bar	½	1.0	2.0	—
Clinic Faucet	½	—	3.0	—
Clinic Flushometer Valve with or without faucet	1	—	8.0	—
Kitchen, domestic with or without dishwasher	½	1.5	1.5	—
Laundry	½	1.5	1.5	—
Service or Mop Basin	½	1.5	3.0	—
Washup, each set of faucets	½	—	2.0	—
Shower, per head	½	2.0	2.0	—
Urinal, 1.0 GPF Flushometer Valve	¾	See Footnote[7]		—
Urinal, greater than 1.0 GPF Flushometer Valve	¾	See Footnote[7]		—
Urinal, flush tank	½	2.0	2.0	3.0
Wash Fountain, circular spray	¾	—	4.0	—
Water Closet, 1.6 GPF Gravity Tank	½	2.5	2.5	3.5
Water Closet, 1.6 GPF Flushometer Tank	½	2.5	2.5	3.5
Water Closet, 1.6 GPF Flushometer Valve	1	See Footnote[7]		—
Water Closet, greater than 1.6 GPF Gravity Tank	½	3.0	5.5	7.0
Water Closet, greater than 1.6 GPF Flushometer Valve	1	See Footnote[7]		—

For SI units: 1 inch = 25 mm

Notes:

1 Size of the cold branch pipe, or both the hot and cold branch pipes.

2 Appliances, appurtenances, or fixtures not referenced in this table shall be permitted to be sized by reference to fixtures having a similar flow rate and frequency of use.

3 The listed fixture unit values represent their load on the cold water building supply. The separate cold water and hot water fixture unit value for fixtures having both hot and cold water connections shall be permitted to be each taken as three-quarter of the listed total value of the fixture.

4 The listed minimum supply branch pipe sizes for individual fixtures are the nominal (I.D.) pipe size.

5 For fixtures or supply connections likely to impose continuous flow demands, determine the required flow in gallons per minute (gpm) (L/s), and add it separately to the demand in gpm (L/s) for the distribution system or portions thereof.

6 Assembly [Public Use (See Table 422.1)].

7 Where sizing flushometer systems, see Section 610.10.

8 Reduced fixture unit loading for additional hose bibbs is to be used where sizing total building demand and for pipe sizing where more than one hose bibb is supplied by a segment of water distribution pipe. The fixture branch to each hose bibb shall be sized on the basis of 2.5 fixture units.

TABLE 610.4
FIXTURE UNIT TABLE FOR DETERMINING WATER PIPE AND METER SIZES

METER AND STREET SERVICE (Inches)	BUILDING SUPPLY AND BRANCHES (Inches)	MAXIMUM ALLOWABLE LENGTH (feet)														
		40	60	80	100	150	200	250	300	400	500	600	700	800	900	1000
PRESSURE RANGE – 30 to 45 psi[1]																
¾	½[2]	6	5	4	3	2	1	1	1	0	0	0	0	0	0	0
¾	¾	16	16	14	12	9	6	5	5	4	4	3	2	2	2	1
¾	1	29	25	23	21	17	15	13	12	10	8	6	6	6	6	6
1	1	36	31	27	25	20	17	15	13	12	10	8	6	6	6	6
¾	1¼	36	33	31	28	24	23	21	19	17	16	13	12	12	11	11
1	1¼	54	47	42	38	32	28	25	23	19	17	14	12	12	11	11
1½	1¼	78	68	57	48	38	32	28	25	21	18	15	12	12	11	11
1	1½	85	84	79	65	56	48	43	38	32	28	26	22	21	20	20
1½	1½	150	124	105	91	70	57	49	45	36	31	26	23	21	20	20
2	1½	151	129	129	110	80	64	53	46	38	32	27	23	21	20	20
1	2	85	85	85	85	85	85	82	80	66	61	57	52	49	46	43
1½	2	220	205	190	176	155	138	127	120	104	85	70	61	57	54	51
2	2	370	327	292	265	217	185	164	147	124	96	70	61	57	54	51
2	2½	445	418	390	370	330	300	280	265	240	220	198	175	158	143	133
PRESSURE RANGE – 46 to 60 psi[1]																
¾	½[2]	7	7	6	5	4	3	2	2	1	1	1	0	0	0	0
¾	¾	20	20	19	17	14	11	9	8	6	5	4	4	3	3	3
¾	1	39	39	36	33	28	23	21	19	17	14	12	10	9	8	8
1	1	39	39	39	36	30	25	23	20	18	15	12	10	9	8	8
¾	1¼	39	39	39	39	39	39	34	32	27	25	22	19	19	17	16
1	1¼	78	78	76	67	52	44	39	36	30	27	24	20	19	17	16
1½	1¼	78	78	78	78	66	52	44	39	33	29	24	20	19	17	16
1	1½	85	85	85	85	85	85	80	67	55	49	41	37	34	32	30
1½	1½	151	151	151	151	128	105	90	78	62	52	42	38	35	32	30
2	1½	151	151	151	151	150	117	98	84	67	55	42	38	35	32	30
1	2	85	85	85	85	85	85	85	85	85	85	85	85	85	83	80
1½	2	370	370	340	318	272	240	220	198	170	150	135	123	110	102	94
2	2	370	370	370	370	368	318	280	250	205	165	142	123	110	102	94
2	2½	654	640	610	580	535	500	470	440	400	365	335	315	285	267	250
PRESSURE RANGE – Over 60 psi[1]																
¾	½[2]	7	7	7	6	5	4	3	3	2	1	1	1	1	1	0
¾	¾	20	20	20	20	17	13	11	10	8	7	6	6	5	4	4
¾	1	39	39	39	39	35	30	27	24	21	17	14	13	12	12	11
1	1	39	39	39	39	38	32	29	26	22	18	14	13	12	12	11
¾	1¼	39	39	39	39	39	39	39	39	34	28	26	25	23	22	21
1	1¼	78	78	78	78	74	62	53	47	39	31	26	25	23	22	21
1½	1¼	78	78	78	78	78	74	65	54	43	34	26	25	23	22	21
1	1½	85	85	85	85	85	85	85	85	81	64	51	48	46	43	40
1½	1½	151	151	151	151	151	151	130	113	88	73	51	51	46	43	40
2	1½	151	151	151	151	151	151	142	122	98	82	64	51	46	43	40
1	2	85	85	85	85	85	85	85	85	85	85	85	85	85	85	85
1½	2	370	370	370	370	360	335	305	282	244	212	187	172	153	141	129
2	2	370	370	370	370	370	370	370	340	288	245	204	172	153	141	129
2	2½	654	654	654	654	654	650	610	570	510	460	430	404	380	356	329

For SI units: 1 inch = 25 mm, 1 foot = 304.8 mm, 1 pound-force per square inch = 6.8947 kPa

Notes:

[1] Available static pressure after head loss.

[2] Building supply, not less than ¾ of an inch (20 mm) nominal size.

From: Loni VanKirk <Loni.VanKirk@juneau.org>
Sent: Monday, September 28, 2020 8:18 AM
To: Kevin Puustinen <KevinPuustinen@pdceng.com>
Subject: RE: Hydrant Test Data - Delta Drive

CAUTION: This email originated from outside of the organization. Exercise caution when viewing attachments, clicking links, or responding to requests.

ACROSS FROM 4045 DELTA DR.	MUELLER	WET	64	1110/48	8/13/2019

Kevin,

Here is the Data you requested.

Static PSI Flow/residual PSI

Loni Van Kirk
Distribution Senior Operator
CBJ Water Utility
907-723-4975

From: Kevin Puustinen <KevinPuustinen@pdceng.com>
Sent: Wednesday, September 23, 2020 10:06 AM
To: Loni VanKirk <Loni.VanKirk@juneau.org>
Subject: Hydrant Test Data - Delta Drive

EXTERNAL E-MAIL: BE CAUTIOUS WHEN OPENING FILES OR FOLLOWING LINKS

Hi Loni – Can you please send me your most recent test data for the hydrant in the cul-de-sac on Delta Drive?

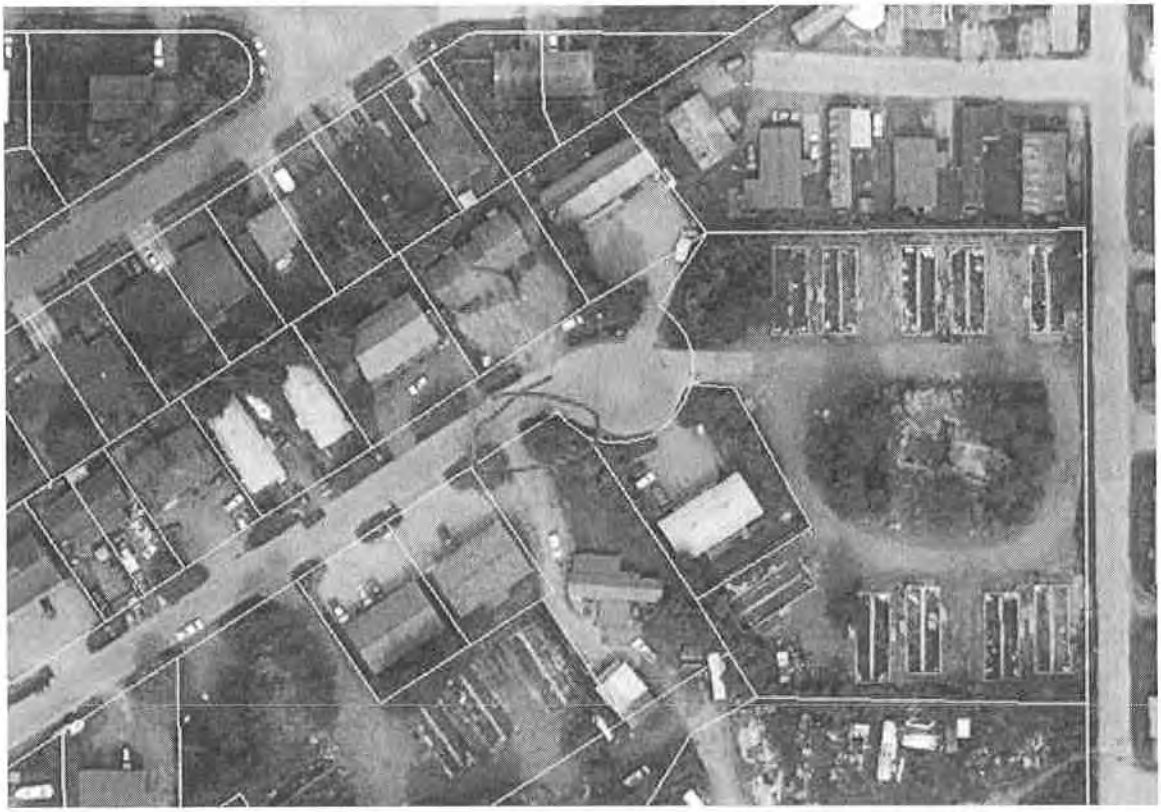

Thanks,

Kevin Puustinen, PE
Civil Engineer

PDC ENGINEERS
A RESPEC COMPANY

9109 Mendenhall Mall Rd. Ste 4, Juneau, Alaska 99801 | 907.780.6060
Facebook | LinkedIn | Twitter | www.pdceng.com

Transforming Challenges into Solutions

Anchorage | Fairbanks | Juneau | Palmer | Soldotna

Confidentiality Notice: This E-mail and any attachments is covered by the Electronic Communications Privacy Act, 18 U.S.C. & 2510-2524, is confidential and may be legally privileged. If you are not the intended recipient, you are hereby notified that any retention, dissemination, or copying of this communication is strictly prohibited. Please reply to the sender that you have received the message in error, and permanently delete the original and destroy any copy, including printed copies of this email and any attachments thereto.

DRAINAGE REPORT
FOR
DELTA DRIVE SUBDIVISION
JUNEAU, ALASKA

Prepared For:

Bicknell Development
2275 Brandy Lane, Suite 1
Juneau, AK 99801

Prepared By:

PDC Engineers
9109 Mendenhall Mall Road Suite 4
Juneau, AK 99801

Date: November 20, 2020
PDC Project No. 20098JN

1.0 PROJECT OVERVIEW

1.1 Project Description

Bicknell Inc., is proposing to redevelop an existing residential property. The project is located off the cul-de-sac at the end of Delta Drive. The property previously had 10 double wide mobile homes and a structure in the center of the property. The mobile homes and the center structure have been removed and the mobile home concrete foundations remain. The property has been divided into 15 lots. Lot 1 is the parent lot, lots 2 through 6 make up the northern lots. The center of the property has been divided into four lots to create lots 7 through 10. Lots 11 through 15 make up the southern lots.

1.2 Project Duration

The developer (Bicknell) will begin construction in the spring of 2021. The subdivision development is anticipated to occur over a period of approximately 3 months.

2.0 SOIL INFORMATION

Soil conditions present in the project area consists of a vegetated surface layer underlain by a soil matrix of sand, gravels and silt material. The ground water is located approximately 3 feet below the surface as confirmed by excavated test pits. The project area is fairly flat.

3.0 STORM WATER SYSTEM

Currently drainage leaves the site through a 12” CMP culvert located at the end of Delta Drive on the northeast side of the cul-de-sac.

The storm water system along Delta Drive has been proposed to be upgraded per CBJ Contract BE21-028 “Delta Drive Reconstruction.” Work is scheduled for spring/summer 2021. For the purpose of this report, the proposed culverts for Delta Drive Reconstruction were used for the analysis of the Delta Drive Subdivision project site.

Drainage from the proposed Delta Drive Subdivision project site will be discharged into the Delta Drive storm water system at three locations, the 12” CPP ditch culvert (Pipe P-1) on the northeast side of the Delta Drive cul-de-sac, the 12” CPP culvert (Pipe P-3) at the area drain on the southeast side of the cul-de-sac, and a 12” CPP ditch culvert (Pipe P-4) located on the southwestern side of the cul-de-sac where it meets the 10’ drainage easement.

A drainage swale along the northern perimeter of the proposed project area will be

graded at 1.0% from the east to the west to then discharge in to Pipe P-1 at the northeast side of the Delta Drive cul-de-sac. Drainage from the swale around lots 7 through 10 will drain into a Type III catch basin where it will then flow through a 12" CPP pipe (Pipe P-2) to a ditch where it will leave the site through Pipe P-1 at the northeast side of the Delta Drive cul-de-sac.

A drainage swale along the southern perimeter of the proposed project area will be graded at 1.0% from east to west to an underdrain that runs along a 10' drainage easement to Pipe P-4 at the southwestern side of the Delta Drive cul-de-sac.

All of the discharge from the site would then meet at a catch basin on Delta Drive where it will be discharge through an 18" CPP culvert (Pipe P-5) to continue through the storm system.

Storm drain structures and piping would follow CBJ Standard Specifications and Standard Drawings for the development.

3.0 SITE RUNOFF CALCULATION METHOD:

A total of four catchment areas were analyzed representing the existing and proposed drainage conveyance systems relevant to the project. The catchment areas include: The existing 12" CPP culvert (Pipe P-1) that is located at the northeastern side of the Delta Drive cul-de-sac, the proposed 12" CPP culvert (Pipe P-2) that is located on the project site near the entrance to the subdivision, the existing 12" CPP culvert (Pipe P-3) that is located on the southeastern edge of the cul-de-sac, and the existing 12" CPP culvert (Pipe P-4) at the southwestern end of the cul-de-sac.

The catchment areas were determined using the proposed design model. A delineation of the areas can be found in Appendix A.

To calculate the site runoff we have elected to use the Rational Method. The Rational Method is most appropriate for evaluating drainage basins less than 10 acres. Appendix D of the "2010 CBJ Manual of Storm Water Best Management Practices" was utilized as a guide. The calculations and supporting documentation can be found in Appendix B, C, D & E of this report.

3.1 Anticipated Site Runoff (Q):

Using the Rational Method, the amount of stormwater runoff during the 25-year storm event per catchment area was determined. See Table 1.1 for results, the calculations can be found in Appendix B.

Table 1.1 Anticipated Site Runoff (Q):	
Catchment Area	**Q (cfs)**
Pipe P-1	1.03
Pipe P-2	0.94
Pipe P-3	0.42
Pipe P-4	0.74

3.2 Conveyance/Discharge Structure Capacities:

The capacity of the existing and proposed drainage systems was calculated using the Manning's Equation to determine if proposed 25-year storm even flows could be conveyed. See Table 1.2 below for results, calculations can be found in Appendix B.

Table 1.2 Conveyance/Discharge Structure Capacities:	
Catchment Area	**Q (cfs)**
Pipe P-1	2.57
Pipe P-2	2.34
Pipe P-3	2.59
Pipe P-4	14.51
Pipe P-5	6.16

Summary

Table 1.3 below compares anticipated 25-year runoff in the proposed and existing conveyance systems to their available hydraulic capacity.

Table 1.3 Comparison			
Drainage Basin	**Anticipated Runoff Q (cfs)**	**Capacity Check**	**Available Capacity Q (cfs)**
Pipe P-1	1.12	<	2.57
Pipe P-2	0.94	<	2.34
Pipe P-3	0.42	<	2.59
Pipe P-4	0.74	<	14.51
Pipe P-5	3.13	<	6.16

In summary our analysis shows that there is enough capacity in the existing and proposed drainage structures to handle flows from the altered drainage patterns as a result of the proposed Delta Drive Subdivision improvements.

11/20/2020

J. Mark Pusich, P.E.
Principal Civil Engineer
PDC Engineers

Appendices:

A – Catchment Areas
B – Rational Method
C – Runoff Coefficient
D – Time of Concentration
E – Rainfall Intensity
F – Existing & Proposed

Appendix A
Catchment Areas

DELTA DRIVE SUBDIVISION
CONSTRUCTION IMPROVEMENT PLAN
DRAINAGE MAP

JUNEAU, ALASKA
PREPARED FOR BICKNELL, INC.

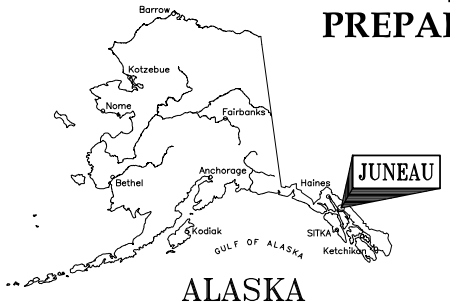

ALASKA

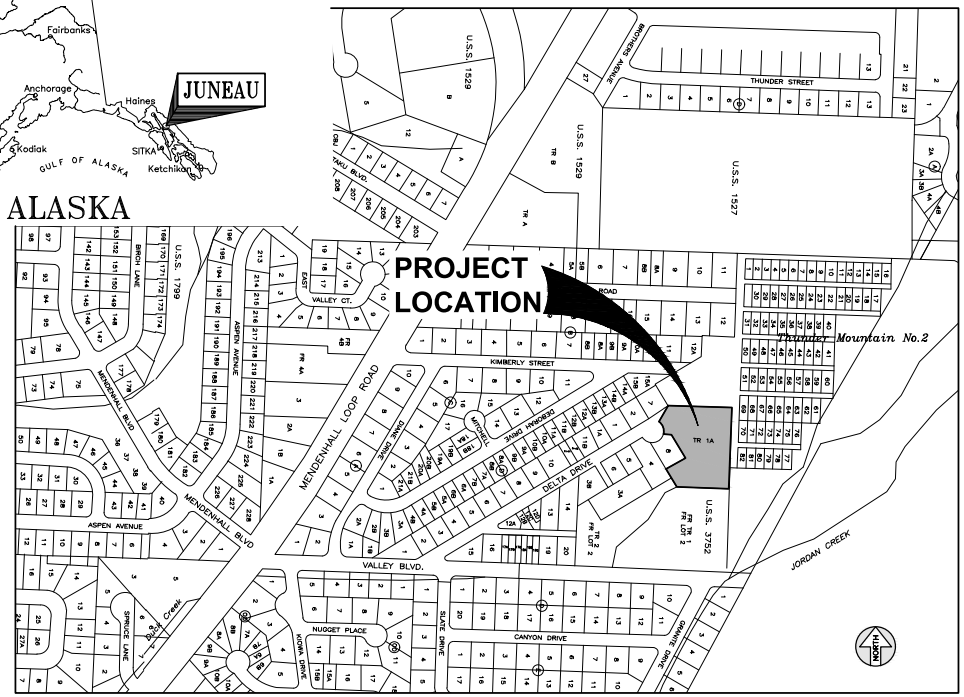

PROJECT LOCATION MAP

GRAPHIC SCALE 500' 0 250' 500' 1000'

SHEET INDEX	
SHEET No.	DESCRIPTION
1	COVER SHEET
2	P-1: EXISTING 12" CPP CULVERT
3	P-2: PROPOSED 12" CPP CULVERT
4	P-3: EXISTING 12" CPP CULVERT
5	P-4: EXISTING 12" CPP CULVERT

P:\2020\200983\Civil\Drg_Data\Drainage Map.dwg PLOT: November 20, 2020 in: 10.xlsx

DESIGN XXX
DRAWN XXX
CHECK JMP
APPROVED JMP
FILE:

No.	DATE	REVISION	BY	APRVD.

DELTA DRIVE SUBDIVISION
JUNEAU, AK

PDC ENGINEERS
PLAN • DESIGN • CONSTRUCT
A DESIGN GROUP COMPANY
9109 Mendenhall Mall Rd. Ste. 4, Juneau, AK 99801
907.780.6060 | AECC605

COVER SHEET

DATE: Nov 20, 2020
PDC No. 200983N
SHEET 1

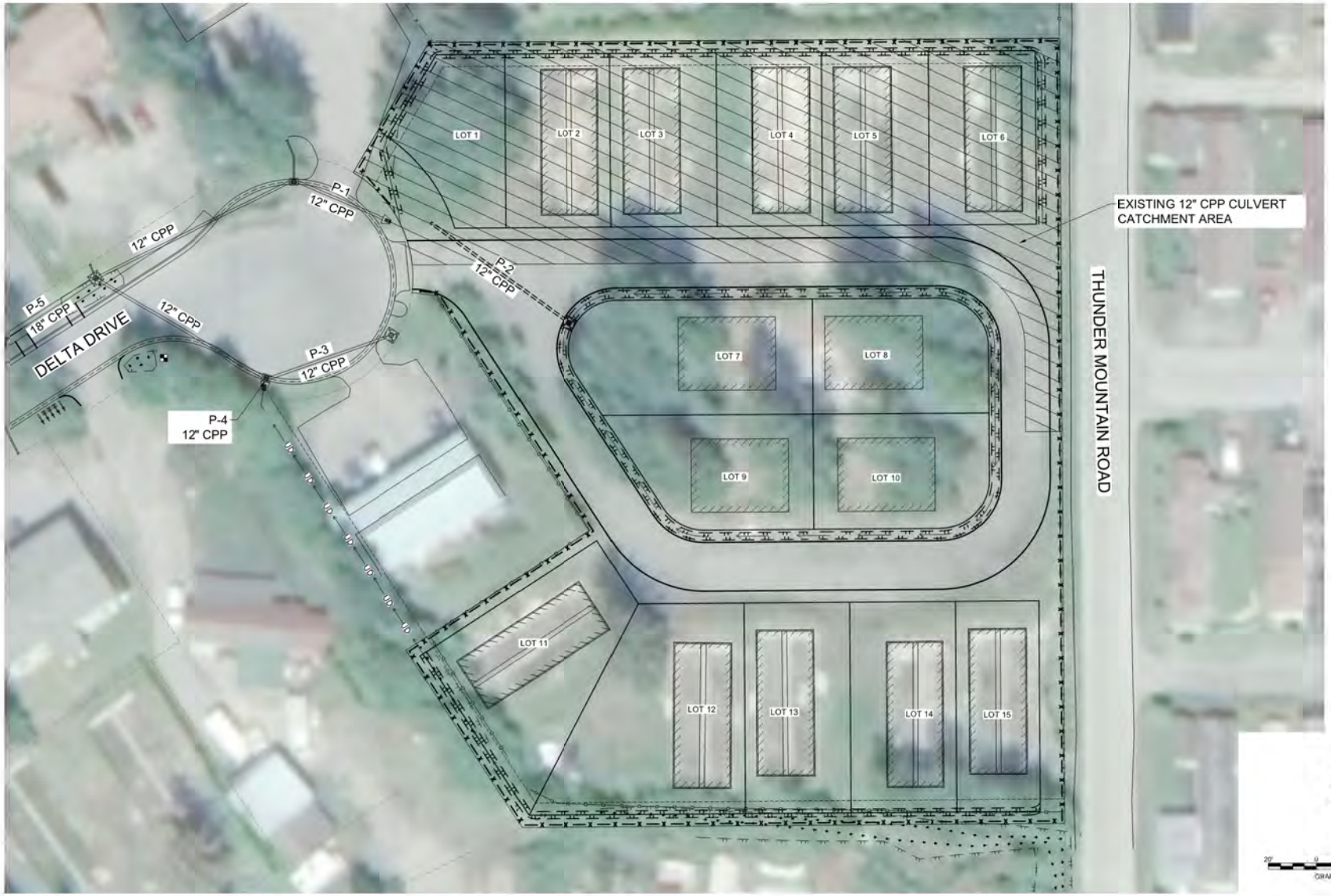

DESIGN XXX DRAWN XXX CHECK JMP APPROVED JMP FILE	No. DATE REVISION BY APRVD.	DELTA DRIVE SUBDIVISION JUNEAU, AK			PDC ENGINEERS PLAN • DESIGN • CONSTRUCT A BESPEC COMPANY 9109 Mendenhall Mall Rd. Ste. 4, Juneau, AK 99801 907.780.6060 | AECC605	P-1: EXISTING 12" CPP CULVERT CATCHMENT AREA	DATE Nov 20 PDC No 2008001 SHEET 2

DESIGN XXX
DRAWN XXX
CHECK JMP
APPROVED JMP
FILE

No	DATE	REVISION	BY	APPRO

DELTA DRIVE SUBDIVISION
JUNEAU, AK

PDC ENGINEERS
PLAN • DESIGN • CONSTRUCT
INTEGRITY SERVANT
9101 Mendenhall Mall Rd, Suite A, Juneau, AK 99801
907.780.6060 | AECOM

P-2: PROPOSED 12" CPP CULVERT CATCHMENT AREA

DATE Nov 20, 2020
PDC No 20-0000
SHEET 3

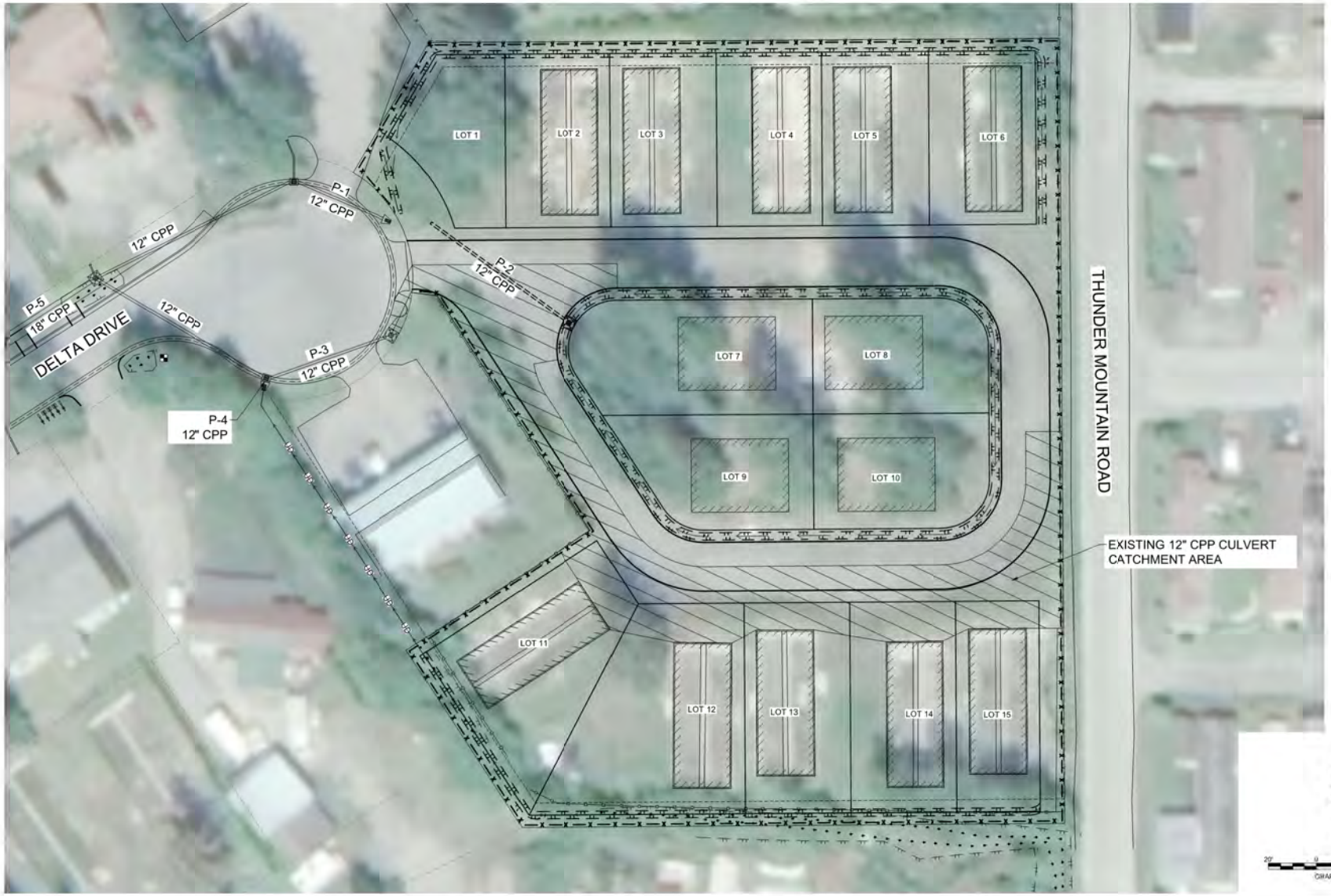

DESIGN XXX
DRAWN XXX
CHECK JMP
APPROVED JMP
FILE

No.	DATE	REVISION	BY	APRVD.

DELTA DRIVE
SUBDIVISION

JUNEAU, AK

PDC ENGINEERS
PLAN • DESIGN • CONSTRUCT
A BESPEC COMPANY
9109 Mendenhall Mall Rd. Ste. 4, Juneau, AK 99801
907.780.6060 | AECC605

P-3: EXISTING 12" CPP
CULVERT CATCHMENT AREA

DATE Nov 20
PDC No 2005001
SHEET 4

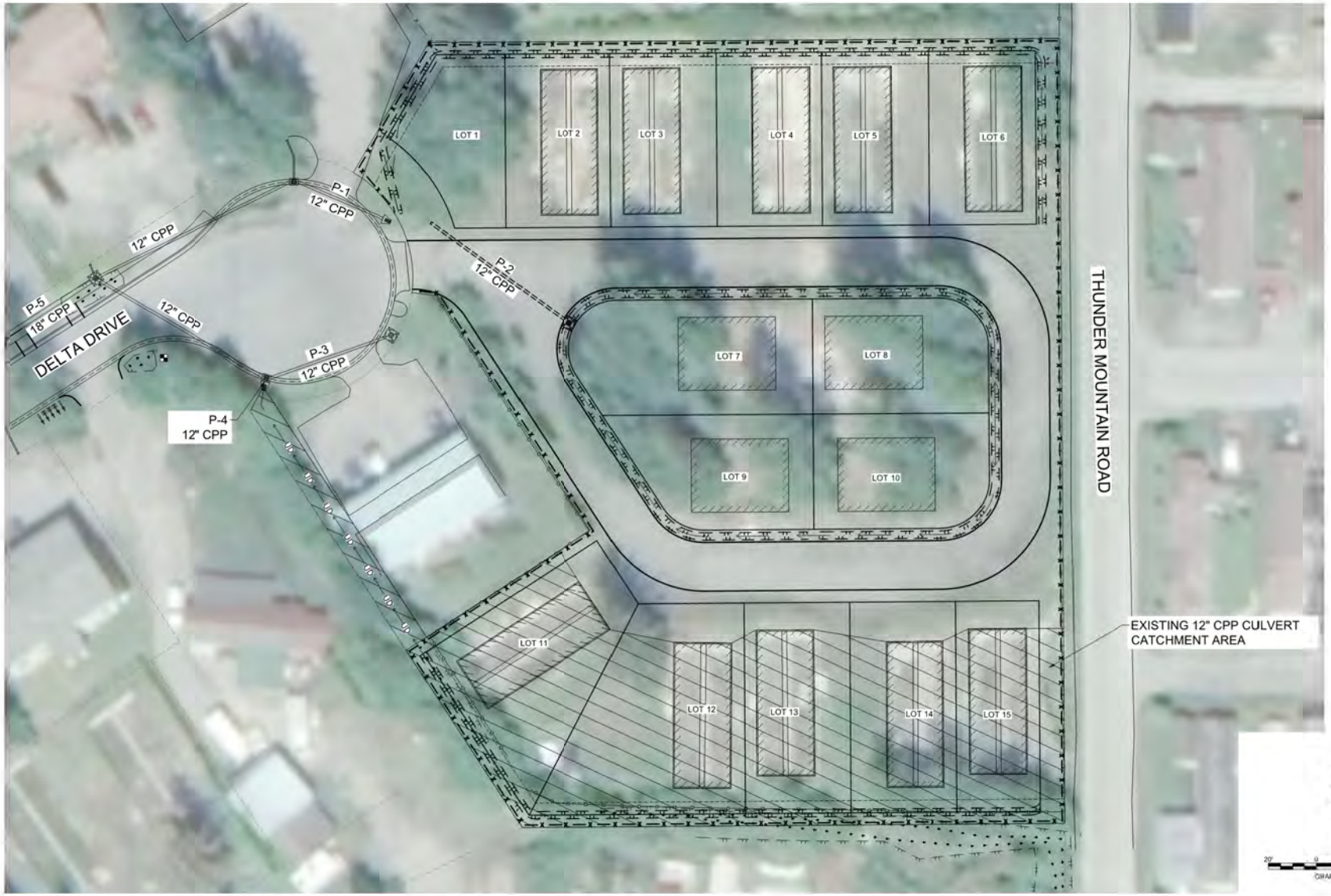

DESIGN XXX
DRAWN XXX
CHECK JMP
APPROVED JMP
FILE

No.	DATE	REVISION	BY	APRVD.

DELTA DRIVE
SUBDIVISION

JUNEAU, AK

PDC ENGINEERS
PLAN • DESIGN • CONSTRUCT
A BESPEC COMPANY
9109 Mendenhall Mall Rd. Ste. 4, Juneau, AK 99801
907.780.6060 | AECC605

P-4: EXISTING 12" CPP
CULVERT CATCHMENT AREA

DATE Nov 20
PDC No 2005001
SHEET 5

Appendix B
Rational Method

Rational Method Site Runoff Pipe P-1: Existing 12" CPP		
Project:	Delta Drive Subdivision	PDC ENGINEERS PLAN • DESIGN • CONSTRUCT A RESPEC COMPANY 9109 Mendenhall Mall Rd, Ste. 4, Juneau, AK 99801 907.780.6060 | AECC605
Owner:	Bicknell Inc.	
Date:	11/19/2020	
Prepared By:	M. Minsch	
Checked By:	M. Pusich	

$$\boldsymbol{Q = CIA}$$

Q= peak flow in cubic feet per second (cfs)
C = runoff coefficient
I = rainfall intensity (inches per hour)
A = catchment area (acres)

$$\boldsymbol{C_c = (C_1A_1 + C_2A_2)/A_t}$$

$C_c = composite\ runoff\ coefficient$
$C_{1,2} = runoff\ coefficient\ for\ each\ area\ land\ cover\ type$
$A_t = total\ area\ (acres)$
$A_{1,2} = areas\ of\ land\ cover\ (acres)$
$C_c = 0.84, see\ Appendix\ C\ for\ calculation$

$$\boldsymbol{T_c = T_1 + T_2 + \cdots + T_n}$$

$T_c = time\ of\ concentration\ (min)$
$T_{1,2} = travel\ time\ across\ separate\ flow\ path\ segments$ (min)
$T_c = 13.10\ min, see\ Appendix\ D\ for\ calculaton$

$$\boldsymbol{T_t = L/60V}$$

$T_t = travel\ time\ (min)$
$L = the\ distance\ of\ flow\ across\ a\ given\ segment\ (feet)$
$V = k_r\sqrt{S_0} = average\ velocity\ \left(\frac{feet}{\sec}\right) across\ land\ cover$
$k_r = time\ of\ concentration\ velocity\ factor\ (CBJ\ Manual\ of\ Storm\ Water\ BMP\ 2010, Table\ D-5, PG.D-10)$
$S_0 = slope\ of\ flow\ path\ (\frac{feet}{feet})$

Per CBJ Manual of Storm Water BMP 2010, Table 5-1, page 5-1, design event frequencies are specified. For driveway culvert, a 25-year storm event is the required design return period. We will base our analysis on a 25-year design return period for all drainage structures and catchment areas. Per CBJ Manual of Storm Water BMP 2010, page D-9, basins with a time and concentration 10 minutes or less shall use the 10 minute intensity. Basins with a time of concentration greater than 10 minutes and less than 30 minutes shall interpolate between the 10 and 30 minute values. Rainfall intensity for the site was sourced from the NOAA Atlas 14, Point Precipitation Frequency Estimates, see Appendix E, and is summarized as follows:

	Design Return Period
Tc 13.10 (min)	25-year
Interpolated Intensity (in/hr)=	**2.03**

Pipe P-1 is an existing 12" CPP culvert on the northeast side of the Delta Drive cul-de-sac that drains into the Delta Drive storm system at the location where the new subdivision access will tie into the shoulder of the cul-de-sac. The area that is proposed to contribute runoff to this culvert was delineated in AutoCAD.

A=26270 sqft/43,560 = 0.60 acres

	C_c	I	A		
Q (cfs)=	0.84	2.03	0.60	=	**1.03**

Rational Method Site Runoff Pipe P-2: Proposed 12" CPP		
Project:	Delta Drive Subdivision	PDC ENGINEERS PLAN • DESIGN • CONSTRUCT A RESPEC COMPANY 9109 Mendenhall Mall Rd. Ste. 4, Juneau, AK 99801 907.780.6060 | AECC605
Owner:	Bicknell Inc.	
Date:	11/19/2020	
Prepared By:	M. Minsch	
Checked By:	M. Pusich	

$$\boldsymbol{Q = CIA}$$

Q= peak flow in cubic feet per second (cfs)
C = runoff coefficient
I = rainfall intensity (inches per hour)
A = catchment area (acres)

$$\boldsymbol{C_c = (C_1A_1 + C_2A_2)/A_t}$$

$C_c = composite\ runoff\ coefficient$
$C_{1,2} = runoff\ coefficient\ for\ each\ area\ land\ cover\ type$
$A_t = total\ area\ (acres)$
$A_{1,2} = areas\ of\ land\ cover\ (acres)$
$C_c = 0.84, \quad see\ Appendix\ C\ for\ calculation$

$$\boldsymbol{T_c = T_1 + T_2 + \cdots + T_n}$$

$T_c = time\ of\ concentration\ (min)$
$T_{1,2} = travel\ time\ across\ separate\ flow\ path\ segments$ (min)
$T_c = 11.27\ min, see\ Appendix\ D\ for\ calculaton$

$$\boldsymbol{T_t = L/60V}$$

$T_t = travel\ time\ (min)$
$L = the\ distance\ of\ flow\ across\ a\ given\ segment\ (feet)$
$V = k_r\sqrt{S_0} = average\ velocity\ \left(\frac{feet}{\sec}\right) across\ land\ cover$
$k_r = time\ of\ concentration\ velocity\ factor\ (CBJ\ Manual\ of\ Storm\ Water\ BMP\ 2010, Table\ D-5, PG.D-10)$
$S_0 = slope\ of\ flow\ path\ (\frac{feet}{feet})$

Per CBJ Manual of Storm Water BMP 2010, Table 5-1, page 5-1, design event frequencies are specified. For driveway culvert, a 25-year storm event is the required design return period. We will base our analysis on a 25-year design return period for all drainage structures and catchment areas. Per CBJ Manual of Storm Water BMP 2010, page D-9, basins with a time and concentration 10 minutes or less shall use the 10 minute intensity. Basins with a time of concentration greater than 10 minutes and less than 30 minutes shall interpolate between the 10 and 30 minute values. Rainfall intensity for the site was sourced from the NOAA Atlas 14, Point Precipitation Frequency Estimates, see Appendix E, and is summarized as follows:

	Design Return Period
Tc 11.27 (min)	25-year
Interpolated Intensity (in/hr)=	**2.22**

P-2 is a proposed 12" CPP pipe is being installed to maintain the runoff from part of the subdivision access road and from proposed lots 7 through 10. Runoff will be carried down to a ditch where it will then flow into pipe P-1 and discharge into the Delta Drive storm system. The area that is proposed to contribute runoff to this culvert was delineated in AutoCAD.

A=21,736 sqft/43,560 = 0.50 acres

	C_c	I	A		
Q (cfs)=	0.84	2.22	0.50	=	**0.94**

Rational Method Site Runoff Pipe P-3: Existing 12" CPP		
Project:	Delta Drive Subdivision	PDC ENGINEERS PLAN • DESIGN • CONSTRUCT A RESPEC COMPANY 9109 Mendenhall Mall Rd. Ste. 4, Juneau, AK 99801 907.780.6060 | AECC605
Owner:	Bicknell Inc.	
Date:	11/19/2020	
Prepared By:	M. Minsch	
Checked By:	M. Pusich	

$$\boldsymbol{Q = CIA}$$

Q= peak flow in cubic feet per second (cfs)
C = runoff coefficient
I = rainfall intensity (inches per hour)
A = catchment area (acres)

$$\boldsymbol{C_c = (C_1A_1 + C_2A_2)/A_t}$$

$C_c = composite\ runoff\ coefficient$
$C_{1,2} = runoff\ coefficient\ for\ each\ area\ land\ cover\ type$
$A_t = total\ area\ (acres)$
$A_{1,2} = areas\ of\ land\ cover\ (acres)$
$C_c = 0.85, see\ Appendix\ C\ for\ calculation$

$$\boldsymbol{T_c = T_1 + T_2 + \cdots + T_n}$$

$T_c = time\ of\ concentration\ (min)$
$T_{1,2} = travel\ time\ across\ separate\ flow\ path\ segments$ (min)
$T_c = 12.93\ min, see\ Appendix\ D\ for\ calculaton$

$$\boldsymbol{T_t = L/60V}$$

$T_t = travel\ time\ (min)$
$L = the\ distance\ of\ flow\ across\ a\ given\ segment\ (feet)$
$V = k_r\sqrt{S_0} = average\ velocity\ \left(\frac{feet}{\sec}\right) across\ land\ cover$
$k_r = time\ of\ concentration\ velocity\ factor\ (CBJ\ Manual\ of\ Storm\ Water\ BMP\ 2010, Table\ D-5, PG.D-10)$
$S_0 = slope\ of\ flow\ path\ (\frac{feet}{feet})$

Per CBJ Manual of Storm Water BMP 2010, Table 5-1, page 5-1, design event frequencies are specified. For driveway culvert, a 25-year storm event is the required design return period. We will base our analysis on a 25-year design return period for all drainage structures and catchment areas. Per CBJ Manual of Storm Water BMP 2010, page D-9, basins with a time and concentration 10 minutes or less shall use the 10 minute intensity. Basins with a time of concentration greater than 10 minutes and less than 30 minutes shall interpolate between the 10 and 30 minute values. Rainfall intensity for the site was sourced from the NOAA Atlas 14, Point Precipitation Frequency Estimates, see Appendix E, and is summarized as follows:

	Design Return Period
Tc 12.93 (min)	25-year
Interpolated Intensity (in/hr)=	**2.05**

Pipe P-3 is an existing 12" CPP culvert on the southeast side of the Delta Drive cul-de-sac that drains into the Delta Drive ditch system that is near the location where the new subdivision access will tie into the shoulder of the cul-de-sac. Runoff will flow into the area drain and catch basin before flowing through the culvert. The area that is proposed to contribute runoff to this culvert was delineated in AutoCAD.

A=10,626 sqft/43,560 = 0.24 acres

	C_c	I	A		
Q (cfs)=	0.85	2.05	0.24	=	**0.42**

Rational Method Site Runoff Pipe P-4: Existing 12" CPP		
Project:	Delta Drive Subdivision	PDC ENGINEERS PLAN · DESIGN · CONSTRUCT A RESPEC COMPANY 9109 Mendenhall Mall Rd, Ste. 4, Juneau, AK 99801 907.780.6060 | AECC605
Owner:	Bicknell Inc.	
Date:	11/19/2020	
Prepared By:	M. Minsch	
Checked By:	M. Pusich	

$$\boldsymbol{Q = CIA}$$

Q= peak flow in cubic feet per second (cfs)
C = runoff coefficient
I = rainfall intensity (inches per hour)
A = catchment area (acres)

$$\boldsymbol{C_c = (C_1A_1 + C_2A_2)/A_t}$$

$C_c = composite\ runoff\ coefficient$
$C_{1,2} = runoff\ coefficient\ for\ each\ area\ land\ cover\ type$
$A_t = total\ area\ (acres)$
$A_{1,2} = areas\ of\ land\ cover\ (acres)$
$C_c = 0.83, see\ Appendix\ C\ for\ calculation$

$$\boldsymbol{T_c = T_1 + T_2 + \cdots + T_n}$$

$T_c = time\ of\ concentration\ (min)$
$T_{1,2} = travel\ time\ across\ separate\ flow\ path\ segments$ (min)
$T_c = 16.60\ min, see\ Appendix\ D\ for\ calculaton$

$$\boldsymbol{T_t = L/60V}$$

$T_t = travel\ time\ (min)$
$L = the\ distance\ of\ flow\ across\ a\ given\ segment\ (feet)$
$V = k_r\sqrt{S_0} = average\ velocity\ \left(\frac{feet}{\sec}\right) across\ land\ cover$
$k_r = time\ of\ concentration\ velocity\ factor\ (CBJ\ Manual\ of\ Storm\ Water\ BMP\ 2010, Table\ D-5, PG.D-10)$
$S_0 = slope\ of\ flow\ path\ (\frac{feet}{feet})$

Per CBJ Manual of Storm Water BMP 2010, Table 5-1, page 5-1, design event frequencies are specified. For driveway culvert, a 25-year storm event is the required design return period. We will base our analysis on a 25-year design return period for all drainage structures and catchment areas. Per CBJ Manual of Storm Water BMP 2010, page D-9, basins with a time and concentration 10 minutes or less shall use the 10 minute intensity. Basins with a time of concentration greater than 10 minutes and less than 30 minutes shall interpolate between the 10 and 30 minute values. Rainfall intensity for the site was sourced from the NOAA Atlas 14, Point Precipitation Frequency Estimates, see Appendix E, and is summarized as follows:

	Design Return Period
Tc 16.60 (min)	25-year
Interpolated Intensity (in/hr)=	**1.77**

There is an existing 12" CMP culvert that drains into the existing Delta Drive drainage system at the location where the new subdivision access will tie into the end of the Delta Drive cul-de-sac. The 12" CMP culvert is proposed to be replaced with a 12" CPP culvert along with the rest of the Delta Drive storm system under CBJ Contract BE21-028 "Delta Drive Reconstruction." Work is scheduled for spring/summer 2021. The 12" CPP culvert is being installed to maintain the existing flow around the Delta Drive cul-de-sac.

A=21,786 sqft/43,560 = 0.50 acres

	C_c	I	A		
Q (cfs)=	0.83	1.77	0.50	=	**0.74**

Appendix C
Runoff Coefficient

Runoff Coefficient Calculations	
Project:	Delta Drive Subdivision
Owner:	Bicknell Inc.
Date:	11/19/2020
Prepared By:	M. Minsch
Checked By:	M. Pusich

Pipe P-1: Existing 12" CPP Culvert	
Total Basin Area (SQFT)=	26270
Total Basin Area (ACRE)=	0.60

Surface Type	Location	Area (SQFT)	Total (SQFT)	Total (Acre)	% Overall Basin	Surface Runoff Coefficient	Runoff Coefficient for Each Area
Pavement	Road	3143					
			3143	0.07215335	11.96%	0.9	0.1
Building Roofs	Mobile homes	7084					
			7084	0.16262626	26.97%	0.9	0.1
Gravel Area	Everywhere else	16043					
			16043	0.3682966	61.07%	0.8	0.3
		Total=	26270	0.60	100.00%		0.5
					Composite Runoff Coefficient		**0.84**

Pipe P-2: Proposed 12" CPP	
Total Basin Area (SQFT)=	21736
Total Basin Area (ACRE)=	0.5

Surface Type	Location	Area (SQFT)	Total (SQFT)	Total (Acre)	% Overall Basin	Surface Runoff Coefficient	Runoff Coefficient for Each Area
Pavement	Road	4842					
			4842	0.11115702	22.28%	0.9	0.1
Building Roofs	Mobile homes	4800					
			4800	0.11019284	22.08%	0.9	0.1
Gravel Area	Everywhere else	12094					
			12094	0.27764004	55.64%	0.8	0.2
		Total=	21736	0.50	100.00%		0.4
					Composite Runoff Coefficient		**0.84**

Runoff Coefficient Calculations		
Project:	Delta Drive Subdivision	PDC ENGINEERS PLAN • DESIGN • CONSTRUCT A RESPEC COMPANY 9109 Mendenhall Mall Rd, Ste. 4, Juneau, AK 99801 907.780.6060 | AECC605
Owner:	Bicknell Inc.	
Date:	11/19/2020	
Prepared By:	M. Minsch	
Checked By:	M. Pusich	

Pipe P-3: Existing 12" CPP	
Total Basin Area (SQFT)=	10626
Total Basin Area (ACRE)=	0.24

Surface Type	Location	Area (SQFT)	Total (SQFT)	Total (Acre)	% Overall Basin	Surface Runoff Coefficient	Runoff Coefficient for Each Area
Pavement	Road	5115					
			5115	0.11742424	48.14%	0.9	0.1
Gravel Area	Everywhere else	5511					
			5511	0.12651951	51.87%	0.8	0.1
		Total=	10626	0.24	100.00%		0.2
					Composite Runoff Coefficient		**0.84**

Pipe P-4: Existing 12" CPP Culvert	
Total Basin Area (SQFT)=	21786
Total Basin Area (ACRE)=	0.50

Surface Type	Location	Area (SQFT)	Total (SQFT)	Total (Acre)	% Overall Basin	Runoff Coefficient	Runoff Coefficient for Each Area
Pavement	Road	7037					
			7037	0.16154729	32.30%	0.9	0.1
Gravel Area	Everywhere else	14750					
			14750	0.33861341	67.70%	0.8	0.3
		Total=	21786	0.50	100.00%		0.4
					Composite Runoff Coefficient		**0.83**

Appendix D
Time of Concentration

Time of Concentration Calculations		
Project:	Delta Drive Subdivision	PDC ENGINEERS PLAN • DESIGN • CONSTRUCT A RESPEC COMPANY 9109 Mendenhall Mall Rd, Ste. 4, Juneau, AK 99801 907.780.6060 | AECC605
Owner:	Bicknell Inc.	
Date:	11/19/2020	
Prepared By:	M. Minsch	
Checked By:	M. Pusich	

Pipe P-1: Existing 12" CPP Culvert	
Time of Concentration	
Distance of Flow (Ft):	393
Time of concentration velocity factor:	20
Slope of Flow Path (Ft/Ft):	0.01
Velocity (Ft/Sec):	2
Time of Concentration (Min):	13.10

Pipe P-2: Proposed 12" CPP Culvert	
Time of Concentration	
Distance of Flow (Ft):	338
Time of concentration velocity factor:	20
Slope of Flow Path (Ft/Ft):	0.01
Velocity (Ft/Sec):	2
Time of Concentration (Min):	11.27

Pipe P-3: Existing 12" CPP Culvert	
Time of Concentration	
Distance of Flow (Ft):	388
Time of concentration velocity factor:	20
Slope of Flow Path (Ft/Ft):	0.01
Velocity (Ft/Sec):	2
Time of Concentration (Min):	12.93

Pipe P-4: Existing 12" CPP Culvert	
Time of Concentration	
Distance of Flow (Ft):	498
Time of concentration velocity factor:	20
Slope of Flow Path (Ft/Ft):	0.01
Velocity (Ft/Sec):	2
Time of Concentration (Min):	16.60

Appendix E
Rainfall Intensity

NOAA Atlas 14, Volume 7, Version 2
Location name: Juneau, Alaska, USA*
Latitude: 58.3922°, Longitude: -134.5604°
Elevation: 50.42 ft**
* source: ESRI Maps
** source: USGS

POINT PRECIPITATION FREQUENCY ESTIMATES

Sanja Perica, Douglas Kane, Sarah Dietz, Kazungu Maitaria, Deborah Martin, Sandra Pavlovic, Ishani Roy, Svetlana Stuefer, Amy Tidwell, Carl Trypaluk, Dale Unruh, Michael Yekta, Erica Betts, Geoffrey Bonnin, Sarah Heim, Lillian Hiner, Elizabeth Lilly, Jayashree Narayanan, Fenglin Yan, Tan Zhao

NOAA, National Weather Service, Silver Spring, Maryland
and
University of Alaska Fairbanks, Water and Environmental Research Center

PF tabular | PF graphical | Maps & aerials

PF tabular

PDS-based point precipitation frequency estimates with 90% confidence intervals (in inches/hour)[1]

Duration	Average recurrence interval (years)									
	1	2	5	10	25	50	100	200	500	1000
5-min	1.74 (1.40-2.21)	2.03 (1.61-2.62)	2.52 (1.94-3.34)	2.94 (2.22-3.97)	3.50 (2.58-4.86)	3.95 (2.84-5.59)	4.38 (3.10-6.34)	5.05 (3.49-7.45)	5.95 (4.01-9.01)	6.62 (4.38-10.2)
10-min	1.16 (0.936-1.48)	1.36 (1.08-1.76)	1.69 (1.31-2.24)	1.97 (1.49-2.66)	2.35 (1.73-3.26)	2.65 (1.91-3.75)	2.94 (2.08-4.25)	3.40 (2.35-5.01)	4.00 (2.69-6.05)	4.45 (2.94-6.86)
15-min	0.908 (0.728-1.16)	1.06 (0.840-1.37)	1.32 (1.02-1.75)	1.54 (1.16-2.08)	1.84 (1.35-2.55)	2.06 (1.49-2.92)	2.30 (1.62-3.32)	2.65 (1.83-3.90)	3.12 (2.10-4.72)	3.47 (2.30-5.35)
30-min	0.602 (0.484-0.766)	0.704 (0.556-0.908)	0.876 (0.676-1.16)	1.02 (0.770-1.38)	1.22 (0.896-1.69)	1.37 (0.986-1.94)	1.52 (1.07-2.20)	1.76 (1.22-2.59)	2.07 (1.39-3.13)	2.30 (1.52-3.55)
60-min	0.413 (0.332-0.525)	0.482 (0.381-0.622)	0.600 (0.463-0.794)	0.699 (0.528-0.944)	0.834 (0.613-1.16)	0.939 (0.676-1.33)	1.04 (0.736-1.51)	1.20 (0.833-1.78)	1.42 (0.955-2.14)	1.58 (1.04-2.43)
2-hr	0.306 (0.246-0.390)	0.358 (0.283-0.462)	0.447 (0.345-0.592)	0.520 (0.394-0.703)	0.622 (0.457-0.862)	0.698 (0.503-0.990)	0.775 (0.547-1.12)	0.894 (0.619-1.32)	1.05 (0.710-1.59)	1.17 (0.776-1.81)
3-hr	0.270 (0.217-0.343)	0.315 (0.249-0.407)	0.394 (0.304-0.521)	0.459 (0.347-0.620)	0.548 (0.403-0.761)	0.616 (0.444-0.872)	0.683 (0.482-0.987)	0.788 (0.545-1.16)	0.927 (0.625-1.40)	1.03 (0.683-1.59)
6-hr	0.218 (0.175-0.277)	0.255 (0.201-0.328)	0.317 (0.245-0.420)	0.369 (0.279-0.498)	0.441 (0.324-0.612)	0.496 (0.357-0.703)	0.551 (0.389-0.796)	0.636 (0.440-0.938)	0.748 (0.505-1.13)	0.834 (0.552-1.29)
12-hr	0.163 (0.131-0.207)	0.190 (0.150-0.245)	0.234 (0.181-0.310)	0.271 (0.205-0.366)	0.324 (0.238-0.450)	0.368 (0.265-0.521)	0.414 (0.292-0.598)	0.478 (0.331-0.705)	0.563 (0.380-0.852)	0.627 (0.415-0.968)
24-hr	0.118 (0.107-0.131)	0.138 (0.124-0.155)	0.167 (0.147-0.192)	0.192 (0.166-0.225)	0.230 (0.194-0.275)	0.262 (0.218-0.319)	0.298 (0.243-0.369)	0.344 (0.276-0.434)	0.405 (0.317-0.522)	0.451 (0.348-0.591)
2-day	0.080 (0.073-0.089)	0.093 (0.083-0.104)	0.111 (0.098-0.128)	0.127 (0.110-0.148)	0.150 (0.127-0.180)	0.170 (0.141-0.207)	0.192 (0.156-0.237)	0.219 (0.176-0.276)	0.255 (0.200-0.329)	0.283 (0.218-0.370)
3-day	0.063 (0.058-0.070)	0.073 (0.065-0.082)	0.087 (0.076-0.100)	0.098 (0.085-0.115)	0.116 (0.098-0.138)	0.130 (0.108-0.158)	0.146 (0.119-0.181)	0.166 (0.133-0.209)	0.192 (0.151-0.248)	0.212 (0.163-0.278)
4-day	0.054 (0.049-0.060)	0.062 (0.055-0.069)	0.073 (0.064-0.084)	0.082 (0.071-0.096)	0.096 (0.081-0.115)	0.108 (0.090-0.132)	0.121 (0.099-0.150)	0.137 (0.110-0.173)	0.158 (0.124-0.204)	0.174 (0.134-0.228)
7-day	0.040 (0.036-0.044)	0.045 (0.041-0.051)	0.053 (0.047-0.061)	0.060 (0.052-0.070)	0.070 (0.059-0.084)	0.079 (0.065-0.096)	0.088 (0.072-0.109)	0.100 (0.080-0.126)	0.116 (0.091-0.149)	0.127 (0.098-0.167)
10-day	0.033 (0.030-0.037)	0.038 (0.034-0.042)	0.044 (0.039-0.051)	0.050 (0.043-0.058)	0.058 (0.049-0.069)	0.065 (0.054-0.079)	0.073 (0.059-0.090)	0.082 (0.066-0.104)	0.095 (0.075-0.123)	0.105 (0.081-0.138)
20-day	0.025 (0.023-0.028)	0.029 (0.026-0.032)	0.034 (0.030-0.039)	0.038 (0.032-0.044)	0.043 (0.037-0.052)	0.048 (0.040-0.059)	0.053 (0.044-0.066)	0.060 (0.048-0.076)	0.068 (0.054-0.088)	0.075 (0.058-0.098)
30-day	0.022 (0.020-0.025)	0.025 (0.023-0.029)	0.030 (0.026-0.034)	0.033 (0.029-0.039)	0.038 (0.032-0.046)	0.042 (0.035-0.051)	0.046 (0.038-0.058)	0.052 (0.041-0.065)	0.058 (0.046-0.075)	0.064 (0.049-0.083)
45-day	0.020 (0.018-0.022)	0.023 (0.021-0.026)	0.027 (0.023-0.031)	0.030 (0.026-0.035)	0.034 (0.029-0.040)	0.037 (0.031-0.045)	0.041 (0.033-0.050)	0.044 (0.036-0.056)	0.050 (0.039-0.064)	0.054 (0.041-0.070)
60-day	0.018 (0.017-0.020)	0.021 (0.019-0.024)	0.024 (0.022-0.028)	0.027 (0.023-0.032)	0.031 (0.026-0.037)	0.033 (0.028-0.041)	0.036 (0.029-0.045)	0.039 (0.031-0.049)	0.042 (0.033-0.054)	0.045 (0.035-0.059)

[1] Precipitation frequency (PF) estimates in this table are based on frequency analysis of partial duration series (PDS).

Numbers in parenthesis are PF estimates at lower and upper bounds of the 90% confidence interval. The probability that precipitation frequency estimates (for a given duration and average recurrence interval) will be greater than the upper bound (or less than the lower bound) is 5%. Estimates at upper bounds are not checked against probable maximum precipitation (PMP) estimates and may be higher than currently valid PMP values.

Please refer to NOAA Atlas 14 document for more information.

Back to Top

https://hdsc.nws.noaa.gov/hdsc/pfds/pfds_printpage.html?lat=58.3922&lon=-134.5604&data=intensity&units=english&series=pds

PF graphical

PDS-based intensity-duration-frequency (IDF) curves
Latitude: 58.3922°, Longitude: -134.5604°

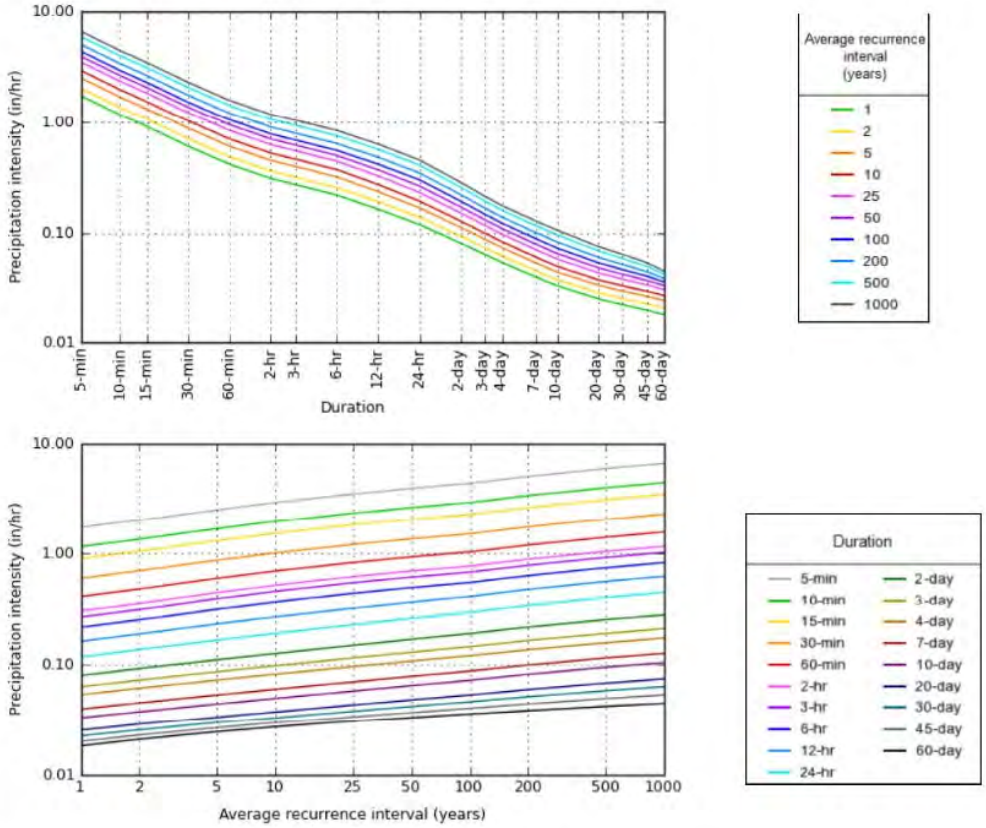

NOAA Atlas 14, Volume 7, Version 2

Created (GMT): Thu Nov 19 20:30:02 2020

https://hdsc.nws.noaa.gov/hdsc/pfds/pfds_printpage.html?lat=58.3922&lon=-134.5604&data=intensity&units=english&series=pds

Maps & aerials

Small scale terrain

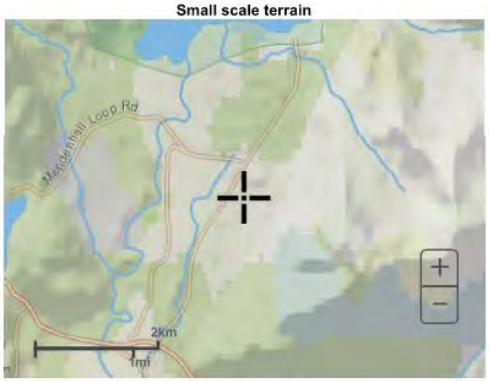

Large scale terrain

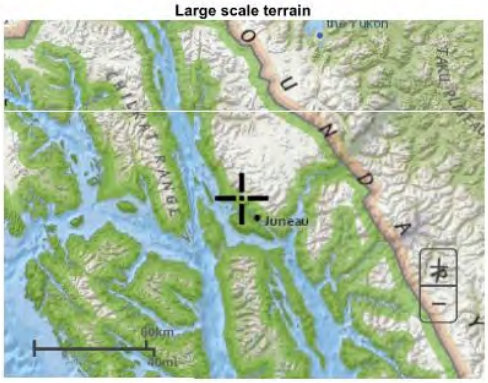

Large scale map

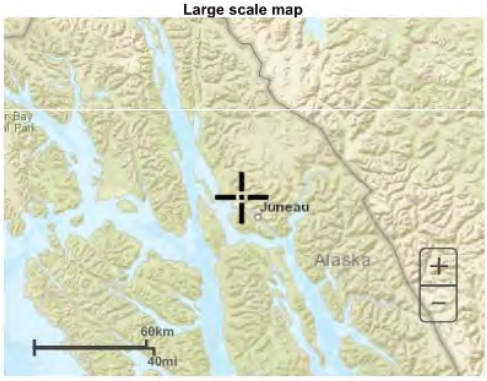

Large scale aerial

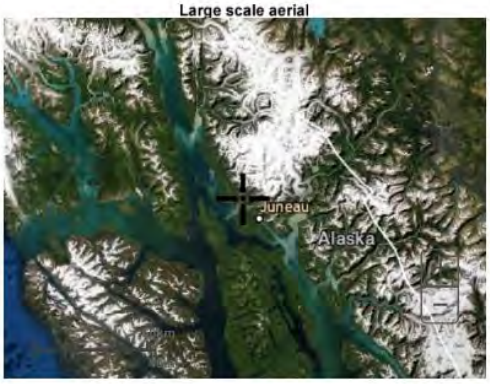

https://hdsc.nws.noaa.gov/hdsc/pfds/pfds_printpage.html?lat=58.3922&lon=-134.5604&data=intensity&units=english&series=pds

Appendix F
Existing & Proposed Capacity Calcs

Discharge Capacity Calculations		
Project:	Delta Drive Subdivision	PDC ENGINEERS PLAN • DESIGN • CONSTRUCT A RESPEC COMPANY 9109 Mendenhall Mall Rd, Ste. 4, Juneau, AK 99801 907.780.6060 | AECC605
Owner:	Bicknell Inc.	
Date:	11/19/2020	
Prepared By:	M. Minsch	
Checked By:	M. Pusich	

The following equation was used to calculate the capacity of pipes P-1, P-2, P-3 and P-4 that drain into the existing Delta Drive ditch system. Capacity was also calculated for the 18" CPP culvert that will transport all of the water discharged from the proposed site into the Delta Drive storm system. The equation is from "Urban Drainage Design Manual: Hydraulic Engineering Circular No. 22, Third Edition."

$$Q = (\mathrm{K/n})\ \mathrm{x}\ \mathrm{A}\ \mathrm{x}\ R^{0.67} \mathrm{x}\ S^{0.5}$$

Q= Discharge in cubic feet per second (cfs)
K = Coefficient for English units (1.486)
n = Manning's coefficient of roughness, obtained from Table 5-3, Page 5-5, of the CBJ Stormwater Manual
A = Cross sectional area in square feet
R = Hydraulic radius
S= Slope

Pipe P-1: Existing 12" CPP Culvert

Inlet Invert=95.19, Outlet Invert=94.98, Length=43', n=0.014. The Manning's n value of 0.014 was determined by the pipe type (CPP-smooth interior) Table 5-3.

	k	n	A	R	S		
Q (cfs)	1.486	0.014	0.79	.25	0.006	=	2.57

Pipe P-2: Proposed 12" CPP Culvert

Inlet Invert=96.55, Outlet Invert=96.20, Length=70', n=0.014. The Manning's n value of 0.014 was determined by the pipe type (CPP-smooth interior) Table 5-3.

	k	n	A	R	S		
Q (cfs)	1.486	0.014	0.79	0.25	0.005	=	2.34

Pipe P-3: Existing 12" CPP Culvert

Inlet Invert=95.21, Outlet Invert=94.88, Length=54', n=0.014. The Manning's n value of 0.014 was determined by the pipe type (CPP-smooth interior) Table 5-3.

	k	n	A	R	S		
Q (cfs)	1.486	0.014	0.79	0.25	0.0061	=	2.59

Pipe P-4: Existing 12" CPP Culvert

Inlet Invert=95.84, Outlet Invert=94.88, Length=5', n=0.014. The Manning's n value of 0.014 was determined by the pipe type (CPP-smooth interior) Table 5-3.

	k	n	A	R	S		
Q (cfs)	1.486	0.014	0.79	0.25	.1920	=	14.51

Pipe P-5: Existing 18" CPP Culvert

Inlet Invert=95.21, Outlet Invert=94.88, Length=5', n=0.014. The Manning's n value of 0.014 was determined by the pipe type (CPP-smooth interior) Table 5-3.

	k	n	A	R	S		
Q (cfs)	1.486	0.014	1.77	0.375	.004	=	14

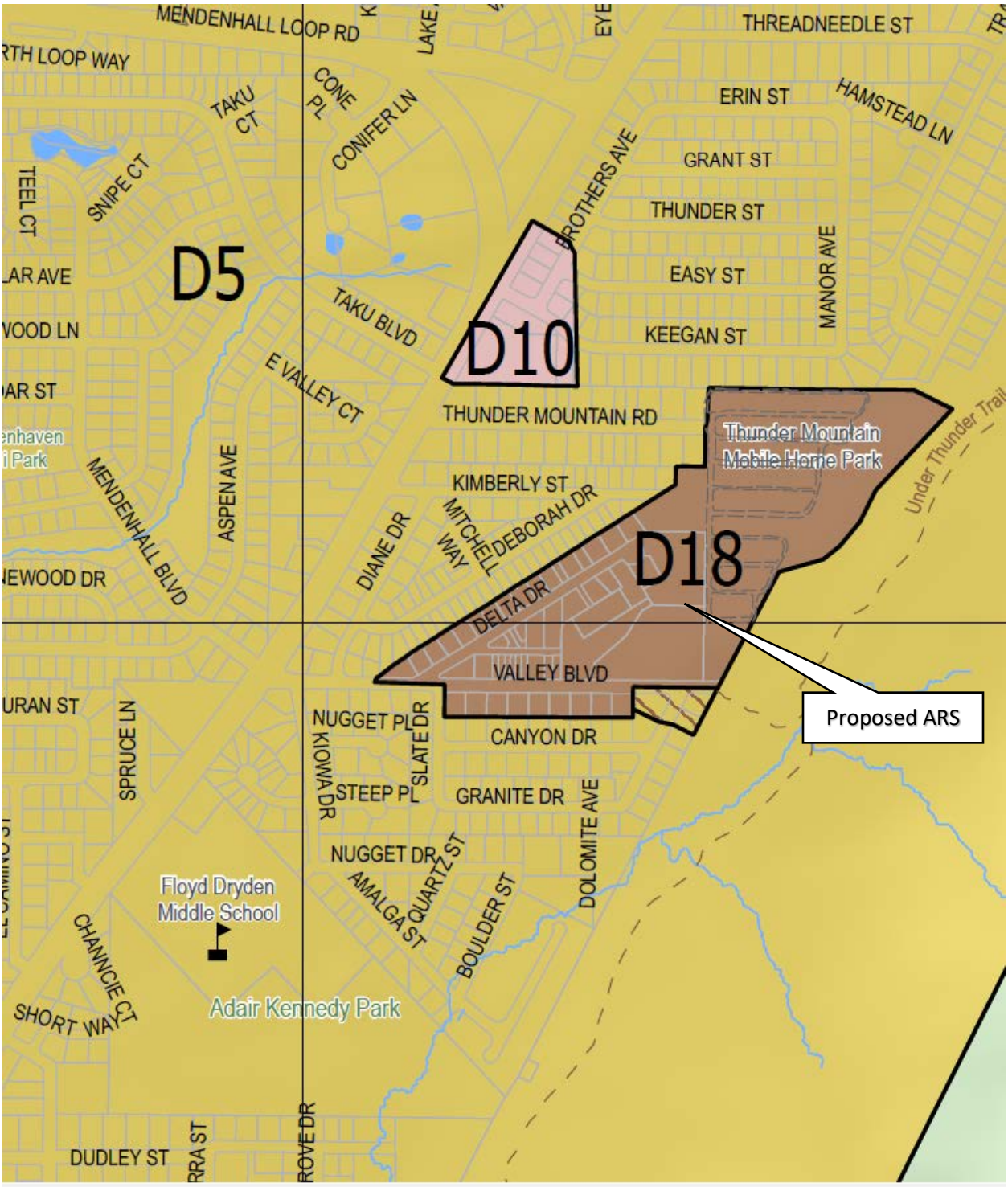
MENDENHALL LOOP RD
THREADNEEDLE ST
ERIN ST
HAMSTEAD LN
GRANT ST
THUNDER ST
EASY ST
KEEGAN ST
MANOR AVE
BROTHERS AVE
TAKU CT
CONE PL
CONIFER LN
SNIPE CT
TEEL CT
D5
D10
D18
TAKU BLVD
E VALLEY CT
THUNDER MOUNTAIN RD
Thunder Mountain Mobile Home Park
Under Thunder Trail
KIMBERLY ST
MITCHELL WAY
DEBORAH DR
DIANE DR
ASPEN AVE
MENDENHALL BLVD
DELTA DR
VALLEY BLVD
Proposed ARS
NUGGET PL
SLATE DR
CANYON DR
KIOWA DR
STEEP PL
GRANITE DR
SPRUCE LN
NUGGET DR
QUARTZ ST
AMALGA ST
BOULDER ST
DOLOMITE AVE
Floyd Dryden Middle School
Adair Kennedy Park
CHANNCIE CT
SHORT WAY
DUDLEY ST

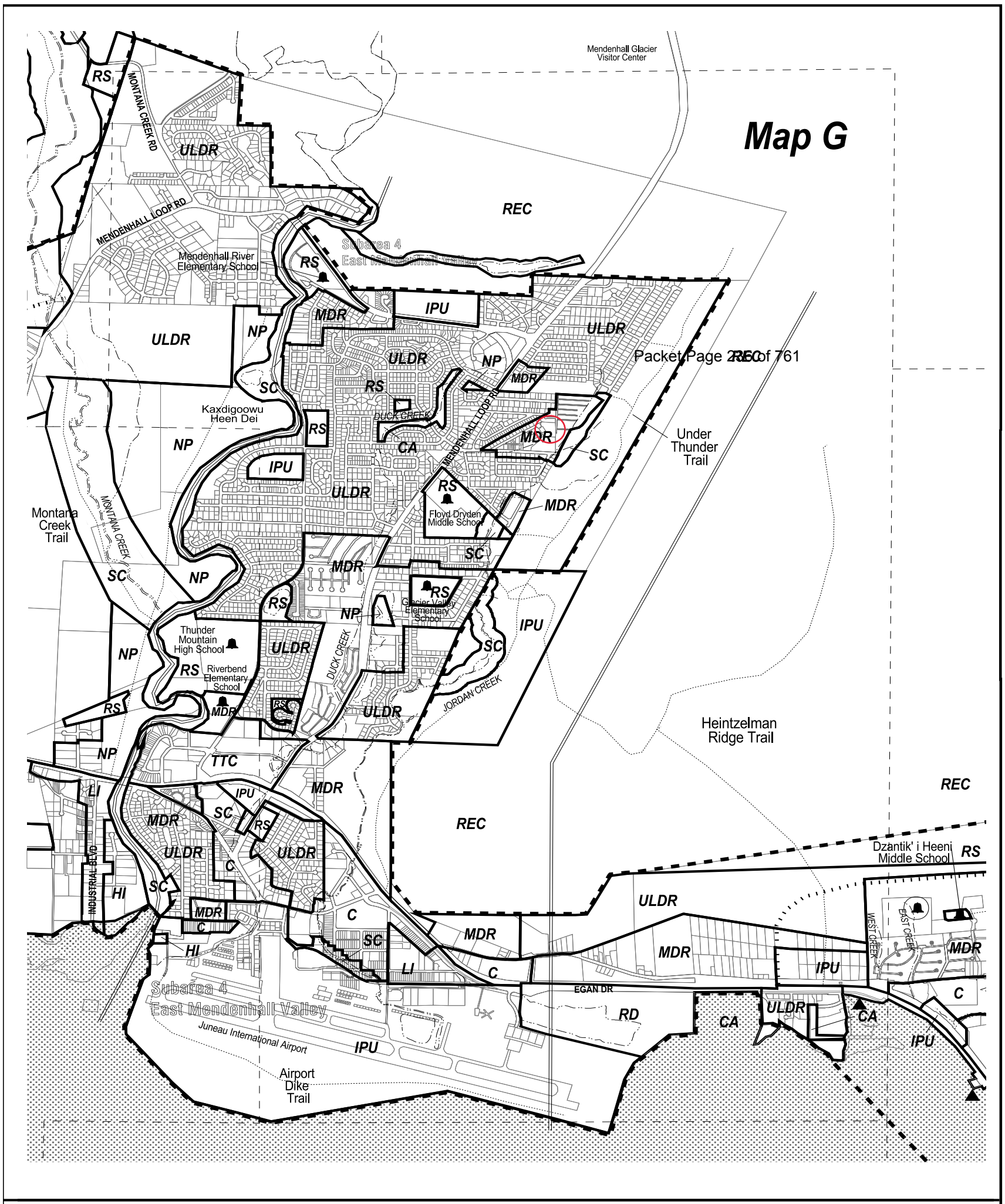

Packet Page 226 of 761

NATURAL RESOURCE

REC	Recreational Resource
RD	Resource Development
SP	State Park
NP	CBJ Natural Area Park
RS	CBJ Recreational Service Park
CA	CBJ Conservation Area
SC	Stream Protection Corridor

COMMERCIAL INDUSTRIAL

C	Commercial
MC	Marine Commercial
WCI	Waterfront Commercial Industrial
LI	Light Industrial
HI	Heavy Industrial

RESIDENTIAL

RDR	Rural Dispersed Residential
RLDR	Rural Low Density Residential
ULDR	Urban Low Density Residential
MDR/SF	Medium Density Residential- Single Family
MDR	Medium Density Residential
HDR	High Density Residential
TTC	Traditional Town Center
M/MU	Marine Mixed Use

PUBLIC

IPU	Institutional and Public Use
	Existing School
	Potential School Location

ROADS TRAILS

	Potential Arterial (alignment not specific)
	Potential Road (alignment not specific)
	Trails

OTHER

	New Growth Areas
	Mendenhall Wetlands State Game Refuge
	Subarea Boundary
	Urban Service Area
	Beach Access
	Streams

2000 0 2000 Feet

City & Borough of Juneau
COMPREHENSIVE PLAN
City & Borough of Juneau
Alaska's Capital City
Adopted October 20th, 2008
Ordinance No. 2008-30

N

NOTE: Potential geophysical hazards, wetlands, flood zones, natural resource setbacks or other features which can affect properties may be present. CONTACT THE COMMUNITY DEVELOPMENT DEPARTMENT FOR DETAILED INFORMATION.

Prepared by: Community Development Department

Map 11.8

Invitation to Comment

On a proposal to be heard by the CBJ Planning Commission

Your Community, Your Voice

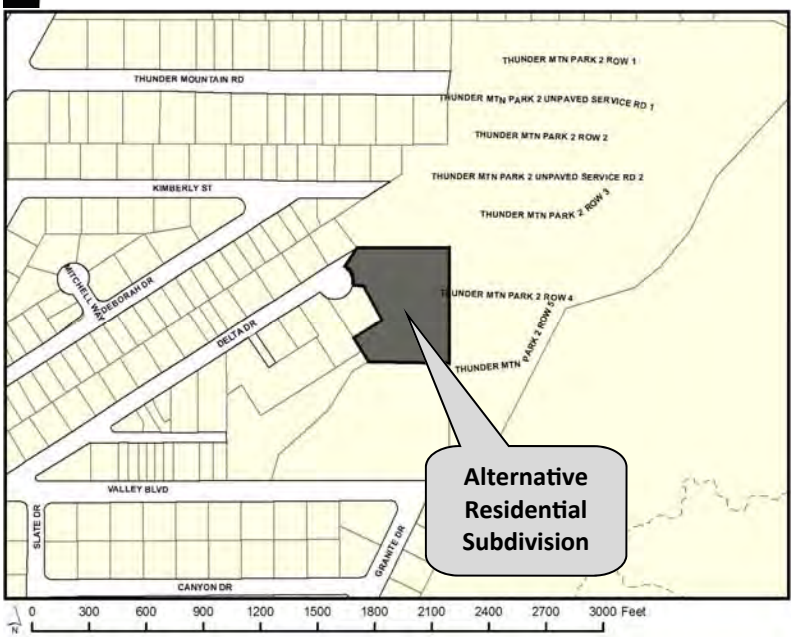

CITY AND BOROUGH OF JUNEAU
ALASKA'S CAPITAL CITY
COMMUNITY DEVELOPMENT
155 S. Seward Street Juneau, Alaska 99801

TO:

An application has been submitted for consideration and public hearing by the Planning Commission for an **Alternative Residential Subdivision creating 15 lots** at **4090 Delta Drive** in a **D18 zone**.

TIMELINE

Staff Report expected to be posted **Monday, January 4, 2020** at **https://juneau.org/community-development/planning-commission.** Find hearing results, meeting minutes and more here as well.

Now through Dec. 21	Dec. 22 — noon, Jan. 11	HEARING DATE & TIME: 7:00 pm, Jan. 12, 2021	Jan. 13
Comments received during this period will be sent to the Planner, **Laurel Christian,** to be included as an attachment in the staff report.	Comments received during this period will be sent to Commissioners to read in preparation for the hearing.	This virtual meeting will be by video and telephonic participation only. To join the Webinar, visit: https://juneau.zoom.us/j/93626358724. The Webinar ID is: 936 2635 8724. To join by telephone, call: +1 253 215 8782 or +1 346 248 7799 or +1 669 900 6833 or +1 301 715 8592 or +1 312 626 6799 or +1 929 436 2866 and enter the Webinar ID.	The results of the hearing will be posted online.

Phone: **(907)586-0715** ◆ Email: **pc_comments@juneau.org**
Mail: **Community Development, 155 S. Seward St, Juneau AK 99801**

Case No.: SMP2020 0004/ARP2020 0001
Parcel No.: 5B2401620011
CBJ Parcel Viewer: http://beta.juneau.org

Laurel Christian

From: dblommer@bicknellinc.com
Sent: Monday, December 28, 2020 10:23 AM
To: Laurel Christian
Subject: Delta Dr Sign Posted
Attachments: Resized_20201228_092437.jpeg

EXTERNAL E-MAIL: BE CAUTIOUS WHEN OPENING FILES OR FOLLOWING LINKS

Hi Laurel,

Here is the picture of the sign at Delta Dr. Let me know if we need to do anything else.

Thanks,
David

(907) 586-0757
Jill.Maclean@juneau.org
www.juneau.org/CDD
155 S. Seward Street • Juneau, AK 99801

MEMO

From: **Jill Maclean, AICP, Director**

To: **Michael LeVine, Planning Commission Chair**

Case Number: **ARP2020 0001 and SMP2020 0004**

RE: Staff Report Correction

Staff received several questions and requests for clarification on staff reports ARP2020 0001 and SMP2020 0004. Below, please find corrections and / or additional clarification. Items bolded are necessary revisions or corrections to the staff report.

ARP2020 0001:

- **Page 3 of 12 (packet page 61): Inaccurately states that only single-family and accessory apartments are permissible. The Alternative Residential Subdivision (ARS) ordinance allows for residential uses (49.15.920(m)), including multifamily dwellings, e.g. condominiums, and is not restricted to single-family dwellings. The residential uses follow the underlying zoning district.**

SMP2020 0004:

- Page 4 of 8 (packet page 149): Clarifying that the staff report is accurate for the number of dwelling units proposed on this site. Density, under the ARS 49.15.920(e)(1) *Density*, is calculated by, *"The number of dwelling units permitted in the development shall be calculated by multiplying the maximum number of dwelling units per gross acre permitted in the underlying zoning district by the number of acres in the alternative residential subdivision and rounding to the nearest whole number."*
    - In this situation, the parent lot is 79,189 square feet in a D18 zoning district. Minimum lot size is 5,000 square feet, and the maximum number of dwelling units is 33. The developer is proposing 14 dwelling units.
    - In other words, the density is based upon the acreage of the parent lot; and a developer may choose how to divvy up the density; and even if a unit-lot on its own meets or exceeds the minimum lot size of the underlying zoning district, additional units are not permissible if the maximum number of dwelling units already exists on the other unit lots. This does not include density bonuses, which are not a consideration for this project.
    - Should the developer choose to modify the type of dwellings or add additional dwelling units, a modification to the plat and / or the Alternative Residential Plan may be required depending on the proposal.

- Page 5 of 8 (packet page 150): Clarifying that the staff report is accurate. Roads within an ARS development may be private *or* public (if the developer builds to city standards, the road may be adopted as a public street).
    - An ARS is permitted to have a private access roads within the development, if the criteria in 49.15.920(f) is met, and these are listed and discussed in the table. The table establishes that the ARS meets the criteria for private access within the development.
    - Exempting the access within the development from 49.35 does not exempt the parent lot from fronting and accessing onto a publically maintained right-of-way. Access to the development must be through a public right-of-way – this is criteria is met, because the parent lot fronts accesses onto Delta Drive.

Page 4 of 8 (packet page 149) Plat Notes:

- **First Plat Note on this page is not completely accurate and should be DELETED.** Plat Note Reads: At time of recording, Lots 2 through 11 and 13 through 15 are limited to one single-family dwelling. Lot 12 may be permitted one single-family dwelling and one accessory apartment. See CBJ 49.15 article ix for current regulations.
    - (Note: Generally, in multi-family zoning districts, units are units and are not considered "accessory apartments" because multiple units are permitted on one lot).

- Third Plat Note should be clarified to read:
    - **Plat Note: Per CBJ 49.15.920(j), No parking areas, dwelling units, unit-lots, or permissible uses may be located within the perimeter buffer. Access to the development may cross a portion of the buffer.**

CITY AND BOROUGH OF JUNEAU

Treasury Division
155 S. Seward Street
Juneau, AK 99801
(907) 586-0377 Phone
(907) 586-5367 Fax

CERTIFICATION OF TAXES AND ASSESSMENTS PAID

I, the undersigned, being duly appointed, qualified Treasurer for the City and Borough of Juneau, First Judicial District, State of Alaska, do hereby certify that, according to the records of the City and Borough of Juneau, the following described real property is carried on the tax records in the name of:

Bicknell Inc
Current Owner

THUNDER MOUNTAIN PARK TR 1A
Legal Description

5B2401620011
Parcel Code Number

and that, all Real Property taxes and assessments levied by the City and Borough of Juneau against said Real Property have been paid in full. If approval is sought between January 1 and the date of levy, there is on deposit with the Treasury Department an amount sufficient to pay Real Property tax for the current year based on current available information; however, owner remains responsible for the balance of any taxes owed when billing occurs on July 1, 2021.

Cheryl A Crawford
Cheryl A Crawford

April 15, 2021
Date

This Certification of Payment of Taxes is valid through June 30, 2021

Planning Commission

(907) 586-0715
PC_Comments@juneau.org
www.juneau.org/plancomm
155 S. Seward Street • Juneau, AK 99801

PLANNING COMMISSION
NOTICE OF DECISION
Date: May 12, 2021
File No.: SMF2021 0002

Bicknell, Inc.
ATTN: David Blommer
PO Box 33517
Juneau, AK 99801

Proposal:	Final plat approval for the Delta Drive Subdivision, an Alternative Residential Subdivision creating 14 unit-lots and 1 parent lot.
Property Address:	4090 Delta Drive
Legal Description:	Thunder Mountain Park Tract 1A
Parcel Code No.:	5B2401620011
Hearing Date:	May 11, 2021

The Planning Commission, at its regular public meeting, adopted the analysis and findings listed in the attached memorandum dated April 27, 2021, and APPROVED the final plat to be conducted as described in the project description and project drawings submitted with the application.

Attachment: April 27, 2021 memorandum from Laurel Christian, Community Development, to the CBJ Planning Commission regarding SMF2021 0002.

May 11, 2021 memorandum from Laurel Christian, Community Development, to the CBJ Planning Commission regarding SMF2021 0002.

This Notice of Decision does not authorize any construction. Prior to starting any project, it is the applicant's responsibility to obtain the required building permits.

This Notice of Decision constitutes a final decision of the CBJ Planning Commission. Appeals must be brought to the CBJ Assembly in accordance to CBJ §01.50.030. Appeals must be filed by 4:30 P.M. on the day twenty days from the date the decision is filed with the City Clerk, pursuant to CBJ §01.50.030(c). Any action by the applicant in reliance on the decision of the Planning Commission shall be at the risk that the decision may be reversed on appeal (CBJ §49.20.120).

Effective Date: The permit is effective upon approval by the Commission, May 11, 2021.

	May 19, 2021
Michael LeVine, Chair Planning Commission	Date
	May 19, 2021
Filed With City Clerk	Date

cc: Plan Review

NOTE: The Americans with Disabilities Act (ADA) is a federal civil rights law that may affect this subdivision. ADA regulations have access requirements above and beyond CBJ - adopted regulations. Owners and designers are responsible for compliance with ADA. Contact an ADA - trained architect or other ADA trained personnel with questions about the ADA: Department of Justice (202) 272-5434, or fax (202) 272-5447, NW Disability Business Technical Center (800) 949-4232, or fax (360) 438-3208.

PLANNING COMMISSION AGENDA
THE CITY AND BOROUGH OF JUNEAU, ALASKA

ARF2021 0001: Final subdivision approval for the Delta Drive Subdivision, an Alternative Residential Subdivision creating 14 unit lots and 1 parent lot - APPROVED

AGENDA ITEM:

Case No.: ARF2021 0001
Applicant: Bicknell, Inc.
Location: 4090 Delta Drive
Proposal: Final subdivision approval for the Delta Drive Subdivision, an Alternative Residential Subdivision creating 14 unit lots and 1 parent lot

RECOMMENDATION:

Staff recommends the Planning Commission adopt the director's analysis and findings and **APPROVE** Final plan approval for the Delta Drive Subdivision, an Alternative Residential Subdivision creating 14 unit-lots and 1 parent lot.

The approval is subject to the following conditions:

1. The applicant shall submit to the department signed HOA documents to be recorded with the final plat.

ATTACHMENTS:

	Description	Upload Date	Type
	Staff Report for ARF2021 0001	4/27/2021	Staff Report
	Staff Report for ARF2021 0001, Part 2	4/27/2021	Staff Report
	Staff Report for ARF2021 0001, Part 3	4/27/2021	Staff Report
	Notice of Decision for ARF2021 0001	5/19/2021	Notice of Decision

CITY AND BOROUGH OF JUNEAU
ALASKA'S CAPITAL CITY
COMMUNITY DEVELOPMENT

PLANNING COMMISSION STAFF REPORT
ALTERNATIVE RESIDENTIAL SUBDIVISION PLAN
ARF2021 0001
HEARING DATE: MAY 11, 2021

(907) 586-0715
CDD_Admin@juneau.org
www.juneau.org/CDD
155 S. Seward Street • Juneau, AK 99801

DATE: April 27, 2021

TO: Michael LeVine, Chair, Planning Commission

BY: Laurel Christian, Planner II

THROUGH: Jill Maclean, Director, AICP

PROPOSAL: Applicant requests final plan approval for the Delta Drive Subdivision, an Alternative Residential Subdivision creating 14 unit-lots and 1 parent lot.

STAFF RECOMMENDATION: Approval with conditions

KEY CONSIDERATIONS FOR REVIEW:

- The final ARS plan is consistent with the preliminary plan approved through ARP20200001.
- All conditions of preliminary plan approval are met or are on-going.
- This approval is subject to SMF20210002.

GENERAL INFORMATION	
Property Owner	Bicknell, Inc.
Applicant	Bicknell, Inc.
Property Address	4090 Delta Drive
Legal Description	Thunder Mountain Park Tract 1A
Parcel Number	5B2401620011
Zoning	D18 Multi-family Residential
Lot Size	79,189 sq. ft.
Water/Sewer	Public
Access	Delta Drive
Existing Land Use	Vacant
Associated Applications	SMP20200004; ARP20200001; SMF20210002

ALTERNATIVE ACTIONS:

1. **Amend:** amend the approval to require conditions.
2. **Deny:** deny the permit and adopt new findings for items 1-3 below that support the denial.
3. **Continue:** to a future meeting date if determined that additional information or analysis is needed to make a decision, or if additional testimony is warranted.

ASSEMBLY ACTION REQUIRED:

Assembly action is not required for this permit.

STANDARD OF REVIEW:

- Quasi-judicial decision
- Requires five (5) affirmative votes for approval
- Code Provisions:
  - 49.15.900
  - 49.15.950
  - 49.80

The Commission shall hear and decide the case per *49.15.900 - Purpose.* *The general purpose of this article is to provide reasonable minimum standards and procedures for unit-lot residential communities in which all or some of the lots do not substantially conform to the minimum requirements for a traditional subdivided lot. This article provides a housing option to allow dwellings on unit-lots to be conveyed by long-term leases, less than fee-simple ownership, or fee-simple ownership, including condominium and other common-interest communities*

SITE FEATURES AND ZONING

SURROUNDING ZONING AND LAND USES	
North (D18)	Thunder Mountain Mobile Home Park
South (D18)	Vacant
East (D18)	Thunder Mountain Mobile Home Park
West (D18)	Multi-family four-plex

SITE FEATURES	
Anadromous	None
Flood Zone	None
Hazard	None
Hillside	None
Wetlands	None
Parking District	None
Historic District	None
Overlay Districts	None

BACKGROUND INFORMATION

Project Description – The applicant requests a final plan approval for the Delta Drive Subdivision, an Alternative Residential Subdivision (ARS) creating 15 lots. The proposal would create 14 unit-lots for residential uses and one (1) parent-lot containing the perimeter buffer, privately maintained access road, and other common amenities (15 lots total).

Background – The table below summarizes relevant history for the lot and proposed development.

Item	Summary
SMP2020 0004	In January of 2021, the Planning Commission reviewed and approved the preliminary plat for the proposed alternative residential subdivision (Attachment E).
ARP2020 0001	In January of 2021, the Planning Commission reviewed and approved the preliminary alternative residential plan (Attachment F).
SMF2020 0002	The applicant has also applied for the final plat review (SMF20210002).

ANALYSIS

Compliance with Title 49 – There have been no changes to the final plan.

Preliminary Plan Conditions of Approval –

Condition	Status	Summary
Prior to approval of the Final Alternative Residential Subdivision Plan, the applicant shall submit homeowners association, or	☒Met ☐Unmet	See discussion below.

Condition	Status	Summary
similar, documents that comply with the requirements of 49.15.950(b).	☐On-going	
Prior to the issuance of the eleventh (11) temporary certificate of occupancy for the development, access to and within the development shall be paved;	☐Met ☐Unmet ☒On-going	
Prior to the issuance of the first temporary certificate of occupancy, the master water meter for the development shall be installed by the developer;	☐Met ☐Unmet ☒On-going	
Per CBJ 49.15.920(o), the final mailbox location shall be reviewed and approved by the CDD Director, and installed prior to the issuance of the first temporary certificate of occupancy.	☐Met ☐Unmet ☒On-going	The construction plans show mailbox locations. During building permit review, staff will verify the location of the mailboxes.

Homeowners' Association – Per CBJ 49.15.950(b) the formation of a homeowners' association (HOA), or similar entity is required. The applicant has submitted HOA, or similar, documents that meet the following criteria:

Topic and Code Reference	Summary	Complies
49.15.950(b)(1) Preparation	*The articles of incorporation and bylaws of the homeowners' association, required under A.S. 34.08 or this chapter, shall be prepared by a lawyer licensed to practice in the state.* Draft HOA documents are included in Attachment B. A letter from the applicant's attorney was submitted that lists their Alaska Bar Number.	☒ Yes ☐ No ☐ N/A
49.15.950(b)(2) Responsibilities	*The homeowners' association shall be responsible for the maintenance of open space, water and sewer utilities, and stormwater control features and drainages. The association documents shall specify how any other common facilities shall be operated and maintained. The association documents shall require homeowners to pay periodic assessments for the operation, maintenance and repair of common facilities. The documents shall require that the governing body of the association adequately maintain common facilities.* Maintenance is discussed on pages 8 and 9 of the HOA documents. Assessments are discussed on page 8 of the HOA documents.	☒ Yes ☐ No ☐ N/A
49.15.950(b)(3) Phased Development	*If the alternative residential subdivision is phased, the association documents shall specify how the cost to build, operate, and maintain improved open space and common facilities shall be apportioned among homeowners of the initial phase and homeowners of later phases.* The development is not phased.	☐ Yes ☐ No ☒ N/A
49.15.950(b)(4) Recording	*The homeowners' association documents shall be recorded with the approved final plat.*	☒ Yes ☐ No ☐ N/A

Topic and Code Reference	Summary	Complies
	HOA documents will be recorded with the final plat; this is a recommended condition of approval.	

AGENCY REVIEW

No agency review comments were received at time of writing this staff report.

PUBLIC COMMENTS

CDD conducted a public comment period between April 7 and April 19. Public notice was mailed to property owners within 500 feet of the subject parcel. A public notice sign was also posted on-site two weeks prior to the scheduled hearing. Staff received one public comment. Public comments submitted at time of writing this staff report can be found in Attachment D.

Name	Summary
Rhonda Ward	Ms. Ward questioned if drainage was addressed as part of the subdivision review and expressed concern for existing flooding along the common property line with the Thunder Mountain Mobile Home Park. The grading and drainage plan in Attachment A shows that drainage will be routed through ditches and underground drains to Delta Drive. The grading plan was reviewed and approved by CBJ Engineering and Public Works during review of the preliminary plat (SMP20200004).

FINDINGS

Final plan approval criteria – Per CBJ 49.15.950 the director makes the following findings:

1. ***Has the applicant complied with any conditions required in the notice of decision approving the preliminary plan?***

   Analysis: No additional analysis required.

   Finding: Yes. All conditions of preliminary plan approval have been met or are operational/on-going.

2. ***Has the applicant submitted homeowners' association (HOA), or similar, documents to be recorded with the final plat?***

   Analysis: No additional analysis required.

   Finding: Yes. With recommended conditions, the applicant will submit final HOA documents to be recorded with the plat.

3. ***Does the final plan substantially conform to the approved preliminary plan and requirements of CBJ Title 49.15 Article 900?***

   Analysis: No additional analysis required.

Finding: Yes. The final plan substantially conforms to the approved preliminary plan.

RECOMMENDATION

Staff recommends the Planning Commission adopt the director's analysis and findings and **APPROVE** Final plan approval for the Delta Drive Subdivision, an Alternative Residential Subdivision creating 14 unit-lots and 1 parent lot.

The approval is subject to the following conditions:

1. The applicant shall submit to the department signed HOA documents to be recorded with the final plat.

STAFF REPORT ATTACHMENTS

Item	Description
Attachment A	Application Packet
Attachment B	HOA Documents
Attachment C	Abutters Notice and Public Notice Sign Photo
Attachment D	Public Comments
Attachment E	ARP20200001 Preliminary Plan Notice of Decision and Staff Report
Attachment F	SMP20200004 Preliminary Plat Notice of Decision and Staff report

CITY AND BOROUGH OF JUNEAU
ALASKA'S CAPITAL CITY
COMMUNITY DEVELOPMENT

DEVELOPMENT PERMIT APPLICATION

NOTE: Development Permit Application forms must accompany all other Community Development Department land use applications.

To be completed by Applicant

PROPERTY LOCATION

Physical Address
4090 Delta Drive, Juneau, AK 99801

Legal Description(s) (Subdivision, Survey, Block, Tract, Lot)
Thunder Mountain Park TR 1A

Parcel Number(s)
5B2401620011

☐ This property located in the downtown historic district
☐ This property located in a mapped hazard area, if so, which _____

PROPERTY OWNER

Property Owner	Contact Person
Bicknell, Inc.	David Blommer

Mailing Address	Phone Number(s)
P.O. Box 33517	
E-mail Address: dblommer@bicknellinc.com	907-789-5727

LANDOWNER/ LESSEE CONSENT Required for Planning Permits, not needed on Building/ Engineering Permits

I am (we are) the owner(s)or lessee(s) of the property subject to this application and i (we) consent as follows:

A. This application for a land use or activity review for development on my (our) property is made with my complete understanding and permission.
B. I (we) grant permission for officials and employees of the City and Borough of Juneau to inspect my property as needed for purposes of this application.

X _____ Landowner/Lessee Signature — Date: 3/15/21

X _____ Landowner/Lessee Signature — Date: _____

NOTICE: The City and Borough of Juneau staff may need access to the subject property during regular business hours and will attempt to contact the landowner in addition to the formal consent given above. Further, members of the Planning Commission may visit the property before the scheduled public hearing date.

APPLICANT

Applicant	Contact Person
SAME	SAME

Mailing Address	Phone Number(s)
SAME	
E-mail Address: SAME	

X _____ Applicant's Signature — Date of Application: 3/15/21

DEPARTMENT USE ONLY BELOW THIS LINE

Intake Initials	
JFM	
Case Number	**Date Received**
SMF21-02 / ARF21-01	3/18/21

This form and all documents associated with it are public record once submitted.

INCOMPLETE APPLICATIONS WILL NOT BE ACCEPTED

For assistance filling out this form, contact the Permit Center at 586-0770.

CITY AND BOROUGH OF JUNEAU
ALASKA'S CAPITAL CITY
COMMUNITY DEVELOPMENT

SUBDIVISION AND DEVELOPMENT PLAN APPLICATION

See subdivision hand-outs for more information regarding the permitting process and the materials required for a complete application.

NOTE: Must be accompanied by a DEVELOPMENT PERMIT APPLICATION form.

To be completed by Applicant

PROJECT SUMMARY

An alternative residential subdivision (ARS) of Thunder Mountain Park TR 1A into Delta Drive Subdivision comprised of 14 unit lots and 1 parent lot.

Number of Existing Parcels 1 Total Land Area 1.82 acres Number of Resulting Parcels 15

HAS THE PARCEL BEEN CREATED BY A MINOR SUBDIVISION IN THE PRECEDING 24 MONTHS

(✓) NO SMP 2004 ( ) YES Case Number _____

TYPE OF SUBDIVISION OR PLATTING APPROVAL REQUESTED

MINOR DEVELOPMENT (changing or creating 13 or fewer lots)	MAJOR DEVELOPMENT (changing or creating 14 or more lots)
( ) Preliminary Plat (MIP)	( ) Preliminary Plat (SMP)
( ) Final Plat (MIF)	(•) Final Plat (SMF)
( ) Panhandle Subdivision	( ) Preliminary Development Plan – PUD (PDP)
( ) Accretion Survey	( ) Final Development Plan – PUD (PDF)
( ) Boundary Adjustment	( ) Development Plan – ARS (ARP)
( ) Lot Consolidation (SLC)	( ) Development Plan – ARS (ARF)
( ) Bungalow Lot Subdivision	( ) Bungalow Lot Subdivision
( ) Common Wall/Zero Lot Subdivision	( ) Common Wall/Zero Lot Subdivision
( ) Other _____	( ) Other _____

ALL REQUIRED DOCUMENTS ATTACHED

- [ ] **Pre-application conference notes** SMP 20-04
- [ ] **Narrative including:** SMP 20-04
  - [✓] Legal description(s) of property to be subdivided
  - [✓] Existing structures on the land
  - [✓] Zoning district
  - [✓] Density
  - [✓] Access
  - [✓] Current and proposed use of any structures
  - [✓] Utilities available
  - [✓] Unique characteristics of the land or structure(s)
- [✓] **Preliminary Plat checklist** SMP 20-04

Arf Smf.

----------DEPARTMENT USE ONLY BELOW THIS LINE----------

SUBDIVISION/PLATTING FEES	Fees	Check No.	Receipt	Date
Application Fees	$ ~~1,140~~ 1056			
Public Notice sign ~~Admin. of Guarantee~~	$ 150			
Adjustment	$ 1,140 (ARF)	+ deposit included		
Total Fee	$ ~~1,290~~ 2,340			

(ARF) 49.85.100(8)(6) $300 + 60 per unit max. 20 units

For assistance filling out this form, contact the Permit Center at 586-0770.

INCOMPLETE APPLICATIONS WILL NOT BE ACCEPTED

Case Number	Date Received
SMF 21-002	3/18/21

CITY AND BOROUGH OF JUNEAU
ALASKA'S CAPITAL CITY
COMMUNITY DEVELOPMENT

ALTERNATIVE RESIDENTIAL SUBDIVISION APPLICATION

See reverse side for more information regarding the permitting process and the materials required for a complete application.

NOTE: Must be accompanied by a DEVELOPMENT PERMIT APPLICATION form.

To be completed by Applicant

PROJECT SUMMARY

An alternative residential subdivision (ARS) of Thunder Mountain Park TR 1A into Delta Drive Subdivision comprised of 14 unit lots and 1 parent lot.

TYPE OF ALTERNATIVE RESIDENTIAL SUBDIVISION APPROVAL REQUESTED

(please see submittal requirements on reverse)

- ☐ Alternative Residential Subdivision (ARP) Preliminary Plan Approval
- ☑ Alternative Residential Subdivision (ARF) Final Plan Approval (or Extension)
- ☐ Amendment to Approved (ARP) Preliminary Plan*
- ☐ Amendment to Approved (ARF) Final Plan*

* Minor amendments will be reviewed by the Director; Major amendments will be reviewed by the Planning Commission.

LEGAL DESCRIPTION(S) OF PROPERTY INVOLVED

Thunder Mountain Park TR 1A

Number of Existing Parcels 1 Total Land Area 1.82 acres Number of Resulting Parcels 15

PROPOSED USE OF LAND AND BUILDING(S)

Zoning District(s) D-18

Right-of-Way Frontage Proposed 58 feet

Number of Dwelling Units Proposed 14 units

Parking Proposed 28 stalls

Percent Open Space 54%

Percent Buffer 10%

Density Proposed 8 units per acre

Density Bonus ◯ YES ◯ NO

ALL REQUIRED MATERIALS ATTACHED

- ☑ **Complete application per CBJ 49.15.940** (preliminary) **or CBJ 49.15.950** (final)
- ☐ **Pre-Application Conference notes**
- ☐ **Narrative including:**
  - ☐ Current use of land or building(s)
  - ☐ Unique characteristics of land or building(s)
  - ☐ How the proposed project conforms to the Comprehensive Plan and CBJ Title 49 How
  - ☐ the proposed project effects public health, safety, and welfare
  - ☐ How the proposed project is in harmony with the surrounding neighborhood
- ☐ **Preliminary development plan** (detailed on page 2)
- ☐ **Density Bonus**
  - ☐ Open Space
  - ☐ Stream Setback
  - ☐ Lower Income Households / Workforce Households
  - ☐ Unusual Enhancements
  - ☐ Public Right-of-Way Access
  - ☐ Shared Use Pathways
  - ☐ 5-Star Plus Energy Efficiency
  - ☐ 6-Star Energy Efficiency
  - ☐ High-efficiency Primary Heating Methods

----------DEPARTMENT USE ONLY BELOW THIS LINE----------

This form and all documents associated with it are public record once submitted.

INCOMPLETE APPLICATIONS WILL NOT BE ACCEPTED

For assistance filling out this form, contact the Permit Center at 586-0770.

Case Number	Date Received
ARF 21-62	

Alternative Residential Subdivision Application Instructions

Alternative Residential Subdivision outlined in CBJ 49.15.900

Each application for an Alternative Residential Subdivision is reviewed by the Planning Commission at a public hearing. The permit procedure is intended to provide the Commission the flexibility necessary to make decisions tailored to individual applications. The Commission may stipulate conditions to mitigate external adverse impacts from the proposed use. If it is determined that these impacts cannot be satisfactorily overcome, the permit shall be denied.

Pre-Application Conference: A pre-application conference is required prior to submitting an application. The applicant will meet with City & Borough of Juneau and Agency staff to discuss the proposed development, the permit procedure, and to determine the application fees. To schedule a pre-application conference, please contact the Permit Center at 586-0770 or via email at Permits@juneau.org.

Application: An application for an Alternative Residential Subdivision will not be accepted by the Community Development Department until it is determined to be complete. The items needed for a complete application are:

1. **Forms:** Completed Alternative Residential Subdivision Application and a Development Permit Application forms.
2. **Fees:** The fee is dependent upon the number of residential structures involved. Any development, work or use done without a permit issued will be subject to double fees. All fees are subject to change.
3. **Project Narrative:** A detailed narrative describing the project.
4. **Plans:** outlined in CBJ 49.15.940(b)(2). (Surveyed Plans Required)
    a. The amount of land for housing, open space, buffer, access, parking, and pedestrian circulation
    b. The number and types of housing units and proposed density
    c. The natural features to be protected and hazards to be avoided
    d. The public, if any, and private services to be provided

Document Format: All materials submitted as part of an application shall be submitted in either of the following formats:

1. Electronic copies;
2. Paper copies 11" X 17" or smaller (larger paper size may be preapproved by the Community Development Department).

Preliminary Plan Approval

Application Review & Hearing Procedure:

Review: The Community Development Department shall determine when the Alternative Residential Subdivision Application is compete and advise the developer. Within 60 days of determining that an application is complete, the Director shall schedule the preliminary plan for a public hearing.

Hearing: All Alternative Residential Subdivision applications must be reviewed by the Planning Commission. The Commission shall review the preliminary plan and approve, approve with conditions, or deny pursuant to 49.15.940.

Public Notice Responsibilities: As part of the Preliminary Plan Approval, proper public notice must be given as outlined in CBJ 49.15.230 which consists of the following:

The Community Development Department will give notice of the pending Planning Commission meeting and its agenda in the local newspaper a minimum of 10-days prior to the meeting. Furthermore, the department will mail abutters notices to all property owners within 500-feet of the project site.

The Applicant will post a sign on the site at least 14 days prior to the meeting. The sign shall be visible from a public right-of-way or where determined appropriate by CDD. Signs may be produced by the Community Development Department for a preparation fee of $50, and a $100 deposit that will be refunded in full if the sign is returned within seven days of the scheduled hearing date. If the sign is returned between eight and 14 days of the scheduled hearing $50 may be refunded. The Applicant may make and erect their own sign. Please speak with the Community Development Department for more information.

Final Plan Approval

After completion of all conditions and Commission approval of the preliminary plan in accordance with the Conditional Use permit procedures, the final plan shall be submitted for review and approval according to the following:

1. An application, fee, and a final plan must be submitted for Commission review.
2. Formation of a homeowners' association, or similar entity, is required, outlined in CBJ 49.15.950(b)(1)-(4).
3. The Commission may approve the final plan if it substantially conforms to the approved preliminary plan and all requirements of this article.

Phased Development: An applicant may develop an Alternative Residential Subdivision in phases, provided:

1. The initial application includes a preliminary development plan sufficient to assess the cumulative effects of the entire Alternative Residential Subdivision on the neighborhood and the environment according to the standards in subsection 49.15.940.
2. Each phase shall be so designed and implemented that, when considered with reference to any previously constructed phases but without reference to any subsequent phases, it meets the design standards applicable to the entire Alternative Residential Subdivision. Construction and completion of open space and common facilities serving each phase in an Alternative Residential Subdivision shall proceed at a rate no slower than that of other structures in the phase. No phase shall be eligible for final plan approval until all components of all preceding phases are substantially complete and homeowners' association documents have been approved.
3. Each phase of an Alternative Residential Subdivision shall be reviewed according to the provisions of this chapter then current. Each phase of an Alternative Residential Subdivision shall maintain design continuity with earlier phases. At no point during a phased development shall the cumulative density exceed that established in the approved preliminary plan.

Amendments

The developer of an Alternative Residential Subdivision may request an amendment to an approved preliminary or final Alternative Residential Subdivision plan. The request shall state the reasons for the amendment and shall be submitted in writing to the director, who shall inform the developer within 15 days whether the request shall be processed as a minor amendment or major amendment.

1. A minor amendment is a change consistent with the conditions of the original plan approval and would result in:
    a. Insignificant change in the outward appearance of the development;
    b. Insignificant impacts on surrounding properties;
    c. Insignificant modification in the location or siting of buildings or open space;
    d. No reduction in the number of parking spaces below that required;
    e. A delay of no more than one year in the construction or completion schedule for the project or, in the case of a phased project, the phase for which the amendment is requested.
2. All other amendments shall be reviewed by the Commission upon payment of a filing fee and in accordance with the requirements of the original plan approval.

INCOMPLETE APPLICATIONS WILL NOT BE ACCEPTED

PDC
PLAN • DESIGN • CONSTRUCT
A Division of RESPEC Company LLC

March 15, 2021

Ms. Laurel Christian
City and Borough of Juneau
Community Development Department
155 South Seward Street
Juneau, AK 99801

Re: PDC Response to: SMP20200004 V1 NOD Plat Review Comments
Case Number SMP20200004 / ARP20200001
Legal Description: THUNDER MOUNTAIN PARK TR 1A Parcel No.:5B2401620011
PDC Project No. 20098JN

Dear Laurel;

The following are responses to the City and Borough of Juneau Planning Commission Notice of Decision comments dated January 25, 2021. We have restated the CBJ review comment with our response below.

1. Prior to approval of the final plat, Certification from the CBJ Treasurer is required showing that all real property taxes and special assessments levied against the property for the year of recording have been paid;

RESPONSE: *This will be complied with by the Applicant.*

2. Prior to approval of a final plat, the applicant shall submit a complete set of construction plans for all required improvements to the Community Development Department for review by the Director of Engineering & Public Works for compliance with CBJ 49.35.140;

RESPONSE: *Final signed construction drawings have previously been submitted for this project.*

3. Prior to approval of the final plat, the developer shall submit a final drainage plan to be approved by CBJ Engineering & Public Works. This drainage plan must be prepared by an Alaskan licensed engineer in accordance with CBJ 49.35.510;

RESPONSE: *Drainage plan was submitted to CBJ for this project with the preliminary plat submittal package. No review comments have been received to date and we assume that the drainage plan has been accepted.*

4. Prior to approval of the final plat, the applicant shall submit a revised preliminary plat

Thunder Mountain Park Tract 1A
Parcel Code No.: 5B2401620011 File No.:SMP2020 0004
PDC Project No. 20098JN
March 15, 2021

Should you have any questions, please contact our office at your convenience.

Sincerely

J. Mark Pusich, PE
Principal Civil/Structural Engineer
PDC

P:\2020\20098JN-Bicknell_Delta\1Corrspnd\Agency_CBJ\21y02m12d_Response NOD_SMP20-04.docx

with the following revisions:

a. Add the following plat note:

   i. ACCESS TO LOTS SHALL BE VIA ACCESS EASEMENTS SHOWN ON THIS PLAT AND IS SUBJECT TO THE REQUIREMENTS IN THE "[private common driveway access, utility, and maintenance agreement – edit title as appropriate]" RECORDED WITH THIS SUBDIVSION.

RESPONSE: *This item has been complied with*

b. Show a five-foot perimeter buffer along the southwest lot line bordering Delta Acres Addition 1 Lot 8.

RESPONSE: *This item has been complied with.*

c. Include bearing labels for:

   i. The eastern lot line of Lot 6

   ii. The lot lines between lots 7 and 8 and 9 and 10

RESPONSE: *This item has been complied with*

d. Per sheet C203, Grading Plan, a drainage easement should be added to the following locations:

   i. Eastern side of the development in the 10-foot perimeter buffer

   ii. Rear of Lot 11;

RESPONSE: *This item has been complied with*

5. Prior to the issuance of the first temporary certificate of occupancy, the master water meter for the development shall be installed by the developer;

RESPONSE: *The Applicant will comply with this request.*

6. Prior to the issuance of the eleventh (11) temporary certificate of occupancy for the development, access to and within the development shall be paved.

RESPONSE: *The Applicant will comply with this request.*

DELTA DRIVE SUBDIVISION CONSTRUCTION IMPROVEMENT PLAN

JUNEAU, ALASKA

SHEET INDEX

SHEET No.	DESCRIPTION
C001	COVER SHEET
C002	GENERAL NOTES, ABBREVIATIONS AND SYMBOLS
C003	SUMMARY TABLES
C004	EXISTING SITE CONDITIONS
C100	TYPICAL SECTIONS
C101	CONSTRUCTION DETAILS
C102	CONSTRUCTION DETAILS
C200	OVERALL SITE PLAN
C201	SITE & UTILITY PLAN
C202	SITE & UTILITY PLAN
C203	GRADING PLAN
C204	WATER METER ENCLOSURE DETAILS
C205	WATER METER ENCLOSURE DETAILS
C206	WATER METER ENCLOSURE DETAILS
C207	WATER METER ENCLOSURE DETAILS
C300	EROSION & SEDIMENT CONTROL PLAN
C301	EROSION & SEDIMENT CONTROL DETAILS

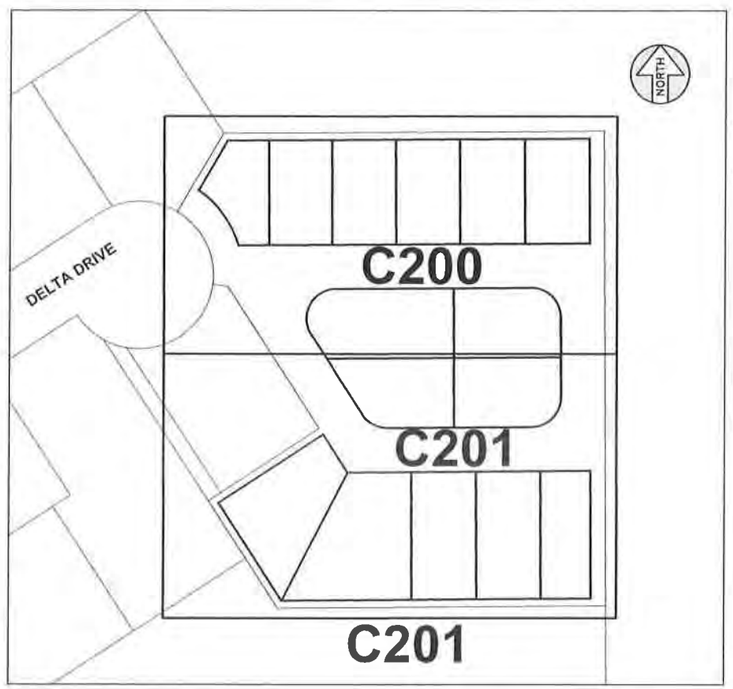

SHEET KEY MAP

N.T.S.

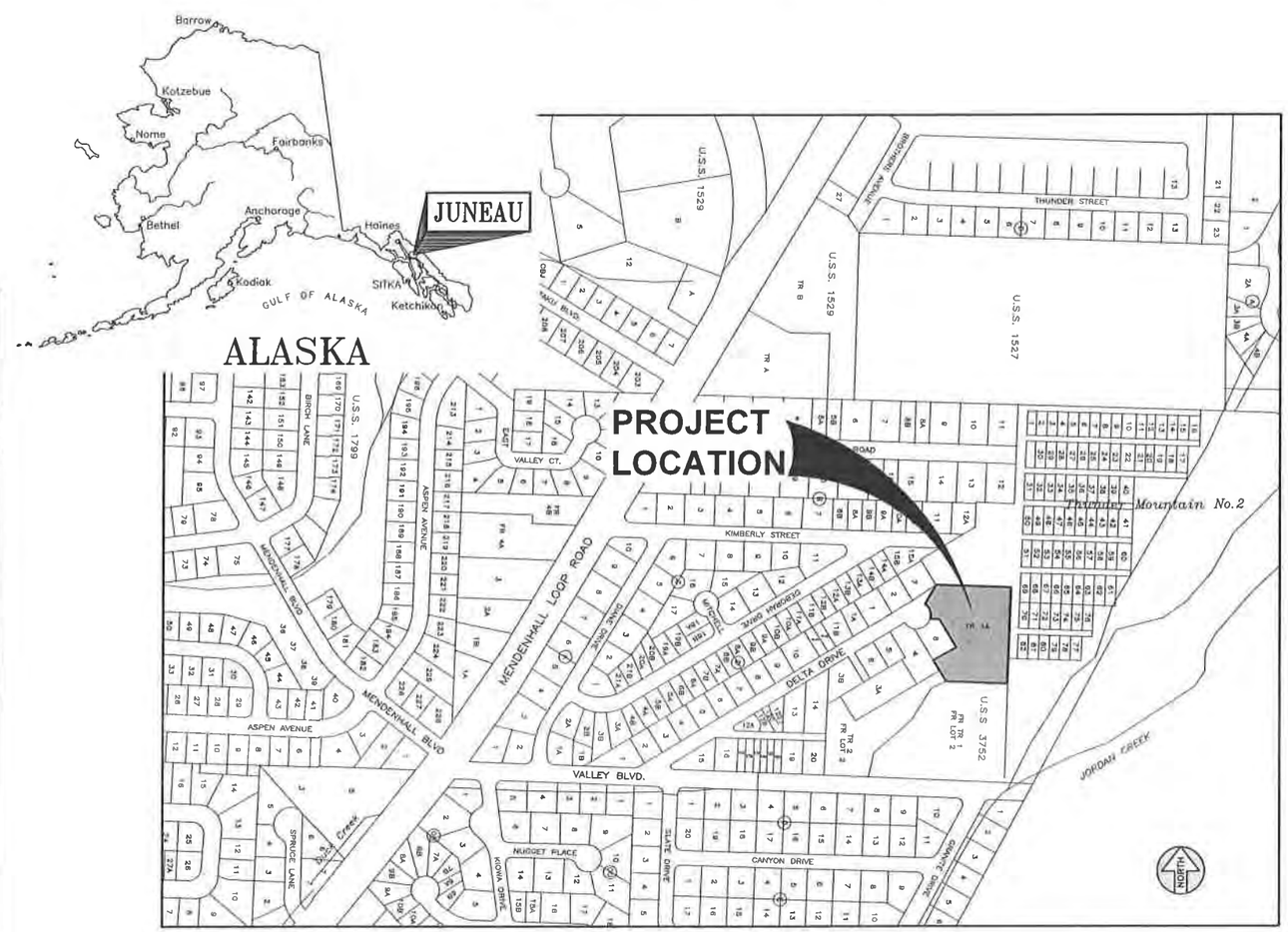

PROJECT LOCATION MAP

500' 0 250' 500' 1000'

SCALE: 1"=500'

DESIGN MSM					
DRAWN MSM					
CHECK JMP					
APPROVED JMP					
FILE:	No.	DATE	REVISION	BY	APRVD.

DELTA DRIVE SUBDIVISION

JUNEAU, AK

BICKNELL INC. QUALITY CONSTRUCTION

STATE OF ALASKA 19TH Joseph M. Parisch CE 8152 REGISTERED PROFESSIONAL ENGINEER 12/03/20

PDC ENGINEERS
PLAN • DESIGN • CONSTRUCT
A BESPEC COMPANY
9109 Mendenhall Mall Rd. Ste. 4, Juneau, AK 99801
907.780.6060 | AECC605

COVER SHEET

DATE: Dec 03, 2020
PDC No. 20098JN

SHEET C001

P:\2020\20098JN-Bicknell_Delta\C\C0001and20098JN.dwg PLOT: December 03, 2020 at: 3:58pm Micki Minsch

GENERAL CONSTRUCTION NOTES

1. CBJ ENGINEERING STANDARD DETAILS BOOK FOR CIVIL ENGINEERING PROJECTS AND SUBDIVISION IMPROVEMENTS DATED AUGUST, 2011 AND CBJ ENGINEERING STANDARD SPECIFICATIONS DATED DECEMBER, 2003 ARE MADE A PART OF THIS CONTRACT, WITH CURRENT REVISIONS AS APPLICABLE.
2. LARGE BOULDERS, HARDPAN, STUMPS, LOGS, ORGANICS AND GROUND WATER MAY BE ENCOUNTERED AT VARIOUS DEPTHS DURING EXCAVATION OPERATIONS. THESE MATERIALS SHALL BE DISPOSED OF AS REQUIRED BY THE ENGINEER.
3. GRADES AND ALIGNMENTS SHOWN ON THESE PLANS ARE SUBJECT TO MINOR REVISIONS AS APPROVED BY THE ENGINEER.
4. LOCATION OF WATER SYSTEM IMPROVEMENTS, SANITARY SEWER MANHOLES, STORM DRAIN STRUCTURES, PIPING AND PIPE LENGTHS ARE SUBJECT TO MINOR REVISIONS AS APPROVED BY THE ENGINEER.
5. LOCATIONS OF EXISTING UNDERGROUND SEWER, WATER, TELEPHONE, CABLE TELEVISION, AND POWER UTILITIES SHOWN ON THESE PLANS WERE DERIVED FROM CBJ AS-BUILTS OR FIELD LOCATES. ACTUAL LOCATIONS MAY VARY FROM THOSE SHOWN. THE CONTRACTOR IS RESPONSIBLE FOR LOCATING, PROTECTING AND MAINTAINING THE UTILITIES THROUGHOUT THE CONSTRUCTION OF THIS PROJECT. ANY DAMAGE RESULTING TO THESE UNDERGROUND UTILITIES DURING CONSTRUCTION SHALL BE PAID FOR BY THE CONTRACTOR AND SHALL BE CONSIDERED INCIDENTAL TO THE CONTRACT. CALL "DIAL BEFORE YOU DIG" @ 586-1333 FOR UNDERGROUND UTILITY LOCATES AND 811 ALASKA DIG LINE FOR ACS AND GCI PRIOR TO ANY EXCAVATION ACTIVITIES.
6. CONTRACTOR SHALL ASSURE GARBAGE PICKUP, DAILY MAIL SERVICE, FUEL AND SERVICE DELIVERIES WILL BE UNINTERRUPTED TO ALL RESIDENTS AFFECTED BY THIS PROJECT.
7. PROPERTY LINE LOCATIONS USED IN THESE PLANS WERE DERIVED FROM RECORD PLATS AND DO NOT REPRESENT A SUBDIVISION BOUNDARY SURVEY.
8. ALL SIGN INSTALLATIONS OR RELOCATIONS SHALL BE PERFORMED ACCORDING TO THE "MANUAL ON UNIFORM TRAFFIC CONTROL DEVICES" (M U.T.C.D.) WITH THE ALASKA SUPPLEMENT
9. ALL ITEMS DESIGNATED TO BE REMOVED SHALL BE DISPOSED OF AT AN APPROVED DISPOSAL SITE, EXCEPT AS NOTED IN THE CONTRACT DOCUMENTS.
10. PROVIDE KNOCKOUTS IN PRECAST STORM DRAIN STRUCTURES FOR ALL PIPES SHOWN ON THE PLANS.
10. ONLY HORIZONTAL ELBOW FITTINGS (BENDS) ARE SHOWN ON THE PLANS. ADDITIONAL FITTINGS WILL BE REQUIRED FOR VERTICAL DEFLECTIONS NEAR CONNECTION TO EXISTING PIPES, AND AT OTHER LOCATIONS REQUIRING GRADE CHANGES TO AVOID CONFLICTS.
11. THE CONTRACTOR SHALL NOT STORE MATERIALS OR EQUIPMENT OR OPERATE EQUIPMENT WITH ITS TRACKS OR WHEELS PLACED ON PRIVATE PROPERTY WITHOUT THE WRITTEN APPROVAL OF THE PROPERTY OWNER.
11. THE CONTRACTOR SHALL NOTIFY CBJ WATER UTILITIES OPERATOR LONI VANKIRK (723-4975) OF PROPOSED WATER SERVICE INTERRUPTION AND SUBMIT THE "WATER SYSTEM SPECIAL USE PERMIT" (COSIGNED BY THE ENGINEER) AT LEAST 48-HOURS PRIOR TO SHUTDOWN OR FLUSHING OF MAINLINE WATER PIPE. NO WATER SERVICE INTERRUPTION MAY PROCEED UNTIL THIS APPROVAL IS OBTAINED
12. CONTRACTOR SHALL REFERENCE ALL EXISTING PROPERTY CORNER MONUMENTS (I.E. BRASS CAP MONUMENTS, REBARS OR CHISELED X'S) PRIOR TO CONSTRUCTION THAT WILL BE DISTURBED DURING HIS WORK, AND REMONUMENT AFTER CONSTRUCTION OPERATIONS. ALL WORK SHALL BE DONE BY, OR UNDER THE DIRECTION OF, AN ALASKA REGISTERED LAND SURVEYOR. ALL EXISTING PROPERTY CORNERS ARE NOT NECESSARILY SHOWN ON THE PLANS.
13. THE PLAN DRAWINGS DO NOT NECESSARILY SHOW ALL TREES AND SHRUBS THAT MAY BE ENCOUNTERED DURING CONSTRUCTION ACTIVITIES. NO TREES, SHRUBS OR LANDSCAPING ARE TO BE REMOVED OR DAMAGED, UNLESS SHOWN ON THE DRAWINGS OR DIRECTED BY THE ENGINEER.
14. "JUMPING JACK", OR SIMILAR TYPE COMPACTORS SHALL BE USED FOR COMPACTION WITHIN 18-INCHES OF THE OUTSIDE SURFACE OF ALL WATER VALVE BOXES, CATCH BASINS AND MANHOLES.
15. THE USE OF GROUT AND QUICKSET CEMENT PRODUCTS WITH ADJUSTING RINGS, BRICKS, WOOD, STONES AND OTHER SIMILAR GRADE ADJUSTMENT DEVICES TO SUPPORT CATCH BASIN FRAMES OVER CATCH BASINS AND MANHOLES WILL NOT BE PERMITTED ON THIS PROJECT. SEE CBJ STANDARD SPECIFICATIONS, SECTION 02502 - STORM SEWER MANHOLES, INLETS AND CATCH BASINS AND THE DRAWINGS FOR CATCH BASIN FRAME SUPPORT REQUIREMENTS. SANITARY SEWER MANHOLES SHALL BE ADJUSTED PER CBJ STANDARD SPECIFICATIONS 02402 - SANITARY SEWER MANHOLES AND CLEANOUTS.
16. THE CONTRACTOR SHALL INSTALL AND MAINTAIN ENGINEER APPROVED EROSION CONTROL DEVICES DURING CONSTRUCTION PER CBJ STANDARD SPECIFICATIONS SECTION 01570 REQUIREMENTS.
17. ALL WORK FOR THESE PLANS SHALL BE CONDUCTED IN STRICT ACCORDANCE WITH APPLICABLE LOCAL, STATE AND FEDERAL LAWS AND STANDARDS.

ABBREVIATIONS

AC	ASBESTOS CEMENT
ACS	ALASKA COMMUNICATIONS SYSTEMS
AEL&P	ALASKA ELECTRIC LIGHT & POWER
APPROX	APPROXIMATE
AST	ABOVEGROUND STORAGE TANK
BC	BACK OF CURB
BLVD	BOULEVARD
BOP	BEGINNING OF PROJECT
CB	CATCH BASIN
CBJ	CITY & BOROUGH OF JUNEAU
CHB	CHORD BEARING
CHL	CHORD LENGTH
C/L	CENTERLINE
CI	CAST IRON
CLR	CLEAR
CMP	CORRUGATED METAL PIPE
CONC	CONCRETE
CONT	CONTINUOUS
CPP	CORRUGATED POLYETHYLENE PIPE
CTE	CONNECT TO EXISTING
DI	DUCTILE IRON
DIP	DUCTILE IRON PIPE
DIA	DIAMETER
E	EASTING
EG	EXISTING GRADE
EL	ELEVATION
EOP	END OF PROJECT
EP	EDGE OF PAVEMENT
EXIST	EXISTING
EXP	EXPANSION
FG	FINISH GRADE
FH	FIRE HYDRANT
FL	FLOW LINE
GCI	GENERAL COMMUNICATION INC.
GV	GATE VALVE
HDPE	HIGH DENSITY POLYETHYLENE
HP	HIGH PRESSURE
IE	INVERT ELEVATION
L	LENGTH
LP	LOW POINT
LT	LEFT
MAX	MAXIMUM
MIN	MINIMUM
MJ	MECHANICAL JOINT
MTE	MATCH TO EXISTING
N	NORTHING
N/A	NOT APPLICABLE
NFS	NON-FROST SUSCEPTIBLE
NTS	NOT TO SCALE
NVC	NO VERTICAL CURVE
OC	ON CENTER
PC	POINT OF CURVATURE
PERF	PERFORATED
PI	POINT OF INTERSECTION
P/L	PROPERTY LINE
POC	POINT ON CURVE
POL	POINT ON LINE
PP	POWER POLE
PT	POINT OF TANGENCY
PVC	POLYVINYL CHLORIDE
R	RADIUS
ROW	RIGHT-OF-WAY
RP	RADIUS POINT
RT	RIGHT
SDMH	STORM DRAIN MANHOLE
SS	SANITARY SEWER
SSCO	SANITARY SEWER CLEANOUT
SSMH	SANITARY SEWER MANHOLE
STA	STATION
STD	STANDARD
SWPPP	STORM WATER POLLUTION PREVENTION PLAN
T	TANGENT
TBG	TOP BACK OF GUTTER
TBM	TEMPORARY BENCH MARK
TC	TOP OF CONCRETE
TOB	TOP OF BANK
TOP	TOP OF PIPE
TYP	TYPICAL
UD	UNDERDRAIN
UON	UNLESS OTHERWISE NOTED
UST	UNDERGROUND STORAGE TANK
VC	VERTICAL CURVE
VERT	VERTICAL
VPI	VERTICAL POINT OF INTERSECTION
W/	WITH

SYMBOLS

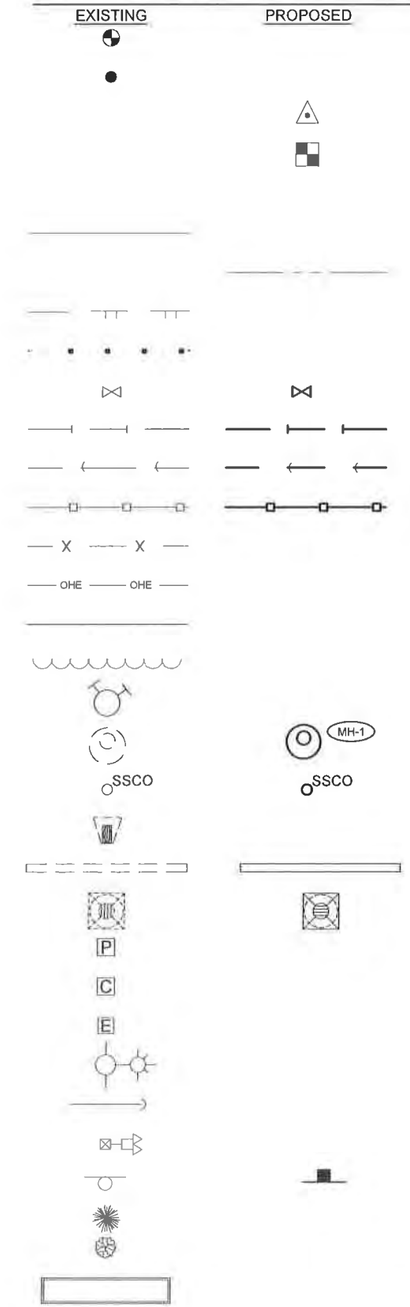

PRIMARY MONUMENT
SECONDARY MONUMENT
SURVEY SPIKE / MAG NAIL
TEMPORARY BENCHMARK
PROPERTY / BOUNDARY LINE
PROPERTY / BOUNDARY LINE UNSURVEYED
PROJECT BASELINE
TOP OF BANK
TOE OF SLOPE
WATER GATE VALVE/CURB STOP
WATER LINE/SERVICE
SEWER LINE/SERVICE
WOODEN FENCE
CHAIN-LINK FENCE
OVERHEAD ELECTRIC LINE
ASPHALT PAVEMENT
TREE LINE
FIRE HYDRANT
SANITARY SEWER MANHOLE
SANITARY SEWER CLEANOUT
CONCRETE HEADWALL W/ TRASH RACK
STORM SEWER PIPE
CATCH BASIN W/ AREA DRAIN
TELEPHONE PEDESTAL
CABLE PEDESTAL
ELECTRICAL PEDESTAL
POWER POLE WITH LIGHT
GUY WIRE
GANG STYLE MAILBOX
STREET SIGN
CONIFEROUS TREE
DECIDUOUS TREE
BUILDING FOUNDATION

DESIGN MSM
DRAWN MSM
CHECK JMP
APPROVED JMP
FILE:

No.	DATE	REVISION	BY	APRVD.

DELTA DRIVE SUBDIVISION

JUNEAU, AK

BICKNELL INC. QUALITY CONSTRUCTION

STATE OF ALASKA 49TH Joseph M. Pusich CE 8152 REGISTERED PROFESSIONAL ENGINEER 12/03/20

PDC ENGINEERS
PLAN • DESIGN • CONSTRUCT
A BESPEC COMPANY
9109 Mendenhall Mall Rd. Ste. 4, Juneau, AK 99801
907.780.6060 | AECC605

GENERAL NOTES, ABBREVIATIONS AND SYMBOLS

DATE: Dec 03, 2020
PDC No. 20098JN

SHEET C002

P:\2020\20098JN-Biennell_Delta\C\C000\dwg\C000\20098JN.dwg PLOT: December 03, 2020 at: 3:56pm Micki Minich

WATER SERVICE SUMMARY

LOT No.	STATION & OFFSET	SIZE/TYPE	REMARKS
2	10+95.1, 13.5' LT	1" POLY	SEE NOTE 1
3	11+28.9, 13.5' LT	1" POLY	SEE NOTE 1
4	11+81.8, 13.5' LT	1" POLY	SEE NOTE 1
5	12+15.3, 13.5' LT	1" POLY	SEE NOTE 1
6	12+58.8, 21.4' LT	1" POLY	SEE NOTE 1
7	11+68.0, 13.4' RT	1" POLY	NEW SERVICE
8	12+28.0, 13.5' RT	1" POLY	NEW SERVICE
9	14+71.4, 13.4' RT	1" POLY	NEW SERVICE
10	14+11.4, 13.3' RT	1" POLY	NEW SERVICE
11	15+22.0, 18.1' LT	1" POLY	SEE NOTE 1
12	14+96.0, 13.5' LT	1" POLY	SEE NOTE 1
13	14+62.5, 13.5' LT	1" POLY	SEE NOTE 1
14	14+09.2, 13.5' LT	1" POLY	SEE NOTE 1
15	13+85.5, 21.6' LT	1" POLY	SEE NOTE 1

NOTES:

1. EXISTING FOUNDATION PADS REPORTED TO HAVE 3/4" POLY WATER SERVICES TO EACH UNIT. EXISTING WATER SERVICES MAY BE REUSED IF FOUND TO BE IN SATISFACTORY CONDITION. FLUSHING, DISINFECTION AND PRESSURE TESTING SHALL BE PERFORMED ON THE EXISTING 3/4" POLY WATER SERVICES.

STORM DRAIN STRUCTURE FRAME & GRATE SUMMARY

STRUCTURE No.	EAST JORDAN, OLYMPIC FOUNDRY Co., CBJ STANDARD No., OR APPROVED EQUAL
S-1	OLYMPIC FOUNDARY MH34SC

SEWER SERVICE SUMMARY

LOT No.	STATION & OFFSET	SIZE/TYPE	REMARKS
2	10+82.7, 14.0' LT	4" PVC	SEE NOTE 1
3	11+16.6, 14.0' LT	4" PVC	SEE NOTE 1
4	11+71.4, 14.0' LT	4" PVC	SEE NOTE 1
5	12+02.3, 14.0' LT	4" PVC	SEE NOTE 1
6	12+52.1, 14.0' LT	4" PVC	SEE NOTE 1
7	11+38.0, 14.5' RT	4" PVC	NEW SERVICE
8	11+98.0, 14.5' RT	4" PVC	NEW SERVICE
9	15+01.5, 14.5' RT	4" PVC	NEW SERVICE
10	14+41.4, 14.5' RT	4" PVC	NEW SERVICE
11	15+27.7, 14.0' LT	4" PVC	SEE NOTE 1
12	15+07.9, 14.0' LT	4" PVC	SEE NOTE 1
13	14+77.6, 14.0' LT	4" PVC	SEE NOTE 1
14	14+22.8, 14.0' LT	4" PVC	SEE NOTE 1
15	13+92.1, 14.0' LT	4" PVC	SEE NOTE 1

NOTES:

1. SEWER SERVICE LOCATIONS SHOWN ARE FROM LIMITED AS-BUILT INFORMATION AND WERE NOT FIELD LOCATED. EXISITNG 4" PVC SEWER SERVICES EXIST FOR LOTS 2-6 AND LOTS 11-15. CONTRACTOR SHALL FIELD LOCATE ALL SEWER SERVICES TO CONFIRM FINAL LOCATION FOR NEW SEWER SERVICE CLEANOUT INSTALLATION. STATION & OFFSET ARE GIVEN TO THE CENTER OF THE NEW CLEANOUT LID. IF EXISTING SANITARY SEWER SERVICES FOUND TO BE IN GOOD CONDITION CONTRACTOR MAY KEEP THEM IN SERVICE.
2. CONSTRUCT NEW 4" PVC SEWER SERVICE AND INSTALL NEW CLEANOUT NEAR PROPERTY LINE PER CBJ STANDARD DETAIL 213 AND CONNECT TO EXISTING SEWER SERVICE.
3. ADJUST SEWER SERVICE SLOPE TO PROVIDE MAXIMUM SEPARATION BETWEEN UTILITY CROSSINGS. INSTALL SWEEPS AS REQUIRED UPON APPROVAL OF THE ENGINEER.

P:\2020\20098JN-Bicknell_Delta\C\C003zmsl\20098JN.dwg PLOT: December 03, 2020 at: 3:58pm Micki Minsch

DESIGN MSM
DRAWN MSM
CHECK JMP
APPROVED JMP
FILE

No.	DATE	REVISION	BY	APRVD.

DELTA DRIVE SUBDIVISION

JUNEAU, AK

BICKNELL INC. QUALITY CONSTRUCTION

STATE OF ALASKA 49TH Joseph M. Pusich CE 8152 REGISTERED PROFESSIONAL ENGINEER 12/03/20

PDC ENGINEERS
PLAN • DESIGN • CONSTRUCT
A BESPEC COMPANY
9109 Mendenhall Mall Rd. Ste. 4, Juneau, AK 99801
907.780.6060 | AECC605

SUMMARY TABLES

DATE: Dec 03, 2020
PDC No. 20098JN

SHEET C003

SURVEY NOTES

1. THE PURPOSE OF THIS SURVEY IS TO PROVIDE A TOPOGRAPHIC DESIGN SURVEY OF THE DELTA DRIVE DEVELOPMENT
2. THE FIELD SURVEYS WERE PERFORMED ON MAY 26-27, 2020.
3. THE SURVEY EQUIPMENT UTILIZED DURING THIS SURVEY WAS TRIMBLE R8-2 GNSS ROVER AND BASE AND A TRIMBLE S-7 ROBOTIC TOTAL STATION UTILIZING STANDARD LASER MEASURING TECHNIQUES.
4. ALL DISTANCES AND DIMENSIONS ARE IN U S. SURVEY FEET AND REDUCED TO THEIR HORIZONTAL VALUES.
5. CONTROL AND MONUMENT COORDINATES ARE IN AN ASSUMED LOCAL COORDINATE SYSTEM.
6. ELEVATIONS ARE IN AN ASSUMED LOCAL VERTICAL DATUM.
7. CONTOURS ARE SHOWN AT 1-FOOT INTERVALS.
8. ALL UTILITIES WERE LOCATED BY PDC AND ARE BASED ON OBSERVABLE EVIDENCE AND ABOVE GROUND APPURTENANCES AND FIELD RETRACEMENT PERFORMED BY PDC.
9. THIS SURVEY DOES NOT CONSTITUTE A SUBDIVISION AS PER ALASKA STATUTE 40.15.900(5)(a).

EXIST. SSCO	(CO1)
STA 10+04.9,	33.3 LT
EXIST. LID EL=	97.31
SW 8" (OUT) IE=	94.81

EXIST. SSMH	(M1)
STA 08+90.8,	25.9 RT
EXIST. LID EL=	98.50
E 6" (IN) IE=	92.94
NW 8" (OUT) IE=	92.84

NOTES:
1. ROADWAY AND UTILITY INFORMATION SHOWN ON DELTA DRIVE IS PROPOSED FROM CBJ CONTRACT BE21-028 "DELTA DRIVE RECONSTRUCTION." WORK IS SCHEDULED FOR SPRING/SUMMER 2021.
2. EXISTING 6" PVC SEWER MAIN AND 2" POLY PIPE FOR DOMESTIC WATER EXIST ON SITE.

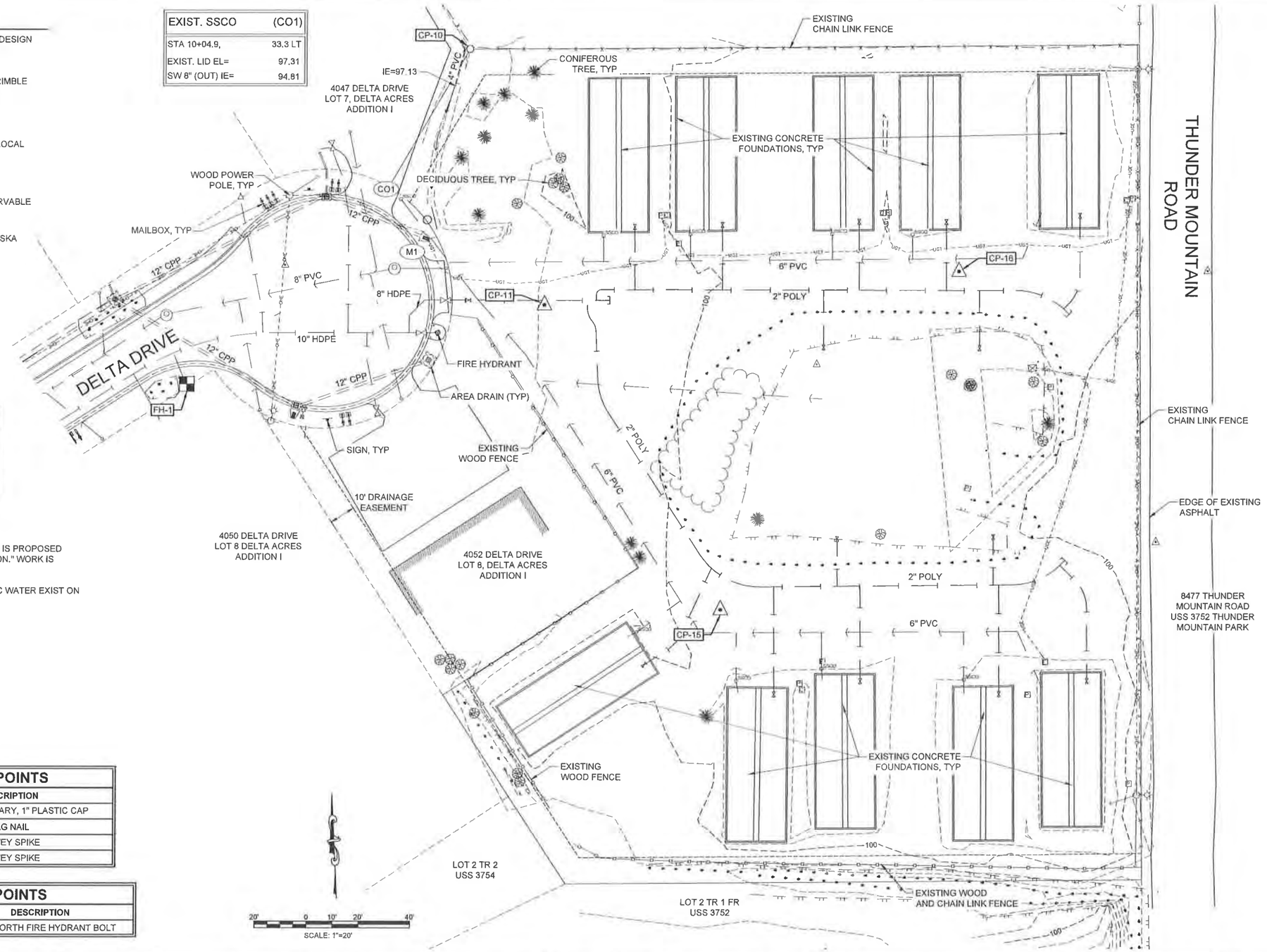

TABLE OF HORIZONTAL CONTROL POINTS

POINT #	NORTHING	EASTING	DESCRIPTION
CP 10	10112.63	10356.34	S-3650, SECONDARY, 1" PLASTIC CAP
CP 11	10014.23	10385.34	MAG NAIL
CP 15	9896.49	10453.74	SURVEY SPIKE
CP 16	10027.18	10545.16	SURVEY SPIKE

TABLE OF VERTICAL CONTROL POINTS

POINT #	NORTHING	EASTING	ELEVATION	DESCRIPTION
FH-1	9983.52	10247.42	100.44'	"X" ON NORTH FIRE HYDRANT BOLT

P:\2020\20098JN-Bicknell_Delta\C\20098JN-Bicknell_Delta C-20098JN.dwg PLOT: December 03, 2020 at: 3:56pm Mark.Minsch

DESIGN MSM
DRAWN MSM
CHECK JMP
APPROVED JMP
FILE:

No.	DATE	REVISION	BY	APRVD.

DELTA DRIVE SUBDIVISION

JUNEAU, AK

BICKNELL INC. QUALITY CONSTRUCTION

STATE OF ALASKA 49TH Joseph M. Pusich CE 8152 REGISTERED PROFESSIONAL ENGINEER 12/03/20

PDC ENGINEERS
PLAN • DESIGN • CONSTRUCT
A HESPEC COMPANY
9109 Mendenhall Mall Rd. Ste. 4, Juneau, AK 99801
907.780.6060 | AECC605

EXISTING SITE CONDITIONS

DATE: Dec 03, 2020
PDC No. 20098JN

SHEET
C004

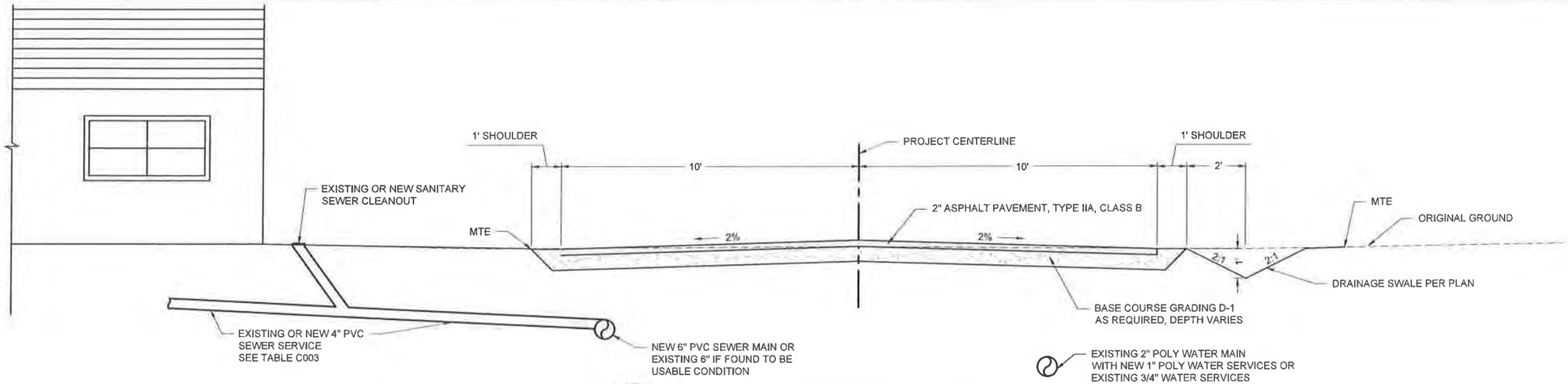

1 / 100 **ROADWAY TYPICAL SECTION**
SCALE: NTS

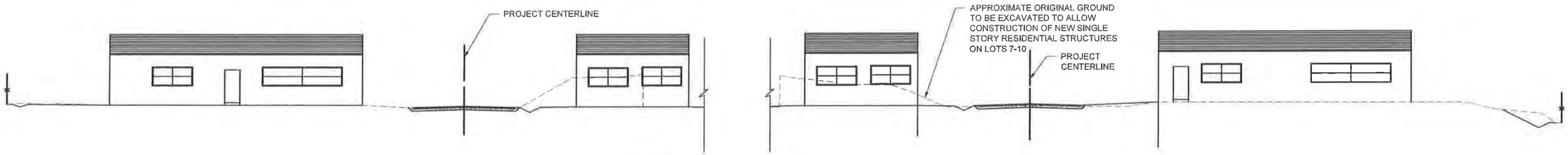

2 / C100 **SITE TYPICAL SECTION**
SCALE: NTS

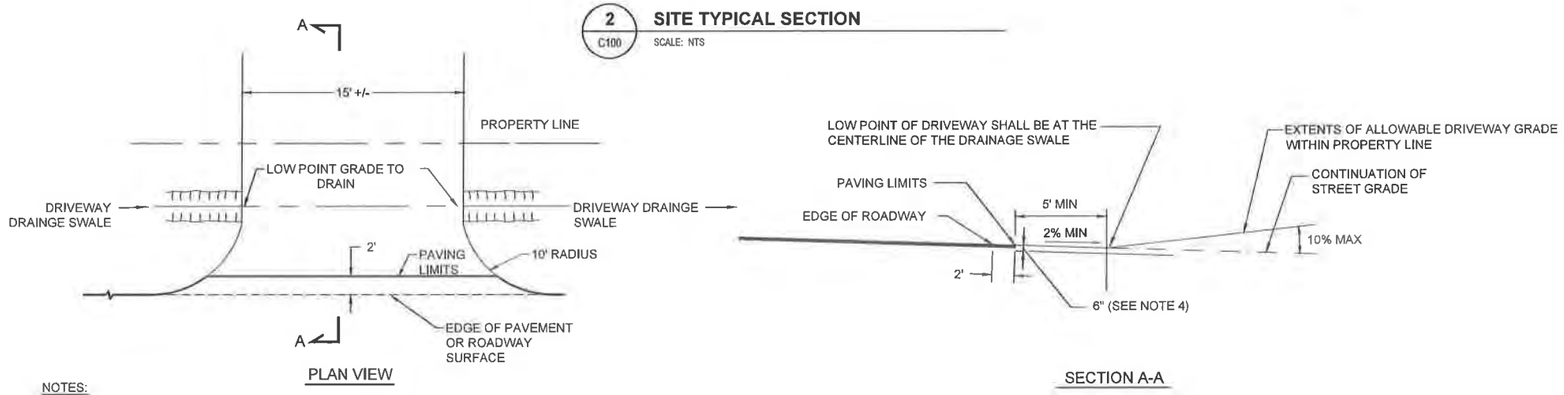

NOTES:

1. PAVING LIMIT FOR DRIVEWAYS SHALL BE 2' FROM THE EDGE OF ROADWAY OR AS APPROVED BY THE ENGINEER.
2. DRIVEWAY SWALE SHALL BE GRADED TO DRAIN INTO DRAINAGE SWALE

3 / C100 **TYPICAL DRIVEWAY SWALE DETAIL**
SCALE: NTS

SHEET C100 NOTES:

1. EXISTING 2" POLY WATER LINE WILL BE FLUSHED, DISINFECTED AND PRESSURE TESTED IN ACCORDANCE WITH CBJ STANDARD SPECIFICATIONS TO ENSURE COMPLIANCE WITH PUBLIC DRINKING WATER REGULATIONS.

P:\2020\20098JN-Bicknell_Delta\CC\20098JN.dwg PLOT: December 03, 2020 at 3:59pm Mitch.Mirsch

DESIGN	MSM
DRAWN	MSM
CHECK	JMP
APPROVED	JMP
FILE:	

No.	DATE	REVISION	BY	APRVD.

DELTA DRIVE SUBDIVISION

JUNEAU, AK

BICKNELL INC. QUALITY CONSTRUCTION

STATE OF ALASKA 49TH Joseph M. Pusich CE 8152 REGISTERED PROFESSIONAL ENGINEER 12/03/20

PDC ENGINEERS
PLAN • DESIGN • CONSTRUCT
A RESPEC COMPANY
9109 Mendenhall Mall Rd. Ste. 4, Juneau, AK 99801
907.780.6060 | AECC605

TYPICAL SECTIONS

DATE: Dec 03, 2020
PDC No. 20098JN

SHEET C100

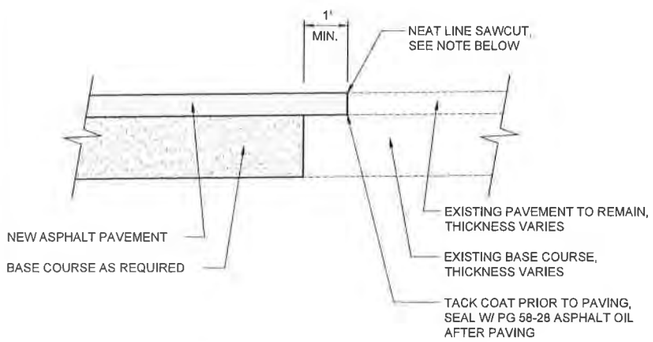

NOTE:
SAWCUT OF EXISTING PAVEMENT SHALL NOT BE MADE UNTIL 24 HOURS PRIOR TO FINAL PAVING.

1 / C101 PAVEMENT MATCH DETAIL
SCALE: NTS

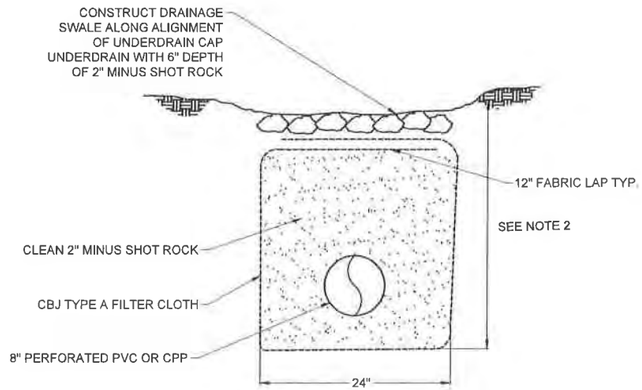

NOTES:
1. OUTFALL CONNECTIONS TO DAYLIGHT NEAR CULVERT INLETS PER PLAN.
2. DEPTH OF UNDERDRAIN VARIES, MIN SLOPE=0.50%

2 / C101 8" UNDERDRAIN DETAIL
SCALE: NTS

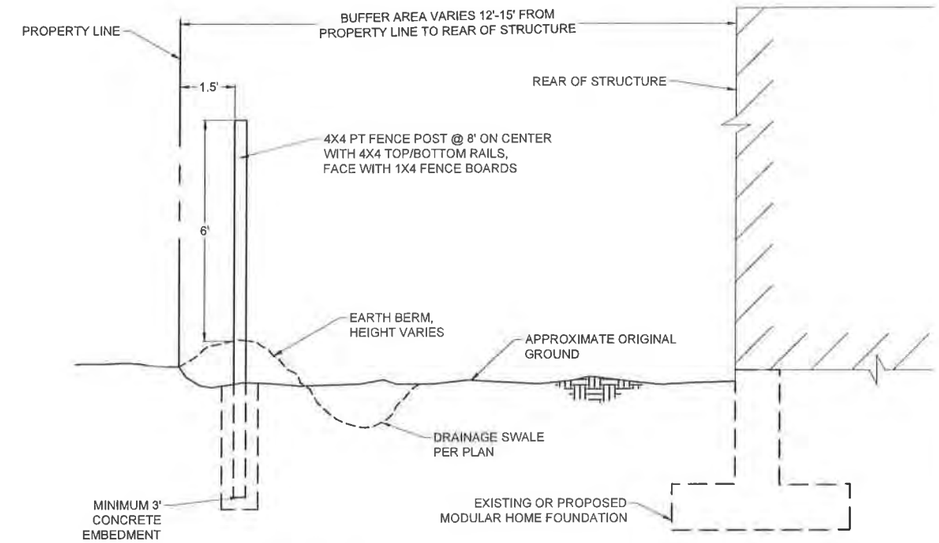

3 / C101 TYPICAL FENCE AT REAR OF DWELLING
SCALE: 1"=2'

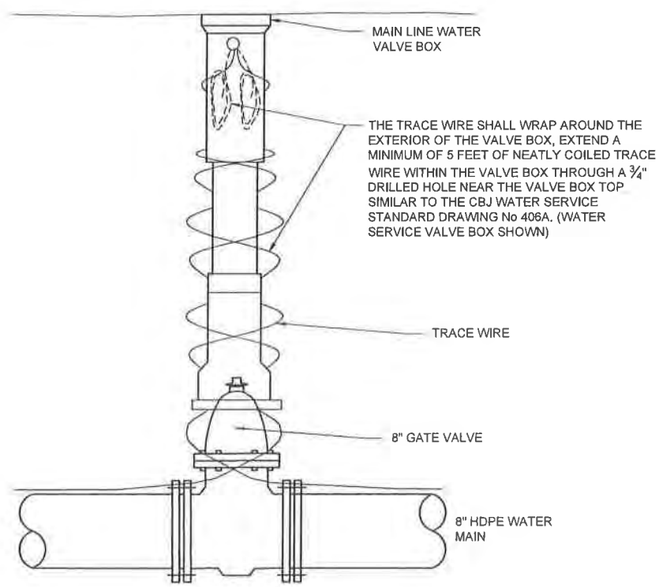

4 / C101 MAIN LINE VALVE TRACE WIRE TERMINATION DETAIL
SCALE: NTS

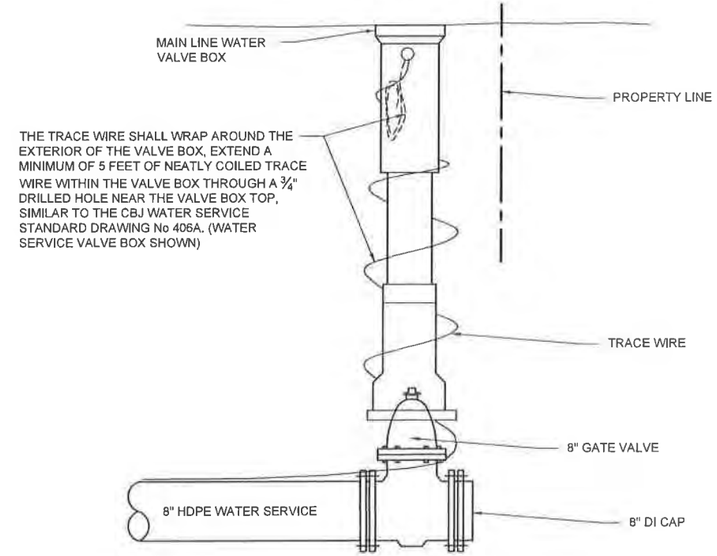

5 / C101 WATER SERVICE VALVE TRACE WIRE TERMINATION DETAIL
SCALE: NTS

P:\2020\20098JN\Bisnet_Delta\C-C3001mod20098JN.dwg PLOT: December 03, 2020 at: 3:59pm Micki Minich

DESIGN MSM
DRAWN MSM
CHECK JMP
APPROVED JMP
FILE:

No.	DATE	REVISION	BY	APRVD.

DELTA DRIVE SUBDIVISION
JUNEAU, AK

BICKNELL INC. QUALITY CONSTRUCTION

STATE OF ALASKA 49TH Joseph M. Pusich CE 8152 REGISTERED PROFESSIONAL ENGINEER 12/03/20

PDC ENGINEERS
PLAN • DESIGN • CONSTRUCT
A NESPEC COMPANY
9109 Mendenhall Mall Rd. Ste. 4, Juneau, AK 99801
907.780.6060 | AECC605

CONSTRUCTION DETAILS

DATE: Dec 03, 2020
PDC No. 20098JN
SHEET C101

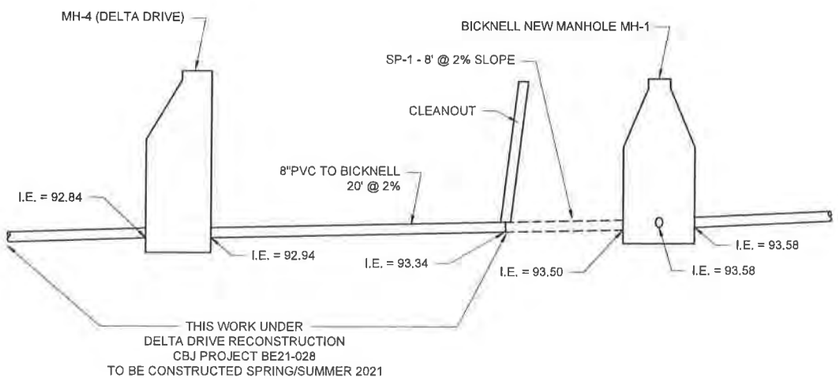

1 / C102 **SEWER PROFILE CONNECTION**

SCALE: NTS

P:\2020\20098JN-Bicknell_Delta\C-C\C300\mc20098JN.dwg PLOT: December 03, 2020 at: 3:51pm Mark.Minnich

DESIGN	MSM
DRAWN	MSM
CHECK	JMP
APPROVED	JMP
FILE:	

No.	DATE	REVISION	BY	APRVD.

DELTA DRIVE SUBDIVISION

JUNEAU, AK

BICKNELL INC. QUALITY CONSTRUCTION

STATE OF ALASKA 49TH Joseph M. Pusich CE 8152 REGISTERED PROFESSIONAL ENGINEER 12/03/20

PDC ENGINEERS
PLAN • DESIGN • CONSTRUCT
A DESPEC COMPANY
9109 Mendenhall Mall Rd. Ste. 4, Juneau, AK 99801
907.780.6060 | AECC605

CONSTRUCTION DETAILS

DATE: Dec 03, 2020
PDC No. 20098JN

SHEET C102

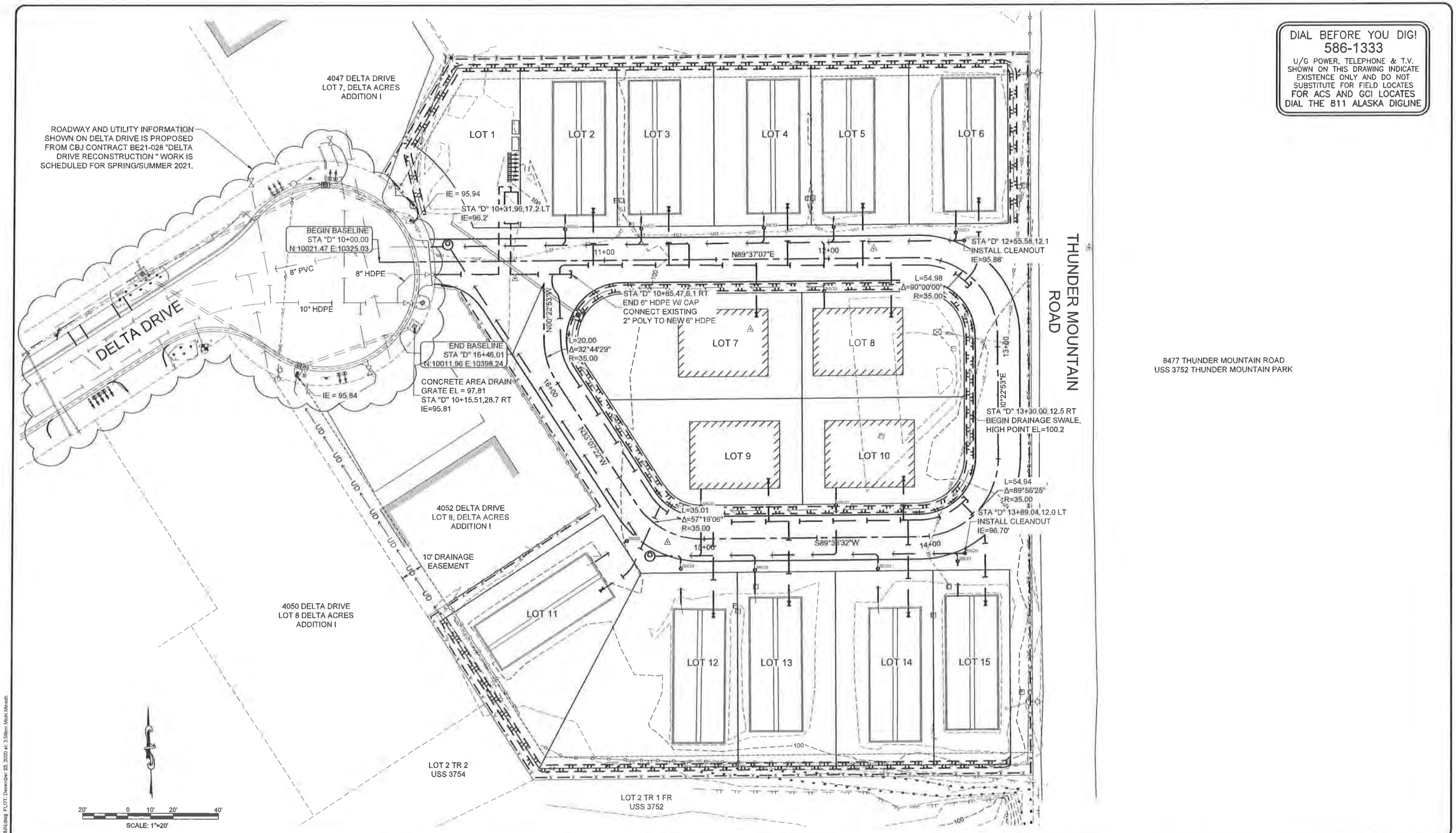

DESIGN MSM				
DRAWN MSM				
CHECK JMP				
APPROVED JMP				
FILE:	No.	DATE	REVISION	BY	APRVD.

DELTA DRIVE SUBDIVISION

JUNEAU, AK

BICKNELL INC. QUALITY CONSTRUCTION

STATE OF ALASKA 49TH Joseph M. Pusich CE 8152 REGISTERED PROFESSIONAL ENGINEER 12/03/20

PDC ENGINEERS
PLAN • DESIGN • CONSTRUCT
A RESPEC COMPANY
9109 Mendenhall Mall Rd. Ste. 4, Juneau, AK 99801
907.780.6060 | AECC605

OVERALL SITE PLAN

DATE: Dec 03, 2020
PDC No. 20098JN

SHEET C200

P:\2020\20098JN-Bicknell_Delta\C-200\1cm\20098JN.dwg PLOT: December 03, 2020 at: 3:59pm Micki Minch

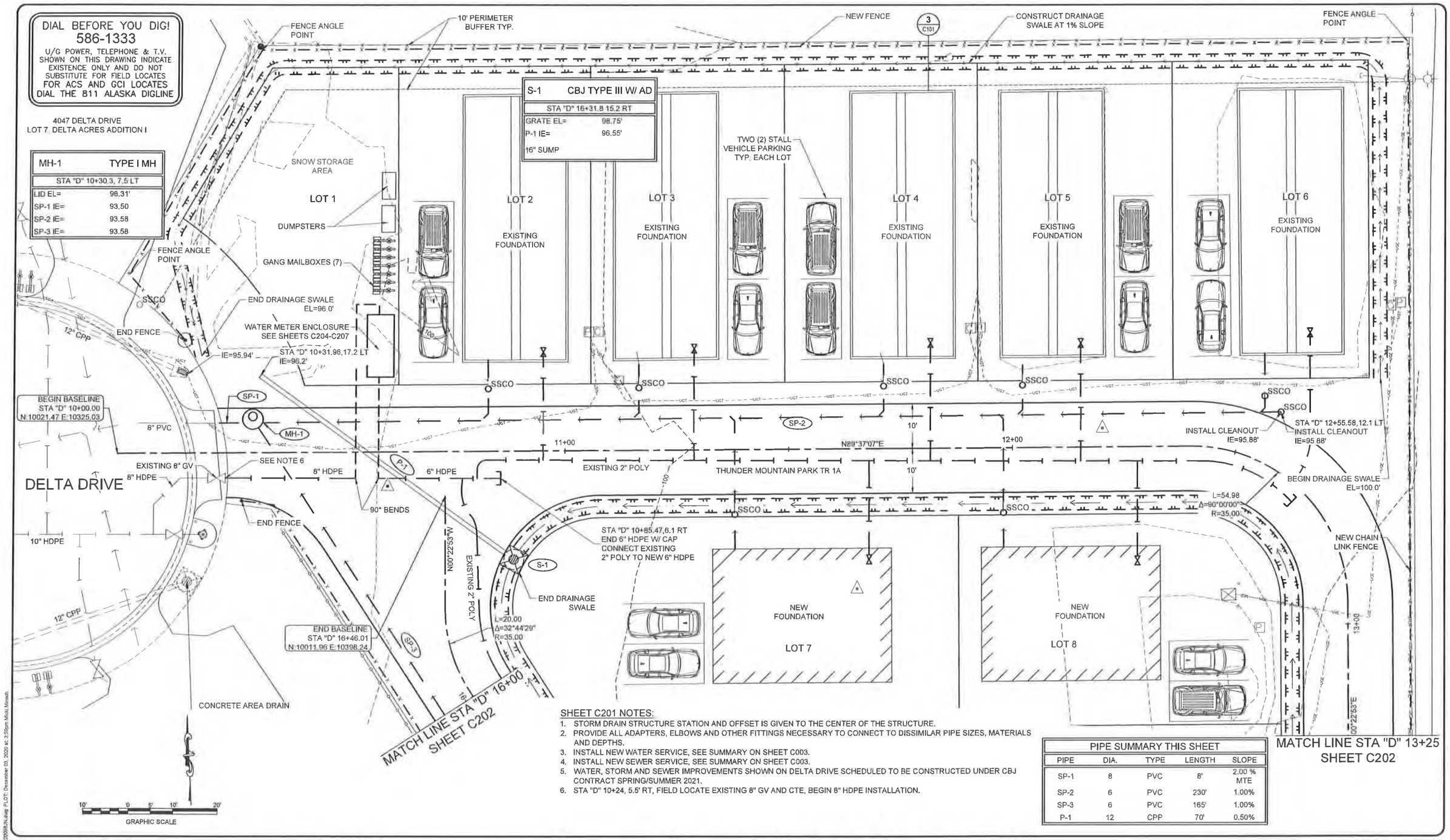

SHEET C201 NOTES:

1. STORM DRAIN STRUCTURE STATION AND OFFSET IS GIVEN TO THE CENTER OF THE STRUCTURE.
2. PROVIDE ALL ADAPTERS, ELBOWS AND OTHER FITTINGS NECESSARY TO CONNECT TO DISSIMILAR PIPE SIZES, MATERIALS AND DEPTHS.
3. INSTALL NEW WATER SERVICE, SEE SUMMARY ON SHEET C003.
4. INSTALL NEW SEWER SERVICE, SEE SUMMARY ON SHEET C003.
5. WATER, STORM AND SEWER IMPROVEMENTS SHOWN ON DELTA DRIVE SCHEDULED TO BE CONSTRUCTED UNDER CBJ CONTRACT SPRING/SUMMER 2021.
6. STA "D" 10+24, 5.5' RT, FIELD LOCATE EXISTING 8" GV AND CTE, BEGIN 8" HDPE INSTALLATION.

PIPE SUMMARY THIS SHEET

PIPE	DIA.	TYPE	LENGTH	SLOPE
SP-1	8	PVC	8'	2.00 % MTE
SP-2	6	PVC	230'	1.00%
SP-3	6	PVC	165'	1.00%
P-1	12	CPP	70'	0.50%

DESIGN MSM
DRAWN MSM
CHECK JMP
APPROVED JMP
FILE:

No.	DATE	REVISION	BY	APRVD.

DELTA DRIVE SUBDIVISION

JUNEAU, AK

BICKNELL INC. QUALITY CONSTRUCTION

STATE OF ALASKA 49TH Joseph M. Pusich CE 8152 REGISTERED PROFESSIONAL ENGINEER 12/03/20

PDC ENGINEERS
PLAN • DESIGN • CONSTRUCT
A NESPEC COMPANY
9109 Mendenhall Mall Rd. Ste. 4, Juneau, AK 99801
907.780.6060 | AECC605

SITE & UTILITY PLAN

DATE: Dec 03, 2020
PDC No. 20098.JN
SHEET C201

P:\2020\20098JN-Bicknell_Delta\C\20091cmd\C0098JN-Ikwg PLOT: December 03, 2020 at: 3:59pm Mick Minsch

SHEET C202 NOTES:

1. STORM DRAIN STRUCTURE STATION AND OFFSET IS GIVEN TO THE CENTER OF THE STRUCTURE FRAME ELEVATION IS GIVEN TO THE TOP, FRONT OF FRAME.
2. PROVIDE ALL ADAPTERS, ELBOWS AND OTHER FITTINGS NECESSARY TO CONNECT TO DISSIMILAR PIPE SIZES, MATERIALS AND DEPTHS.
3. INSTALL NEW WATER SERVICE, SEE SUMMARY ON SHEET C003.
4. INSTALL NEW SEWER SERVICE, SEE SUMMARY ON SHEET C003.

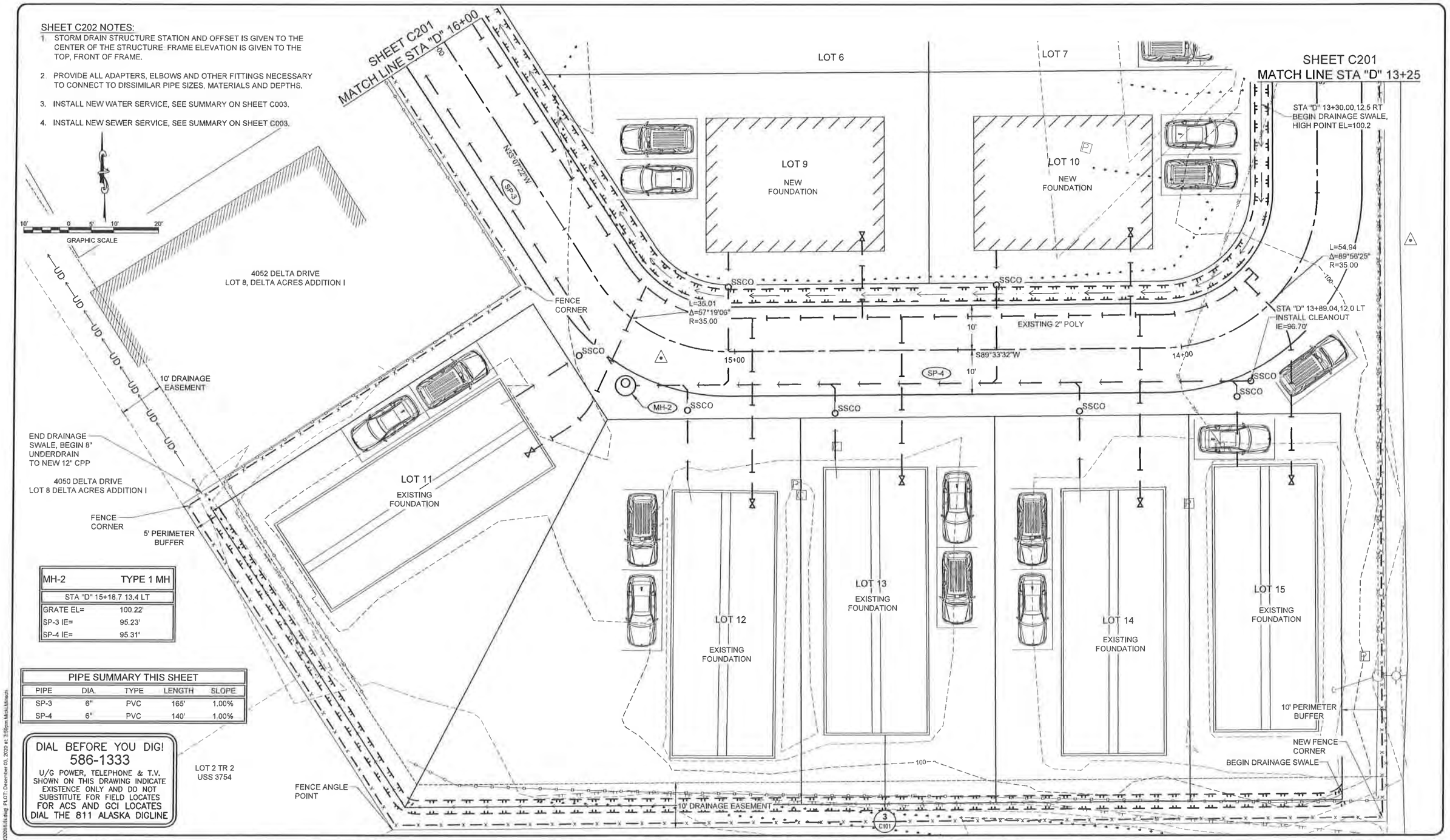

MH-2	TYPE 1 MH
STA "D" 15+18.7 13.4 LT	
GRATE EL=	100.22'
SP-3 IE=	95.23'
SP-4 IE=	95.31'

PIPE SUMMARY THIS SHEET				
PIPE	DIA.	TYPE	LENGTH	SLOPE
SP-3	6"	PVC	165'	1.00%
SP-4	6"	PVC	140'	1.00%

DIAL BEFORE YOU DIG!
586-1333
U/G POWER, TELEPHONE & T.V. SHOWN ON THIS DRAWING INDICATE EXISTENCE ONLY AND DO NOT SUBSTITUTE FOR FIELD LOCATES
FOR ACS AND GCI LOCATES DIAL THE 811 ALASKA DIGLINE

DESIGN MSM
DRAWN MSM
CHECK JMP
APPROVED JMP
FILE:

No.	DATE	REVISION	BY	APRVD.

DELTA DRIVE SUBDIVISION

JUNEAU, AK

BICKNELL INC. QUALITY CONSTRUCTION

STATE OF ALASKA 49TH Joseph M. Pusich CE 8152 REGISTERED PROFESSIONAL ENGINEER 12/03/20

PDC ENGINEERS
PLAN • DESIGN • CONSTRUCT
A NESPEC COMPANY
9109 Mendenhall Mall Rd. Ste. 4, Juneau, AK 99801
907.780.6060 | AECC605

SITE & UTILITY PLAN

DATE: Dec 03, 2020
PDC No. 20098JN

SHEET C202

P:\2020\20098JN-Bicknell_Delta\C-C202\Desc\20098JN.dwg PLOT: December 03, 2020 at: 3:56pm Mindy.Mintach

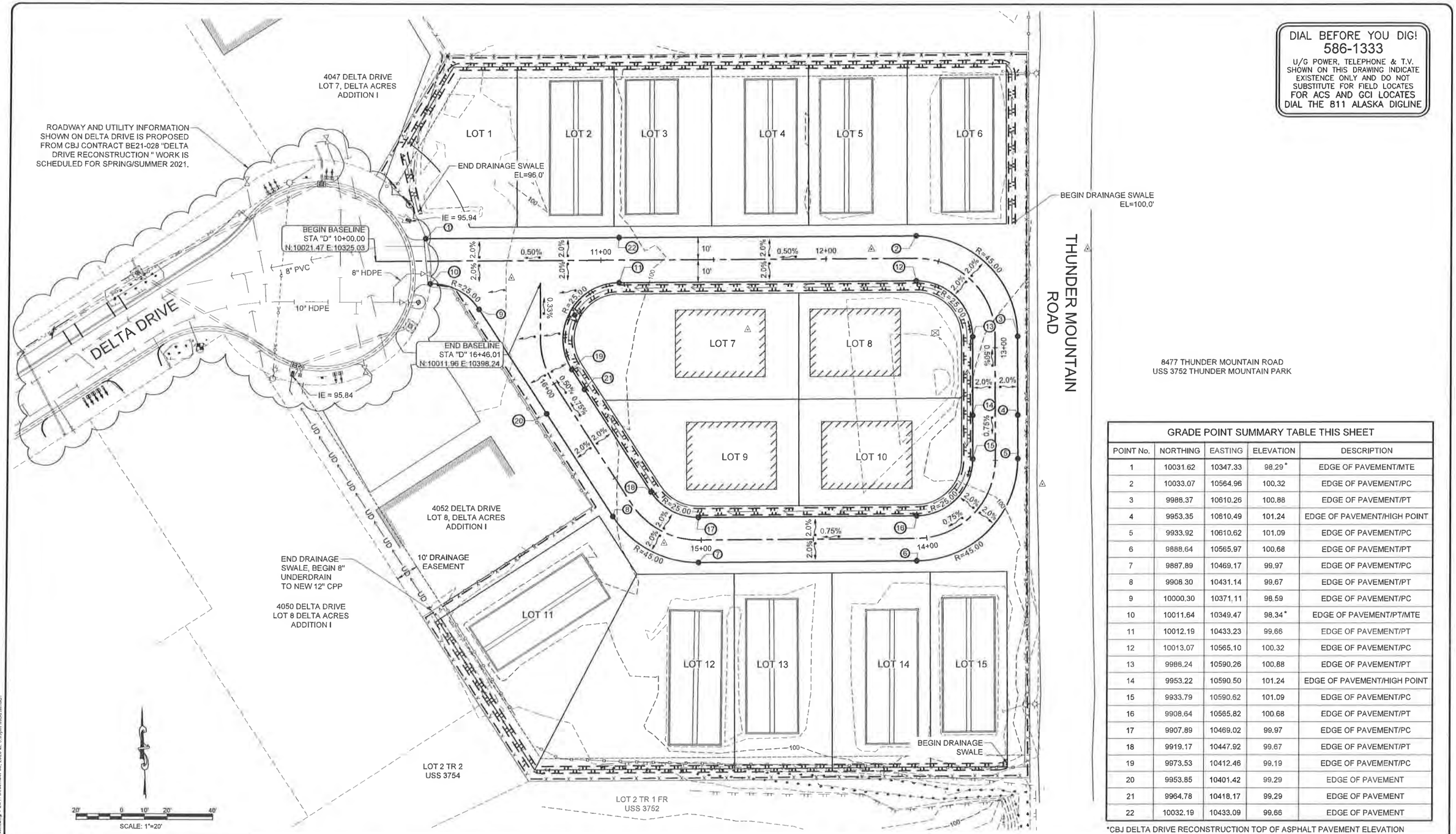

GRADE POINT SUMMARY TABLE THIS SHEET				
POINT No.	NORTHING	EASTING	ELEVATION	DESCRIPTION
1	10031.62	10347.33	98.29*	EDGE OF PAVEMENT/MTE
2	10033.07	10564.96	100.32	EDGE OF PAVEMENT/PC
3	9988.37	10610.26	100.88	EDGE OF PAVEMENT/PT
4	9953.35	10610.49	101.24	EDGE OF PAVEMENT/HIGH POINT
5	9933.92	10610.62	101.09	EDGE OF PAVEMENT/PC
6	9888.64	10565.97	100.68	EDGE OF PAVEMENT/PT
7	9887.89	10469.17	99.97	EDGE OF PAVEMENT/PC
8	9908.30	10431.14	99.67	EDGE OF PAVEMENT/PT
9	10000.30	10371.11	98.59	EDGE OF PAVEMENT/PC
10	10011.64	10349.47	98.34*	EDGE OF PAVEMENT/PT/MTE
11	10012.19	10433.23	99.66	EDGE OF PAVEMENT/PT
12	10013.07	10565.10	100.32	EDGE OF PAVEMENT/PC
13	9988.24	10590.26	100.88	EDGE OF PAVEMENT/PT
14	9953.22	10590.50	101.24	EDGE OF PAVEMENT/HIGH POINT
15	9933.79	10590.62	101.09	EDGE OF PAVEMENT/PC
16	9908.64	10565.82	100.68	EDGE OF PAVEMENT/PT
17	9907.89	10469.02	99.97	EDGE OF PAVEMENT/PC
18	9919.17	10447.92	99.67	EDGE OF PAVEMENT/PT
19	9973.53	10412.46	99.19	EDGE OF PAVEMENT/PC
20	9953.85	10401.42	99.29	EDGE OF PAVEMENT
21	9964.78	10418.17	99.29	EDGE OF PAVEMENT
22	10032.19	10433.09	99.66	EDGE OF PAVEMENT

*CBJ DELTA DRIVE RECONSTRUCTION TOP OF ASPHALT PAVEMENT ELEVATION

DESIGN MSM
DRAWN MSM
CHECK JMP
APPROVED JMP
FILE:

No.	DATE	REVISION	BY	APRVD.

DELTA DRIVE SUBDIVISION

JUNEAU, AK

BICKNELL INC. QUALITY CONSTRUCTION

STATE OF ALASKA 49TH Joseph M. Panich CE 8152 REGISTERED PROFESSIONAL ENGINEER 12/03/20

PDC ENGINEERS
PLAN • DESIGN • CONSTRUCT
A BESPEC COMPANY
9109 Mendenhall Mall Rd. Ste. 4, Juneau, AK 99801
907.780.6060 | AECC605

GRADING PLAN

DATE: Dec 03, 2020
PDC No. 2009BJN
SHEET C203

P:\2009\2009BJN-Bicknell_Delta\C-C203\cont\2009BJN.dwg PLOT: December 03, 2020 at: 3:59pm Mark Minich

NOTES:

1. CBJ SPECIFICATION 02601 - WATER SYSTEM AND 02602 - VALVES, AND OTHER CBJ STANDARD SPECIFICATIONS APPLY EXCEPT AS MODIFIED BELOW.
2. ALL JOINTS BETWEEN THE CONNECTIONS TO THE MAINLINES ON BOTH SIDES OF THE METER ENCLOSURE SHALL BE RESTRAINED.
3. ALL BOLTS, NUTS AND WASHERS SHALL BE SERIES 300 STAINLESS STEEL.
4. ALL METALLIC VALVES AND FITTINGS SHALL BE FACTORY EPOXY COATED INSIDE AND OUT, 8 MILS MINIMUM.
5. BURIED FITTINGS SHALL BE THRUST BLOCKED PER CBJ STANDARD DETAILS.
6. DIP, HDPE PIPE AND PIPE STANDS ARE PER CBJ SECTION 02602.
7. ALL PIPE AND SPOOL PIECES ABOVE GRADE ARE TO BE FLANGED, WITH 125# FLANGES USE A FLANGE ADAPTOR WITH THE CONNECTION TO HDPE.
8. GATE VALVES SHALL HAVE HAND WHEELS.
9. PRESSURE GAUGE IS TO BE STAINLESS STEEL, GLYCERIN FILLED, WITH A 3½ OR 4-INCH FACE AND 150 TO 160 PSI PRESSURE RANGE.
10. THE GATE VALVE AHEAD OF THE METER IS TO BE FLXFL, WHILE THE VALVES ON EITHER SIDE OF THE DOUBLE CHECK MAY BE FLXVIC. VALVES SHALL COMPLY WITH AWWA C509 OR C515.
11. THE METER SHALL BE A 4-INCH NEPTUNE TRUFLO COMPOUND METER WITH A STRAINER.
12. THE DOUBLE CHECK VALVE SHALL BE A 6-INCH ZURN 350A WITH THE GATE VALVES, OR APPROVED EQUAL. THE DOUBLE CHECK SHALL MEET THE REQUIREMENTS OF AWWA C510 AND BE ASSE AND NSF LISTED.
13. TWO DUPLEX 120-V ELECTRICAL OUTLETS SHALL BE INSTALLED INSIDE THE ENCLOSURE. CONDUIT SHALL RUN FROM THE EXTERIOR MOUNTED DISCONNECT BOX NEAR THE ELECTORAL METER, UNDERGROUND, AND COME UP THROUGH THE CONCRETE SLAB. THE OUTLETS SHALL BE MOUNTED ABOVE THE FLOOR AND LOCATED FOR EASY ACCESS THROUGH THE PANELS.
14. ALL ELECTRICAL WORK SHALL BE PERFORMED BY A LICENSED ELECTRICIAN AND COMPLY WITH ALL APPROPRIATE ELECTRICAL CODES. ANY REQUIRED ELECTRICAL PERMITS SHALL BE OBTAINED COORDINATE WITH THE LOCAL ELECTRICAL UTILITY AS NECESSARY AND PROVIDE ANY EQUIPMENT THEY REQUIRE TO COMPLETE THEIR SERVICE TO THIS LOCATION.

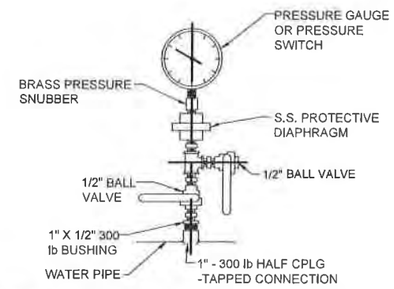

1 C204 **PRESSURE GAUGE OR SWITCH**
SCALE: NTS

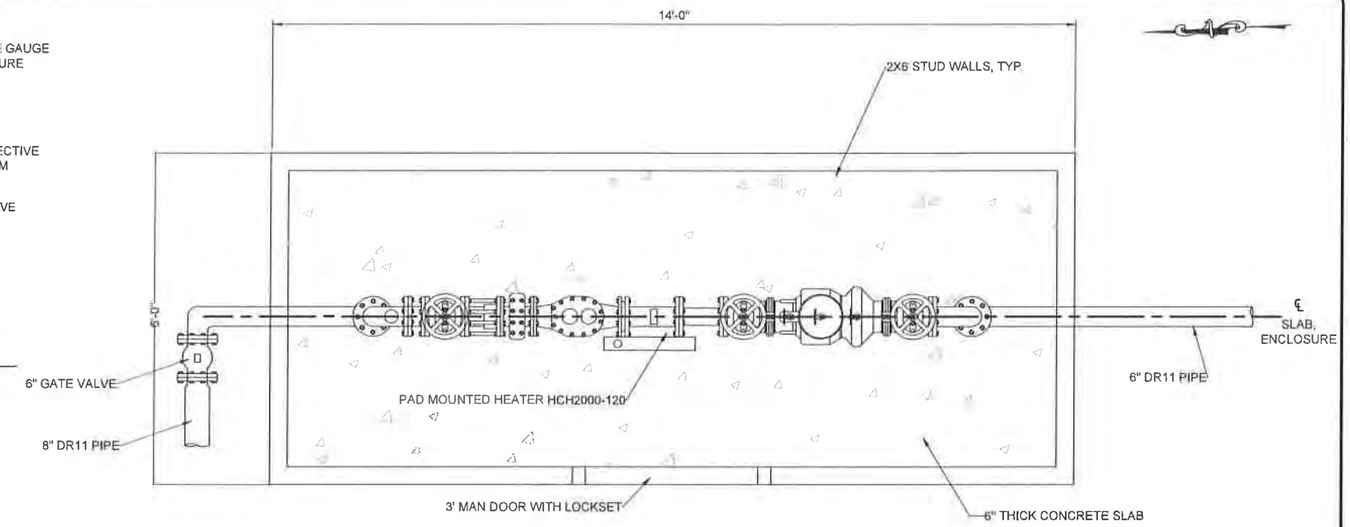

2 C204 **WATER METER ENCLOSURE - PLAN**
SCALE: NTS

DESIGNATION	COMPONENT DESCRIPTION
A	6X4" DI REDUCING 90° ELBOW W/ TAP AND 1" AIR RELEASE VALVE
B	4" NRS GATE VALVE
C	4" DISMANTLING JOINT, SET TO 8" ±
D	4" METER W/ STRAINER
E	4" DI PIPE SPOOL W/ 1" TAPPED CONNECTION, SAMPLING PORT, AND PRESSURE GAGUE (SEE DETAIL)
F	4" SPOOL PIECE
G	4" DOUBLE CHECK VALVE
H	4" DI 90° BEND

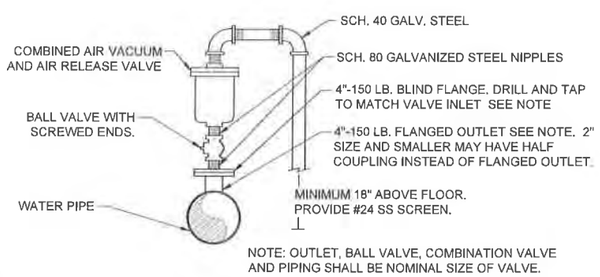

3 C204 **AIR/VACUUM & AIRE RELEASE VALVE ASSEMBLY**
SCALE: NTS

NOTES:
1. ALL JOINTS TO BE FUSED, FLANGED, OR RESTRAINED TO WITHSTAND A MINIMUM PRESSURE OF 200 PSI.

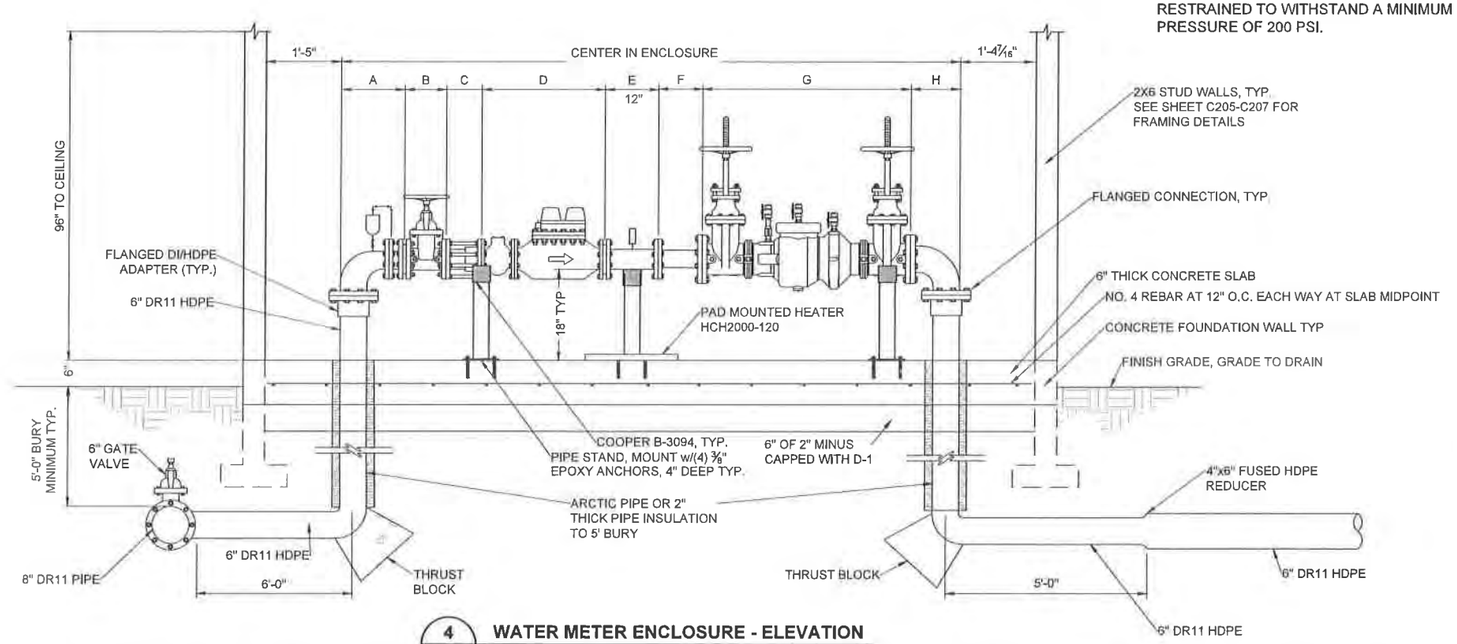

4 C204 **WATER METER ENCLOSURE - ELEVATION**
SCALE: NTS

DESIGN MSM
DRAWN MSM
CHECK JMP
APPROVED JMP
FILE:

No.	DATE	REVISION	BY	APRVD.

DELTA DRIVE SUBDIVISION
JUNEAU, AK

BICKNELL INC. QUALITY CONSTRUCTION

STATE OF ALASKA 49TH Joseph M. Pusich CE 8152 REGISTERED PROFESSIONAL ENGINEER 12/03/20

PDC ENGINEERS
PLAN • DESIGN • CONSTRUCT
A BESPEC COMPANY
9109 Mendenhall Mall Rd. Ste. 4, Juneau, AK 99801
907.780.6060 | AECC605

WATER METER ENCLOSURE DETAILS

DATE: Dec 03, 2020
PDC No. 2009BJN
SHEET C204

P:\2020\2009BJN-Bicknell_Delta\C-C2501and\2009BJN.dwg PLOT: December 03, 2020 at: 3:59pm Mikki Minich

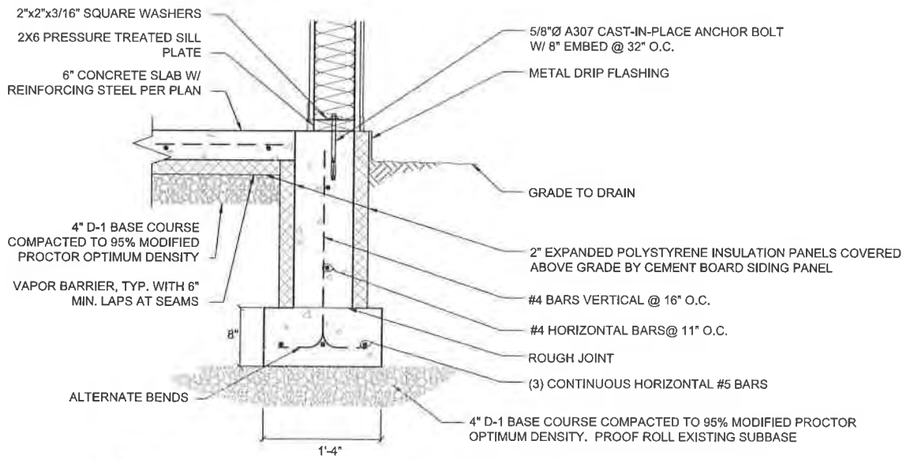

1 C205 **FOUNDATION AND STEM WALL DETAIL**
SCALE: NTS

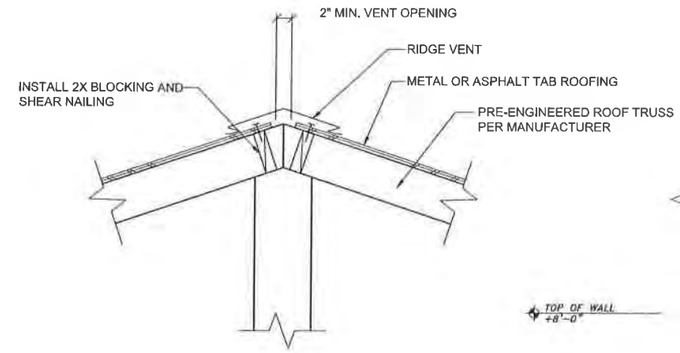

2 C205 **ROOF RIDGE VENT DETAIL**
SCALE: NTS

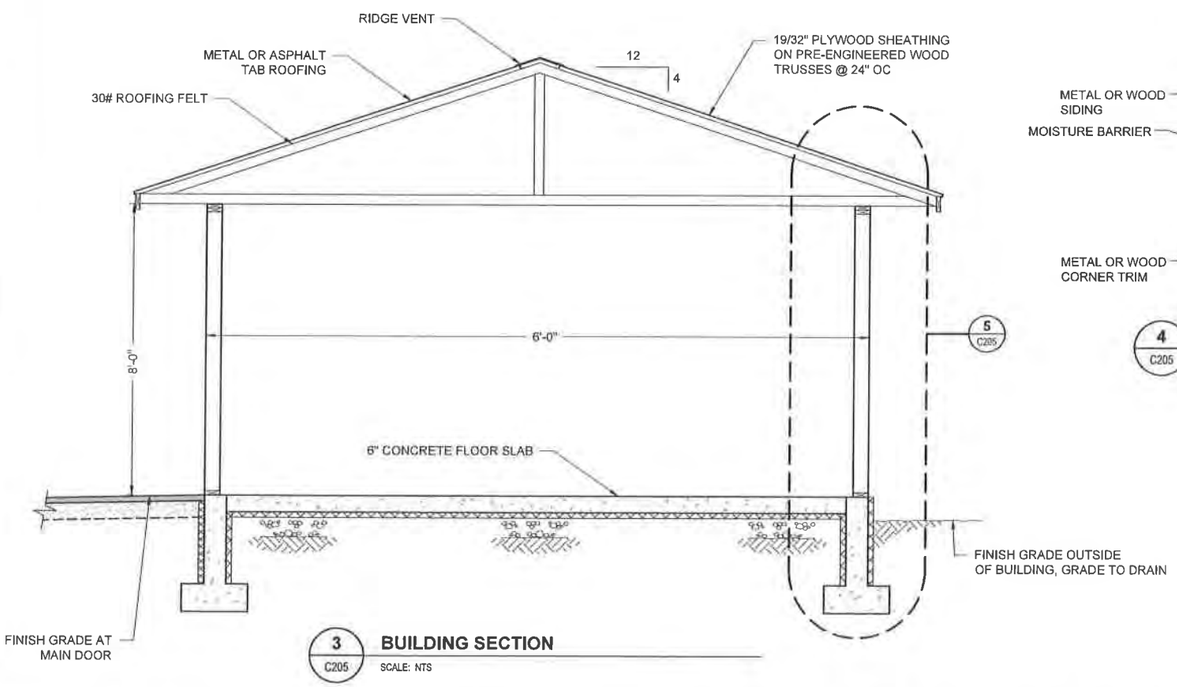

3 C205 **BUILDING SECTION**
SCALE: NTS

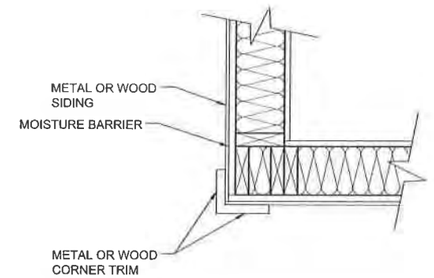

4 C205 **OUTSIDE CORNER DETAIL**
SCALE: NTS

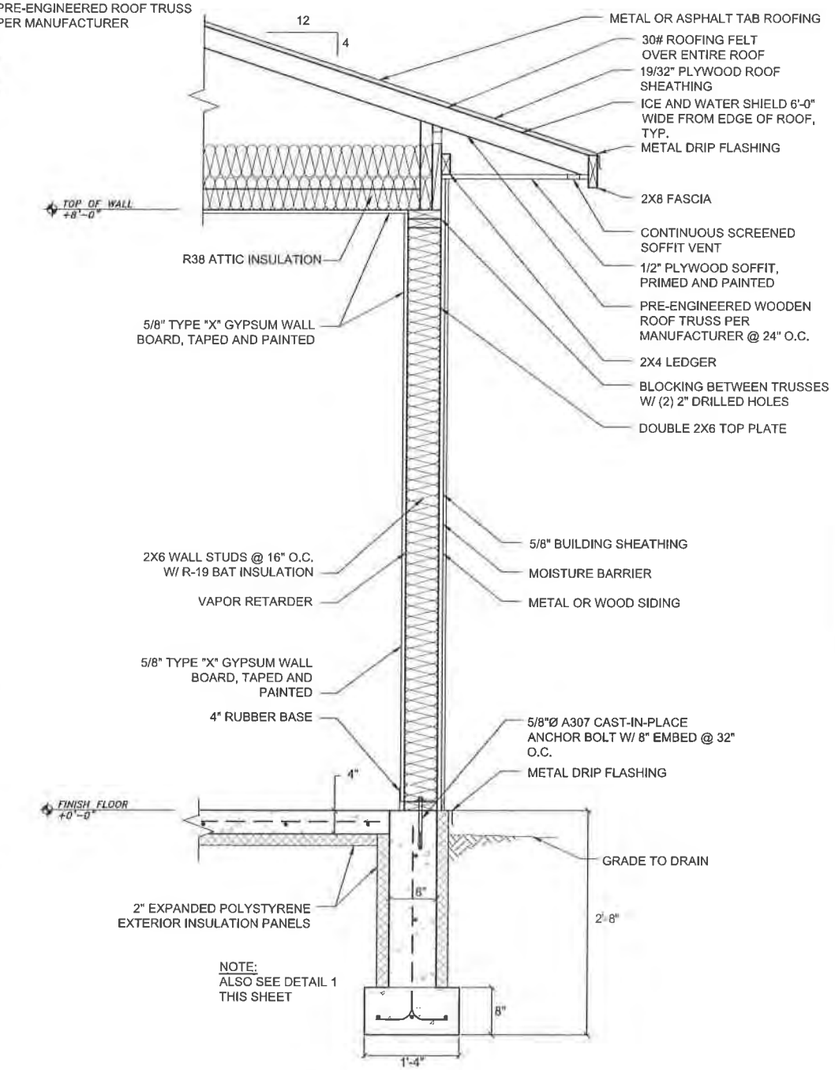

5 C205 **WALL SECTION**
SCALE: NTS

DESIGN	MSM
DRAWN	MSM
CHECK	JMP
APPROVED	JMP
FILE	

No.	DATE	REVISION	BY	APRVD.

DELTA DRIVE SUBDIVISION

JUNEAU, AK

BICKNELL INC. QUALITY CONSTRUCTION

STATE OF ALASKA 49TH Joseph M. Pusich CE 8152 REGISTERED PROFESSIONAL ENGINEER 12/03/20

PDC ENGINEERS
PLAN • DESIGN • CONSTRUCT
A BESPEC COMPANY
9109 Mendenhall Mall Rd. Ste. 4, Juneau, AK 99801
907.780.6060 | AECC605

WATER METER ENCLOSURE DETAILS

DATE: Dec 03, 2020
PDC No. 20098.JN

SHEET
C205

P:\2020\20098JN-Bicknell_Delta\C\C205\set\20098JN.dwg PLOT: December 03, 2020 at: 3:59pm Micki Minisch

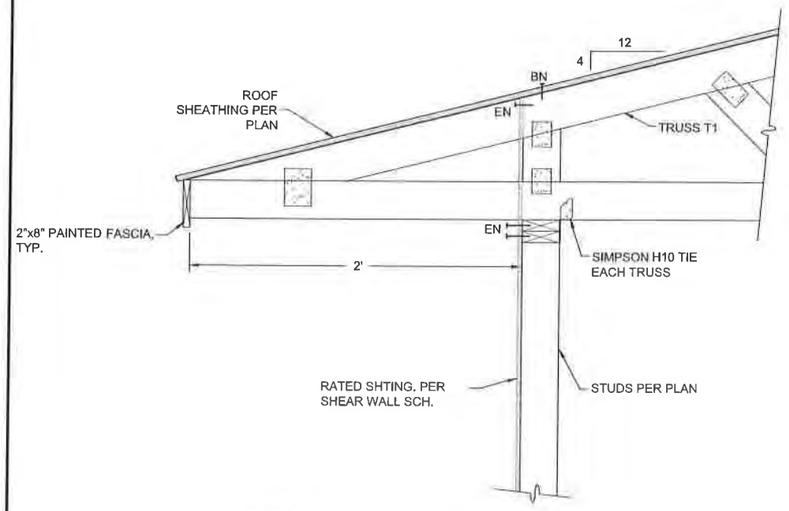

1 C206 **ROOF TRUSS TO WALL CONNECTION**
SCALE: NTS

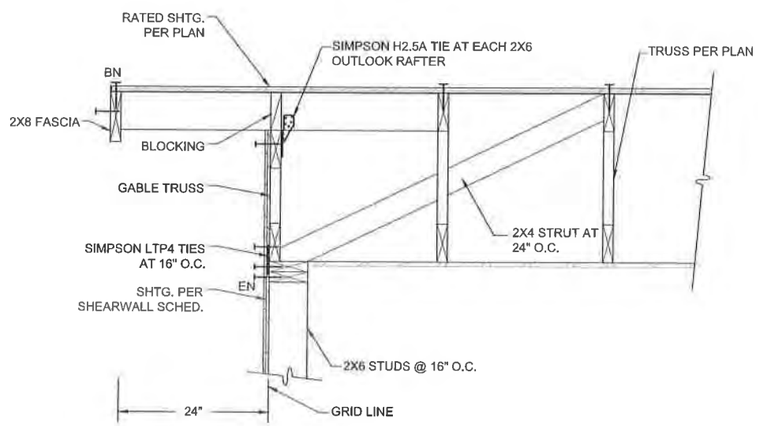

2 C206 **GABLE END DETAIL**
SCALE: NTS

NOTES:
1. WHERE NO STUD TO STUD NAILING IS INDICATED, NAIL STUDS TOGETHER w/ 16d @ 12"o.c., TYP.
2. REF. PLANS FOR STUD SIZE & SPACING

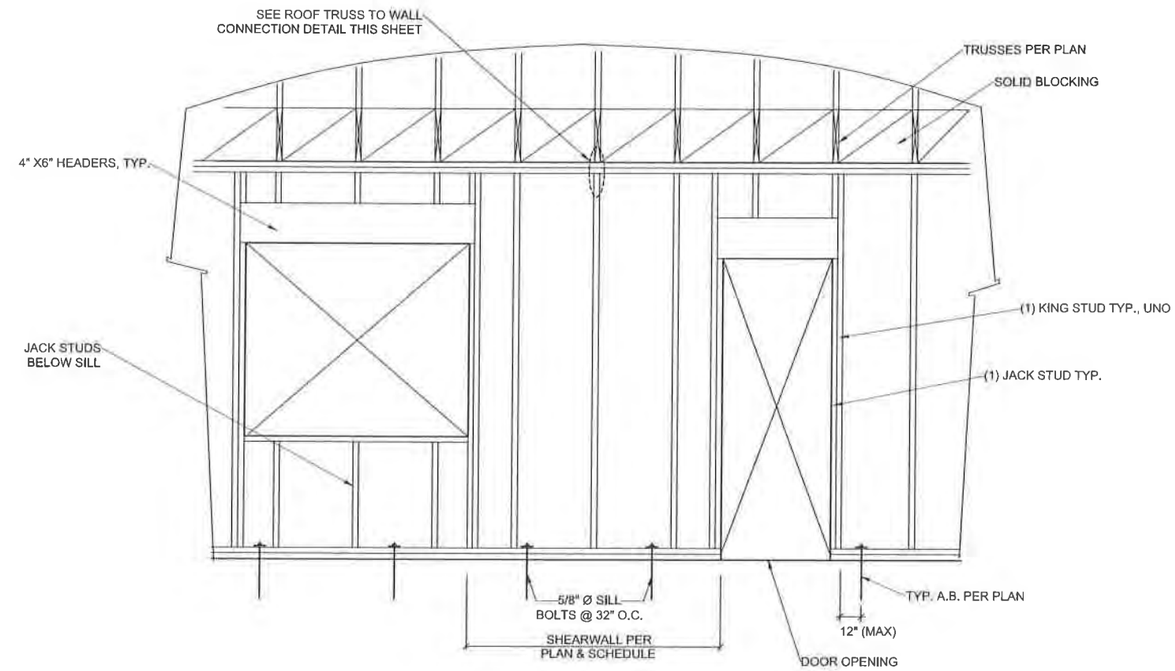

3 C206 **TYPICAL STUD FRAMING**
SCALE: NTS

FRAMING NAILING SCHEDULE

CONNECTION	NAILING	CONNECTION	NAILING
TOP PLATE TO STUD, END NAIL	2x4 (2)- 16d 2x6 (3)- 16d 1 3/4"x5 1/2" LVL (3)-16d 1 3/4"x7 1/4" LVL (4)-16d 1 3/4"x9 1/4" LVL (5)-16d 1 3/4"x11 1/4" LVL (6)-16d	TOP PLATE LAPS (4'-0" MINIMUM)	16d AT 6" O.C.
STUD TO SILL PLATE, END NAIL	2x4 (2)- 16d 2x6 (3)- 16d 1 3/4"x5 1/2" LVL (3)-16d 1 3/4"x7 1/4" LVL (4)-16d 1 3/4"x9 1/4" LVL (5)-16d 1 3/4"x11 1/4" LVL (6)-16d	BUILT-UP HEADERS AND BEAMS	16d AT 16" O.C. ALONG TOP AND BOTTOM EDGE
DOUBLE SILL PLATES, FACE NAIL (STAGGER)	10d AT 12" O.C.	BUILT-UP COLUMNS BELOW BEAMS, FACE NAIL	16d AT 16" O.C. - EACH FACE
DOUBLE STUDS, FACE NAIL (STAGGER)	10d AT 12" O.C. - EACH FACE	BUILT-UP CORNER STUDS (3 STUDS MINIMUM)	16d AT 24" O.C.
DOUBLE TOP PLATES, FACE NAIL	16d AT 24" O.C.	BACKING AND BLOCKING AT TRUSSES AND 2x FRAMING, END NAIL OR TOE NAIL	(2)- 16d EACH END
TOP PLATES AT WALL INTERSECTIONS, FACE NAIL	(2)- 16d	BACKING AND BLOCKING AT I-JOIST FRAMING	SIMPSON Z2 OR EQUAL AT EACH END [W/(4)-10dx1 1/2" NAILS]

DESIGN MSM
DRAWN MSM
CHECK JMP
APPROVED JMP
FILE:

No.	DATE	REVISION	BY	APRVD.

DELTA DRIVE SUBDIVISION
JUNEAU, AK

BICKNELL INC. QUALITY CONSTRUCTION

STATE OF ALASKA 49TH Joseph M. Pursich CE 8152 REGISTERED PROFESSIONAL ENGINEER 12/03/20

PDC ENGINEERS
PLAN • DESIGN • CONSTRUCT
A NESPEC COMPANY
9109 Mendenhall Mall Rd. Ste 4, Juneau, AK 99801
907.780.6060 | AECC605

WATER METER ENCLOSURE DETAILS

DATE: Dec 03, 2020
PDC No. 20098JN
SHEET C206

P:\2020\20098JN-Bicknell_Delta\C\20091new\20098JN.dwg PLOT: December 03, 2020 at 3:59pm Mitch Misisch

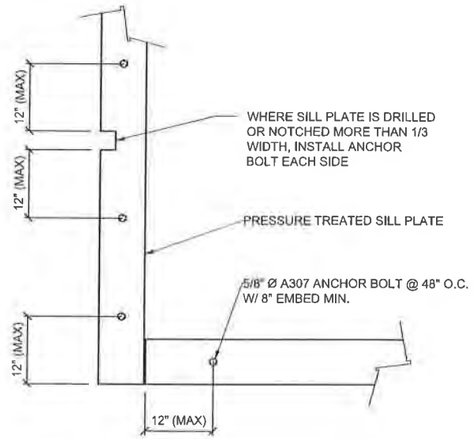

PLAN VIEW

1 / C207 SILL PLATE BOLTING TO CONCRETE
SCALE: NTS

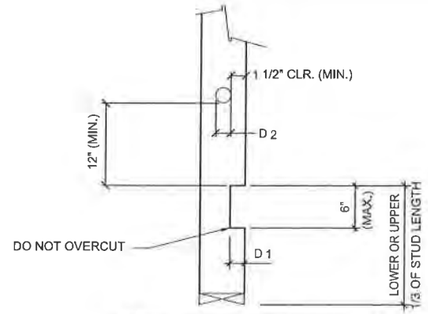

BEARING WALLS		
STUD SIZE	MAX. D 1 (NOTCH)	MAX. D 2 (HOLE)
2x6	1 1/4"	1 1/2"

2 / C207 ALLOWABLE HOLES AND NOTCHES IN STUDS
SCALE: NTS

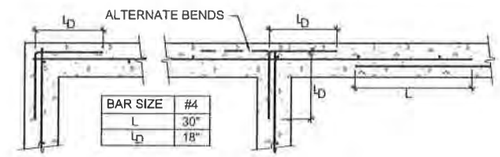

BAR SIZE	#4
L	30"
LD	18"

SINGLE CURTAIN @ STEM WALLS

3 / C207 WALL & FOOTING REINFORCING AT CORNERS & INTERSECTIONS
SCALE: NTS

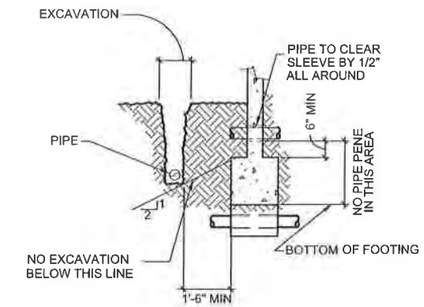

FOOTING SECTION

4 / C207 PIPES & TRENCHES AT FOUNDATIONS
SCALE: NTS

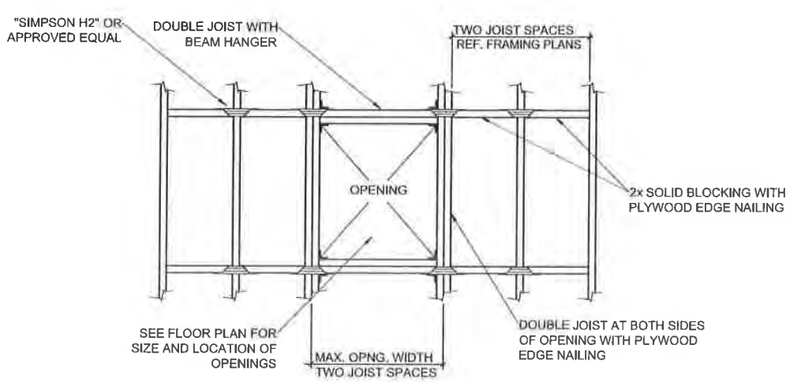

5 / C207 TYP. OPENINGS IN FLOORS AND ROOF
SCALE: NTS

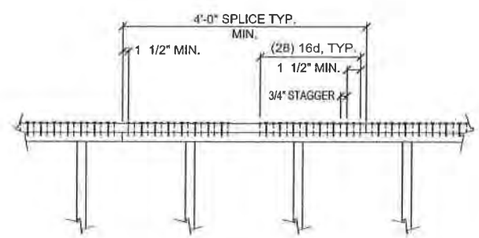

NAILED SPLICE

NOTES:

1. MINIMUM PLATE SPLICE IS (28) 16d EA. SIDE OF EA. PLATE JOINT. MSTC78 IS ALTERNATE.
2. STAGGER NAILS IN 2 ROWS.
3. OCCURS AT TOP PLATES UNDER ROOF.

6 / C207 TYPICAL PLATE SPICE
SCALE: NTS

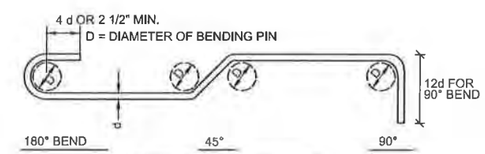

BAR SIZE	MIN. PIN DIA.
#3 THRU #8	6 BAR DIA.

LEGEND (FOR REINF. BENDS NOT SHOWN TO SCALE)

- DENOTES 90° BEND IN THE PLANE OF THE DWG.
- DENOTES 90° BEND PERPENDICULAR TO THE PLANE OF THE DWG.
- DENOTES BEND PERPENDICULAR TO THE PLANE OF THE DWG.
- DENOTES BEND IN THE PLANE OF THE DWG.
- DENOTES OFFSET IN THE PLANE OF THE DWG.

7 / C207 STANDARD HOOKS AND BENDS
SCALE: NTS

P:\2020\20098JN-Bicknell_Delta\C\C207\C207\20098JN.dwg, PLOT: December 03, 2020 at 3:39pm, Mike Msmith

DESIGN	MSM
DRAWN	MSM
CHECK	JMP
APPROVED	JMP
FILE:	

No.	DATE	REVISION	BY	APRVD.

DELTA DRIVE SUBDIVISION

JUNEAU, AK

BICKNELL INC. QUALITY CONSTRUCTION

STATE OF ALASKA 49TH Joseph M. Punich CE 8152 REGISTERED PROFESSIONAL ENGINEER 12/03/20

PDC ENGINEERS
PLAN • DESIGN • CONSTRUCT
A BESPEC COMPANY
9109 Mendenhall Mall Rd. Ste. 4, Juneau, AK 99801
907.780.6060 | AECC605

WATER METER ENCLOSURE DETAILS

DATE: Dec 03, 2020
PDC No. 20098JN

SHEET C207

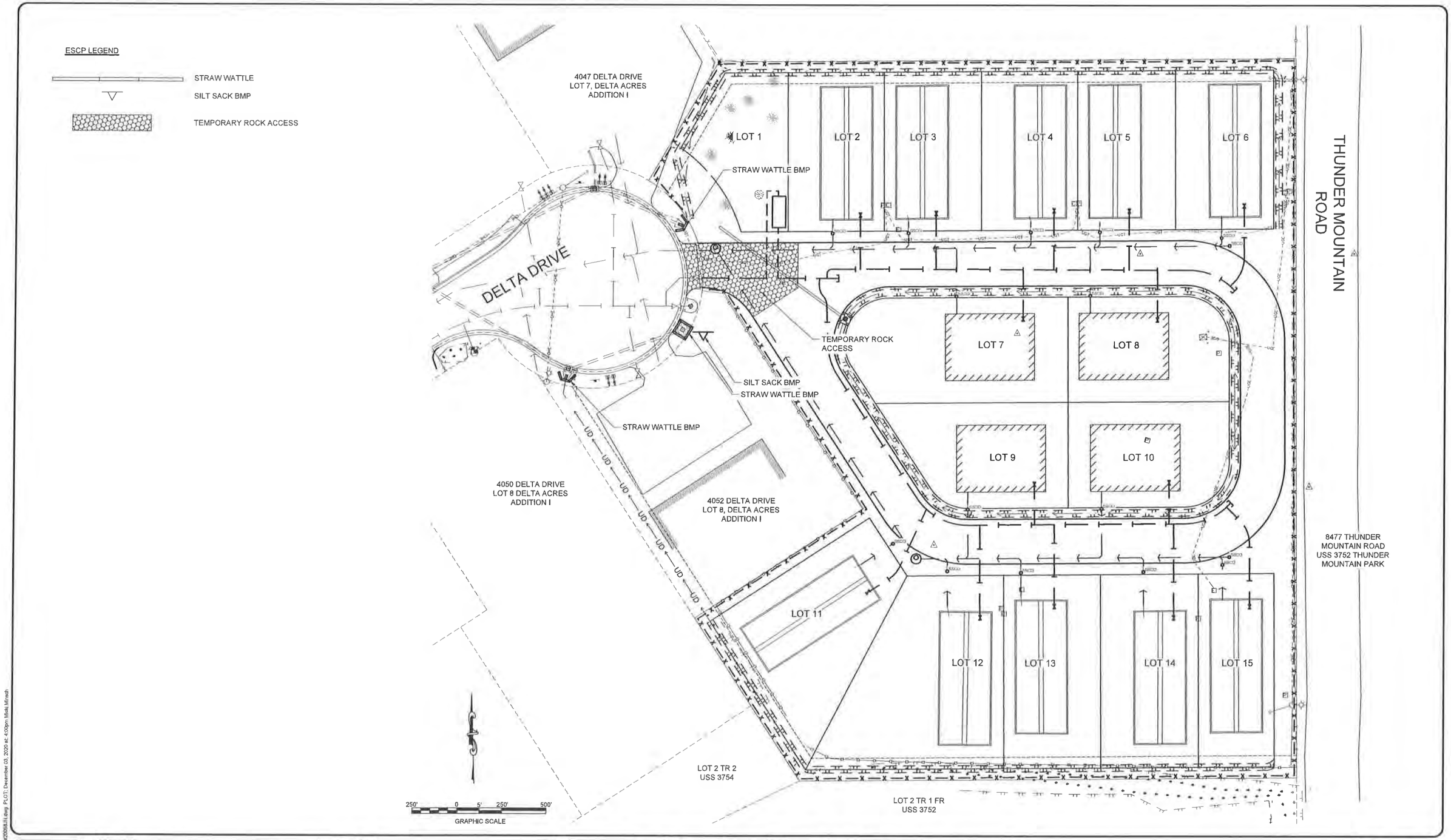

DESIGN	MSM
DRAWN	MSM
CHECK	JMP
APPROVED	JMP
FILE:	

No.	DATE	REVISION	BY	APRVD.

DELTA DRIVE SUBDIVISION

JUNEAU, AK

BICKNELL INC. QUALITY CONSTRUCTION

STATE OF ALASKA 49TH Joseph M. Pusich CE 8152 REGISTERED PROFESSIONAL ENGINEER 12/03/20

PDC ENGINEERS
PLAN • DESIGN • CONSTRUCT
A AESPEC COMPANY
9109 Mendenhall Mall Rd. Ste. 4, Juneau, AK 99801
907.780.6060 | AECC605

EROSION & SEDIMENT CONTROL PLAN

DATE: Dec 03, 2020
PDC No. 20098JN

SHEET C300

F:\2020\20098JN-Bicknell_Delta\C\C600\mw\20098JN.dwg PLOT: December 03, 2020 at: 4:03pm Mieka Minich

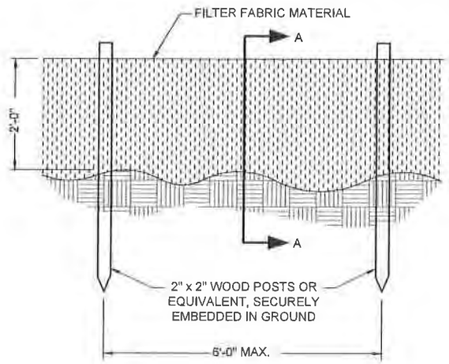

ELEVATION VIEW

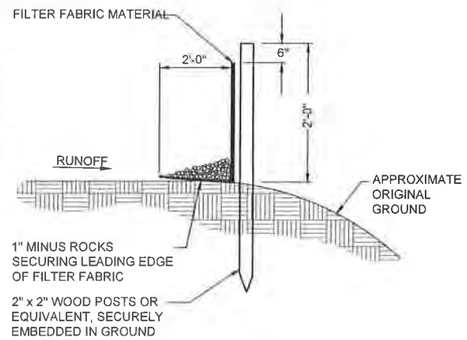

SECTION "A-A"

1 C301 SILT FENCE DETAIL

SCALE: NTS

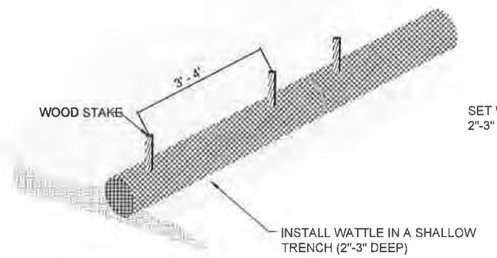

TYPICAL WATTLE ELEVATION VIEW

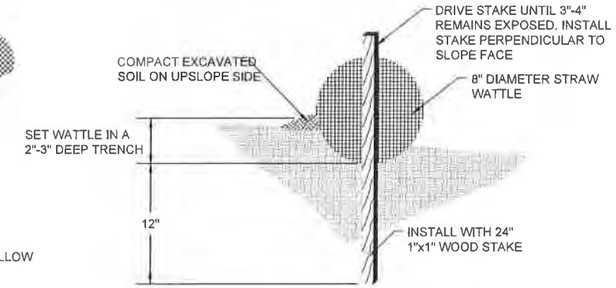

WATTLE ENTRENCHMENT

WATTLE NOTES:

1. BEGIN AT THE LOCATION WHERE THE WATTLE IS TO BE INSTALLED BY EXCAVATING A 2"-3" DEEP x 9" WIDE TRENCH ALONG THE CONTOUR OF THE SLOPE. EXCAVATED SOIL SHOULD BE PLACED UP-SLOPE FROM THE ANCHOR TRENCH.
2. PLACE THE WATTLE IN THE TRENCH SO THAT IT CONTOURS TO THE SOIL SURFACE COMPACT SOIL FROM THE EXCAVATED TRENCH AGAINST THE WATTLE ON THE UPHILL SIDE. ADJACENT WATTLES SHOULD TIGHTLY ABUT EACH OTHER.
3. SECURE THE WATTLE WITH 24" STAKES EVERY 3-4' AND WITH A STAKE ON EACH END. STAKES SHOULD BE DRIVEN THROUGH THE MIDDLE OF THE WATTLE LEAVING AT LEAST 3-4" OF STAKE EXTENDING ABOVE THE WATTLE STAKES SHOULD BE DRIVEN PERPENDICULAR TO SLOPE FACE.

2 C301 STRAW WATTLE IN GROUND DETAIL

SCALE: NTS

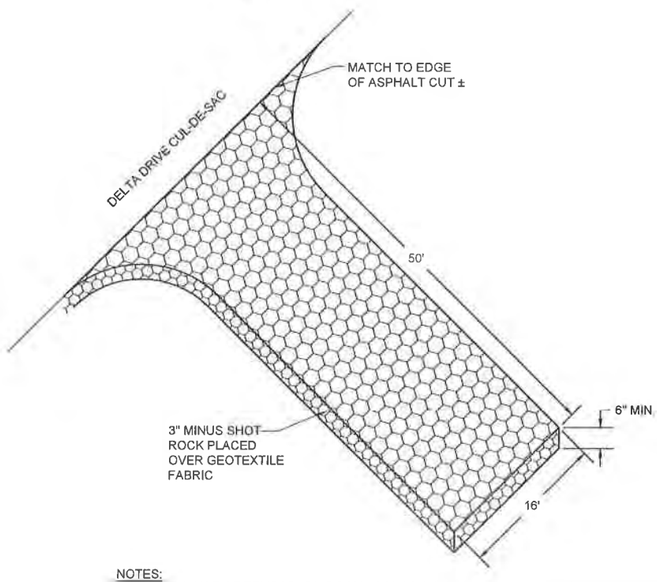

NOTES:

1. MAINTENANCE OF TEMPORARY ROCK ACCESS SHALL INCLUDE REPLACING ROCK AS REQUIRED TO MAINTAIN AN EFFECTIVE AREA FOR SHEDDING EARTHEN MATERIAL FROM CONSTRUCTION EQUIPMENT AND PREVENTING MATERIAL FROM GETTING TRACKED ON TO DELTA DRIVE.
2. CLEAN AND REMOVE ALL TRACKED MATERIAL (MUD, SILT, DEBRIS, ETC.) OFF OF THE PROJECT SITE DAILY AND DISPOSE OF MATERIAL AT AN APPROVED DISPOSAL LOCATION.
3. TEMPORARY ROCK ACCESS APPROACHES SHALL BE INSTALLED AS SHOWN ON THE EROSION AND SEDIMENT CONTROL PLAN OR AS DIRECTED BY THE ENGINEER.

3 C301 TEMPORARY ROCK ACCESS

SCALE: NTS

EROSION AND SEDIMENT CONTROL NOTES:

1. EROSION AND SEDIMENT CONTROL PLANS (E.S.C.P) SHOWN ARE INTENDED AS A MINIMUM LEVEL OF EROSION CONTROL ONLY. THE E.S.C P IS TO BE USED BY THE CONTRACTOR TO DEVELOP A SITE SPECIFIC STORM WATER POLLUTION PREVENTION PLAN (SWPPP). ALL SEDIMENTATION FROM ON SITE DRAINAGE AND GRADING SHALL BE CONTAINED ON SITE. THE CONTRACTOR IS SOLELY RESPONSIBLE FOR DAMAGE TO ADJACENT PROPERTIES AND STREAMS FROM CONSTRUCTION RELATED EROSION AND SILTATION DURING THE COURSE OF WORK. ANY DAMAGE RESULTING FROM SUCH EROSION AND SILTATION SHALL BE CORRECTED AT THE EXPENSE OF THE CONTRACTOR.
2. ALL EROSION CONTROL/SEDIMENTATION CONTROL BARRIERS SHALL BE IN PLACE PRIOR TO COMMENCING EXCAVATION OR FILLING OPERATIONS.
3. TEMPORARY EROSION CONTROL SYSTEM WILL NOT BE REMOVED UNTIL GERMINATION OF SEEDING AND NO EROSION/SEDIMENT PROBLEMS EXIST.
4. COLLECTED SEDIMENT WILL BE DISPOSED OF OFF SITE AT AN EXISTING APPROVED DUMPSITE. COLLECTED SEDIMENT MAY NOT BE USED AS EMBANKMENT.
5. DEWATERING OF WORK AREAS BY PUMPING SHALL BE IMPLEMENTED TO REDUCE THE PROJECTS WATER QUALITY IMPACTS. THE PUMP DISCHARGE NEEDS TO BE FILTERED THROUGH SEDIMENT CONTROL DEVICES SUCH AS "DIRTBAG" OR SEDIMENT CONTROL STRUCTURES BEFORE IT CAN ENTER FISH HABITATS AT ANY POINT.
6. CONTRACTOR SHALL KEEP CLEAN AND DISPOSE OF ALL EARTHEN MATERIAL TRACKED ONTO DELTA DRIVE. THIS SHALL INCLUDE SWEEPING WITH POWER BROOM, VACUUMING AND WATERING ON A DAILY BASIS DURING HAULING ACTIVITY OR MORE FREQUENTLY AS DIRECTED BY THE ENGINEER.

DESIGN MSM
DRAWN MSM
CHECK JMP
APPROVED JMP
FILE:

No.	DATE	REVISION	BY	APRVD.

DELTA DRIVE SUBDIVISION

JUNEAU, AK

BICKNELL INC. QUALITY CONSTRUCTION

STATE OF ALASKA 49TH Joseph M. Pusich CE 8152 REGISTERED PROFESSIONAL ENGINEER 12/03/20

PDC ENGINEERS
PLAN • DESIGN • CONSTRUCT
A NESPEC COMPANY
9109 Mendenhall Mall Rd. Ste. 4, Juneau, AK 99801
907.780.6060 | AECC605

EROSION & SEDIMENT CONTROL DETAILS

DATE: Dec 03, 2020
PDC No. 20098JN

SHEET C301

P:\2020\20098JN-Bicknell_Delta\CV\C8001.dwg\20098JN.dwg PLOT: December 03, 2020 at: 4:05pm Msel,Mfinch

GENERAL NOTES

1. ALL BEARINGS SHOWN ARE TRUE BEARINGS AS ORIENTED TO THE BASIS OF BEARING AND DISTANCES SHOWN ARE REDUCED TO HORIZONTAL FIELD DISTANCES.
2. THE ERROR OF CLOSURE OF THIS SURVEY DOES NOT EXCEED 1:10,000.
3. BASIS OF BEARING
   THE BASIS OF BEARING FOR THIS PLAT IS THE BEARING OF S 0° 01' 00" W, AS SHOWN ON PLAT No. 73-17, DATED OCTOBER 29, 1973, BETWEEN THE RECOVERED MONUMENTS, AS SHOWN ON THIS PLAT.
4. WHERE RECORD SURVEY COURSES (BEARINGS AND/OR DISTANCES) DIFFER FROM THAT OF ACTUAL FIELD MEASURED AND/OR COMPUTED SURVEY COURSES, THE RECORD BEARING AND/OR DISTANCES IS SHOWN WITHIN PARENTHESIS AND REFERENCED TO A RECORDED PLAT (R#).
5. THE PRELIMINARY FIELD SURVEYING WAS PERFORMED ON MAY 26-27, 2020, UTILIZING A TRIMBLE S7 ROBOTICS TOTAL STATION WITH STANDARD LASER RANGING MEASUREMENTS.
6. RECORD INFORMATION
   THE RECORD INFORMATION USED FOR THIS SUBDIVISION IS DERIVED FROM THE OFFICIAL PLATS: PLAT No. 73-17, JUNEAU RECORDING DISTRICT, DATED OCTOBER 29, 1973 (R1), PLAT No. 92-18, JUNEAU RECORDING DISTRICT, DATED APRIL 28,1992 (R2);
7. ALL DISTANCES ARE MEASURED IN U.S. SURVEY FEET, AND HAVE BEEN REDUCED TO THEIR HORIZONTAL EQUIVALENTS.
8. DOMESTIC WATER AND SANITARY SEWER DISPOSAL PROVIDED BY THE CITY AND BOROUGH OF JUNEAU PUBLIC UTILITIES.
9. THIS PLAT CREATES AN ALTERNATE RESIDENTIAL SUBDIVISION PURSUANT TO AND GOVERNED BY THE CITY AND BOROUGH OF JUNEAU LAND USE CODE TITLE 49 ARTICLE IX. EACH OWNER OF A UNIT-LOT IS REQUIRED TO, AND SHALL BE, THROUGHOUT THEIR OWNERSHIP, A MEMBER OF THE THUNDER MOUNTAIN VIEWS HOA, INC., REQUIRED TO PAY ASSESSMENTS ASSESSED BY THUNDER MOUNTAIN VIEWS HOA, INC.
10. PER CBJ 49.15.920(j), NO PARKING AREAS, DWELLING UNITS, UNIT-LOTS, OR PERMISSIBLE USES MAY BE LOCATED WITHIN THE PERIMETER BUFFER. ACCESS TO THE DEVELOPMENT MAY CROSS A PORTION OF THE BUFFER.
11. ACCESS TO LOTS SHALL BE VIA ACCESS EASEMENTS SHOWN ON THIS PLAT AND IS SUBJECT TO THE REQUIREMENTS IN THE BYLAWS OF THUNDER MOUNTAIN VIEWS HOA, INC.
12. LOT 15, BLANKET EASEMENT, PERIMETER BUFFER, AND DRAINAGE EASEMENTS SHOWN ON THIS PLAT ARE PRIVATE EASEMENTS, AND THE LAND ON WHICH THE PRIVATE EASEMENTS ARE LOCATED IS OWNED AND MANAGE BY THUNDER MOUNTAIN VIEWS HOA, INC.

OWNERSHIP CERTIFICATE

BICKNELL, INC. HEREBY CERTIFIES THAT BICKNELL, INC. IS THE OWNER OF THE PROPERTY SHOWN AND DESCRIBED HEREON AND THAT IT HEREBY ADOPTS THIS PLAT OF SUBDIVISION WITH ITS FREE CONSENT, AND DEDICATE ALL STREETS, ALLEYS, WALKS, PARKS AND OTHER OPEN SPACES TO PUBLIC OR PRIVATE USE AS NOTED:

OWNER _____ DATE: _____ 2021
ROSCOE V. BICKNELL, IV
BICKNELL, INC.

Packet Page 275 of 761

NOTARY ACKNOWLEDGMENT

UNITED STATES OF AMERICA)
) SS
STATE OF ALASKA)

THIS IS TO CERTIFY THAT ON THIS_____ DAY OF_____, 2021, BEFORE ME, THE UNDERSIGNED A NOTARY PUBLIC IN AND FOR THE STATE OF ALASKA, DULY COMMISSIONED AND SWORN, PERSONALLY APPEARED _____ TO ME KNOWN TO BE THE PERSONS DESCRIBED IN AND WHO EXECUTED THE ABOVE AND FOREGOING INSTRUMENT, AND ACKNOWLEDGED TO ME THAT THEY SIGNED AND SEALED THE SAME FREELY AND VOLUNTARILY FOR THE USES AND PURPOSES THEREIN MENTIONED.
WITNESS MY HAND AND OFFICIAL SEAL THE DAY AND YEAR IN THIS CERTIFICATE FIRST ABOVE WRITTEN.

_____
NOTARY PUBLIC FOR ALASKA

MY COMMISSION EXPIRES: _____

PLANNING COMMISSION PLAT APPROVAL

I HEREBY CERTIFY THAT THE SUBDIVISION PLAT SHOWN HEREON HAS BEEN FOUND TO COMPLY WITH THE SUBDIVISION REGULATIONS OF THE CITY AND BOROUGH OF JUNEAU, ALASKA AND THAT SAID PLAT HAS BEEN APPROVED BY THE PLANNING COMMISSION BY PLAT RESOLUTION NO. _____ , DATED _____ , 2021 , AND THAT THE PLAT SHOWN HEREON HAS BEEN APPROVED FOR RECORDING IN THE JUNEAU RECORDING DISTRICT, STATE RECORDERS OFFICE AT ANCHORAGE.

_____
CHAIRMAN OF THE PLANNING COMMISSION
CITY AND BOROUGH OF JUNEAU

DATED _____ , 2021

ATTEST:

_____
MUNICIPAL CLERK
CITY AND BOROUGH OF JUNEAU

TYPICAL SECONDARY MONUMENT

(ESTABLISHED THIS SURVEY)

1" DIA. ORANGE SURVEY CAP ON
5/8" DIA. x 30" REBAR

RECOVERED MONUMENTS

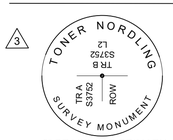

3" BRASS CAP PRIMARY
GOOD CONDITION
1.5' BELOW GRADE

3" BRASS CAP PRIMARY
GOOD CONDITION
FLUSH WITH GRADE

EASEMENT NOTE

A BLANKET EASEMENT ON LOT 15 FOR UTILITIES, DRAINAGE, AND EGRESS AND INGRESS ACCESS TO ALL UNIT-LOTS IS DEDICATED BY THIS PLAT AS A PRIVATE EASEMENT FOR THE BENEFIT OF THE MEMBERS OF THUNDER MOUNTAIN VIEWS HOA, INC., AND SHALL BE MANAGED BY THE THUNDER MOUNTAIN VIEWS HOA, INC.

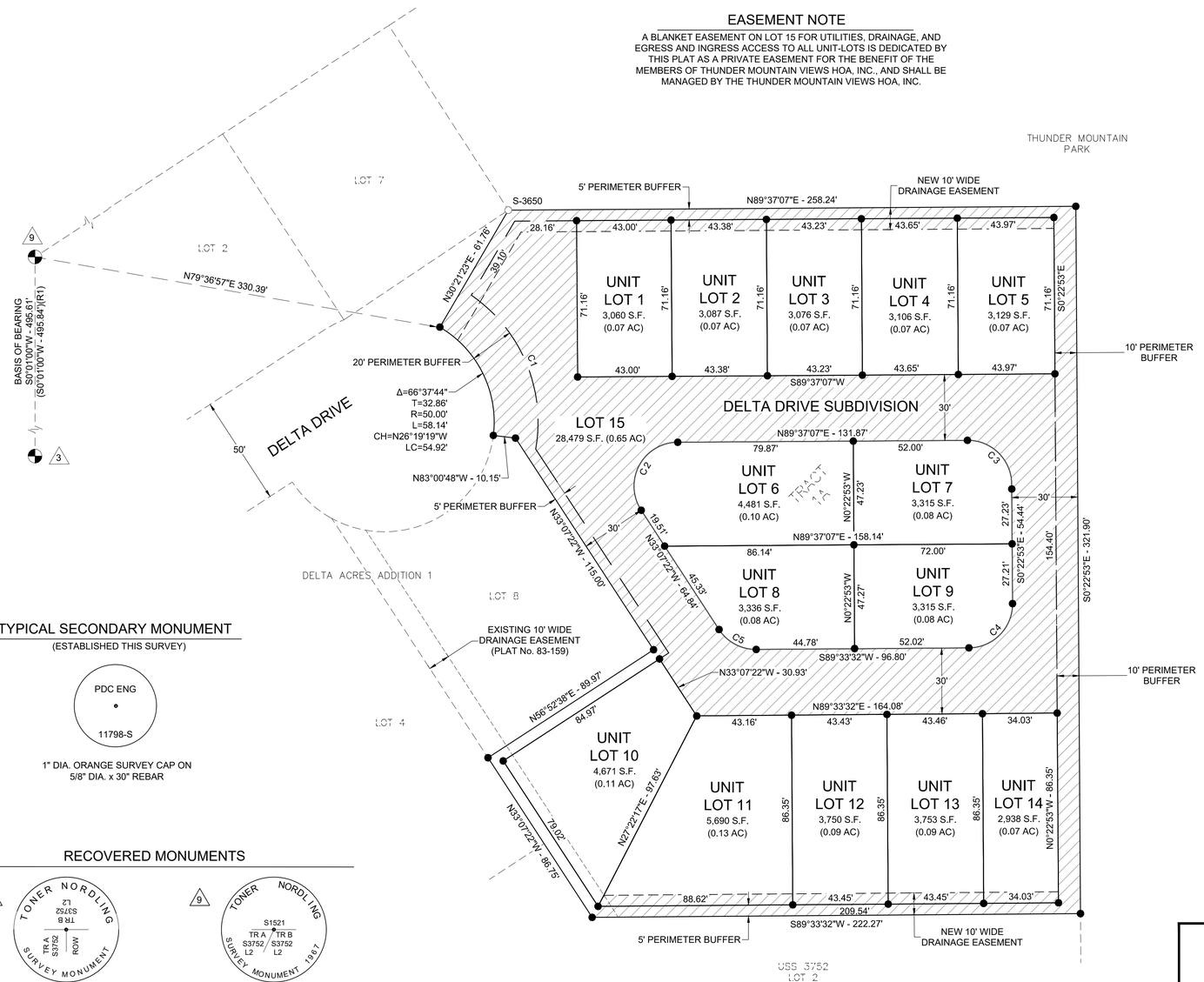

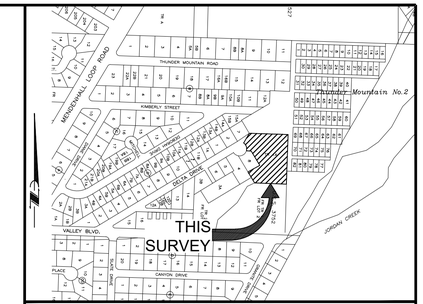

VICINITY MAP

SOURCE: CBJ PROPERTY ATLAS

SCALE: 1"= 500'

LEGEND

- PRIMARY MONUMENT (RECOVERED)
- SECONDARY MONUMENT (RECOVERED)
- SECONDARY MONUMENT (ESTABLISHED)
- SURVEYED LINE
- UNSURVEYED LINE
- EASEMENT LINE
- NEW EASEMENT LINE
- (R1) PLAT No. 73-17, JRD
- (R2) PLAT No. 92-18, JRD
- ACCESS, UTILITY & DRAINAGE EASEMENT
- PERIMETER BUFFER

SURVEYOR'S CERTIFICATE

I, CRAIG O. RANSON, IN MY CAPACITY AS A PROFESSIONAL LAND SURVEYOR REGISTERED IN THE STATE OF ALASKA, CERTIFY THAT THIS PLAT REPRESENTS THE SURVEY MADE BY ME OR UNDER MY DIRECT SUPERVISION, THAT THE ACCURACY OF THE SURVEY IS WITHIN THE LIMITS REQUIRED BY TITLE 49 OF THE CODE OF THE CITY AND BOROUGH OF JUNEAU, THAT ALL DIMENSIONS AND RELATIVE BEARINGS ARE CORRECT AND THAT MONUMENTS ARE SET IN PLACE AND NOTED UPON THIS PLAT AS PRESENTED.

DATE: 04/12/21

STATE OF ALASKA
49TH
CRAIG O. RANSON
LS 11798
REGISTERED PROFESSIONAL LAND SURVEYOR

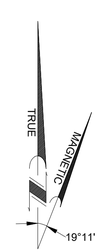

SOURCE: N.O.A.A.
MAGNETIC DECLINATION 19°11'E
NOVEMBER 14, 2017 CHANGING BY
0°17' W/YEAR

CURVE TABLE					
CURVE #	LENGTH	DELTA	RADIUS	CHORD BEARING	CORD DISTANCE
C1	80.21'	65° 38' 55"	70.00'	N22° 43' 05"W	75.89'
C2	42.84'	122° 44' 29"	20.00'	S28° 14' 53"W	35.11'
C3	31.42'	90° 00' 00"	20.00'	N45° 22' 53"W	28.28'
C4	31.40'	89° 56' 25"	20.00'	N44° 35' 20"E	28.27'
C5	20.01'	57° 19' 06"	20.00'	S61° 46' 55"E	19.18'

30' 0 15' 30' 60'
SCALE: 1"=30'

SMP20200004/ARP20200001

PDC ENGINEERS
PLAN • DESIGN • CONSTRUCT
A RESPEC COMPANY
9109 Mendenhall Mall Rd. Ste. 4, Juneau, AK 99801
907.780.6060 | AECC605

A PLAT OF
DELTA DRIVE SUBDIVISION
A SUBDIVISION OF
THUNDER MOUNTAIN PARK TRACT 1A
WITHIN U.S. SURVEY NO. 3752
WITHIN CITY AND BOROUGH OF JUNEAU, ALASKA
JUNEAU RECORDING DISTRICT

STATE RECORDER'S OFFICE AT ANCHORAGE

OWNER:
BICKNELL, INC.
P.O. BOX 33517
JUNEAU, AK 99803

SURVEYOR:
PDC ENGINEERS
9109 MENDENHALL MALL ROAD SUITE 4
JUNEAU, ALASKA 99801
(907) 780-6060

DATE: April 12,2021 SCALE: 1"=30' SHEET 1 OF 1 PDC PROJ. No. 20098JN

P:\2020\20098JN-Bicknell_Delta\LT001\dwg\20098JN - PLAT Apr 12, 2021 - 11:41 AM

Laurel Christian

From: dblommer@bicknellinc.com
Sent: Wednesday, April 14, 2021 12:50 PM
To: Laurel Christian
Subject: FW: HOA Documents

EXTERNAL E-MAIL: BE CAUTIOUS WHEN OPENING FILES OR FOLLOWING LINKS

Does this work from our attorney?

From: dblommer@bicknellinc.com <dblommer@bicknellinc.com>
Sent: Monday, April 12, 2021 9:36 AM
To: 'rbicknelliv@bicknellinc.com' <rbicknelliv@bicknellinc.com>
Subject: FW: HOA Documents

From: Bob Spitzfaden <spitz@gci.net>
Sent: Sunday, April 11, 2021 10:12 AM
To: David Blommer <dblommer@bicknellinc.com>
Subject: HOA Documents

Dear Mr. Blommer:

At the direction of Bicknell, Inc. I prepared the following documents for Thunder Mountain Views HOA, Inc.

1. Articles Of Incorporation.
2. Bylaws.

My Alaska Bar Number showing I am, and have been since 1977, admitted to practice in the State of Alaska : AK Bar No. 7710171

Robert S. Spitzfaden

BYLAWS OF
THUNDER MOUNTAIN VIEWS HOA, INC. CONDOMINIUM ASSOCIATION

I.
PLAN OF ALTERNTIVE RESIDENTIAL SUBDIVISION

Section 1. NAME

The name of the corporation is Thunder Mountain Views HOA, Inc., (hereinafter referred to as the "Association"). The principal office of the corporation shall be located in Juneau, Alaska.

Section 2. BYLAWS APPLICABILITY AND MEMBERSHIP

The provisions of these Bylaws are applicable to the project known as Delta Drive Subdivision, located in the City and Borough of Juneau, created as an alternative residential subdivision pursuant to City and Borough of Juneau Code Chapter 49 Article IX. All owners of unit-lots in said subdivision shall be members of the Association. The membership of each unit-lot owner shall terminate when the owner ceases to be a unit-lot owner and upon the sale, transfer or other disposition of the unit-lot, the owner's membership in the Association shall automatically be transferred to the new unit-lot owner.

Section 3. PERSONAL APPLICATION

All present or future owners, tenants, future tenants, or their employees, or any other person that might use the facilities of the subdivision in any manner, are subject to the regulations set forth in these Bylaws and the plat of Delta Drive Subdivision. The mere acquisition or rental of any of the unit-lots within the subdivision, or the mere act of occupancy of any of the unit-lots, will signify that these Bylaws are accepted, ratified, and will be complied with.

II.
VOTING, MAJORITY OF OWNERS QUORUM, PROXIES

Section 1. VOTING

Voting shall be by unit-lot, with owner(s) of a unit-lot entitled to one vote for each unit-lot owned. In the event the unit-lot is owned by more than one person, those persons must act unanimously to cast the vote allocated to that unit-lot.

Section 2. MAJORITY OF OWNERS

As used in these Bylaws, the term "majority of owners" shall mean those unit-lot owners holding fifty-one percent (51%) of the total number of unit-lots in the subdivision.

Section 3. QUORUM

Except as otherwise provided in these Bylaws, the presence in person or by proxy of a "majority of owners", as defined in Section 2 of this Article, shall constitute a quorum.

Section 4. PROXIES

Votes may be cast in person or by proxy. Proxies must be filed with the Secretary before the appointed time of each meeting.

III.
ADMINISTRATION

Section 1. ASSOCIATION RESPONSIBILITIES

The members shall have the responsibility of electing a Board of Directors in accordance with the provisions of Article IV of these Bylaws, approving an annual budget and such other responsibilities as are contained in the Association's Articles of Incorporation or as are not delegated to the Board of Directors. Except as otherwise provided, decisions and resolutions of the members shall require approval by a majority of owners.

Section 2. PLACE OF MEETINGS

Meetings of the members shall be held in Juneau, Alaska, at a location convenient to the unit-lot owners, as may be designated by the Board of Directors.

Section 3. ANNUAL MEETINGS

The annual meetings of the Association shall be held annually at such date as the Board of Directors determines. At such meetings, there shall be elected by ballot of the unit-lot owners a Board of Directors in accordance with the requirements of Section 5 of Article IV of these Bylaws. The owners may also transact such other business of the Association as may properly come before them.

Section 4 SPECIAL MEETINGS

Special meetings of unit-lot owners shall be called as authorized by AS 10.20.061 as amended. The notice of any special meeting shall state the time and place of such meeting and the purpose thereof. No business shall be transacted at a special meeting, except as stated in the notice, unless by consent of four-fifths of the unit-lot owners present, either in person or by proxy.

Section 5. NOTICE OF MEETINGS

It shall be the duty of the Secretary to mail a notice of each annual or special meeting, stating the purpose thereof, as well as the time and place where it is to be held, to each unit-lot owner of record, at least ten (10), but not more than fifty (50) days prior to such meeting. The mailing of a notice in the manner provided in this Section shall be considered notice served.

Section 6. ADJOURNED MEETINGS

If any meeting of unit-lot owners cannot be organized because a quorum has not attended, the unit-lot owners who are present, either in person or by proxy, may adjourn the meeting to a time not less than forty-eight (48) hours nor more than thirty (30) days from the time the original meeting was called.

IV.
BOARD OF DIRECTORS

Section 1. NUMBER AND QUALIFICATION

The affairs of the Association shall be governed by a Board of Directors composed of three (3) persons, all of whom, except for those appointed and serving as first Directors, must be unit-lot owners of a unit-lot in the subdivision.

Section 2. POWERS AND DUTIES

The Board of Directors shall have the following powers and duties:

(a) To elect the officers of the Association as hereinafter provided.

(b) To administer the affairs of the Association and the Project.

(c) To engage the services of a Manager, who shall manage and carry out the duties required of the Association, including but not limited to the common areas and facilities, upon such terns and for such compensation and with such authority as the Board of Directors may approve.

(d) To formulate policies for the administration, management and operation of the common areas and facilities thereof.

(e) To adopt administrative rules and regulations governing the administration, management, operation and use of the common areas and facilities, and to amend such rules and regulations from time to time.

(f) To provide for the maintenance, repair and replacement of the common areas and facilities and payments therefore, and to approve payment vouchers or to delegate such approval to the officers or the Manager.

(g) To provide for the designation, hiring and removal of employees and other personnel, including accountants, and to engage or contract for the services of others, and to make purchases for the maintenance, repair, replacement, administration, management and operation of the common areas and facilities, and to delegate any such powers to the Manager (and any such employees or other personnel who may be the employees of the Manager).

(h) To estimate the amount of the annual budget and to provide the manner of assessing and collecting from the unit-lot owners their respective shares of such estimated expenses, as hereinafter provided.

(i) Unless otherwise provided herein or in the Articles of Incorporation, to comply with the instructions of a majority of the unit-lot owners, as expressed in a resolution duly adopted at any annual or special meeting of the unit-lot owners.

(j) To appoint committees of members of the Association to overlook and assist in the day-to-day operations, without any executive powers, specifically in respect of items such as maintenance, security, beautification, public relations, and the welfare of residents.

(k) To provide for the repair and maintenance, and management of unit-lot 1, blanket easement, perimeter buffers and drainage easement shown on Plat _____, as well as the water heater hut, mail boxes, and common areas and facilities, as set out in Article XI herein.

(j) To exercise all other powers and duties of the Board of Directors or the Association of unit-lot owners, as required by City and Borough of Juneau Land Use Code Title 49 Article IX.

Section 3. OTHER DUTIES

In addition to duties imposed by these Bylaws, or by resolutions of the Association, the Board of Directors shall be responsible for the following: (a) maintenance, repair, care, upkeep and surveillance of the subdivision and the common areas and facilities; (b) collection of all assessments from the unit-lot owners; and (c) designation and dismissal of the personnel necessary for the maintenance and operation of the Association, the common areas and facilities.

Section 4. MANAGEMENT AGENT

The Board of Directors may employ for the Association a management agent at a compensation established by the Board to perform such duties and services as the Board shall authorize, including, but not limited to, the duties listed in Section 3 of this Article.

Section 5. ELECTION AND TERM OF OFFICE

At the first annual meeting of the Association, new Directors shall be elected for a term of one (1) year. The Directors shall hold office until their successors have been elected and hold their first meeting.

Section 6. BOOKS

The Board of Directors shall cause to be maintained a full set of books and records showing the financial condition of the affairs of the Association in a manner consistent with generally accepted accounting principles.

Section 7. VACANCIES

Vacancies in the Board of Directors caused by any reason, other than the removal of a Director by a vote of the Association, shall be filled by vote of the majority of the remaining Directors, even though they may constitute less than a quorum; and each person so elected shall be a Director until a successor is elected at the next annual meeting of the Association.

Section 8. REMOVAL OF DIRECTOR

At any regular or special meeting duly called, any one or more of the Directors may be removed, with or without cause, by a majority of the unit-lot owners and a successor may then and there be elected to fill the vacancy thus created. Any Director whose removal has been proposed by the unit-lot owners shall be given an opportunity to be heard at the meeting.

Section 9. ORGANIZATION MEETING

The first meeting of a newly elected Board of Directors shall be held within ten (10) days of election at such place as shall be fixed by the Directors at the meeting at which such Directors were elected, and no notice shall be necessary to the newly elected Directors in order legally to constitute such meeting, provided a majority of the whole Board shall be present.

Section 10. REGULAR MEETINGS

Regular meetings of the Board of Directors may be held at such time and place as shall be determined, from time to time, by a majority of the Directors, but at least two such meetings shall be held during each fiscal year. Notice of regular meetings of the Board of Directors shall be given to each Director, personally or by mail, telephone, fax or email, at least three (3) days prior to the day named for such meeting.

Section 11. SPECIAL MEETINGS

Special meetings of the Board of Directors may be called by the President on three (3) days notice to each Director, given personally or by mail, telephone, fax or email, which notice shall state the time, place (as hereinabove provided) and purpose of the meeting. Special meetings of the Board of Directors shall be called by the President or Secretary in like manner and on one days notice at the written request of at least two (2) Directors.

Section 12. WAIVER OF NOTICE

Before or at any meeting of the Board of Directors, any Director may, in writing, waive notice of such meeting and such waiver shall be deemed equivalent to the giving of such notice. Attendance by a Director at any meeting of the Board shall be a waiver of notice by him of the time and place thereof. If all the Directors are present at any meeting of the Board, no notice shall be required and any business may be transacted at such meeting.

Section 13. BOARD OF DIRECTORS' QUORUM

At all meetings of the Board of Directors, a majority of the Directors shall constitute a quorum for the transaction of business, and the acts of the majority of the Directors present at a meeting at which a quorum is present shall be the acts of the Board of Directors. If, at any meeting of the Board of Directors, there is less than a quorum present, the majority of those present may adjourn the meeting from time to time. At any such adjourned meeting, any business which might have been transacted at the meeting as originally called may be transacted without further notice.

Section 14. ACTION WITHOUT MEETING

The Directors shall have the right to take any action in the absence of a meeting which they could take at a meeting by obtaining the written approval of all the Directors. Any action so approved shall have the same effect as though taken at a meeting of the Directors.

Section 15. FIDELITY BONDS

The Board of Directors may require that all officers and employees of the Association handling or responsible for Association funds shall furnish adequate fidelity bonds. The premiums on such bonds shall be paid by the Association.

V.
OFFICERS

Section 1. DESIGNATION

The principal officers of the Association shall be a President, Vice President, a Secretary and a Treasurer, all of which shall be elected by the Board of Directors. The Directors may appoint an Assistant Treasurer, and an Assistant Secretary, and such other officers as in their judgment may be necessary. Any officer may prepare, execute, certify and record amendments on behalf of the Association.

Section 2. ELECTION OF OFFICERS

The officers of the Association shall be elected annually by the Board of Directors at the organization meeting of each new Board and shall hold office at the pleasure of the Board.

Section 3. REMOVAL OF OFFICERS

Upon an affirmative vote of a majority of the members of the Board of Directors, any officer may be removed, either with or without cause, and his successor elected at any regular meeting of the Board of Directors, or at any special meeting of the Board called for such purpose.

Section 4. PRESIDENT

The President shall be the chief executive officer of the Association. He shall preside at all meetings of the Association and of the Board of Directors. He shall have all of the general powers and duties which are usually vested in the office of the President of an Association, including, but not limited to, the power to appoint committees from among the owners from time to time as he may in his discretion decide is appropriate to assist in the conduct of the affairs of the Association.

Section 5. VICE PRESIDENT

The Vice President shall take the place of the President and perform his duties whenever the President shall be absent or unable to act. If neither the President nor the Vice President is able to act, the Board of Directors shall appoint some other member of the Board to do so on an interim basis. The Vice President shall also perform such other duties as shall from time to time be imposed upon him by the Board of Directors.

Section 6. SECRETARY

The Secretary shall keep the minutes of all meetings of the Board of Directors and the minutes of all meetings of the Association; he shall have charge of such books and papers as the Board of Directors may direct; and he shall, in general, perform all the duties incident to the office of Secretary.

Section 7. TREASURER

The Treasurer shall have responsibility for Association funds and securities and shall be responsible for keeping full and accurate accounts of all receipts and disbursements in books belonging to the Association. He shall be responsible for the deposit of all monies and other valuable effects in the name, and to the credit, of the Association in such depositories as may from time to time be designated by the Board of Directors.

VI.
OBLIGATIONS OF THE OWNERS

Section 1. ASSESSMENTS

(a) All owners are obligated to pay all periodic or other assessments imposed by the Association to meet all expenses for the operation, maintenance and repair of (i) common areas and facilities and (ii) the Association, which may include but not be limited to a liability insurance policy premium and an insurance premium for a policy to cover repair and reconstruction work in case of hurricane, fire, earthquake or other hazard. Assessments shall conform to the requirements of AS 34.08.460(b-f) taking into account, and applying said statute, with the understanding there is no common interest community or declaration, but rather Thunder Mountain is an alternative residential subdivision pursuant to CBJ Code 49.15. Assessments constitute liens on the unit-lots. Assessments and liens are enforceable in the same manner as liens in AS 34.08.470, taking into account, and applying said statute, with the understanding there is no common interest community or declaration, but rather Thunder Mountain is an alternative residential subdivision pursuant to CBJ Code 49.15

Section 2. MAINTENANCE AND REPAIR

(a) Every owner must perform promptly all maintenance and repair work within his own unit, which, if omitted, would affect the project in its entirety or in a part belonging to other owners, being expressly responsible for the damages and liabilities that his failure to do so may engender.

(b) An owner shall reimburse the Association for any expenditure incurred in repairing or replacing any common area and facility damaged through his own fault.

(c) The Association and the Board of Directors of the Association shall repair and maintain the common areas and facilities as set forth in Article X herein.

VII.
AMENDMENTS

These Bylaws may be amended by the Board of Directors or by the Association in a duly constituted meeting for such purpose, and no amendment shall take effect unless approved by at least sixty percent (60%) of the unit-lots in the Delta Drive Subdivision. All amendments must conform to City and Borough of Juneau Land Use Code Title 49 Article IX.

VIII.
MORTGAGES

Section 1. NOTICE TO ASSOCIATION

An owner who mortgages his condominium shall notify the Association through the Management Agent, if any, or the President of the Board of Directors, in the event there is no Management Agent, of the name and address of his mortgagee; and the Association shall maintain

such information in a book entitled "Mortgagees of Unit-Lots". Any such owner shall likewise notify the Association as to the release or discharge of any such mortgage.

Section 2. NOTICE OF UNPAID ASSESSMENTS

The Association shall, at the request of a mortgagee of a unit-lot, report any unpaid assessments due from the owner of such unit-lot.

IX.
APPLICABLE LAW

In case any of these Bylaws conflict with any provisions of the laws of the State of Alaska, such conflicting Bylaw shall be null and void, but all other Bylaws shall remain in full force and effect.

X.
MANAGEMENT OF COMMON AREAS

The Association shall own, repair, maintain and manage unit-lot 1, blanket easement, perimeter buffers and drainage easement shown on Plat _____, as well as any and all common areas and facilities. On behalf of the Association, the Board of Directors has the authority and responsibility to provide for the repair, maintenance, and management of unit-lot 1, blanket easement, perimeter buffers and drainage easement shown on Plat _____, as well as the water heater hut and mail boxes, and any and all common areas and facilities. The Board of Directors has the authority to determine, within the boundaries shown on Plat _____ to locate the utilities, drainage facilities, and ingress and egress access as well as any roads. The Board of Directors shall have the authority to establish such rules and regulations as it may see fit and which shall be binding on all Association members, to provide for the repair, maintenance, and management of unit-lot 1, blanket easement, perimeter buffers and drainage easement shown on Plat _____, as well as the water heater hut and mail boxes, and any and all common areas and facilities.

DATED this ___ day of _____, 2021.

_____
SECRETARY

CERTIFICATE OF SECRETARY

I, the undersigned, do hereby certify that:

1. I am the duly elected and acting Secretary of the Thunder Mountain Views HOA, Inc, an Alaska nonprofit corporation.

2. The foregoing Bylaws, comprising of ____ (__) pages, including this page, constitute the Bylaws of the corporation duly adopted at the meeting of the Board of Directors thereof duly held on the ___ day of ____, 2021.

IN WITNESS WHEREOF, I have hereunto subscribed my name and affixed the seal of the corporation this ___ day of _____, 2021.

_____
SECRETARY

Invitation to Comment

On a proposal to be heard by the CBJ Planning Commission

Your Community, Your Voice

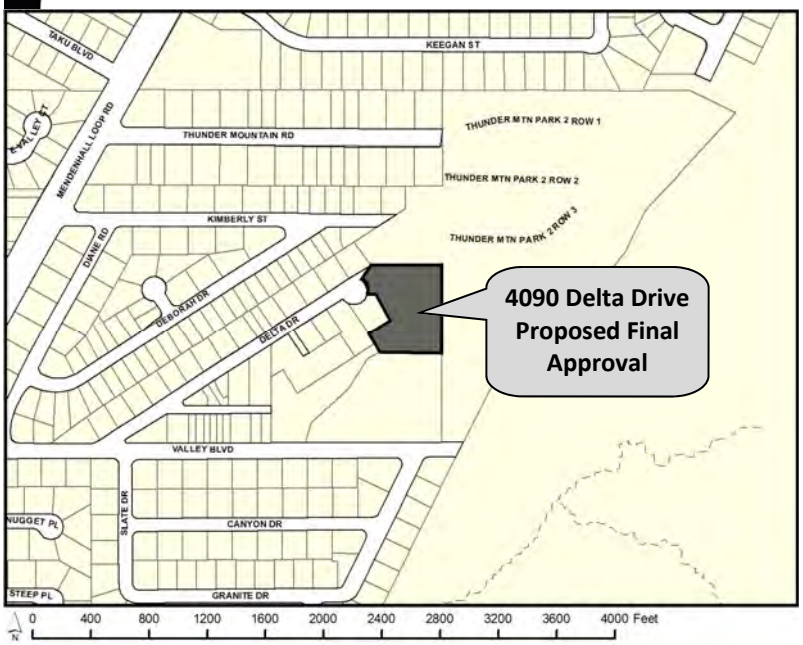

CITY AND BOROUGH OF JUNEAU
ALASKA'S CAPITAL CITY
COMMUNITY DEVELOPMENT

155 S. Seward Street Juneau, Alaska 99801

TO:

An application has been submitted for consideration and public hearing by the Planning Commission for **final subdivision approval for the Delta Drive Subdivision, an Alternative Residential Subdivision creating 14 unit lots and 1 parent lot** at **4090 Delta Drive** in a **D18 zone**.

TIMELINE

Staff Report expected to be posted **Monday, May 3, 2021** at **https://juneau.org/community-development/planning-commission.** Find hearing results, meeting minutes and more here as well.

Now through April 19	April 20 — noon, May 10	HEARING DATE & TIME: 7:00 pm, May 11, 2021	May 12
Comments received during this period will be sent to the Planner, **Laurel Christian**, to be included as an attachment in the staff report.	Comments received during this period will be sent to Commissioners to read in preparation for the hearing.	This virtual meeting will be by video and telephonic participation only. To join the Webinar, visit: https://juneau.zoom.us/j/91520615798. The Webinar ID is: 915 2061 5798. To join by telephone, call: +1 253 215 8782 or +1 346 248 7799 or +1 669 900 6833 or +1 301 715 8592 or +1 312 626 6799 or +1 929 436 2866 and enter the Webinar ID.	The results of the hearing will be posted online.

Phone: **(907)586-0715** ◆ Email: **pc_comments@juneau.org**
Mail: **Community Development, 155 S. Seward St, Juneau AK 99801**

Printed April 7, 2021

Case No.: SMF2021 0002; ARF2021 0001
Parcel No.: 5B2401620011
CBJ Parcel Viewer: http://epv.juneau.org

Laurel Christian

From: dblommer@bicknellinc.com
Sent: Monday, April 26, 2021 10:26 AM
To: Laurel Christian
Subject: Notice - Planning commission
Attachments: 20210422_124718.jpg

EXTERNAL E-MAIL: BE CAUTIOUS WHEN OPENING FILES OR FOLLOWING LINKS

Hi Laurel,

See attached photo of the sign at Delta. Let me know if you need anything else.

Thanks,
David

Laurel Christian

From: Laurel Christian
Sent: Monday, April 12, 2021 11:56 AM
To: 'rhondaward1@gmail.com'
Subject: RE: DRAINAGE COMMENTS DELTA DRIVE SUBDIVISION 4090 DELTA DRIVE

Hello Rhonda,

Thank you for reaching out. As part of the subdivision review, the developer is required to submit a drainage plan. Drainage for the new development will be routed to Delta Drive through new drainage swales and underground drains.

I hope this addresses your question/concern, please feel free to reach out with anything further.

Thank you,

Laurel Christian | Planner II
Community Development Department | City & Borough of Juneau, AK
Location: 230 S. Franklin Street | 4th Floor Marine View Building
Office: 907.586.0761

Fostering excellence in development for this generation and the next.

From: rhonda ward <rhondaward1@gmail.com>
Sent: Saturday, April 10, 2021 2:20 PM
To: PC_Comments <PC_Comments@juneau.org>
Subject: DRAINAGE COMMENTS DELTA DRIVE SUBDIVISION 4090 DELTA DRIVE

EXTERNAL E-MAIL: BE CAUTIOUS WHEN OPENING FILES OR FOLLOWING LINKS

Hello
I am concerned if proper drainage has been address to prevent flooding on the other side of the property closest to Thunder Mountain road. This section has a ditch that already has drainage issues. I hoping that this development will help improve that drainage.
RHonda Ward
3155978805

Planning Commission

(907) 586-0715
PC_Comments@juneau.org
www.juneau.org/plancomm
155 S. Seward Street • Juneau, AK 99801

PLANNING COMMISSION
NOTICE OF DECISION

Date: January 25, 2021
File No.: ARP2020 0001

Bicknell, Inc.
Attn: David Blommer
P.O. Box 33517
Juneau, AK 99803

Proposal:	Applicant proposes an Alternative Residential Subdivision creating 15 lots
Property Address:	4090 Delta Drive
Legal Description:	Thunder Mountain Park Tract 1A
Parcel Code No.:	5B2401620011
Hearing Date:	January 12, 2021

The Planning Commission, at its regular public meeting, adopted the analysis and findings listed in the attached memorandum dated December 29, 2020, and late file memorandum (provided January 12, 2021) with amendments and approved the Alternative Residential Subdivision Preliminary Plan for a 15-lot subdivision to be conducted as described in the project description and project drawings submitted with the application (and with the following conditions :)

1. Prior to approval of the Final Alternative Residential Subdivision Plan, the applicant shall submit homeowners association, or similar, documents that comply with the requirements of 49.15.950(b);
2. Prior to the issuance of the eleventh (11) temporary certificate of occupancy for the development, access to and within the development shall be paved;
3. Prior to the issuance of the first temporary certificate of occupancy, the master water meter for the development shall be installed by the developer; and
4. Per CBJ 49.15.920(o), the final mailbox location shall be reviewed and approved by the CDD Director, and installed prior to the issuance of the first temporary certificate of occupancy.

Attachments: December 29, 2020, memorandum from Laurel Christian, Community Development, to the CBJ Planning Commission regarding ARP2020 0001; and memorandum from Jill Maclean, Director, AICP, Community Development regarding ARP2020 0001 and SMP2020 0004 provided January 12, 2021.

This Notice of Decision does not authorize construction activity. Prior to starting any project, it is the applicant's responsibility to obtain the required building permits.

This Notice of Decision constitutes a final decision of the CBJ Planning Commission. Appeals must be brought to the CBJ Assembly in accordance with CBJ §01.50.030. Appeals must be filed by 4:30 P.M. on the day twenty days from the date the decision is filed with the City Clerk, pursuant to CBJ §01.50.030 (c). Any action by the applicant in reliance on the decision of the Planning Commission shall be at the risk that the decision may be reversed on appeal (CBJ §49.20.120).

Effective Date: The permit is effective upon approval by the Commission, January 12, 2021.

Expiration Date: The permit will expire 18 months after the effective date, or July 12, 2022, if no Building Permit has been issued and substantial construction progress has not been made in accordance with the plans for which the development permit was authorized. Application for permit extension must be submitted thirty days prior to the expiration date.

Michael LeVine, Chair Planning Commission	January 26, 2021 Date
Filed With City Clerk	January 26, 2021 Date

cc: Plan Review

NOTE: The Americans with Disabilities Act (ADA) is a federal civil rights law that may affect this development project. ADA regulations have access requirements above and beyond CBJ-adopted regulations. Owners and designers are responsible for compliance with ADA. Contact an ADA - trained architect or other ADA trained personnel with questions about the ADA: Department of Justice (202) 272-5434, or fax (202) 272-5447, NW Disability Business Technical Center (800) 949-4232, or fax (360) 438-3208.

CITY AND BOROUGH OF JUNEAU
ALASKA'S CAPITAL CITY
COMMUNITY DEVELOPMENT

PLANNING COMMISSION STAFF REPORT
ALTERNATIVE RESIDENTIAL SUBDIVISION PLAN
ARP2020 0001
HEARING DATE: JANUARY 12, 2020

(907) 586-0715
CDD_Admin@juneau.org
www.juneau.org/CDD
155 S. Seward Street • Juneau, AK 99801

DATE: December 29, 2020

TO: Michael LeVine, Chair, Planning Commission

BY: Laurel Christian, Planner II

THROUGH: Jill Maclean, Director, AICP

PROPOSAL: Preliminary Plan approval for the Delta Drive Subdivision, an Alternative Residential Subdivision creating 14 unit-lots and 1 parent lot

STAFF RECOMMENDATION: Approval with conditions

KEY CONSIDERATIONS FOR REVIEW:

- 14 lots will be for single-family dwellings.
- The remaining parent lot will contain the perimeter buffer, privately maintained access road, and other common amenities.
- A density bonus is not requested.
- The proposed perimeter buffer is equal to the setbacks for the zoning district.
- This approval is subject to SMP20200004.

GENERAL INFORMATION	
Property Owner	Bicknell Inc.
Applicant	Bicknell Inc.
Property Address	4090 Delta Drive
Legal Description	Thunder Mountain Park Tract 1A
Parcel Number	5B2401620011
Zoning	D18 Multi-family Residential
Lot Size	79,189 sq. ft.
Water/Sewer	Public
Access	Delta Drive
Existing Land Use	Vacant
Associated Applications	SMP20200004

ALTERNATIVE ACTIONS:

1. **Amend:** require additional conditions, or delete or modify the recommended conditions.
2. **Deny:** deny the permit and adopt new findings for items 1-14 below that support the denial.
3. **Continue:** to a future meeting date if determined that additional information or analysis is needed to make a decision, or if additional testimony is warranted.

ASSEMBLY ACTION REQUIRED:

Assembly action is not required for this permit.

STANDARD OF REVIEW:

- Quasi-judicial decision
- Requires five (5) affirmative votes for approval
- Code Provisions:
  - 49.15.920
  - 49.15.930
  - 49.15.940

The Commission shall hear and decide the case per *49.15.900 - Purpose.* *The general purpose of this article is to provide reasonable minimum standards and procedures for unit-lot residential communities in which all or some of the lots do not substantially conform to the minimum requirements for a traditional subdivided lot. This article provides a housing option to allow dwellings on unit-lots to be conveyed by long-term leases, less than fee-simple ownership, or fee-simple ownership, including condominium and other common-interest communities*

SITE FEATURES AND ZONING

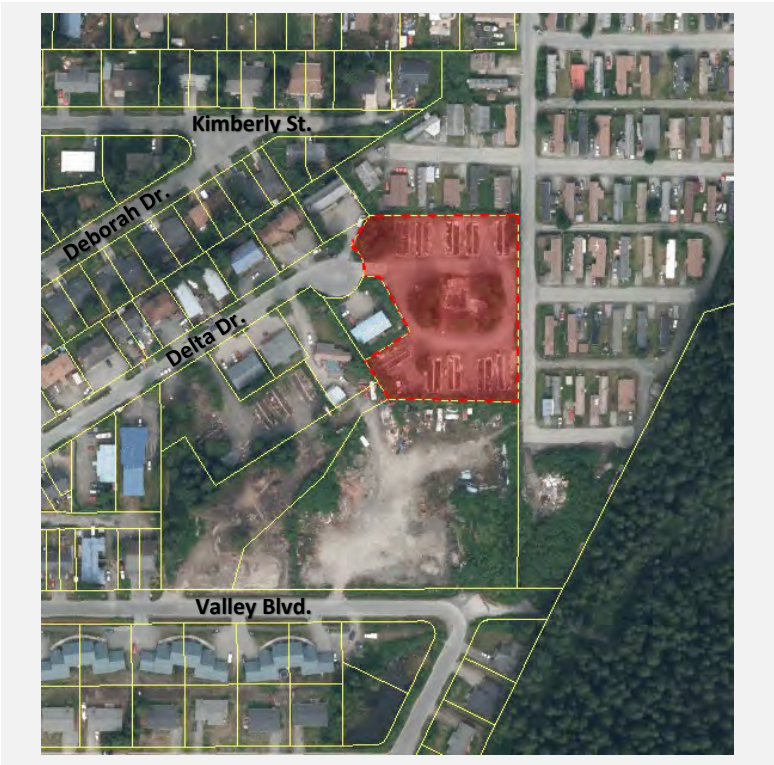

SURROUNDING ZONING AND LAND USES	
North (D18)	Thunder Mountain Mobile Home Park
South (D18)	Vacant
East (D18)	Thunder Mountain Mobile Home Park
West (D18)	Multi-family four-plex

SITE FEATURES	
Anadromous	None
Flood Zone	None
Hazard	None
Hillside	None
Wetlands	None
Parking District	None
Historic District	None
Overlay Districts	None

BACKGROUND INFORMATION

Project Description – The applicant requests a preliminary plan approval for the Delta Drive Subdivision, an Alternative Residential Subdivision (ARS) creating 15 lots. The proposal would create 14 unit-lots for single-family dwellings and one (1) parent-lot containing the perimeter buffer, privately maintained access road, and other common amenities (15 lots total).

A project narrative can be found in Attachment A and the preliminary plan can be found in Attachment B.

Background – Background information includes a discussion of the basics of the ARS, the process for approval, and relevant development history for the lot.

ARS Design Basics

The ARS provides flexibility in land use regulations in order to promote its most appropriate use for unit-lot residential communities: to encourage residential developments that are planned, designed and developed to function as integral units with common facilities.

The ARS facilitates the construction of housing in a flexible design through:

- Allowing smaller-than-required lot sizes;
- Providing density bonuses for certain amenities if desired; and
- Allowing private streets and utilities to serve the community.

There are two types of lots in an ARS:

- *Parent lot means the original lot and the residual area from which unit-lots are created through an alternative residential subdivision.*
  - The parent lot has the original lot boundaries; provides a buffer between unit lots and surrounding development, and access to unit lots; and may be developed with common amenities [CBJ 49.15.920(m)].
  - The perimeter buffer on the parent lot provides at least the minimum required yard setbacks of the zoning district. The Commission may enlarge or reduce a buffer in certain circumstances [CBJ 49.15.920(j)].

- *Unit-lot means any lot, site, parcel, unit-site, and similar geographically defined property that is created through an alternative residential subdivision and that is substantially smaller than the minimum lot size required for the zoning district.*
  - The unit lots are the small lots within an ARS that are platted for residential uses. Unit lots have no dimensional requirements.
  - Unit lots may only be developed with single-family dwellings, or single-family dwellings with accessory apartments, home occupations, or childcare homes in certain circumstances [CBJ 49.15.920(m)].

In the image below, the parent lot is highlighted in yellow and the unit lots are highlighted in blue. The preliminary plan can be found in Attachment B.

ARS Process

The ARS process requires two preliminary applications, both of which are being presented at the same Planning Commission meeting.

- This application (ARP20200001) is for review of the preliminary *plan* for the ARS. This application must be acted upon first. The plan is reviewed for compliance with applicable ARS code and design guidelines [CBJ 49.15.900].
- A separate application (SMP20200004) is for approval of the preliminary *plat* for the ARS. The plat is reviewed for compliance with subdivision code [CBJ 49.15.402].

If the preliminary plan and preliminary plat are approved, the developer may apply for review of the ARS final plan and ARS final plat. These two applications may be presented at the same public meeting, or separately. The purpose of a second review by the Commission is to ensure the final plan conforms with the approved preliminary plan and that any conditions of approval have been met.

Development History

The table below summarizes relevant history for the lot and proposed development.

Item	Summary
Plat History	In 1992, the lot was platted as an expansion of the Thunder Mountain Park (plat no. 92-18). No restrictive plat notes exist for the lot.
Land Use Cases	In 1992, a conditional use permit (CUP) was issued to expand the Thunder Mountain Mobile Home park onto the lot (USE-CU92-01). In 2013, another CUP was issued for a 12-unit apartment building on the lot; this permit expired (USE20130017). The lot is currently vacant.
Building Permits	In 1992, a building permit was issued to place 10 modular homes on permanent concrete foundations (BLD-0747301). In 2013, a demolition permit was issued to remove the modular homes (DMO20130007). The lot currently contains the 10 concrete foundations with no modular structures. The applicant intends to repurpose the foundations.

ANALYSIS

Phasing – The proposed ARS will not be phased.

Zoning District and Dimensional Standards – The parent lot meets or exceeds dimensional requirements for an ARS in the D18 zoning district.

Topic and Code Reference	Summary	Complies
49.15.920(b) Zoning Districts	The lot is within the D18 multi-family zoning district. ARS is allowed in this zoning district.	☒ Yes ☐ No ☐ N/A
49.15.920(c) Lot Size	The parent lot measures 79,189 square feet and exceeds the required 150 percent times the minimum lot size for the D18 zoning district (5,000 square feet).	☒ Yes ☐ No ☐ N/A

Topic and Code Reference	Summary	Complies
49.15.920(d) Other Dimensional Standards	The minimum lot dimensions, lot coverage, and vegetative coverage shall be applied to the parent lot and not the unit-lots. Preliminary construction drawings show these requirements can reasonably be met.	☒ Yes ☐ No ☐ N/A

Density – Per 49.15.920(e)(1), *The number of dwelling units permitted in the development shall be calculated by multiplying the maximum number of dwelling units per gross acre permitted in the underlying zoning district by the number of acres in the alternative residential subdivision and rounding to the nearest whole number.*

Maximum Dwelling Units Per Acre	Parent Lot Size	Maximum Density	Number of Dwelling Units Proposed
18	79,189 sq. ft. (1.8179 acres)	33 dwelling units	**14**

The proposed ARS creates 14 unit-lots for single-family dwellings and one (1) parent-lot for common elements. As demonstrated in the table above, the applicant is not exceeding the maximum allowed density for the zoning district.

Density Bonus – The applicant has not requested a density bonus.

Frontage and Access – Per 49.15.920(f), *The parent lot shall front on and be accessed by a publically maintained right-of-way. Access within the development may be exempted from 49.35 and be privately owned and maintained if it complies with the following requirements* (listed in the table below).

The parent lot has frontage and access onto Delta Drive, a CBJ right-of-way. The applicant proposes a privately maintained access within the ARS. The privately maintained access will be 20 feet in width and paved. The proposed access complies with CBJ 49.15.920(f), as discussed in the table below.

Topic and Code Reference	Summary	Complies	Recommended Condition
49.15.920(f)(1) Location	As shown on the preliminary construction drawings, the access road will be located completely on the parent lot.	☒ Yes ☐ No ☐ N/A	
49.15.920(f)(2) Safety	There is no information that suggests the proposed access will endanger public safety.	☒ Yes ☐ No ☐ N/A	
49.15.920(f)(3) Emergency Services	CCFR has reviewed the preliminary construction drawings and finds the proposed access is sufficient for emergency service response.	☒ Yes ☐ No ☐ N/A	
49.15.920(f)(4) Pavement	As shown on the preliminary construction drawings, the applicants propose a 20-foot wide asphalt surface.	☒ Yes ☐ No ☐ N/A	**Condition: Prior to the issuance of the first temporary certificate of occupancy, access to and within the development shall be paved.**

49.15.920(f)(5) Homeowners Association (HOA)	The ARS requires an HOA, or similar entity be created for the development. The HOA documents should be submitted with the final ARS plan. It is recommended that the applicant submit HOA, or similar, documents prior to approval of the final plan. The HOA documents shall establish that maintenance of the private access is the responsibility of the HOA.	☒ Yes ☐ No ☐ N/A	**Condition: Prior to approval of the Final Alternative Residential Subdivision Plan, the applicant shall submit homeowners association, or similar, documents that comply with the requirements of 49.15.950(b).**
49.15.920(f)(6) Abutting Parcels	All abutting parcels have direct and practical access onto an existing publically maintained right-of-way, so no new public rights-of-way are required.	☒ Yes ☐ No ☐ N/A	

Utilities, Drainage, and Stormwater Management – The applicant has submitted preliminary construction drawings, a preliminary water-line memo, and a preliminary drainage report (Attachment C, D, and E)**.** There are 10 existing water and sewer services. The applicant will be required to connect each unit-lot to public water and sewer; the parent-lot is currently connected to water and sewer. After approval of the preliminary plan and preliminary plat, the applicant will submit final construction drawings for review and approval by CBJ Engineering & Public Works. Utilities, drainage, and stormwater management are further discussed in the staff report for SMP20200004.

Topic and Code Reference	Summary	Complies	Recommended Condition
49.15.920(g) Public Utilities	Preliminary construction drawings show each lot will be connected to public water and sewer and a master meter will be installed.	☒ Yes ☐ No ☐ N/A	**Prior to the issuance of the first temporary certificate of occupancy, each dwelling unit shall be connected to public sewer and water, and a master meter for water shall be installed by the developer.**
49.15.920(l) Stormwater Management	Preliminary construction drawings demonstrate water will be collected into drainage swales and underground storm drains, which connect to the existing drainage systems in Delta Drive.	☒ Yes ☐ No ☐ N/A	

Design Requirements – The table below discusses design requirements applied to an ARS. The proposed ARS meets these requirements.

Topic and Code Reference	Summary	Complies	Recommended Condition
49.15.920(i) Open Space	The applicant does not propose common open space for the development. Open space is not required for an ARS in the D18 zoning district.	☐ Yes ☐ No ☒ N/A	
49.15.920(j) Perimeter Buffer	The preliminary plan shows a perimeter buffer surrounding the development that matches the setback requirements for the D18 zoning district. Staff does not recommend an increase in the required perimeter buffer. The proposed ARS is bordered by multi-family development and matches the character of the neighborhood. No density bonus has been requested, and the proposed ARS creates fewer units than the maximum density for the lot.	☒ Yes ☐ No ☐ N/A	
49.15.920(m) Permitted Uses	The applicant proposes single-family residential use. There is one unit-lot within the ARS that meets the minimum lot size for the D18 zoning district (Lot 12). This lot could accommodate a single-family dwelling with an accessory apartment. All other unit-lots would be restricted to one single-family dwelling.	☒ Yes ☐ No ☐ N/A	
49.15.920(n) Street Sign	The CBJ GIS Analyst does not recommend assigning the private access within the ARS a new street name, since it functions as an extension of Delta Drive. Each unit-lot will be assigned a Delta Drive address.	☐ Yes ☐ No ☒ N/A	
49.15.920(o) Mailboxes	Staff met on-site with the applicant and USPS on November 10, 2020. The USPS requested one centralized mailbox for all units that is located outside of the gate to the development, with adequate space for USPS vehicles to turn	☒ Yes ☐ No ☐ N/A	**Condition: Per CBJ 49.15.920(o) the final mailbox location shall be reviewed and approved by the CDD Director, and installed prior to the issuance of the first temporary certificate of occupancy.**

Topic and Code Reference	Summary	Complies	Recommended Condition
	around. Per CBJ 49.15.920(o) the final mailbox location shall be reviewed and approved by the CDD Director. This should be shown on final construction drawings.		

Parking– According to 49.15.920(h), *Parking may be located on the parent lot or unit lots.* Two parking spaces are required for each single-family dwelling [49.40.210(a)]. Preliminary construction drawings show two parking spaces on each unit-lot, some provided in a stacked configuration. Stacked parking is allowed for single-family residential uses [49.40.230(b)(6)].

Traffic – According to CBJ 49.40.300(a)(2) a traffic impact analysis is not required; the development is not anticipated to generate more than 250 Average Daily Trips.

Use	Units	Trips Generated	Total Trips
Single-family	14	9.52 per dwelling	**133.28**

Habitat – There are no known anadromous streams or wetlands on the lot.

Hazard Zones – There are no hazard zones on the lot.

Public Health, Safety, and Welfare – There is no information that suggests the proposed ARS will harm the public health, safety, or welfare.

Property Value and Neighborhood Harmony – The CBJ Assessor stated no objections to the proposed development. There is no information that suggests the proposed development will have a negative effect on property values in the neighboring area.

The lot is located in the D18 zoning district and surrounded primarily by multi-family residential uses. A zoning map can be found in Attachment F. To the north and east is the Thunder Mountain Mobile Home park, to the south is a vacant lot which appears to be used to store construction materials, and to the west is Delta Drive, which is developed primarily with multi-family residential development. To the northwest, Deborah Drive and Kimberly Street are developed primarily with single-family dwellings within the D5 zoning district; these streets do not directly abut the proposed development.

The proposed ARS would create 14 unit-lots for single-family dwellings. The maximum density of the lot, unsubdivided, would be 33 dwelling units. The proposal is not out of character with the existing neighborhood.

AGENCY REVIEW

CDD conducted an agency review comment period between October 15 and October 31, 2020. Comments from Engineering and Public Works, the CBJ Cartographer, and Capital City Fire and Rescue are incorporated into this report. No additional comments were received.

PUBLIC COMMENTS

CDD conducted a public comment period between December 7 and December 21, 2020. Public notice was mailed to property owners within 500 feet of the subject parcel. A public notice sign was also posted on-site two weeks prior to the scheduled hearing. At time of writing this staff report, no public comments were received.

CONFORMITY WITH ADOPTED PLANS

The proposed development is in general conformity with the 2013 Comprehensive Plan, 2016 Housing Action Plan, and the 2015 Juneau Economic Development Plan. Plans call for the development of housing, especially in a flexible format that fits the character of existing neighborhoods and provides housing for a variety of CBJ residents and economic groups.

PLAN	Chapter	Page No.	Item	Summary
2013 Comprehensive Plan	4	36-37	Policy 4.1/4.2	Policies promote providing an adequate supply of various types of housing for all CBJ residents and economic groups.
	10	130	Policy 10.2	Policy promotes flexibility and creativity in residential development within the urban service boundary.
	11	157	Land Use Designation	Complies with the *Medium Density Residential* land use designation which allows for residential development between 5-20 units per acre (Attachment F).
2016 Housing Action Plan	Part 2	35	Production Target	The Housing action plan sets an annual goal of 66 new dwelling units. Proposal creates 14 new housing units.
2015 Juneau Economic Development Plan	5	103	Initiative	Plan calls for promoting housing affordability and availability.

FINDINGS

Alternative Residential Subdivision Preliminary Plan Approval – Per CBJ 49.15.940(d), the director makes the following findings on the proposed Alternative Residential Subdivision Preliminary Plan:

1. ***Does the proposed development protect natural features and avoid natural hazards by reserving them as open space?***

   Analysis: There are no natural features of the lot or natural hazards that should be preserved as open space.

   Finding: Not applicable.

2. ***Is the proposed development consistent with Title 49, the Land Use Code?***

   Analysis: No further analysis needed.

   Finding: Yes. With recommended conditions, the proposed development is consistent with Title 49.

3. **Does the development incorporate perimeter buffers sufficient to minimize off-site impacts of the subdivision and to maximize harmony with the neighborhood?**

   Analysis: The proposed development incorporates a perimeter buffer equal to the setbacks required for the D18 zoning district. The lot is surrounded by multi-family development and is not being developed to the maximum density allowed. Staff finds the perimeter buffer is adequate to ensure neighborhood harmony.

   Finding: Yes. The proposed development incorporates perimeter buffers sufficient to minimize off-site impacts and maximize neighborhood harmony.

4. ***Do utilities proposed for connection to the City and Borough system meet City and Borough standards, and all others are consistent with sound engineering practices, as determined by the City and Borough Engineering and Public Works Department?***

   Analysis: No additional analysis required.

   Finding: Yes. The CBJ Engineering & Public Works Department has reviewed preliminary construction plans and has determined that the development can reasonably connect to CBJ services and meet CBJ standards.

5. ***Does the configuration of the development provide for economy and efficiency in utilities, housing construction, access, parking and circulation?***

   Analysis: The proposal will develop a lot that has been vacant since 2013. The development will repurpose existing foundations and utilities provided to the lot. The proposal provides in-fill housing development that meets the standards of Title 49 and provides small lots for small homes, creating an opportunity for efficient and affordable construction of housing units.

   Finding: Yes. The proposed development maximizes economy and efficiency in utilities, housing construction, access, parking and circulation.

6. ***If the approval is for a phased development, is each phase consistent with the preliminary development plan and design of the entire alternative residential subdivision?***

   Analysis: The proposed ARS is not phased.

   Finding: Not applicable.

7. ***Does the proposed development adequately address the cumulative impacts of the phased development on the neighborhood and the natural environment?***

   Analysis: The proposed ARS is not phased.

   Finding: Not applicable.

8. ***If the approval includes an allotment of a density bonus, the density bonus complies with section 49.15.920(e)(4).***

   Analysis: A density bonus has not been requested.

   Finding: Not applicable.

Additionally, in accordance with CBJ 49.15.930 and CBJ 49.15.330 (e) & (f), the director makes the following findings on the proposed Alternative Residential Subdivision Preliminary Plan:

9. Is the application for the requested Alternative Residential Subdivision Preliminary Plan complete?

Analysis: No further analysis needed.

Finding: Yes. The application contains the information necessary to conduct full review of the proposed operations. The application submittal by the applicant, including the appropriate fees, substantially conforms to the requirements of CBJ Chapter 49.15.

10. Is the proposed use appropriate according to the Table of Permissible Uses?

Analysis: The application is for single-family dwellings. The use is listed at CBJ 49.25.300, Section 1.100 for the D18 zoning district.

Finding: Yes. The requested permit is appropriate according to the Table of Permissible Uses.

11. Will the proposed development comply with the other requirements of this chapter?

Analysis: The proposed site design complies with parking, vegetative cover, buffer, utility, and other requirements of Title 49.

Finding: Yes. With the recommended conditions, the proposed development will comply with Title 49, including parking, lighting, vegetative cover, and ARS design requirements.

12. Will the proposed development materially endanger the public health, safety, or welfare?

Analysis: No additional analysis required.

Finding: No. There is no evidence to suggest that with appropriate conditions, the requested ARS in a D18 zoning district, will materially endanger the public health or safety.

13. Will the proposed development substantially decrease the value of or be out of harmony with property in the neighboring area?

Analysis: No additional analysis required.

Finding: No. There is no evidence to suggest that with appropriate conditions, the requested ARS, in a D18 zoning district will substantially decrease the value or be out of harmony with the property in the neighboring area.

14. Will the proposed development be in general conformity with the land use plan, thoroughfare plan, or other officially adopted plans?

Analysis: The proposed ARS creates additional housing, plans and policies generally support housing development.

Finding: Yes. The proposed ARS, with the recommended conditions, will be in general conformity with the 2013 Comprehensive Plan, 2016 Housing Action Plan, and the 2015 Juneau Economic Development Plan.

RECOMMENDATION

Staff recommends the Planning Commission adopt the director's analysis and findings and **APPROVE** the preliminary plan for the Delta Drive Subdivision, an Alternative Residential Subdivision creating 14 unit-lots and one (1) parent lot. This permit would allow the applicant to submit for the final plan.

This approval is subject to the following conditions:

1. Prior to approval of the Final Alternative Residential Subdivision Plan, the applicant shall submit homeowners association, or similar, documents that comply with the requirements of 49.15.950(b);
2. Prior to the issuance of the first temporary certificate of occupancy for the development, access to and within the development shall be paved;
3. Prior to the issuance of the first temporary certificate of occupancy, each dwelling unit shall be connected to public sewer and water, and a master meter for water shall be installed by the developer; and
4. Per CBJ 49.15.920(o), the final mailbox location shall be reviewed and approved by the CDD Director, and installed prior to the issuance of the first temporary certificate of occupancy.

STAFF REPORT ATTACHMENTS

Item	Description
Attachment A	Application Packet
Attachment B	Preliminary Plan
Attachment C	Preliminary Construction Drawings
Attachment D	Water Memorandum
Attachment E	Preliminary Drainage Report
Attachment F	Zoning Map and Comprehensive Plan Land Use Designation Map
Attachment G	Abutters Notice and Public Notice Sign

CITY AND BOROUGH OF JUNEAU
ALASKA'S CAPITAL CITY
COMMUNITY DEVELOPMENT

DEVELOPMENT PERMIT APPLICATION

NOTE: Development Permit Application forms must accompany all other Community Development Department land use applications.

To be completed by Applicant

PROPERTY LOCATION

Physical Address
4090 Delta Drive, Juneau, AK 99801

Legal Description(s) (Subdivision, Survey, Block, Tract, Lot)
Thunder Mountain Park TR 1A

Parcel Number(s)
5B2401620011

☐ This property located in the downtown historic district
☐ This property located in a mapped hazard area, if so, which _____

LANDOWNER / LESSEE

Property Owner	Contact Person
Bicknell, Inc.	David Blommer

Mailing Address	Phone Number(s)
P.O. Box 33517	
E-mail Address: dblommer@bicknellinc.com	907-789-5727

LANDOWNER/ LESSEE CONSENT Required for Planning Permits, not needed on Building/ Engineering Permits

I am (we are) the owner(s)or lessee(s) of the property subject to this application and I (we) consent as follows:

A. This application for a land use or activity review for development on my (our) property is made with my complete understanding and permission.
B. I (we) grant permission for officials and employees of the City and Borough of Juneau to inspect my property as needed for purposes of this application.

X _____ Landowner/Lessee Signature — Date 10/8/20

X _____ Landowner/Lessee Signature — Date _____

NOTICE: The City and Borough of Juneau staff may need access to the subject property during regular business hours and will attempt to contact the landowner in addition to the formal consent given above. Further, members of the Planning Commission may visit the property before the scheduled public hearing date.

APPLICANT (if the same as owner, enter "SAME")

Applicant	Contact Person
SAME	SAME

Mailing Address	Phone Number(s)
SAME	
E-mail Address: SAME	

X _____ Applicant's Signature — Date of Application _____

----------DEPARTMENT USE ONLY BELOW THIS LINE----------

RECEIVED
OCT 12 2020
PERMIT CENTER/CDD

Intake Initials
LEC

This form and all documents associated with it are public record once submitted.

INCOMPLETE APPLICATIONS WILL NOT BE ACCEPTED

For assistance filling out this form, contact the Permit Center at 586-0770.

Case Number	Date Received
SMP20200004	10/12/20

CITY AND BOROUGH OF JUNEAU
ALASKA'S CAPITAL CITY
COMMUNITY DEVELOPMENT

SUBDIVISION AND DEVELOPMENT PLAN APPLICATION

See subdivision hand-outs for more information regarding the permitting process and the materials required for a complete application.

NOTE: Must be accompanied by a DEVELOPMENT PERMIT APPLICATION form.

To be completed by Applicant

PROJECT SUMMARY

An alternative residential subdivision (ARS) of Thunder Mountain Park TR 1A into Delta Drive Subdivision comprised of 15 unit lots and 1 parent lot.

Number of Existing Parcels 1 Total Land Area 1.82 acres Number of Resulting Parcels 16

HAS THE PARCEL BEEN CREATED BY A MINOR SUBDIVISION IN THE PRECEDING 24 MONTHS

○ NO ○ YES Case Number _____

TYPE OF SUBDIVISION OR PLATTING APPROVAL REQUESTED

MINOR DEVELOPMENT
(changing or creating 13 or fewer lots)

- ○ Preliminary Plat (MIP)
- ○ Final Plat (MIF)
- ○ Panhandle Subdivision
- ○ Accretion Survey
- ○ Boundary Adjustment
- ○ Lot Consolidation (SLC)
- ○ Bungalow Lot Subdivision
- ○ Common Wall/Zero Lot Subdivision
- ○ Other _____

MAJOR DEVELOPMENT
(changing or creating 14 or more lots)

- ⊗ Preliminary Plat (SMP)
- ○ Final Plat (SMF)
- ○ Preliminary Development Plan – PUD (PDP)
- ○ Final Development Plan – PUD (PDF)
- ○ Development Plan – ARS (ARP)
- ○ Development Plan – ARS (ARF)
- ○ Bungalow Lot Subdivision
- ○ Common Wall/Zero Lot Subdivision
- ○ Other _____

ALL REQUIRED DOCUMENTS ATTACHED

- ☑ **Pre-application conference notes**
- ☑ **Narrative including:**
  - ☑ Legal description(s) of property to be subdivided
  - ☑ Existing structures on the land
  - ☑ Zoning district
  - ☑ Density
  - ☑ Access
  - ☑ Current and proposed use of any structures
  - ☑ Utilities available
  - ☑ Unique characteristics of the land or structure(s)
- ☑ **Preliminary Plat checklist**

----------DEPARTMENT USE ONLY BELOW THIS LINE----------

SUBDIVISION/PLATTING FEES	Fees	Check No.	Receipt	Date
Application Fees	$ 1760.00			
Public Notice sign ~~Admin. of Guarantee~~	$ 150.00	Fee + Deposit		
Adjustment	$			
Total Fee	$ 1910.00			

Major Sub: $110 per lot x 16 lots

RECEIVED
OCT 12 2020
PERMIT CENTER/CDD

For assistance filling out this form, contact the Permit Center at 586-0770.

INCOMPLETE APPLICATIONS WILL NOT BE ACCEPTED

Case Number	Date Received
SMP20200004	10/12/20 LEC

PDC ENGINEERS

PLAN • DESIGN • CONSTRUCT

October 9, 2020

Laurel Christian, Planner II
City and Borough of Juneau
Community Development Department
155 S. Seward St.
Juneau, AK 99801

SUBJECT: Delta Drive Subdivision - Alternative Residential Subdivision
Project Narrative – PDC Project No. 20098JN

Dear Laurel;

On behalf of our client Bicknell Inc., PDC Engineers (PDC) is submitting this project narrative as part of the Delta Drive Subdivision Alternative Residential Subdivision (ARS) application. The property to be subdivided under the CBJ ARS code has a legal description of Thunder Mountain Park TR 1A with a land area of 79,189 square feet. Currently there are no dwelling structures on the property. Ten (10) existing concrete foundations exist on the property from where previous modular homes were located that have since been removed.

CBJ Zoning - The property is zoned D-18 Multifamily with an allowable density of 18 units per acre. The proposed use of the structures to be developed within the ARS will be residential and will meet the permissible uses as outlined for their zoning district and in the ARS code. The surrounding neighborhood is similarly zoned D-18 and is made up of single family and multi-family residences. The proposed development will be in harmony with the surrounding neighborhood.

Access - The existing parcel is accessed from the cul-de-sac at the end of Delta Drive, a CBJ owned and maintained paved roadway.

Utilities – CBJ public water and sanitary sewer utilities currently service the property. An existing 2-inch water line coming from the end of the existing 6-inch water line in Delta Drive supplies water to this property. Individual ¾" water services are located from the 2-inch line within the property serving the original 10 modular homes. A 6-inch PVC sanitary sewer line exists within the property acting as the sewer collector. This 6-inch sewer pipe connects to the CBJ sewer main located in the Delta Drive cul-de-sac. Individual 4-inch PVC sewer services coming from the building foundations connect to the 6-inch sewer. Under the CBJ Delta Drive Reconstruction project scheduled for construction in the Spring/Summer of 2021, new water and sanitary sewer utilities will be provided to the lot line of this property. An 8-inch PVC sewer service will be provided and an 8-inch HDPE water line. The Delta Drive Subdivision project will connect to these new services and extend into the subdivision. The existing sewer system has been found to be in good condition and will continue to be reused. Lots which previously did not have a 4-inch

Anchorage | Fairbanks | Juneau | Palmer | Soldotna
9109 Mendenhall Mall Road, Suite 4, Juneau, Alaska 99801
907.780.6060
www.PDCENG.com

RECEIVED
OCT 12 2020
PERMIT CENTER/CUD

sewer service will have a new ones installed. The subdivision has an existing 2" Poly water main serving the existing lots. PDC water system analysis (attached) indicates that the existing 2" water service can supply adequate flow and pressure to 7 dwelling units. There are two 2" Poly water line branches that will connect to the new 8" HDPE line. The existing 2" poly water line will be flushed, disinfected and pressure testing in compliance with CBJ Standards for domestic water supply. Existing ¾" water services will be used or new 1-inch Poly water services will be installed. A master water meter with vault structure will be installed prior to service lines.

Drainage – Surface storm water will be collected in drainage swales on the perimeter and interior lots of the property. The drainage system will involve construction of drainage swales, underground storm drain pipe and underdrain system to safely route the drainage to the existing Delta Drive drainage system which is planned for reconstruction in Spring/Summer 2021 by CBJ. As the designers for CBJ on the Delta Drive Reconstruction project, the storm drain improvements have been designed to accommodate the Delta Drive Subdivision storm drainage. There are two locations where storm drainage will discharge to Delta Drive, both of these locations have pipe sized at 12" diameter. Lots 11-15 will have a drainage swale near the rear of the property and then transition to an 8" underdrain in an existing 10' drainage easement that goes to a new culvert inlet being installed under the Delta Drive Reconstruction project. Lots 7-10 (new foundations) will be graded to drain to a drainage swale in the front of the lots where storm drainage will be collected and routed underground through a 12" drain pipe to the discharge location at the new culvert on Delta Drive. Lots 1-6 will have a perimeter drainage swale at the rear of the property that is graded to drain to the new culvert being installed under the CBJ Delta Drive Reconstruction project.

Parking and Circulation– Each lot will have two parking spaces as shown in the site plan. The existing gravel roadway will be reconstructed to accommodate a 20' wide paved access road through the property. This paved roadway will allow for safe and convenient emergency fire vehicle access throughout the subdivision.

Buffer/Setback – A perimeter buffer has been shown on the site plan with a new wooden fence located at the property line for screening and privacy. Buffers match the required setbacks for this zoning district.

Vegetative Cover – The parent lot has roughly 46% vegetative cover.

Lighting – Lighting will be installed on the individual structures.

Mailbox, Garbage and Snow Storage – CBJ Standard Mailboxes have been shown on Lot 1 to allow for each lot to have US Postal mail delivery. Two garbage dumpsters have been shown on Lot 1 to allow for refuse to be placed from each lot. Snow storage has been shown on Lot 1.

Should you have any questions or require any additional information, please do not hesitate to contact me at your convenience.

Sincerely,

J. Mark Pusich

J. Mark Pusich, PE
Principal | Civil/Structural Engineer
PDC Engineers

Attachments: ARS Application: CBJ Development Application, ARS Subdivision Preliminary Plat, Lot Closure Comps, Subdivision Application, Preliminary Plat Checklist, Pre-App meeting minutes, Construction Improvement Drawings

CITY AND BOROUGH OF JUNEAU
ALASKA'S CAPITAL CITY
COMMUNITY DEVELOPMENT

(907) 586-0715
CDD_Admin@juneau.org
www.juneau.org/CDD
155 S. Seward Street • Juneau, AK 99801

Delta Drive Alternative Residential Subdivision

Case Number: PAC20200026
Applicant: Spike Bicknell & David Blommer

Property Owner: Delta Park LLC

Property Address: 4090 Delta Drive

Parcel Code Number: 5B2401620011

Site Size: 79,189 Square Feet

Zoning: D-18

Existing Land Use: Manufactured Homes

Conference Date:	4/29/20
Report Issued:	**05/06/20**
List of Attendees	

Note: Copies of the Pre-Application Conference Report will be emailed, instead of mailed, to participants who have provided their email address below.

Name	Title	Email address
David Blommer	Applicant	dblommer@bicknellinc.com
Laurel Christian	Planning	Laurel.christian@juneau.org
Kyle Paw	Permit staff	Kyle.paw@juneau.org
Autumn Sapp	General Engineering	Autumn.Sapp@juneau.org
Mark Pusich	PDC	MarkPusich@pdceng.com

Conference Summary

Questions/issues/agreements identified at the conference that weren't identified in the attached reports. The following is a list of issues, comments and proposed actions, and requested technical submittal items that were discussed at the pre-application conference.

The Alternative Residential Subdivision (ARS) requires a two-step approval process. The ARS preliminary plan is reviewed the and then then ARS final plan is reviewed. A major subdivision application is also required. The applicant may apply for the preliminary ARS plan and preliminary major subdivision plat at the same time.

The preliminary ARS plan is reviewed through the conditional use permit process with additional requirements found in the ARS section of code. The major subdivision plat is reviewed for platting requirements. The ARS section of code is attached to this report, approval criteria are highlighted.

Planning Division

1. **Zoning** – D18 Zoning District. There is no minimum lot size for the unit lots, however; you should demonstrate on the plan their size, and show how large the parent parcel is. CBJ 49.80 Definitions for Parent Lot and Unit Lot:

   Parent lot means the original lot and the residual area from which unit-lots are created through an alternative residential subdivision.

   Unit-lot means any lot, site, parcel, unit-site, and similar geographically defined property that is created through an alternative residential subdivision and that is substantially smaller than the minimum lot size required for the zoning district

2. **Setback/buffer** – There are no setbacks for the unit lots. A perimeter buffer is required in lieu of the setback requirements of this title on the parent lot. The buffer shall not be less than the setbacks required for the zoning district. Setbacks for the D18 zoning district are: Front: 20'; Rear: 10'; Side: 5'; Street side:13'

   a. The commission may enlarge the required buffer to up to 25 feet.

   b. The buffer shall be vegetated unless the commission requires non-vegetated screening. A buffer may include fencing, natural berm, or other similar features.

   c. No parking areas, dwelling units, unit-lots, or permissible uses may be located within the perimeter buffer. Access to the development may cross a portion of the buffer.

3. **Height** – 35' primary uses; 25' accessory uses

4. **Parking & Circulation** – Each single-family dwelling requires 2 parking spaces. Residential parking lots with more than 10 parking spaces but fewer than 25 parking spaces require 1 ADA van accessible parking space.

   a. Parking can be either on the unit lots or on the parent lot. On the ARS plan, parking areas should be shown.

5. **Access** – Access to the ARS must be publically maintained (Delta Drive is a publically maintained right-of-way). Access within the ARS must be located completely on the parent lot, be paved, and meet emergency service access requirements.

6. **Lot Coverage** – There is no maximum lot coverage for the unit lots, maximum lot coverage applies to the parent lot. The maximum lot coverage is 50%.
7. **Vegetative Coverage** – There is a minimum vegetative cover requirement for the parent lot. In the D18 zoning district, 30% vegetative cover is required.
    a. Shared open space is not required for an ARS in the D18 zoning district.
8. **Density** – Site measures 79,189 square feet (1.8 acres). At 18 units per acre, the site could accommodate up to 32 dwelling units.
    a. **Density bonuses** – The commission may award a density bonus to an ARS for enhancements to the development. For the D18 zoning district, the total bonus shall not exceed 25%. Applicant should state in the project narrative if they are requesting density bonuses and how they meet the enhancement criteria.
9. **Lighting** – In the project narrative, the applicant should discuss if lighting will be installed.
10. **Noise** – Noise is not expected to be out of character with the D18 residential zoning district.
11. **Flood** – NA
12. **Hazard/Mass Wasting/Avalanche/Hillside Endorsement** – No Known
13. **Wetlands** – No Known
14. **Habitat** – (Eagle – remind applicant to check with Feds; Riparian, etc.) – No Known
15. **Plat or Covenant Restrictions** – No known
16. **Traffic** – Per CBJ 49.40.300 a traffic impact analysis is required for projects that are anticipated to generate more than 500 average daily trips (ADTs). A single-family dwelling generates 9.52 ADTs. The proposal of 14 lots for single-family dwellings would generate 133.28 ADTs. A TIA will not likely be required for this project.
17. **Homeowners Association** – The ARS requires that a HOA be formed. The HOA documents must be recorded with the final plat.

Building Division

18. **Building** - plans will be addressed in plan review
19. **Outstanding Permits** -

	Permit Application	Pstatus	Permit Type	Location	Permit Id	Purpose
1	BLD20130336	Issued	BMH	4090 DELTA DR	2000993	Place 10 manufactured homes on existing foundations

General Engineering/Public Works

20. **Engineering** –
    a. **Easements:** Site plan shall include all easements for drainage, utility lines including plumbing lines, access, snow storage, trash (dumpster) storage, or any other shared use that requires crossing the property line.
    b. **Agreements:** A maintenance and hold harmless (of CBJ) agreement will need to be drafted, signed, and recorded for all shared infrastructure for the development, e.g. driveway, water, sewer, etc.

21. **Drainage** – Submit a drainage plan indicating how drainage from the proposed subdivision will join an established drainage channel or channels. Easements must be provided on the plat for all established drainage ways or any proposed drainage ways that cross any current or future abutting property lines.

22. **Utilities** – (water, power, sewer, etc.) A master water meter shall be installed by the developer prior to any branches or services. The meter must be in an above ground heated space. Water and sewer sizing shall be determined by an Alaskan licensed civil or mechanical engineer.

    Beyond the shared private main and master water meter, a minimum of 1" water service and 4" sewer service will need to be installed to the front property line of each newly created lot prior to the recording of the final plat. At the time of preliminary plat submittal, please submit a construction plan with for the new utilities. The plan needs to include pipe locations, sizing, and grades for sewer to indicate appropriate fall will be achieved. Existing water services not being utilized shall be decommissioned and removed back to the mainline. If utilizing existing services or branches please show their location, size, and material type on the plan.

    If a new private water and/or sewer mains are to be installed within the ROW, the following permits will need to be obtained to provide utilities to the newly created lot:

    a. **CBJ right-of-way (ROW) permit**- Once the construction plan for the utilities is approved, CBJ will create the ROW permit. The permit will allow the tapping of the water and sewer mains, water and sewer service installation, and road restoration within the right-of-way. Inspection fees, refundable bond amount, and conditions will be determined after review of the proposed construction plan. The extension of the utilities within the property will require further permitting and fee assessments. This process is done separately from the subdivision and typically in conjunction with the building permit application.

    b. **CBJ Water and Sewer Utility permits** – The installation of the private water and sewer main lines, services, and the water meter within the private property will be covered by these utility permits.

Fire Marshal

23. **Fire Items/Access** –

List of required applications

Based upon the information submitted for pre-application review, the following list of applications must be submitted in order for the project to receive a thorough and speedy review.

1. ARS Preliminary Plan Approval Application
2. Major Subdivision Application (Required when the subdivision plat is submitted)
3. Development Permit Application

Additional Submittal Requirements

Submittal of additional information, given the specifics of the development proposal and site, are listed below. These items will be required in order for the application to be determined Counter Complete.

1. A copy of this pre-application conference report.

2. Preliminary Plat Checklist (Required when the subdivision plat is submitted)
3. Please see 49.15.940(b) for a description of the Required submissions with an ARS Preliminary Plan Approval:
    a. Ownership
    b. Preliminary Development Plan
    c. Design
    d. Open space, common facilities, and general landscaping
    e. Request for density bonuses (if applicable)
    f. Description of phased development (if applicable)
4. As built survey of existing foundations if you plan to utilize them.

Fee Estimates

The preliminary plan review fees listed below can be found in the CBJ code section 49.85.

Based upon the project plan submitted for pre-application review, staff has attempted to provide an accurate estimate for the permits and permit fees which will be triggered by your proposal.

1. ARS Review Fee
    a. Preliminary Plan – $400.00 plus $80.00 per residential unit
    b. Final Plan - $300.00 plus $60.00 per residential unit
    c. Public notice sign fee $50 plus $100 refundable deposit
2. Major Subdivision Review Fee
    a. Preliminary Plat - $110 per lot
    b. Final Plat - $70 per lot
    c. Public notice sign fee $50 plus $100 refundable deposit
3. ROW Permit (work within the ROW):
    a. $10 permit fee
    b. Inspection fees - $60 per inspection trip or hour, will be determined at time of construction plan review
    c. Refundable bond – will be determined at time of construction plan review. Can be paid in the form of cash, check, surety, or conveyance.
    d. Bond fee – dependent on type of bond payment.
1. Water Utility Permit (work within private property):
    a. Water Connection charge – based on the line size at the location of the water meter as determined by an Alaskan licensed civil engineer.
2. Sewer Utility Permit (work within private property):
    a. Sewer Connection charge – based on the number of drainage fixture units and shall be supplied in the civil construction plans as determined by an Alaskan licensed civil engineer.

b. $60.00 per inspection or trip, will be determined at time of construction plan review.

For informational handouts with submittal requirements for development applications, please visit our website at www.juneau.org/cdd.

Submit your Completed Application
You must submit your application(s) in person with payment made to:

City & Borough of Juneau, Permit Center
230 South Franklin Street
Fourth Floor Marine View Center
Juneau, AK 99801

Phone: (907) 586-0715
Fax: (907) 586-4529
Web: www.juneau.org/cdd

PRELIMINARY PLAT CHECK LIST

Name of Proposed Subdivision: Delta Drive Subdivision

The following items must be included with the initial submittal of a Preliminary Plat:

- ☒ Application, filled out completely
- ☐ Application fee (see fee schedule)
- ☒ Project Narrative
- ☐ Five (5) – 24" by 36" Copies
- ☒ Pre-application Conference Report
- ☒ Lot Closure Report
- ☒ Disclosure of all known environmental hazards and any proposed mitigation measures recommended in the applicable environmental document.
- ☐ Preliminary Plat Checklist: I have reviewed the checklist and all submittals for completeness and accuracy.

_____ _____

Applicant or Surveyor - Signature Date

_____

Applicant or Surveyor - Print Name

GENERAL REQUIREMENTS

- ☐ The preliminary plat shall be prepared by a professional land surveyor, registered in the State of Alaska
- ☐ The preliminary plat shall be submitted on 22 by 34 inch sheets. The director of engineering and public works may approve alternate sheet sizes
- ☐ The preliminary plat shall be drawn with black ink to a scale of one-inch to 100 feet or less, or other suitable scale approved by the director of engineering and public works
- ☐ The preliminary plat shall be oriented with north toward the top of the sheet.
- ☐ A vicinity map shall be located in the upper right-hand corner of the sheet
- ☐ The vicinity map shall be oriented in the same direction as the plat
- ☐ A suitable north arrow shall be shown for the plat and vicinity map
- ☐ All line work and lettering must be of professional quality, and all line widths and lettering sizes must be of such size that all information can be clearly shown without overlap or confusion

GRAPHIC REQUIREMENTS - A preliminary plat shall contain the following information:

Title block - An enclosed title block in the lower right-hand corner containing the following information:

- ☐ The proposed name of the subdivision
- ☐ The legal description of the parcel to be subdivided including U.S. Survey, U.S. Mineral Survey, A.T.S. number or section, township, and range number, as applicable
- ☐ "City and Borough of Juneau, Alaska"
- ☐ "State Recorder's Office at Juneau"
- ☐ The date the preliminary plat was prepared and revised
- ☐ The horizontal scale
- ☐ The name and address of the owner of record
- ☐ The name, address, and telephone number of the surveyor preparing the preliminary plat

Preliminary Plat Checklist
Updated 1/2018
Page 2 of 5

Lot, block, and street information:

- ☑ The area of each lot
- ☑ The dimensions in feet and hundredths of a foot
- ☑ An identifying number and letter for lots and blocks
- ☑ Lots numbered consecutively, commencing with the number "1," with no omissions or duplications
- ☑ If the remainder of an original parcel being subdivided is relatively large, it shall be designated as a "tract" with an identifying number
- ☑ All parcels of land intended to be dedicated for public use or reserved for the use of all of the property owners in the proposed subdivision shall be shown as lots, and consecutively numbered. The purpose and any conditions or limitations on the use of the parcel shall be noted on the plat
- ☑ Abutting properties shall be shown with dashed lines, numbers, and/or letters
- ☑ For resubdivisions or public way vacations, the lines and legal description of the previous lots shall be shown with light dashed lines, numbers, and/or letters, or by a separate plat on the same sheet showing the previous lot lines
- ☑ The minimum data shown for each curve shall be as follows:
  - ☑ Length
  - ☑ Central angle
  - ☑ Radius
  - ☑ Bearing and distance of long chord
- ☐ Setbacks shall be shown on all corner lots and any lots with multiple frontage. Setbacks shall be shown on typical lots

Boundary lines:

- ☑ All boundary lines of the subdivision with bearings and distances described
- ☑ All retraced boundary lines shall show record and measured bearings and distances where they differ. Record dimension information shall be shown within parentheses and include a record source identification
- ☑ The exterior boundary lines of the subdivision shall be a solid black opaque line that is of a width that distinguishes it from all other property lines shown on the plat
- ☐ If phasing is proposed, then the boundaries and number of each phase, sequential lot numbering, and a subdivision name consistent with previous phases shall be shown

Monumentation:

- ☑ The monuments used to establish the basis of bearing
- ☑ Each monument found or set shall be identified on the plat by a symbol
- ☑ A complete description of the monument, including type and all information printed on the cap. A typical drawing shall be shown for each type of monument cap set
- ☑ A legend showing the symbols for all the types of monuments
- ☑ The identification, description location, elevation, and datum of the benchmark used to establish vertical control

Site access, circulation, and utilities:

- ☑ The widths and names of existing rights-of-way within the subdivision and within 100 feet of the subdivision boundary
- ☐ Proposed rights-of-way, including their widths and proposed names
- ☐ The grades of existing and proposed streets within these rights-of-way
- ☐ The width, ownership, use, and record reference of all proposed and existing easements within the subdivision and within 100 feet of the subdivision boundary
- ☐ The width, ownership, and use of all proposed easements

- ☒ All proposed and existing easements shall have sufficient dimensions shown to determine their location on the ground
- ☐ Existing trails or pathways within the subdivision and within 100 feet of the subdivision boundary, including the width of any associated rights-of way or easements
- ☐ Proposed trails or pathways and widths of their rights-of-way
- ☐ If the plat submitted covers only a part of the tract under the control of the applicant, a sketch plat of the prospective street system of the unplatted part shall be submitted
- ☒ The location of any existing or proposed driveways/curb cuts that access or are proposed to access any existing or proposed street

Topographic information:

- ☒ For slopes of less than five percent, show one foot contour lines and include spot elevations at all breaks in grade, along all drainage channels or swales, and at selected points not more than 100 feet apart in all directions
- ☐ For slopes between five percent and ten percent, show two foot contour lines
- ☐ For slopes greater than ten percent, show five foot contour lines
- ☒ Every fifth elevation contour shall be distinctive and clearly labeled
- ☒ Dashed lines shall represent existing contours
- ☒ Mapping shall include any significant features which can materially affect the design of the subdivision, including, but not limited to, structures, fences, walls, and utility poles
- ☒ If irregular slopes or special features are present, additional contour information may be required by the director of engineering and public works for planning or construction purposes. Additional required information may include projecting the topography of the site after grading has taken place, showing such items as:
  - ☐ Pad elevations and drainage patterns for each lot
  - ☐ Tops and toes of all manufactured slopes, including daylight lines
  - ☐ Existing and proposed retaining wall locations and heights
- ☐ For subdivisions located in hillside areas with slopes greater than eighteen percent, additional requirements apply in accordance with CBJ 49.70, Article II

Sewer and water:

- ☑ Existing sewer and water mains within the tract with pipe sizes and grades
- ☑ A draft plan for proposed water and sewer lines showing the size, approximate slope, and connection points with elevations for the purpose of determining the feasibility of construction

Multisheet plats:

- ☐ When a plat requires more than one sheet, exclusive of a certificate sheet, an index sheet shall be included. When a plat requires more than three sheets, a cover sheet shall also be included, showing the subdivision title, a key map, and all certificates. Each additional sheet shall include the following data:
  - ☐ North arrow
  - ☐ Legend
  - ☐ Surveyor's seal and signature
  - ☐ Title block
  - ☐ Sheet _____ of _____
  - ☐ Scale
  - ☐ All plat notes
  - ☐ Vicinity map

N/A

ADDITIONAL MAPPING OR REPORTS- *At the pre-application meeting, it will be determined if any of the following additional mapping or reports are required to be submitted with the preliminary plat. If required, the following additional mapping or reports shall be submitted:*

Hazard and Special Habitat Areas:

- ☐ Any portion of a special flood hazard area, landslide or avalanche area, habitat area as defined by CBJ 49.70.310, or watersheds, either existing at the proposed subdivision site or shown on the overlay maps, adopted pursuant to this title, to exist at the proposed subdivision site, must be depicted on the preliminary plat
- ☐ The boundaries of any wetland areas must be depicted on the preliminary plat. Boundaries must be determined by a person qualified to perform wetland delineations N/A

Soils report:

- ☐ A soils report prepared by an engineer licensed by the State of Alaska shall be required if the proposed subdivision is located farther from the existing public sewer system than specified in CBJ 49.35, and the applicant chooses to provide on-lot waste disposal rather than to connect to the public system. A soils report shall include the following:
  - ☐ Certification that the proposed lots are large enough and have soil of sufficient permeability to permit the construction of approved waste treatment systems for on-lot waste disposal
  - N/A ☐ The location and size of drain fields for each lot
  - ☐ The locations and logs of test borings, percolation test results, and a hydrological evaluation of on-site sewage disposal
  - ☐ If the soils report indicates that the soils found on the site are not of sufficient permeability or the lots are not large enough to permit the construction of systems for on-lot waste disposal, the size of the proposed lots must be increased or alternate methods for waste disposal proposed
  - ☐ The soils report shall describe the nature of the subsurface soils and any soil conditions that would affect the design of the proposed development. The soils report shall state whether the proposed subdivision plan is feasible and provide general solutions for all known geotechnical conditions or problems

Drainage report:

- ☐ A preliminary report specifying the method by which the applicant proposes to manage surface and subsurface drainage for the subdivision and the effect of such method on adjacent areas. Unlike the drainage plan required by CBJ 49.35.510, the preliminary drainage report does not need to be prepared by a licensed engineer. The report must address the following:
  - ☐ A calculation of the increase in stormwater runoff resulting from the proposed development as well as the runoff from all drainage areas associated with the site. Runoff calculations shall be based on a fully-developed subdivision and a 25-year storm event
  - ☐ How drainage from the proposed subdivision will join an established drainage channel or channels, unless the director of engineering and public works approves use of an alternative drainage way
  - ☐ An evaluation of existing drainage ways and structures located between the subdivision and the receiving water body, and verification that the existing drainage ways can accommodate the increased runoff. If the increased runoff cannot be handled, the plan must propose solutions to the problem
  - ☐ All required improvements, on or off site, that are shown on the construction plans in accordance with CBJ 49.35, Article V, and that will be constructed as part of the subdivision

Water:

- ☐ For subdivisions of five or more lots, including major subdivisions, the following shall be included, where applicable, in accordance with CBJ 49.15.412:
  - ☐ If a proposed subdivision is located at greater distance from the existing public water system than specified in CBJ 49.35, Article III, and the applicant chooses not to connect to the public system, a statement that the applicant will provide a community water system or that individual wells will be used

- ☐ A report by a registered engineer or geologist that clearly supports the legal and physical availability of adequate water. Methods for proof of water availability and the standards for quantity are listed in CBJ 49.35, Article III
- ☐ A copy of the State application for a permit to appropriate water in the quantity required to meet the subdivisions demands

☐ This does not apply to remote subdivisions unless: the subdivider of the remote subdivision chooses to provide potable water, a public water system is available and the subdivision falls within the criteria outlined in CBJ 49.35.310(a), or the subdivision has four or fewer lots.

☐ The director for minor subdivisions, and the planning commission for major subdivisions, may, for good cause, temporarily waive the requirement to provide a water report and proof of water, and condition the approval of the preliminary plat upon the provision of both documents as part of the final plat application and approval process.

Erosion control:

☐ A report explaining the method by which the applicant proposes to control erosion and manage runoff, and potential impacts to adjacent properties or water bodies. The report shall include a plan for preservation of ground cover in areas where runoff and resulting erosion need to be minimized.

Traffic study:

☐ A traffic impact analysis may be required with the preliminary plat in accordance with CBJ 49.40.300.

Shadow plats:

N/A ☐ For subdivisions of five or more lots in transition areas, a shadow plat shall be submitted according to CBJ 49.70.710. The shadow plat shall consist of a sketch superimposed on the proposed subdivision layout. This sketch shall reflect any future resubdivision of the parcels into smaller lots consistent with the higher density and the lot size allowed under the transition zoning.

GENERAL NOTES

1. ALL BEARINGS SHOWN ARE TRUE BEARINGS AS ORIENTED TO THE BASIS OF BEARING AND DISTANCES SHOWN ARE REDUCED TO HORIZONTAL FIELD DISTANCES.
2. THE ERROR OF CLOSURE OF THIS SURVEY DOES NOT EXCEED 1:10,000.
3. BASIS OF BEARING
   THE BASIS OF BEARING FOR THIS PLAT IS THE BEARING OF S 0° 01' 00" W, AS SHOWN ON PLAT No. 73-17, DATED OCTOBER 29, 1973, BETWEEN THE RECOVERED MONUMENTS, AS SHOWN ON THIS PLAT.
4. WHERE RECORD SURVEY COURSES (BEARINGS AND/OR DISTANCES) DIFFER FROM THAT OF ACTUAL FIELD MEASURED AND/OR COMPUTED SURVEY COURSES, THE RECORD BEARING AND/OR DISTANCES IS SHOWN WITHIN PARENTHESIS AND REFERENCED TO A RECORDED PLAT (R#).
5. THE PRELIMINARY FIELD SURVEYING WAS PERFORMED ON MAY 26-27, 2020, UTILIZING A TRIMBLE S7 ROBOTICS TOTAL STATION WITH STANDARD LASER RANGING MEASUREMENTS.
6. RECORD INFORMATION
   THE RECORD INFORMATION USED FOR THIS SUBDIVISION IS DERIVED FROM THE OFFICIAL PLATS: PLAT No. 73-17, JUNEAU RECORDING DISTRICT, DATED OCTOBER 29, 1973 (R1), PLAT No. 92-18, JUNEAU RECORDING DISTRICT, DATED APRIL 28,1992 (R2);
7. ALL DISTANCES ARE MEASURED IN U.S. SURVEY FEET, AND HAVE BEEN REDUCED TO THEIR HORIZONTAL EQUIVALENTS.
8. DOMESTIC WATER AND SANITARY SEWER DISPOSAL PROVIDED BY THE CITY AND BOROUGH OF JUNEAU PUBLIC UTILITIES.
9. THE LOTS CREATED THROUGH THIS SUBDIVISION ARE AN ALTERNATIVE RESIDENTIAL SUBDIVISION. AT TIME OF PLAT RECORDING DEVELOPMENT OF LOTS, INCLUDING FURTHER SUBDIVISION OR USE, IS SUBJECT TO CBJ 49.15 ARTICLE IX. SEE CITY AND BOROUGH OF JUNEAU LAND USE CODE FOR CURRENT REGULATIONS.
10. THERE SHALL BE NO DISTURBANCE OR DEVELOPMENT WITHIN THE PERIMETER BUFFER SHOWN ON THIS PLAT, AS REQUIRED BY CBJ 49.15.920(j).
11. AT TIME OF RECORDING, LOTS 2 THROUGH 11 AND 13 THROUGH 15 ARE LIMITED TO ONE SINGLE FAMILY DWELLING. LOT 12 MAY BE PERMITTED ONE SINGLE FAMILY DWELLING AND ONE ACCESSORY APARTMENT. SEE CBJ 49.15 ARTICLE IX FOR CURRENT REGULATIONS.

EASEMENT NOTE

A BLANKET EASEMENT ACROSS LOT 1 FOR UTILITIES, DRAINAGE AND DRIVEWAY ACCESS IS DEDICATED BY THIS PLAT.

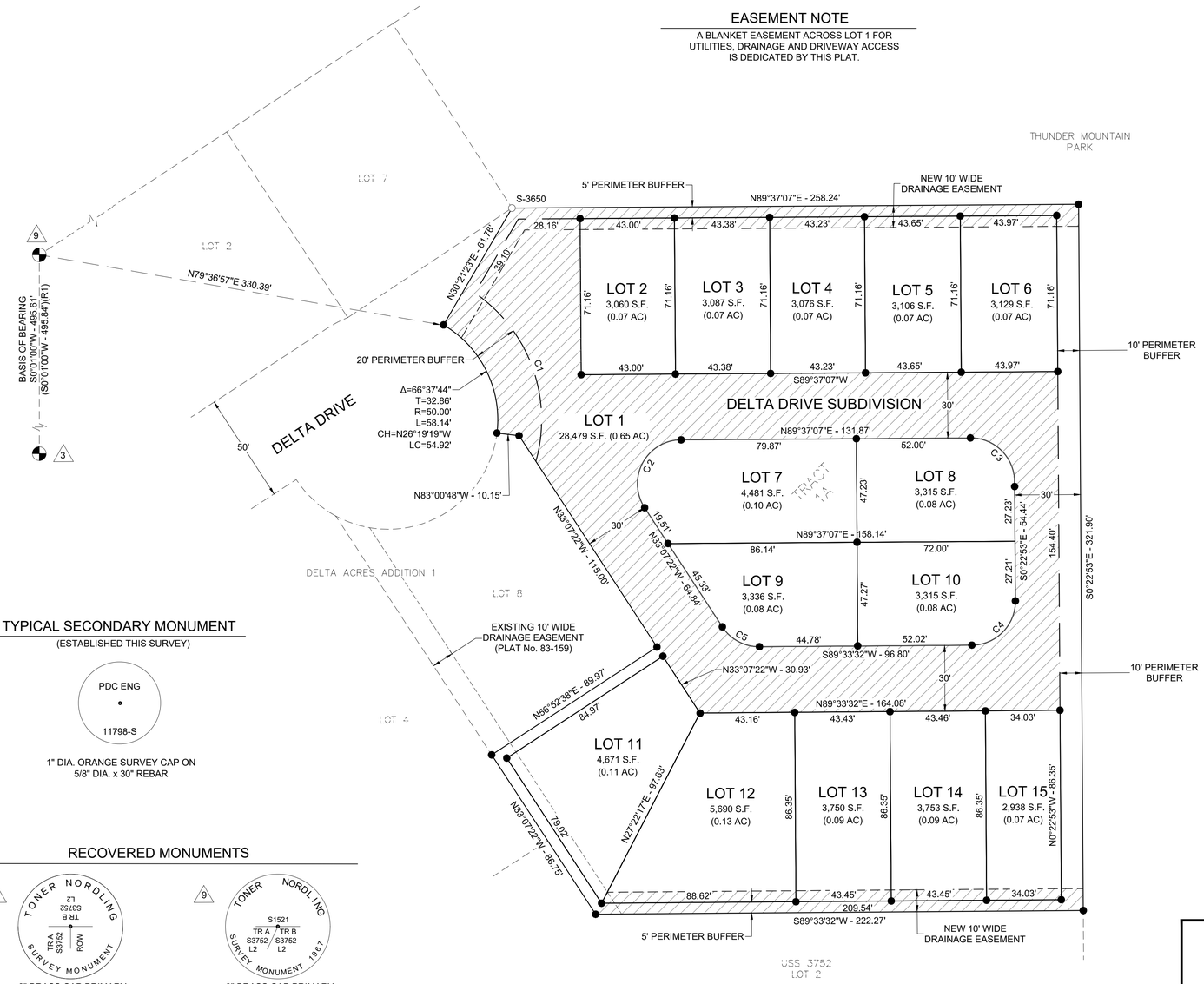

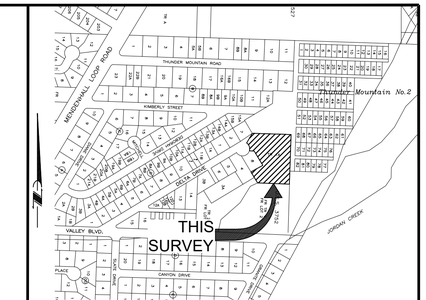

VICINITY MAP

SOURCE: CBJ PROPERTY ATLAS

SCALE: 1"= 500'

LEGEND

- PRIMARY MONUMENT (RECOVERED)
- SECONDARY MONUMENT (RECOVERED)
- SECONDARY MONUMENT (ESTABLISHED)
- SURVEYED LINE
- UNSURVEYED LINE
- EASEMENT LINE
- NEW EASEMENT LINE
- (R1) PLAT No. 73-17, JRD
- (R2) PLAT No. 92-18, JRD
- ACCESS, UTILITY & DRAINAGE EASEMENT
- PERIMETER BUFFER

OWNERSHIP CERTIFICATE

BICKNELL, INC. HEREBY CERTIFIES THAT BICKNELL, INC. IS THE OWNER OF THE PROPERTY SHOWN AND DESCRIBED HEREON AND THAT IT HEREBY ADOPTS THIS PLAT OF SUBDIVISION WITH ITS FREE CONSENT, AND DEDICATE ALL STREETS, ALLEYS, WALKS, PARKS AND OTHER OPEN SPACES TO PUBLIC OR PRIVATE USE AS NOTED:

OWNER _____ DATE: _____ 2020
ROSCOE V. BICKNELL, IV
BICKNELL, INC.

NOTARY ACKNOWLEDGMENT

UNITED STATES OF AMERICA)
) SS
STATE OF ALASKA)

THIS IS TO CERTIFY THAT ON THIS_____ DAY OF _____, 2020, BEFORE ME, THE UNDERSIGNED A NOTARY PUBLIC IN AND FOR THE STATE OF ALASKA, DULY COMMISSIONED AND SWORN, PERSONALLY APPEARED _____ TO ME KNOWN TO BE THE PERSONS DESCRIBED IN AND WHO EXECUTED THE ABOVE AND FOREGOING INSTRUMENT, AND ACKNOWLEDGED TO ME THAT THEY SIGNED AND SEALED THE SAME FREELY AND VOLUNTARILY FOR THE USES AND PURPOSES THEREIN MENTIONED.
WITNESS MY HAND AND OFFICIAL SEAL THE DAY AND YEAR IN THIS CERTIFICATE FIRST ABOVE WRITTEN.

_____
NOTARY PUBLIC FOR ALASKA

MY COMMISSION EXPIRES: _____

PLANNING COMMISSION PLAT APPROVAL

I HEREBY CERTIFY THAT THE SUBDIVISION PLAT SHOWN HEREON HAS BEEN FOUND TO COMPLY WITH THE SUBDIVISION REGULATIONS OF THE CITY AND BOROUGH OF JUNEAU, ALASKA AND THAT SAID PLAT HAS BEEN APPROVED BY THE PLANNING COMMISSION BY PLAT RESOLUTION NO. _____, DATED _____, 2020 , AND THAT THE PLAT SHOWN HEREON HAS BEEN APPROVED FOR RECORDING IN THE JUNEAU RECORDING DISTRICT, STATE RECORDERS OFFICE AT ANCHORAGE.

_____
CHAIRMAN OF THE PLANNING COMMISSION
CITY AND BOROUGH OF JUNEAU

DATED _____, 2020

ATTEST:

_____
MUNICIPAL CLERK
CITY AND BOROUGH OF JUNEAU

TYPICAL SECONDARY MONUMENT

(ESTABLISHED THIS SURVEY)

1" DIA. ORANGE SURVEY CAP ON 5/8" DIA. x 30" REBAR

RECOVERED MONUMENTS

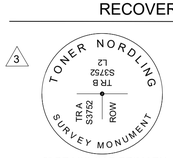

3" BRASS CAP PRIMARY
GOOD CONDITION
1.5' BELOW GRADE

3" BRASS CAP PRIMARY
GOOD CONDITION
FLUSH WITH GRADE

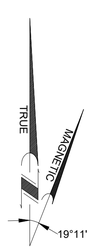

SOURCE: N.O.A.A.
MAGNETIC DECLINATION 19°11'E
NOVEMBER 14, 2017 CHANGING BY
0°17' W/YEAR

CURVE TABLE					
CURVE #	LENGTH	DELTA	RADIUS	CHORD BEARING	CORD DISTANCE
C1	87.15'	71° 20' 01"	70.00'	N19° 52' 32"W	81.63'
C2	42.84'	122° 44' 29"	20.00'	S28° 14' 53"W	35.11'
C3	31.42'	90° 00' 00"	20.00'	N45° 22' 53"W	28.28'
C4	31.40'	89° 56' 25"	20.00'	N44° 35' 20"E	28.27'
C5	20.01'	57° 19' 06"	20.00'	S61° 46' 55"E	19.18'

30' 0 15' 30' 60'
SCALE: 1"=30'

SURVEYOR'S CERTIFICATE

I, CRAIG O. RANSON, IN MY CAPACITY AS A PROFESSIONAL LAND SURVEYOR REGISTERED IN THE STATE OF ALASKA, CERTIFY THAT THIS PLAT REPRESENTS THE SURVEY MADE BY ME OR UNDER MY DIRECT SUPERVISION, THAT THE ACCURACY OF THE SURVEY IS WITHIN THE LIMITS REQUIRED BY TITLE 49 OF THE CODE OF THE CITY AND BOROUGH OF JUNEAU, THAT ALL DIMENSIONS AND RELATIVE BEARINGS ARE CORRECT AND THAT MONUMENTS ARE SET IN PLACE AND NOTED UPON THIS PLAT AS PRESENTED.

DATE: 12/04/20

STATE OF ALASKA 49TH
CRAIG O. RANSON
LS 11798
REGISTERED PROFESSIONAL LAND SURVEYOR

PDC ENGINEERS
PLAN • DESIGN • CONSTRUCT
A RESPEC COMPANY
9109 Mendenhall Mall Rd. Ste. 4, Juneau, AK 99801
907.780.6060 | AECC605

A PLAT OF
DELTA DRIVE SUBDIVISION
A SUBDIVISION OF
THUNDER MOUNTAIN PARK TRACT 1A
WITHIN U.S. SURVEY NO. 3752
WITHIN CITY AND BOROUGH OF JUNEAU, ALASKA
JUNEAU RECORDING DISTRICT

STATE RECORDER'S OFFICE AT ANCHORAGE

OWNER:
BICKNELL, INC.
P.O. BOX 33517
JUNEAU, AK 99803

SURVEYOR:
PDC ENGINEERS
9109 MENDENHALL MALL ROAD SUITE 4
JUNEAU, ALASKA 99801
(907) 780-6060

DATE: December 04,2020 SCALE: 1"=30' SHEET 1 OF 1 PDC PROJ. No. 20098JN

SMP20200004/ARP20200001

P:\2020\20098JN-Bicknell_Delta\LV100\Plat\20098JN_PLAT Dec 04, 2020 - 10:05 AM

DELTA DRIVE SUBDIVISION CONSTRUCTION IMPROVEMENT PLAN

JUNEAU, ALASKA

SHEET INDEX

SHEET No.	DESCRIPTION
C001	COVER SHEET
C002	GENERAL NOTES, ABBREVIATIONS AND SYMBOLS
C003	SUMMARY TABLES
C004	EXISTING SITE CONDITIONS
C100	TYPICAL SECTIONS
C101	CONSTRUCTION DETAILS
C102	CONSTRUCTION DETAILS
C200	OVERALL SITE PLAN
C201	SITE & UTILITY PLAN
C202	SITE & UTILITY PLAN
C203	GRADING PLAN
C204	WATER METER ENCLOSURE DETAILS
C205	WATER METER ENCLOSURE DETAILS
C206	WATER METER ENCLOSURE DETAILS
C207	WATER METER ENCLOSURE DETAILS
C300	EROSION & SEDIMENT CONTROL PLAN
C301	EROSION & SEDIMENT CONTROL DETAILS

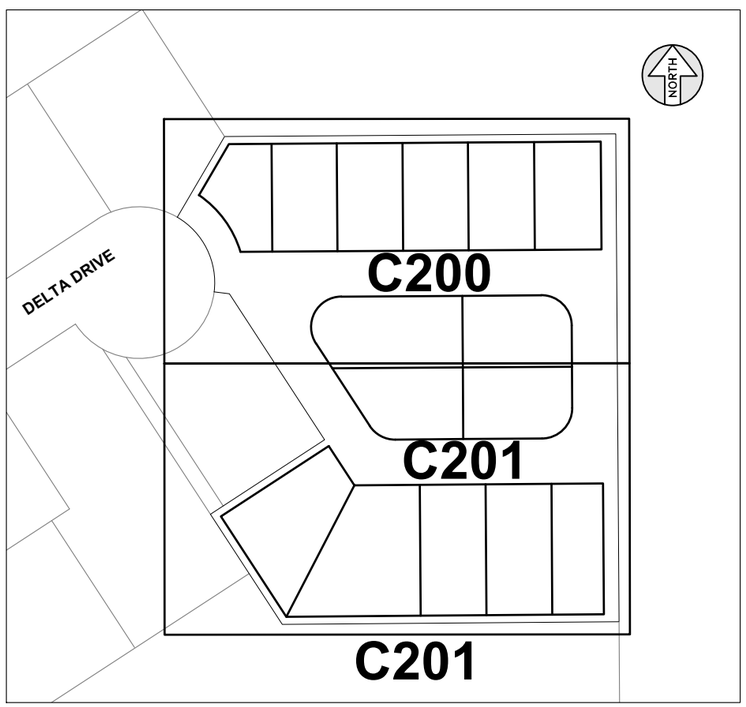

SHEET KEY MAP

N.T.S.

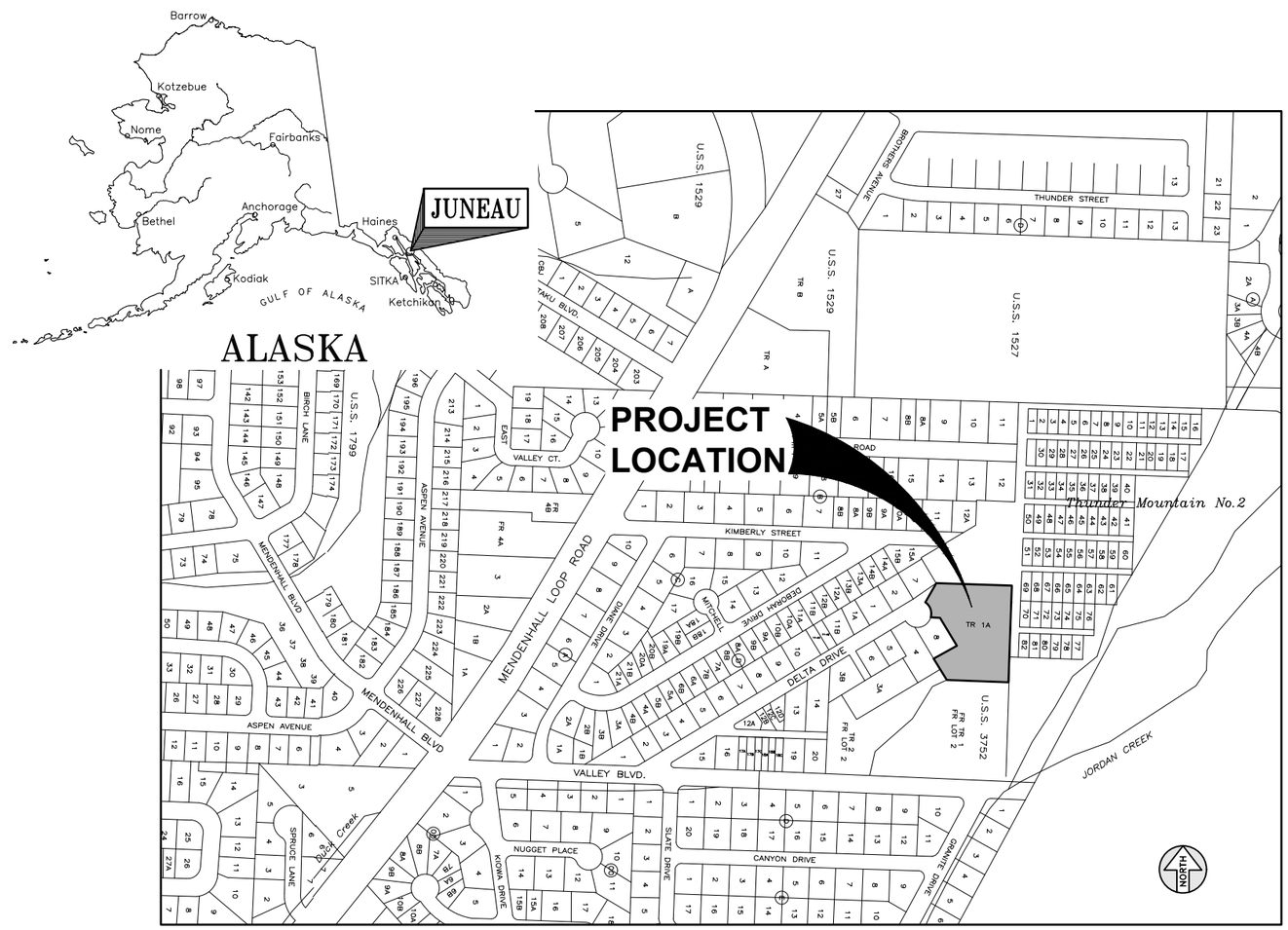

PROJECT LOCATION MAP

500' 0 250' 500' 1000'

SCALE: 1"=500'

DESIGN MSM				
DRAWN MSM				
CHECK JMP				
APPROVED JMP				
FILE:	No.	DATE	REVISION	BY / APRVD.

DELTA DRIVE SUBDIVISION

JUNEAU, AK

BICKNELL INC. QUALITY CONSTRUCTION

STATE OF ALASKA 49TH Joseph M. Pusich CE 8152 REGISTERED PROFESSIONAL ENGINEER 12/03/20

PDC ENGINEERS
PLAN • DESIGN • CONSTRUCT
A BESPEC COMPANY
9101 Mendenhall Mall Rd., Juneau, AK 99801
907.780.6060 | AECC605

COVER SHEET

DATE: Dec 03, 2020
PDC No. 20098JN

SHEET C001

P:\2020\20098JN-Bicknell_Delta\C\C0001cnst20098JN.dwg PLOT: December 03, 2020 at: 3:58pm Micki.Minsch

GENERAL CONSTRUCTION NOTES

1. CBJ ENGINEERING STANDARD DETAILS BOOK FOR CIVIL ENGINEERING PROJECTS AND SUBDIVISION IMPROVEMENTS DATED AUGUST, 2011 AND CBJ ENGINEERING STANDARD SPECIFICATIONS DATED DECEMBER, 2003 ARE MADE A PART OF THIS CONTRACT, WITH CURRENT REVISIONS AS APPLICABLE.
2. LARGE BOULDERS, HARDPAN, STUMPS, LOGS, ORGANICS AND GROUND WATER MAY BE ENCOUNTERED AT VARIOUS DEPTHS DURING EXCAVATION OPERATIONS. THESE MATERIALS SHALL BE DISPOSED OF AS REQUIRED BY THE ENGINEER.
3. GRADES AND ALIGNMENTS SHOWN ON THESE PLANS ARE SUBJECT TO MINOR REVISIONS AS APPROVED BY THE ENGINEER.
4. LOCATION OF WATER SYSTEM IMPROVEMENTS, SANITARY SEWER MANHOLES, STORM DRAIN STRUCTURES, PIPING AND PIPE LENGTHS ARE SUBJECT TO MINOR REVISIONS AS APPROVED BY THE ENGINEER.
5. LOCATIONS OF EXISTING UNDERGROUND SEWER, WATER, TELEPHONE, CABLE TELEVISION, AND POWER UTILITIES SHOWN ON THESE PLANS WERE DERIVED FROM CBJ AS-BUILTS OR FIELD LOCATES. ACTUAL LOCATIONS MAY VARY FROM THOSE SHOWN. THE CONTRACTOR IS RESPONSIBLE FOR LOCATING, PROTECTING AND MAINTAINING THE UTILITIES THROUGHOUT THE CONSTRUCTION OF THIS PROJECT. ANY DAMAGE RESULTING TO THESE UNDERGROUND UTILITIES DURING CONSTRUCTION SHALL BE PAID FOR BY THE CONTRACTOR AND SHALL BE CONSIDERED INCIDENTAL TO THE CONTRACT. CALL "DIAL BEFORE YOU DIG" @ 586-1333 FOR UNDERGROUND UTILITY LOCATES AND 811 ALASKA DIG LINE FOR ACS AND GCI PRIOR TO ANY EXCAVATION ACTIVITIES.
6. CONTRACTOR SHALL ASSURE GARBAGE PICKUP, DAILY MAIL SERVICE, FUEL AND SERVICE DELIVERIES WILL BE UNINTERRUPTED TO ALL RESIDENTS AFFECTED BY THIS PROJECT.
7. PROPERTY LINE LOCATIONS USED IN THESE PLANS WERE DERIVED FROM RECORD PLATS AND DO NOT REPRESENT A SUBDIVISION BOUNDARY SURVEY.
8. ALL SIGN INSTALLATIONS OR RELOCATIONS SHALL BE PERFORMED ACCORDING TO THE "MANUAL ON UNIFORM TRAFFIC CONTROL DEVICES" (M.U.T.C.D.) WITH THE ALASKA SUPPLEMENT.
9. ALL ITEMS DESIGNATED TO BE REMOVED SHALL BE DISPOSED OF AT AN APPROVED DISPOSAL SITE, EXCEPT AS NOTED IN THE CONTRACT DOCUMENTS.
10. PROVIDE KNOCKOUTS IN PRECAST STORM DRAIN STRUCTURES FOR ALL PIPES SHOWN ON THE PLANS.
10. ONLY HORIZONTAL ELBOW FITTINGS (BENDS) ARE SHOWN ON THE PLANS. ADDITIONAL FITTINGS WILL BE REQUIRED FOR VERTICAL DEFLECTIONS NEAR CONNECTION TO EXISTING PIPES, AND AT OTHER LOCATIONS REQUIRING GRADE CHANGES TO AVOID CONFLICTS.
11. THE CONTRACTOR SHALL NOT STORE MATERIALS OR EQUIPMENT OR OPERATE EQUIPMENT WITH ITS TRACKS OR WHEELS PLACED ON PRIVATE PROPERTY WITHOUT THE WRITTEN APPROVAL OF THE PROPERTY OWNER.
11. THE CONTRACTOR SHALL NOTIFY CBJ WATER UTILITIES OPERATOR LONI VANKIRK (723-4975) OF PROPOSED WATER SERVICE INTERRUPTION AND SUBMIT THE "WATER SYSTEM SPECIAL USE PERMIT" (COSIGNED BY THE ENGINEER) AT LEAST 48-HOURS PRIOR TO SHUTDOWN OR FLUSHING OF MAINLINE WATER PIPE. NO WATER SERVICE INTERRUPTION MAY PROCEED UNTIL THIS APPROVAL IS OBTAINED.
12. CONTRACTOR SHALL REFERENCE ALL EXISTING PROPERTY CORNER MONUMENTS (I.E. BRASS CAP MONUMENTS, REBARS OR CHISELED X'S) PRIOR TO CONSTRUCTION THAT WILL BE DISTURBED DURING HIS WORK, AND REMONUMENT AFTER CONSTRUCTION OPERATIONS. ALL WORK SHALL BE DONE BY, OR UNDER THE DIRECTION OF, AN ALASKA REGISTERED LAND SURVEYOR. ALL EXISTING PROPERTY CORNERS ARE NOT NECESSARILY SHOWN ON THE PLANS.
13. THE PLAN DRAWINGS DO NOT NECESSARILY SHOW ALL TREES AND SHRUBS THAT MAY BE ENCOUNTERED DURING CONSTRUCTION ACTIVITIES. NO TREES, SHRUBS OR LANDSCAPING ARE TO BE REMOVED OR DAMAGED, UNLESS SHOWN ON THE DRAWINGS OR DIRECTED BY THE ENGINEER.
14. "JUMPING JACK", OR SIMILAR TYPE COMPACTORS SHALL BE USED FOR COMPACTION WITHIN 18-INCHES OF THE OUTSIDE SURFACE OF ALL WATER VALVE BOXES, CATCH BASINS AND MANHOLES.
15. THE USE OF GROUT AND QUICKSET CEMENT PRODUCTS WITH ADJUSTING RINGS, BRICKS, WOOD, STONES AND OTHER SIMILAR GRADE ADJUSTMENT DEVICES TO SUPPORT CATCH BASIN FRAMES OVER CATCH BASINS AND MANHOLES WILL NOT BE PERMITTED ON THIS PROJECT. SEE CBJ STANDARD SPECIFICATIONS, SECTION 02502 - STORM SEWER MANHOLES, INLETS AND CATCH BASINS AND THE DRAWINGS FOR CATCH BASIN FRAME SUPPORT REQUIREMENTS. SANITARY SEWER MANHOLES SHALL BE ADJUSTED PER CBJ STANDARD SPECIFICATIONS 02402 - SANITARY SEWER MANHOLES AND CLEANOUTS.
16. THE CONTRACTOR SHALL INSTALL AND MAINTAIN ENGINEER APPROVED EROSION CONTROL DEVICES DURING CONSTRUCTION PER CBJ STANDARD SPECIFICATIONS SECTION 01570 REQUIREMENTS.
17. ALL WORK FOR THESE PLANS SHALL BE CONDUCTED IN STRICT ACCORDANCE WITH APPLICABLE LOCAL, STATE AND FEDERAL LAWS AND STANDARDS.

ABBREVIATIONS

AC	ASBESTOS CEMENT
ACS	ALASKA COMMUNICATIONS SYSTEMS
AEL&P	ALASKA ELECTRIC LIGHT & POWER
APPROX	APPROXIMATE
AST	ABOVEGROUND STORAGE TANK
BC	BACK OF CURB
BLVD	BOULEVARD
BOP	BEGINNING OF PROJECT
CB	CATCH BASIN
CBJ	CITY & BOROUGH OF JUNEAU
CHB	CHORD BEARING
CHL	CHORD LENGTH
C/L	CENTERLINE
CI	CAST IRON
CLR	CLEAR
CMP	CORRUGATED METAL PIPE
CONC	CONCRETE
CONT	CONTINUOUS
CPP	CORRUGATED POLYETHYLENE PIPE
CTE	CONNECT TO EXISTING
DI	DUCTILE IRON
DIP	DUCTILE IRON PIPE
DIA	DIAMETER
E	EASTING
EG	EXISTING GRADE
EL	ELEVATION
EOP	END OF PROJECT
EP	EDGE OF PAVEMENT
EXIST	EXISTING
EXP	EXPANSION
FG	FINISH GRADE
FH	FIRE HYDRANT
FL	FLOW LINE
GCI	GENERAL COMMUNICATION INC.
GV	GATE VALVE
HDPE	HIGH DENSITY POLYETHYLENE
HP	HIGH PRESSURE
IE	INVERT ELEVATION
L	LENGTH
LP	LOW POINT
LT	LEFT
MAX	MAXIMUM
MIN	MINIMUM
MJ	MECHANICAL JOINT
MTE	MATCH TO EXISTING
N	NORTHING
N/A	NOT APPLICABLE
NFS	NON-FROST SUSCEPTIBLE
NTS	NOT TO SCALE
NVC	NO VERTICAL CURVE
OC	ON CENTER
PC	POINT OF CURVATURE
PERF	PERFORATED
PI	POINT OF INTERSECTION
P/L	PROPERTY LINE
POC	POINT ON CURVE
POL	POINT ON LINE
PP	POWER POLE
PT	POINT OF TANGENCY
PVC	POLYVINYL CHLORIDE
R	RADIUS
ROW	RIGHT-OF-WAY
RP	RADIUS POINT
RT	RIGHT
SDMH	STORM DRAIN MANHOLE
SS	SANITARY SEWER
SSCO	SANITARY SEWER CLEANOUT
SSMH	SANITARY SEWER MANHOLE
STA	STATION
STD	STANDARD
SWPPP	STORM WATER POLLUTION PREVENTION PLAN
T	TANGENT
TBG	TOP BACK OF GUTTER
TBM	TEMPORARY BENCH MARK
TC	TOP OF CONCRETE
TOB	TOP OF BANK
TOP	TOP OF PIPE
TYP	TYPICAL
UD	UNDERDRAIN
UON	UNLESS OTHERWISE NOTED
UST	UNDERGROUND STORAGE TANK
VC	VERTICAL CURVE
VERT	VERTICAL
VPI	VERTICAL POINT OF INTERSECTION
W/	WITH

SYMBOLS

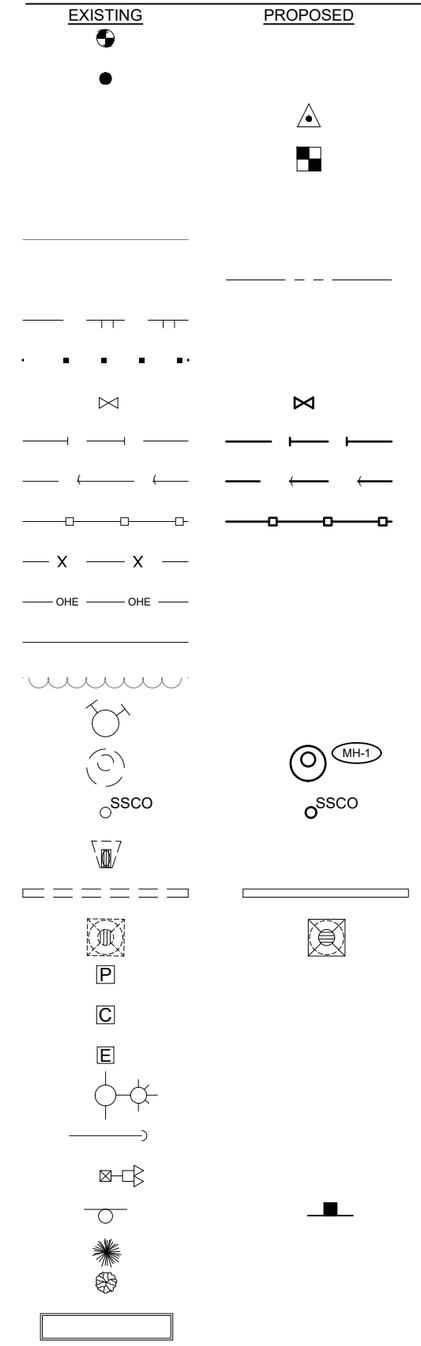

PRIMARY MONUMENT
SECONDARY MONUMENT
SURVEY SPIKE / MAG NAIL
TEMPORARY BENCHMARK
PROPERTY / BOUNDARY LINE
PROPERTY / BOUNDARY LINE UNSURVEYED
PROJECT BASELINE
TOP OF BANK
TOE OF SLOPE
WATER GATE VALVE/CURB STOP
WATER LINE/SERVICE
SEWER LINE/SERVICE
WOODEN FENCE
CHAIN-LINK FENCE
OVERHEAD ELECTRIC LINE
ASPHALT PAVEMENT
TREE LINE
FIRE HYDRANT
SANITARY SEWER MANHOLE
SANITARY SEWER CLEANOUT
CONCRETE HEADWALL W/ TRASH RACK
STORM SEWER PIPE
CATCH BASIN W/ AREA DRAIN
TELEPHONE PEDESTAL
CABLE PEDESTAL
ELECTRICAL PEDESTAL
POWER POLE WITH LIGHT
GUY WIRE
GANG STYLE MAILBOX
STREET SIGN
CONIFEROUS TREE
DECIDUOUS TREE
BUILDING FOUNDATION

P:\2020\20098JN-Bicknell_Delta\CIC\0001cmd\20098JN.dwg PLOT: December 03, 2020 at: 3:58pm Mick.Minsch

DESIGN MSM
DRAWN MSM
CHECK JMP
APPROVED JMP
FILE:

No.	DATE	REVISION	BY	APRVD.

DELTA DRIVE SUBDIVISION

JUNEAU, AK

STATE OF ALASKA 49TH Joseph M. Pusich CE 8152 REGISTERED PROFESSIONAL ENGINEER 12/03/20

PDC ENGINEERS
PLAN • DESIGN • CONSTRUCT
A BESPEC COMPANY
907.780.6060 | AECC605

GENERAL NOTES, ABBREVIATIONS AND SYMBOLS

DATE: Dec 03, 2020
PDC No. 20098JN
SHEET C002

WATER SERVICE SUMMARY

LOT No.	STATION & OFFSET	SIZE/TYPE	REMARKS
2	10+95.1, 13.5' LT	1" POLY	SEE NOTE 1
3	11+28.9, 13.5' LT	1" POLY	SEE NOTE 1
4	11+81.8, 13.5' LT	1" POLY	SEE NOTE 1
5	12+15.3, 13.5' LT	1" POLY	SEE NOTE 1
6	12+58.8, 21.4' LT	1" POLY	SEE NOTE 1
7	11+68.0, 13.4' RT	1" POLY	NEW SERVICE
8	12+28.0, 13.5' RT	1" POLY	NEW SERVICE
9	14+71.4, 13.4' RT	1" POLY	NEW SERVICE
10	14+11.4, 13.3' RT	1" POLY	NEW SERVICE
11	15+22.0, 18.1' LT	1" POLY	SEE NOTE 1
12	14+96.0, 13.5' LT	1" POLY	SEE NOTE 1
13	14+62.5, 13.5' LT	1" POLY	SEE NOTE 1
14	14+09.2, 13.5' LT	1" POLY	SEE NOTE 1
15	13+85.5, 21.6' LT	1" POLY	SEE NOTE 1

NOTES:

1. EXISTING FOUNDATION PADS REPORTED TO HAVE 3/4" POLY WATER SERVICES TO EACH UNIT. EXISTING WATER SERVICES MAY BE REUSED IF FOUND TO BE IN SATISFACTORY CONDITION. FLUSHING, DISINFECTION AND PRESSURE TESTING SHALL BE PERFORMED ON THE EXISTING 3/4" POLY WATER SERVICES.

SEWER SERVICE SUMMARY

LOT No.	STATION & OFFSET	SIZE/TYPE	REMARKS
2	10+82.7, 14.0' LT	4" PVC	SEE NOTE 1
3	11+16.6, 14.0' LT	4" PVC	SEE NOTE 1
4	11+71.4, 14.0' LT	4" PVC	SEE NOTE 1
5	12+02.3, 14.0' LT	4" PVC	SEE NOTE 1
6	12+52.1, 14.0' LT	4" PVC	SEE NOTE 1
7	11+38.0, 14.5' RT	4" PVC	NEW SERVICE
8	11+98.0, 14.5' RT	4" PVC	NEW SERVICE
9	15+01.5, 14.5' RT	4" PVC	NEW SERVICE
10	14+41.4, 14.5' RT	4" PVC	NEW SERVICE
11	15+27.7, 14.0' LT	4" PVC	SEE NOTE 1
12	15+07.9, 14.0' LT	4" PVC	SEE NOTE 1
13	14+77.6, 14.0' LT	4" PVC	SEE NOTE 1
14	14+22.8, 14.0' LT	4" PVC	SEE NOTE 1
15	13+92.1, 14.0' LT	4" PVC	SEE NOTE 1

NOTES:

1. SEWER SERVICE LOCATIONS SHOWN ARE FROM LIMITED AS-BUILT INFORMATION AND WERE NOT FIELD LOCATED. EXISITNG 4" PVC SEWER SERVICES EXIST FOR LOTS 2-6 AND LOTS 11-15. CONTRACTOR SHALL FIELD LOCATE ALL SEWER SERVICES TO CONFIRM FINAL LOCATION FOR NEW SEWER SERVICE CLEANOUT INSTALLATION. STATION & OFFSET ARE GIVEN TO THE CENTER OF THE NEW CLEANOUT LID. IF EXISTING SANITARY SEWER SERVICES FOUND TO BE IN GOOD CONDITION CONTRACTOR MAY KEEP THEM IN SERVICE.
2. CONSTRUCT NEW 4" PVC SEWER SERVICE AND INSTALL NEW CLEANOUT NEAR PROPERTY LINE PER CBJ STANDARD DETAIL 213 AND CONNECT TO EXISTING SEWER SERVICE.
3. ADJUST SEWER SERVICE SLOPE TO PROVIDE MAXIMUM SEPARATION BETWEEN UTILITY CROSSINGS. INSTALL SWEEPS AS REQUIRED UPON APPROVAL OF THE ENGINEER.

STORM DRAIN STRUCTURE FRAME & GRATE SUMMARY

STRUCTURE No.	EAST JORDAN, OLYMPIC FOUNDRY Co., CBJ STANDARD No., OR APPROVED EQUAL
S-1	OLYMPIC FOUNDARY MH34SC

P:\2020\20098JN-Bicknell_Delta\CC0002cns\20098JN.dwg PLOT: December 03, 2020 at: 3:58pm Micki.Mirisch

DESIGN MSM
DRAWN MSM
CHECK JMP
APPROVED JMP
FILE:

No.	DATE	REVISION	BY	APRVD.

DELTA DRIVE SUBDIVISION

BICKNELL INC. QUALITY CONSTRUCTION

STATE OF ALASKA 49TH Joseph M. Pusich CE 8152 REGISTERED PROFESSIONAL ENGINEER 12/03/20

PDC ENGINEERS
PLAN • DESIGN • CONSTRUCT
A RESPEC COMPANY
3000 Commercial Drive, Juneau, Alaska 99801
907.780.6060 | AECC605

SUMMARY TABLES

DATE: Dec 03, 2020
PDC No. 20098JN

SHEET
C003

SURVEY NOTES

1. THE PURPOSE OF THIS SURVEY IS TO PROVIDE A TOPOGRAPHIC DESIGN SURVEY OF THE DELTA DRIVE DEVELOPMENT.
2. THE FIELD SURVEYS WERE PERFORMED ON MAY 26-27, 2020.
3. THE SURVEY EQUIPMENT UTILIZED DURING THIS SURVEY WAS TRIMBLE R8-2 GNSS ROVER AND BASE AND A TRIMBLE S-7 ROBOTIC TOTAL STATION UTILIZING STANDARD LASER MEASURING TECHNIQUES.
4. ALL DISTANCES AND DIMENSIONS ARE IN U.S. SURVEY FEET AND REDUCED TO THEIR HORIZONTAL VALUES.
5. CONTROL AND MONUMENT COORDINATES ARE IN AN ASSUMED LOCAL COORDINATE SYSTEM.
6. ELEVATIONS ARE IN AN ASSUMED LOCAL VERTICAL DATUM.
7. CONTOURS ARE SHOWN AT 1-FOOT INTERVALS.
8. ALL UTILITIES WERE LOCATED BY PDC AND ARE BASED ON OBSERVABLE EVIDENCE AND ABOVE GROUND APPURTENANCES AND FIELD RETRACEMENT PERFORMED BY PDC.
9. THIS SURVEY DOES NOT CONSTITUTE A SUBDIVISION AS PER ALASKA STATUTE 40.15.900(5)(a).

EXIST. SSCO	(CO1)
STA 10+04.9,	33.3 LT
EXIST. LID EL=	97.31
SW 8" (OUT) IE=	94.81

EXIST. SSMH	(M1)
STA 08+90.8,	25.9 RT
EXIST. LID EL=	98.50
E 6" (IN) IE=	92.94
NW 8" (OUT) IE=	92.84

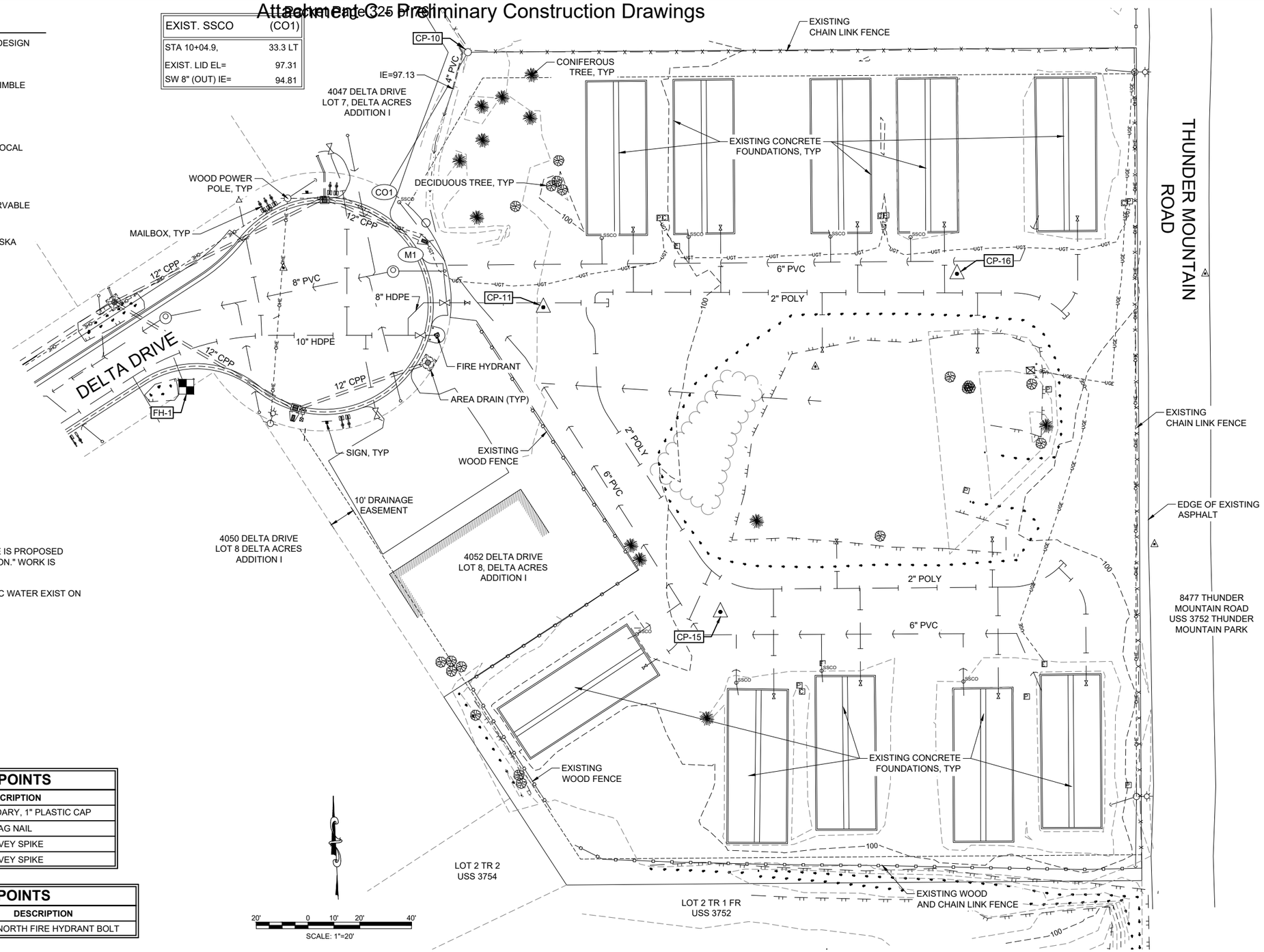

NOTES:
1. ROADWAY AND UTILITY INFORMATION SHOWN ON DELTA DRIVE IS PROPOSED FROM CBJ CONTRACT BE21-028 "DELTA DRIVE RECONSTRUCTION." WORK IS SCHEDULED FOR SPRING/SUMMER 2021.
2. EXISTING 6" PVC SEWER MAIN AND 2" POLY PIPE FOR DOMESTIC WATER EXIST ON SITE.

TABLE OF HORIZONTAL CONTROL POINTS

POINT #	NORTHING	EASTING	DESCRIPTION
CP 10	10112.63	10356.34	S-3650, SECONDARY, 1" PLASTIC CAP
CP 11	10014.23	10385.34	MAG NAIL
CP 15	9896.49	10453.74	SURVEY SPIKE
CP 16	10027.18	10545.16	SURVEY SPIKE

TABLE OF VERTICAL CONTROL POINTS

POINT #	NORTHING	EASTING	ELEVATION	DESCRIPTION
FH-1	9983.52	10247.42	100.44'	"X" ON NORTH FIRE HYDRANT BOLT

P:\2020\20098JN-Bicknell_Delta\CIC\2001cns\20098JN.dwg, PLOT: December 03, 2020 at: 3:58pm Micki Minsch

DESIGN MSM
DRAWN MSM
CHECK JMP
APPROVED JMP
FILE:

No.	DATE	REVISION	BY	APRVD.

DELTA DRIVE SUBDIVISION
JUNEAU, AK

BICKNELL INC. QUALITY CONSTRUCTION

STATE OF ALASKA 49TH Joseph M. Pusich CE 8152 REGISTERED PROFESSIONAL ENGINEER 12/03/20

PDC ENGINEERS
PLAN • DESIGN • CONSTRUCT
A DESPEC COMPANY
907.780.6060 | AECC605

EXISTING SITE CONDITIONS

DATE: Dec 03, 2020
PDC No. 20098JN
SHEET C004

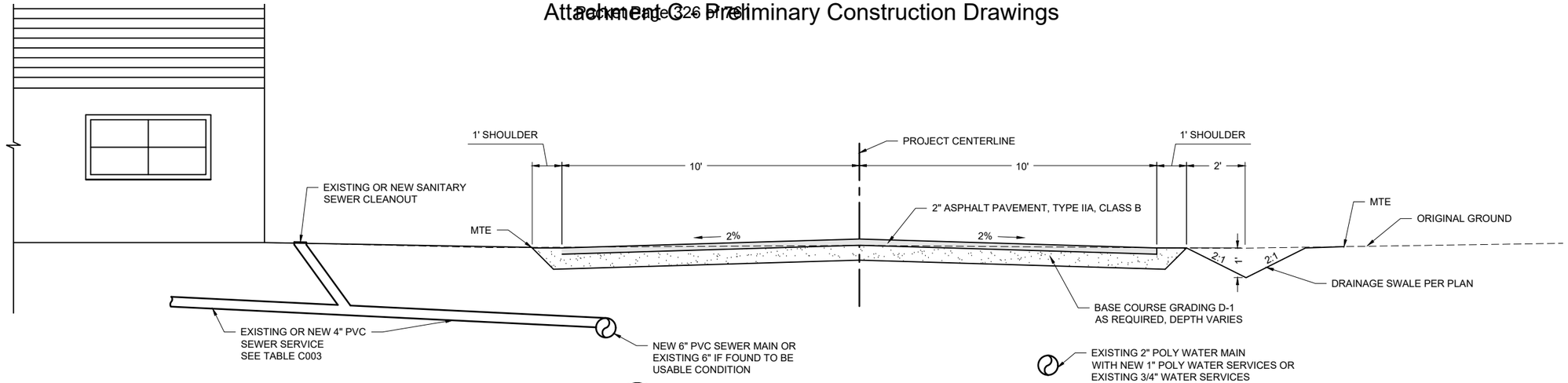

1 / 100 ROADWAY TYPICAL SECTION
SCALE: NTS

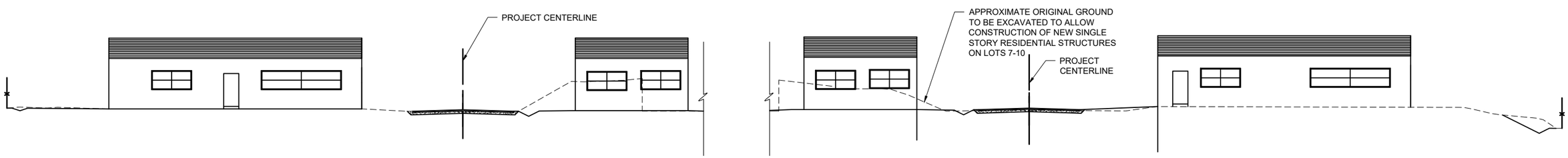

2 / C100 SITE TYPICAL SECTION
SCALE: NTS

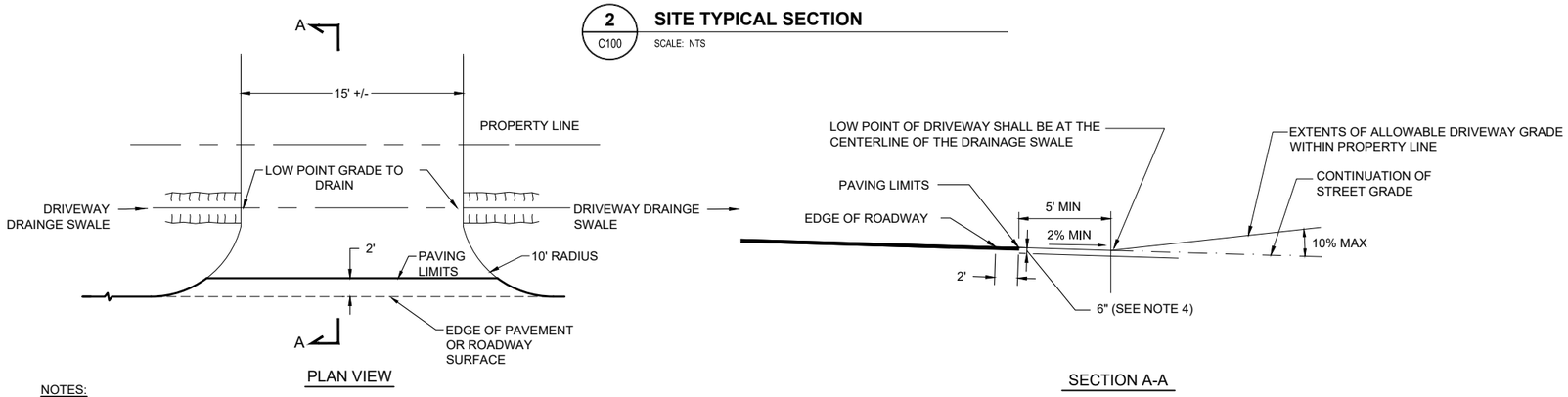

NOTES:

1. PAVING LIMIT FOR DRIVEWAYS SHALL BE 2' FROM THE EDGE OF ROADWAY OR AS APPROVED BY THE ENGINEER.
2. DRIVEWAY SWALE SHALL BE GRADED TO DRAIN INTO DRAINAGE SWALE

3 / C100 TYPICAL DRIVEWAY SWALE DETAIL
SCALE: NTS

SHEET C100 NOTES:

1. EXISTING 2" POLY WATER LINE WILL BE FLUSHED, DISINFECTED AND PRESSURE TESTED IN ACCORDANCE WITH CBJ STANDARD SPECIFICATIONS TO ENSURE COMPLIANCE WITH PUBLIC DRINKING WATER REGULATIONS.

P:\2020\20098JN-Bicknell_Delta\CIC3001\ms\20098JN.dwg PLOT: December 03, 2020at: 3:59pm Micki Minsch

DESIGN	MSM
DRAWN	MSM
CHECK	JMP
APPROVED	JMP
FILE:	

No.	DATE	REVISION	BY	APRVD.

DELTA DRIVE SUBDIVISION

DELTA JUNCTION, AK

BICKNELL INC. QUALITY CONSTRUCTION

STATE OF ALASKA 49TH Joseph M. Pusich CE 8152 REGISTERED PROFESSIONAL ENGINEER 12/03/20

PDC ENGINEERS
PLAN • DESIGN • CONSTRUCT
A BESPEC COMPANY
907.780.6060 | AECC605

TYPICAL SECTIONS

DATE: Dec 03, 2020
PDC No. 20098JN

SHEET C100

Attachment C - Page 327 of 781

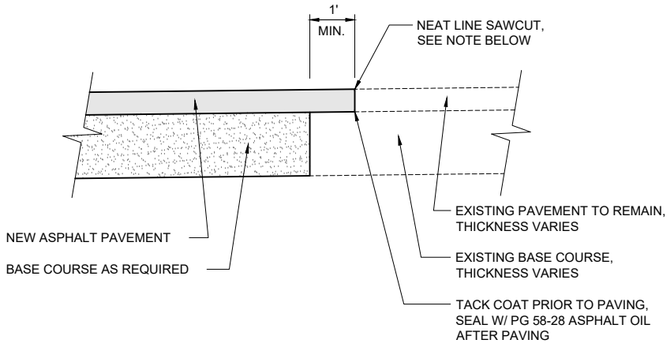

NOTE:
SAWCUT OF EXISTING PAVEMENT SHALL NOT BE MADE UNTIL 24 HOURS PRIOR TO FINAL PAVING.

1 / C101 PAVEMENT MATCH DETAIL
SCALE: NTS

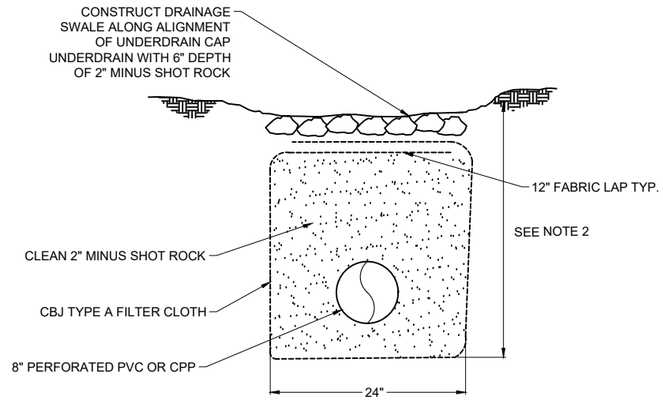

NOTES:
1. OUTFALL CONNECTIONS TO DAYLIGHT NEAR CULVERT INLETS PER PLAN.
2. DEPTH OF UNDERDRAIN VARIES, MIN SLOPE=0.50%

2 / C101 8" UNDERDRAIN DETAIL
SCALE: NTS

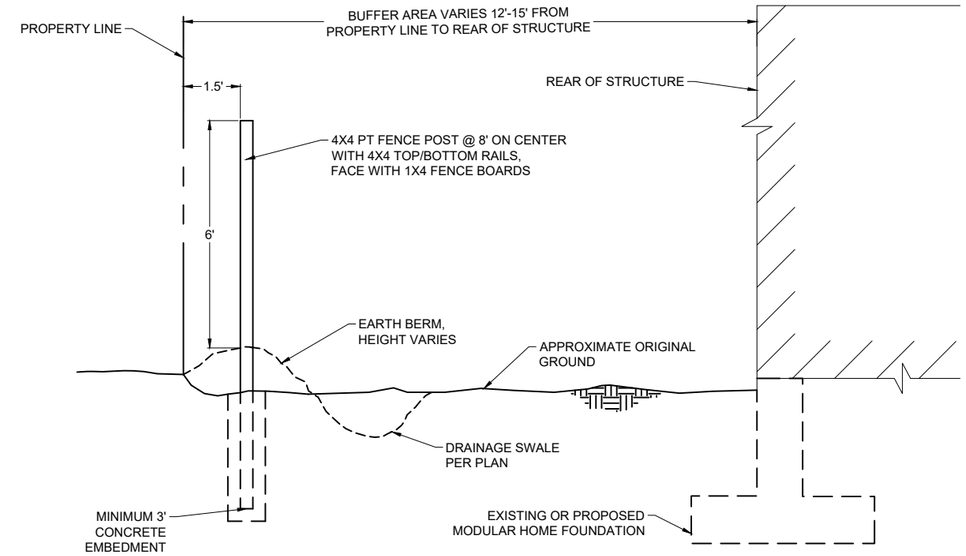

3 / C101 TYPICAL FENCE AT REAR OF DWELLING
SCALE: 1"=2'

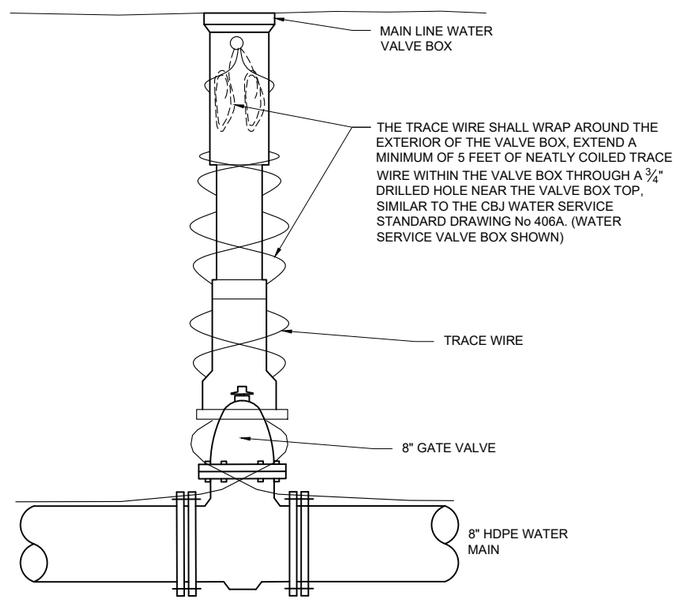

4 / C101 MAIN LINE VALVE TRACE WIRE TERMINATION DETAIL
SCALE: NTS

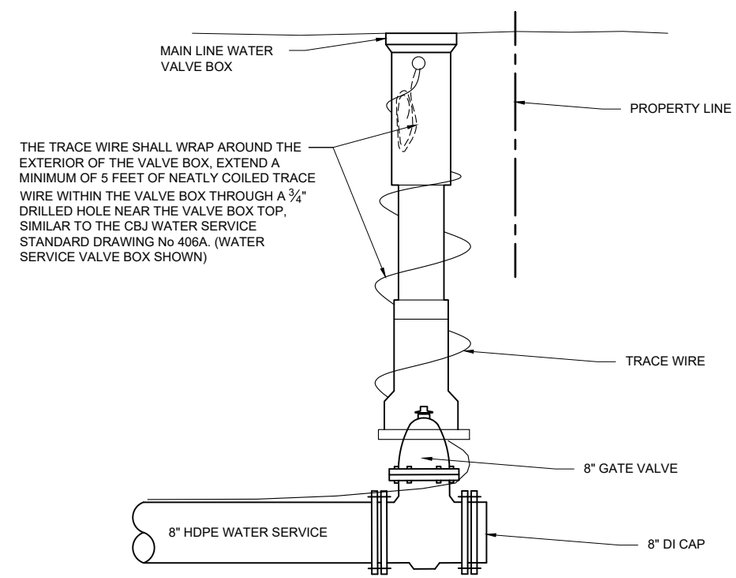

5 / C101 WATER SERVICE VALVE TRACE WIRE TERMINATION DETAIL
SCALE: NTS

DESIGN MSM
DRAWN MSM
CHECK JMP
APPROVED JMP
FILE:

No.	DATE	REVISION	BY	APRVD.

DELTA DRIVE SUBDIVISION

DELTA JUNCTION, AK

BICKNELL INC. QUALITY CONSTRUCTION

STATE OF ALASKA 49TH Joseph M. Pusich CE 8152 REGISTERED PROFESSIONAL ENGINEER 12/03/20

PDC ENGINEERS
PLAN • DESIGN • CONSTRUCT
A BESPEC COMPANY
907.780.6060 | AECC605

CONSTRUCTION DETAILS

DATE: Dec 03, 2020
PDC No. 20098JN

SHEET
C101

P:\2020\20098JN-Bicknell_Delta\CIC\3001cns\20098JN.dwg, PLOT: December 03, 2020 at: 3:59pm Micki Minsch

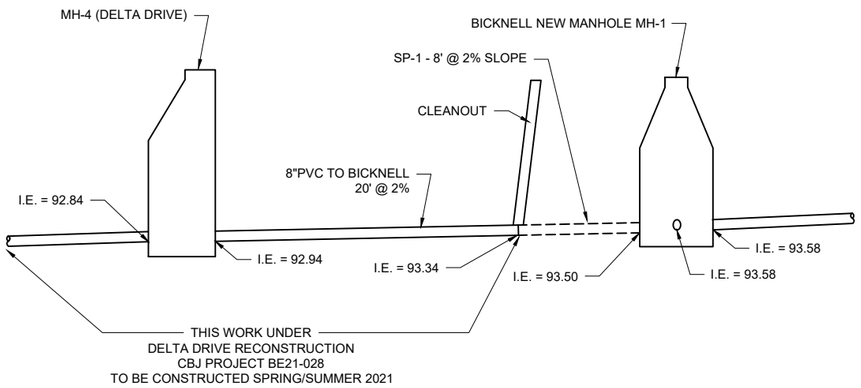

1 / C102 **SEWER PROFILE CONNECTION**

SCALE: NTS

DESIGN MSM
DRAWN MSM
CHECK JMP
APPROVED JMP
FILE:

No.	DATE	REVISION	BY	APRVD.

DELTA DRIVE SUBDIVISION

BICKNELL INC. QUALITY CONSTRUCTION

STATE OF ALASKA 49TH Joseph M. Pusich CE 8152 12/03/20

PDC ENGINEERS
PLAN • DESIGN • CONSTRUCT
A RESPEC COMPANY
907.780.6060 | AECC605

CONSTRUCTION DETAILS

DATE: Dec 03, 2020
PDC No. 20098JN

SHEET C102

P:\2020\20098JN-Bicknell_Delta\CIC\3001\cnst\20098JN.dwg PLOT: December 03, 2020 at: 3:59pm Mick Minsch

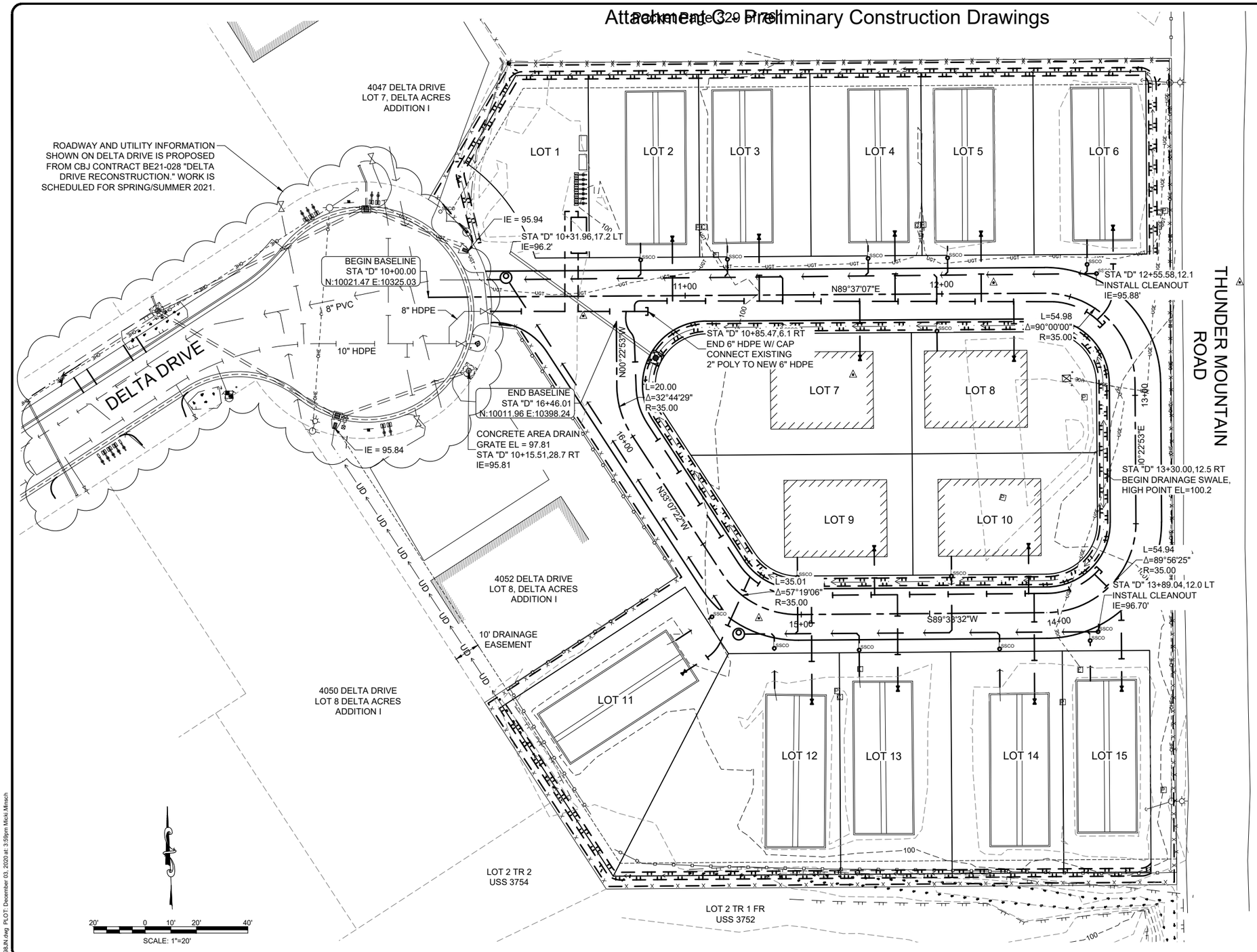

DIAL BEFORE YOU DIG!
586-1333
U/G POWER, TELEPHONE & T.V. SHOWN ON THIS DRAWING INDICATE EXISTENCE ONLY AND DO NOT SUBSTITUTE FOR FIELD LOCATES
FOR ACS AND GCI LOCATES DIAL THE 811 ALASKA DIGLINE

8477 THUNDER MOUNTAIN ROAD
USS 3752 THUNDER MOUNTAIN PARK

P:\2020\20098JN-Bicknell_Delta\C\C2001cns\20098JN.dwg PLOT: December 03, 2020 at: 3:59pm Micki Minsch

DESIGN	MSM
DRAWN	MSM
CHECK	JMP
APPROVED	JMP
FILE:	

No.	DATE	REVISION	BY	APRVD.

DELTA DRIVE SUBDIVISION

BICKNELL INC. QUALITY CONSTRUCTION

STATE OF ALASKA 49TH Joseph M. Pusich CE 8152 REGISTERED PROFESSIONAL ENGINEER 12/03/20

PDC ENGINEERS
PLAN • DESIGN • CONSTRUCT
A BESPEC COMPANY
907.780.6060 | AECC605

OVERALL SITE PLAN

DATE: Dec 03, 2020
PDC No. 20098JN
SHEET
C200

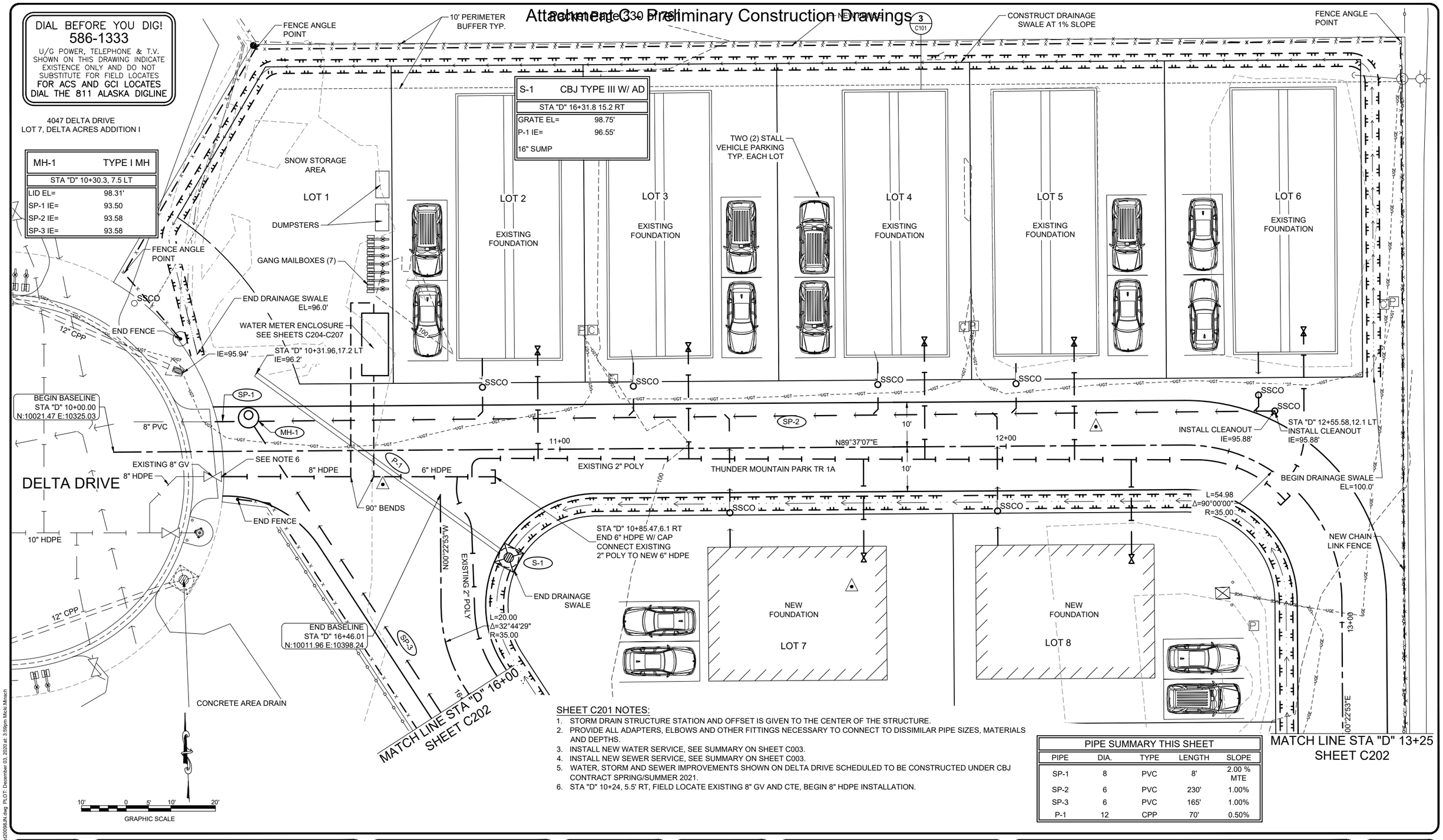

SHEET C201 NOTES:

1. STORM DRAIN STRUCTURE STATION AND OFFSET IS GIVEN TO THE CENTER OF THE STRUCTURE.
2. PROVIDE ALL ADAPTERS, ELBOWS AND OTHER FITTINGS NECESSARY TO CONNECT TO DISSIMILAR PIPE SIZES, MATERIALS AND DEPTHS.
3. INSTALL NEW WATER SERVICE, SEE SUMMARY ON SHEET C003.
4. INSTALL NEW SEWER SERVICE, SEE SUMMARY ON SHEET C003.
5. WATER, STORM AND SEWER IMPROVEMENTS SHOWN ON DELTA DRIVE SCHEDULED TO BE CONSTRUCTED UNDER CBJ CONTRACT SPRING/SUMMER 2021.
6. STA "D" 10+24, 5.5' RT, FIELD LOCATE EXISTING 8" GV AND CTE, BEGIN 8" HDPE INSTALLATION.

PIPE SUMMARY THIS SHEET

PIPE	DIA.	TYPE	LENGTH	SLOPE
SP-1	8	PVC	8'	2.00 % MTE
SP-2	6	PVC	230'	1.00%
SP-3	6	PVC	165'	1.00%
P-1	12	CPP	70'	0.50%

P:\2020\20098JN-Bicknell_Delta\CIC\20010ms\20098JN.dwg PLOT: December 03, 2020 at: 3:59pm Mick Minsch

DESIGN MSM
DRAWN MSM
CHECK JMP
APPROVED JMP
FILE:

No.	DATE	REVISION	BY	APRVD.

DELTA DRIVE SUBDIVISION

BICKNELL INC. QUALITY CONSTRUCTION

STATE OF ALASKA 49TH Joseph M. Pusich CE 8152 REGISTERED PROFESSIONAL ENGINEER 12/03/20

PDC ENGINEERS
PLAN • DESIGN • CONSTRUCT
A RESPEC COMPANY
907.780.6060 | AECC605

SITE & UTILITY PLAN

DATE: Dec 03, 2020
PDC No. 20098JN
SHEET C201

SHEET C202 NOTES:

1. STORM DRAIN STRUCTURE STATION AND OFFSET IS GIVEN TO THE CENTER OF THE STRUCTURE. FRAME ELEVATION IS GIVEN TO THE TOP, FRONT OF FRAME.
2. PROVIDE ALL ADAPTERS, ELBOWS AND OTHER FITTINGS NECESSARY TO CONNECT TO DISSIMILAR PIPE SIZES, MATERIALS AND DEPTHS.
3. INSTALL NEW WATER SERVICE, SEE SUMMARY ON SHEET C003.
4. INSTALL NEW SEWER SERVICE, SEE SUMMARY ON SHEET C003.

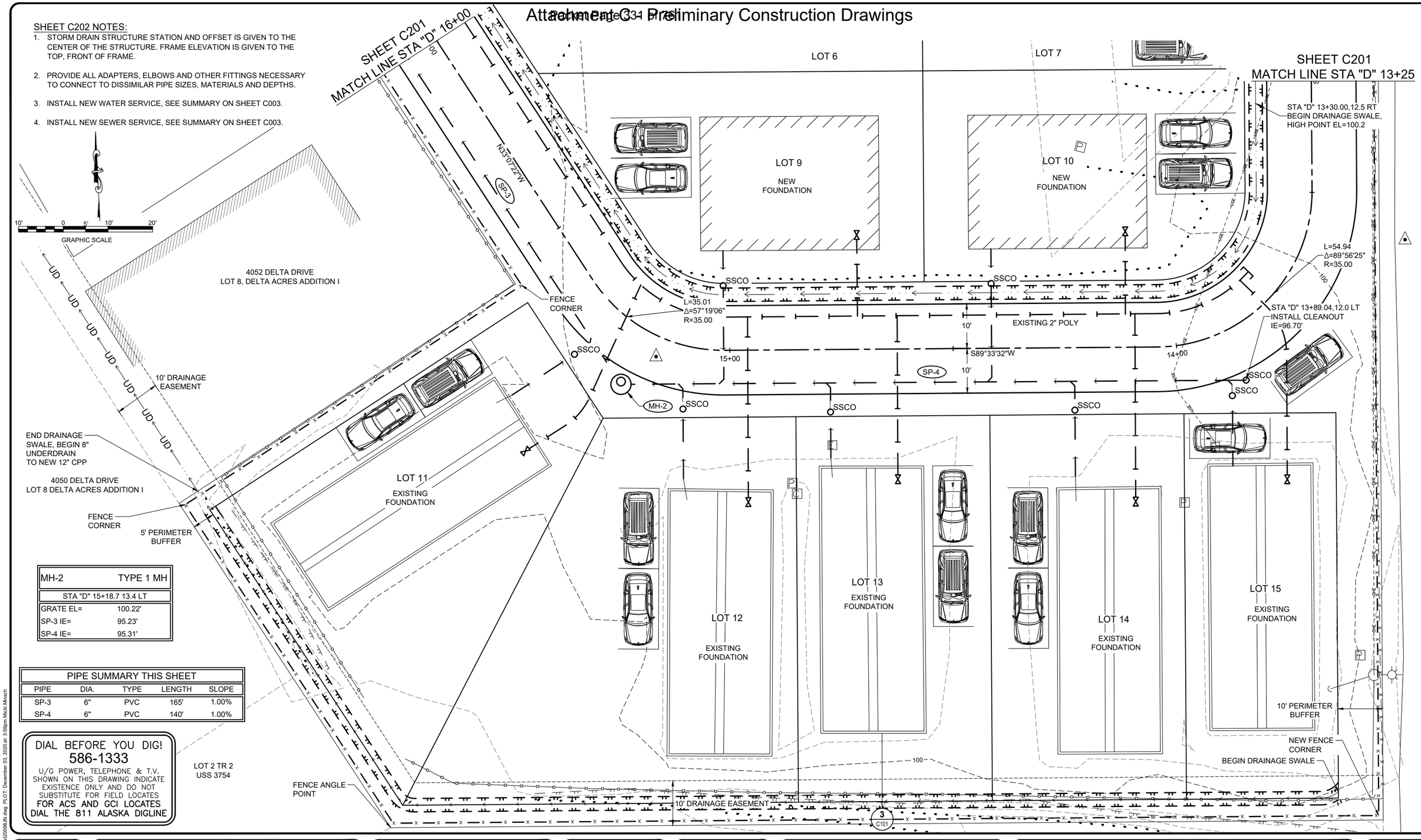

MH-2	TYPE 1 MH
STA "D" 15+18.7 13.4 LT	
GRATE EL=	100.22'
SP-3 IE=	95.23'
SP-4 IE=	95.31'

PIPE SUMMARY THIS SHEET				
PIPE	DIA.	TYPE	LENGTH	SLOPE
SP-3	6"	PVC	165'	1.00%
SP-4	6"	PVC	140'	1.00%

DIAL BEFORE YOU DIG!
586-1333
U/G POWER, TELEPHONE & T.V. SHOWN ON THIS DRAWING INDICATE EXISTENCE ONLY AND DO NOT SUBSTITUTE FOR FIELD LOCATES
FOR ACS AND GCI LOCATES
DIAL THE 811 ALASKA DIGLINE

DESIGN MSM
DRAWN MSM
CHECK JMP
APPROVED JMP
FILE:

No.	DATE	REVISION	BY	APRVD.

DELTA DRIVE SUBDIVISION

BICKNELL INC. QUALITY CONSTRUCTION

STATE OF ALASKA 49TH Joseph M. Pusich CE 8152 REGISTERED PROFESSIONAL ENGINEER 12/03/20

PDC ENGINEERS
PLAN • DESIGN • CONSTRUCT
A BESPEC COMPANY
907.780.6060 | AECC605

SITE & UTILITY PLAN

DATE: Dec 03, 2020
PDC No. 20098JN
SHEET C202

P:\2020\20098JN-Bicknell_Delta\CC2001\sta\20098JN.dwg PLOT: December 03, 2020 at: 3:59pm Micki Minsch

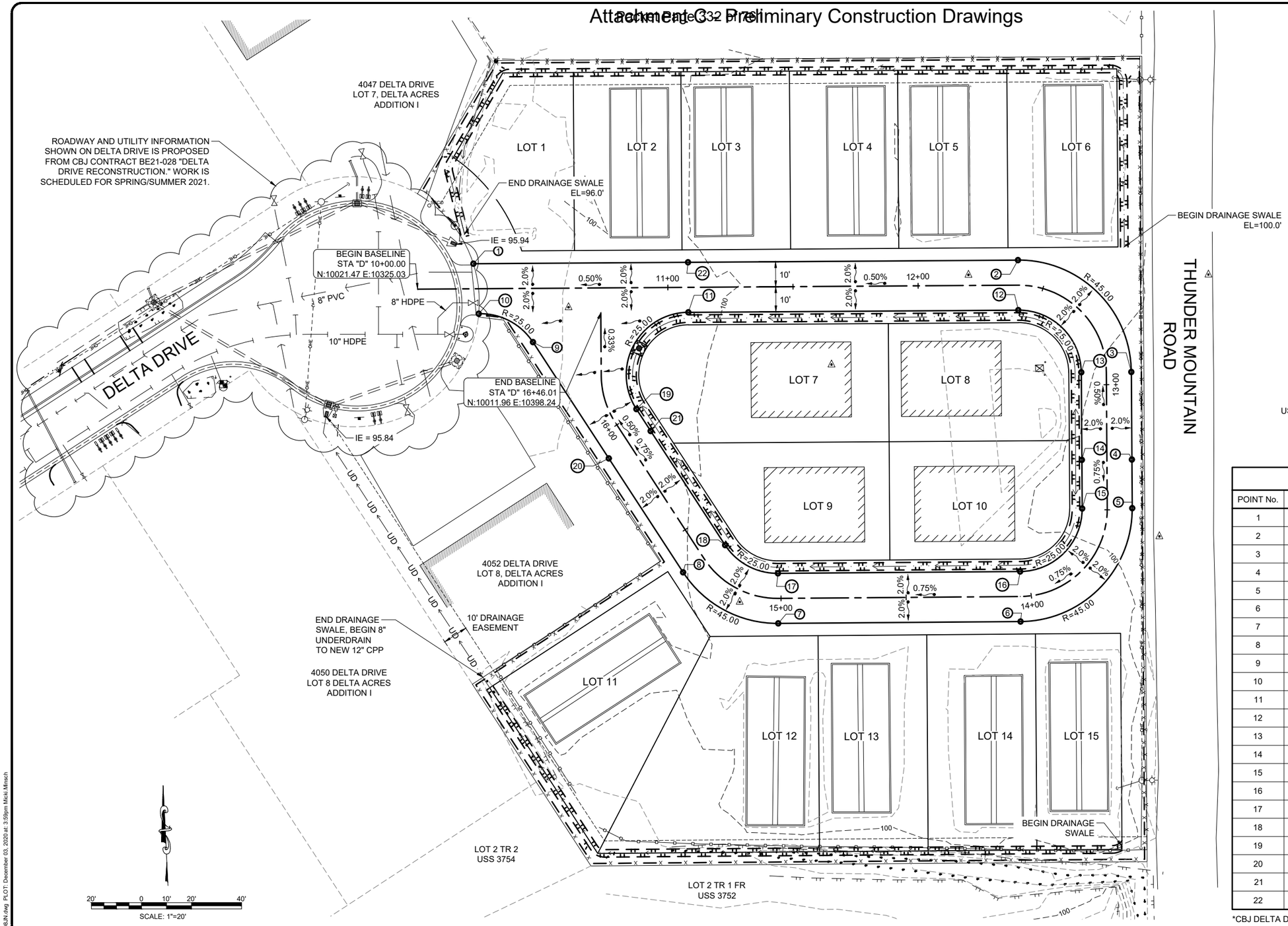

DIAL BEFORE YOU DIG!
586-1333
U/G POWER, TELEPHONE & T.V. SHOWN ON THIS DRAWING INDICATE EXISTENCE ONLY AND DO NOT SUBSTITUTE FOR FIELD LOCATES
FOR ACS AND GCI LOCATES DIAL THE 811 ALASKA DIGLINE

GRADE POINT SUMMARY TABLE THIS SHEET

POINT No.	NORTHING	EASTING	ELEVATION	DESCRIPTION
1	10031.62	10347.33	98.29 *	EDGE OF PAVEMENT/MTE
2	10033.07	10564.96	100.32	EDGE OF PAVEMENT/PC
3	9988.37	10610.26	100.88	EDGE OF PAVEMENT/PT
4	9953.35	10610.49	101.24	EDGE OF PAVEMENT/HIGH POINT
5	9933.92	10610.62	101.09	EDGE OF PAVEMENT/PC
6	9888.64	10565.97	100.68	EDGE OF PAVEMENT/PT
7	9887.89	10469.17	99.97	EDGE OF PAVEMENT/PC
8	9908.30	10431.14	99.67	EDGE OF PAVEMENT/PT
9	10000.30	10371.11	98.59	EDGE OF PAVEMENT/PC
10	10011.64	10349.47	98.34 *	EDGE OF PAVEMENT/PT/MTE
11	10012.19	10433.23	99.66	EDGE OF PAVEMENT/PT
12	10013.07	10565.10	100.32	EDGE OF PAVEMENT/PC
13	9988.24	10590.26	100.88	EDGE OF PAVEMENT/PT
14	9953.22	10590.50	101.24	EDGE OF PAVEMENT/HIGH POINT
15	9933.79	10590.62	101.09	EDGE OF PAVEMENT/PC
16	9908.64	10565.82	100.68	EDGE OF PAVEMENT/PT
17	9907.89	10469.02	99.97	EDGE OF PAVEMENT/PC
18	9919.17	10447.92	99.67	EDGE OF PAVEMENT/PT
19	9973.53	10412.46	99.19	EDGE OF PAVEMENT/PC
20	9953.85	10401.42	99.29	EDGE OF PAVEMENT
21	9964.78	10418.17	99.29	EDGE OF PAVEMENT
22	10032.19	10433.09	99.66	EDGE OF PAVEMENT

*CBJ DELTA DRIVE RECONSTRUCTION TOP OF ASPHALT PAVEMENT ELEVATION

P:\2020\20098JN-Bicknell_Delta\CIC\2001ms\20098JN.dwg PLOT: December 03, 2020 at: 3:59pm Mickl.Mmsch

DESIGN MSM
DRAWN MSM
CHECK JMP
APPROVED JMP
FILE:

No.	DATE	REVISION	BY	APRVD.

DELTA DRIVE SUBDIVISION
DELTA JUNCTION, AK

BICKNELL INC. QUALITY CONSTRUCTION

STATE OF ALASKA 49TH Joseph M. Pusich CE 8152 REGISTERED PROFESSIONAL ENGINEER 12/03/20

PDC ENGINEERS
PLAN • DESIGN • CONSTRUCT
A BESPEC COMPANY
907.780.6060 | AECC605

GRADING PLAN

DATE: Dec 03, 2020
PDC No. 20098JN
SHEET
C203

NOTES:

1. CBJ SPECIFICATION 02601 - WATER SYSTEM AND 02602 - VALVES, AND OTHER CBJ STANDARD SPECIFICATIONS APPLY EXCEPT AS MODIFIED BELOW.
2. ALL JOINTS BETWEEN THE CONNECTIONS TO THE MAINLINES ON BOTH SIDES OF THE METER ENCLOSURE SHALL BE RESTRAINED.
3. ALL BOLTS, NUTS AND WASHERS SHALL BE SERIES 300 STAINLESS STEEL.
4. ALL METALLIC VALVES AND FITTINGS SHALL BE FACTORY EPOXY COATED INSIDE AND OUT, 8 MILS MINIMUM.
5. BURIED FITTINGS SHALL BE THRUST BLOCKED PER CBJ STANDARD DETAILS.
6. DIP, HDPE PIPE AND PIPE STANDS ARE PER CBJ SECTION 02602.
7. ALL PIPE AND SPOOL PIECES ABOVE GRADE ARE TO BE FLANGED, WITH 125# FLANGES. USE A FLANGE ADAPTOR WITH THE CONNECTION TO HDPE.
8. GATE VALVES SHALL HAVE HAND WHEELS.
9. PRESSURE GAUGE IS TO BE STAINLESS STEEL, GLYCERIN FILLED, WITH A 3½ OR 4-INCH FACE AND 150 TO 160 PSI PRESSURE RANGE.
10. THE GATE VALVE AHEAD OF THE METER IS TO BE FLXFL, WHILE THE VALVES ON EITHER SIDE OF THE DOUBLE CHECK MAY BE FLXVIC. VALVES SHALL COMPLY WITH AWWA C509 OR C515.
11. THE METER SHALL BE A 4-INCH NEPTUNE TRUFLO COMPOUND METER WITH A STRAINER.
12. THE DOUBLE CHECK VALVE SHALL BE A 6-INCH ZURN 350A WITH THE GATE VALVES, OR APPROVED EQUAL. THE DOUBLE CHECK SHALL MEET THE REQUIREMENTS OF AWWA C510 AND BE ASSE AND NSF LISTED.
13. TWO DUPLEX 120-V ELECTRICAL OUTLETS SHALL BE INSTALLED INSIDE THE ENCLOSURE. CONDUIT SHALL RUN FROM THE EXTERIOR MOUNTED DISCONNECT BOX NEAR THE ELECTORAL METER, UNDERGROUND, AND COME UP THROUGH THE CONCRETE SLAB. THE OUTLETS SHALL BE MOUNTED ABOVE THE FLOOR AND LOCATED FOR EASY ACCESS THROUGH THE PANELS.
14. ALL ELECTRICAL WORK SHALL BE PERFORMED BY A LICENSED ELECTRICIAN AND COMPLY WITH ALL APPROPRIATE ELECTRICAL CODES. ANY REQUIRED ELECTRICAL PERMITS SHALL BE OBTAINED. COORDINATE WITH THE LOCAL ELECTRICAL UTILITY AS NECESSARY AND PROVIDE ANY EQUIPMENT THEY REQUIRE TO COMPLETE THEIR SERVICE TO THIS LOCATION.

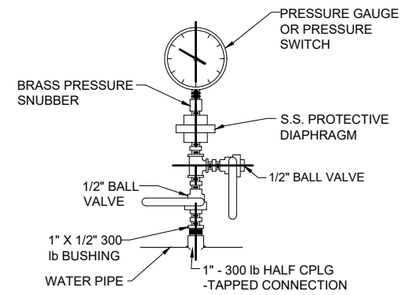

1 C204 **PRESSURE GAUGE OR SWITCH**
SCALE: NTS

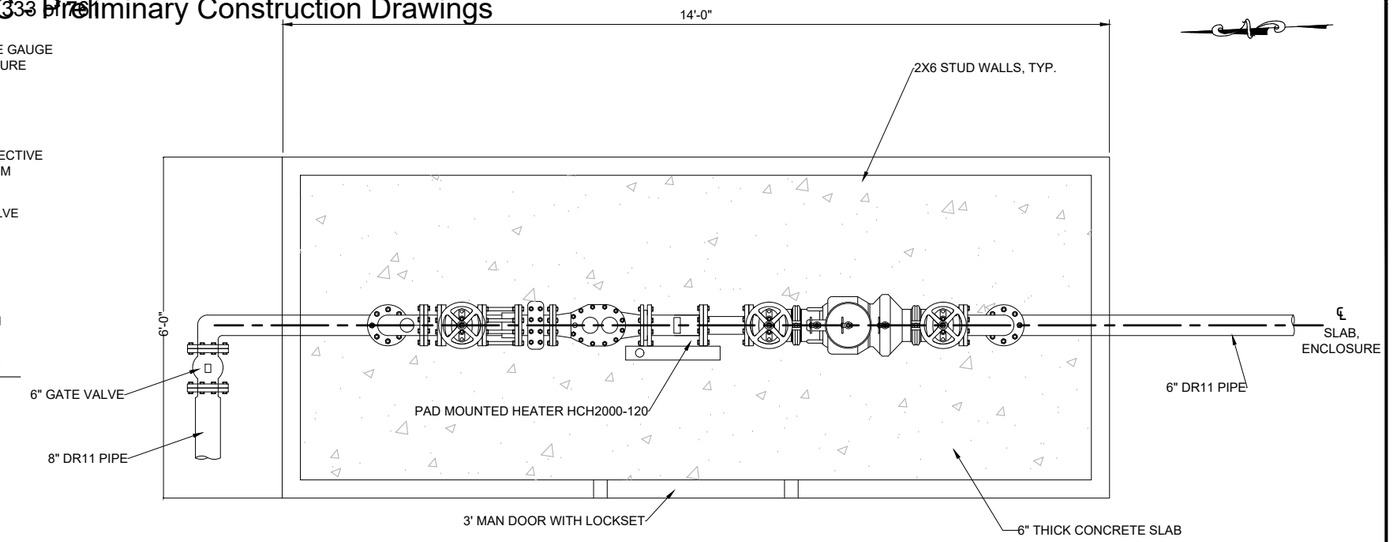

2 C204 **WATER METER ENCLOSURE - PLAN**
SCALE: NTS

DESIGNATION	COMPONENT DESCRIPTION
A	6X4" DI REDUCING 90° ELBOW W/ TAP AND 1" AIR RELEASE VALVE
B	4" NRS GATE VALVE
C	4" DISMANTLING JOINT, SET TO 8" ±
D	4" METER W/ STRAINER
E	4" DI PIPE SPOOL W/ 1" TAPPED CONNECTION, SAMPLING PORT, AND PRESSURE GAGUE (SEE DETAIL)
F	4" SPOOL PIECE
G	4" DOUBLE CHECK VALVE
H	4" DI 90° BEND

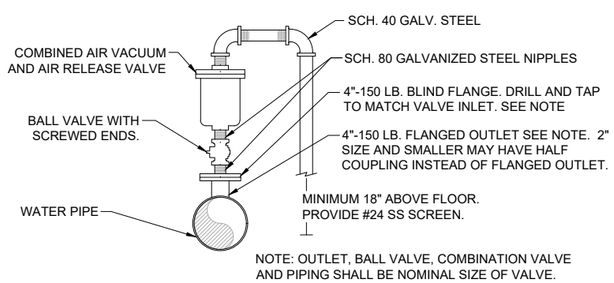

3 C204 **AIR/VACUUM & AIRE RELEASE VALVE ASSEMBLY**
SCALE: NTS

NOTES:
1. ALL JOINTS TO BE FUSED, FLANGED, OR RESTRAINED TO WITHSTAND A MINIMUM PRESSURE OF 200 PSI.

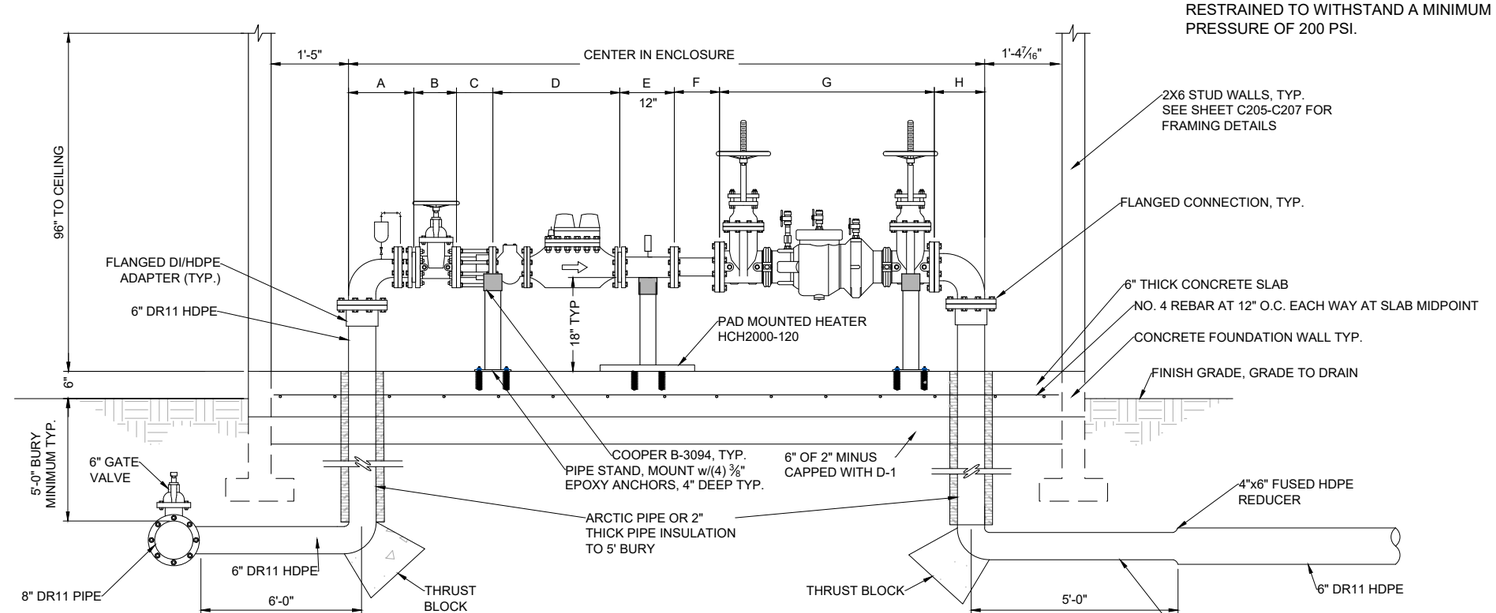

4 C204 **WATER METER ENCLOSURE - ELEVATION**
SCALE: NTS

DESIGN	MSM
DRAWN	MSM
CHECK	JMP
APPROVED	JMP
FILE:	

No.	DATE	REVISION	BY	APRVD.

DELTA DRIVE SUBDIVISION

JUNEAU, AK

BICKNELL INC. QUALITY CONSTRUCTION

STATE OF ALASKA 49TH Joseph M. Pusich CE 8152 REGISTERED PROFESSIONAL ENGINEER 12/03/20

PDC ENGINEERS
PLAN • DESIGN • CONSTRUCT
A BESPEC COMPANY
3000 Vintage Blvd, Suite 201 | Juneau, AK 99801
907.780.6060 | AECC605

WATER METER ENCLOSURE DETAILS

DATE: Dec 03, 2020
PDC No. 20098JN

SHEET C204

P:\2020\20098JN-Bicknell_Delta\DC2001\cns\20098JN.dwg PLOT: December 03, 2020 at: 3:59pm Mick.Minsch

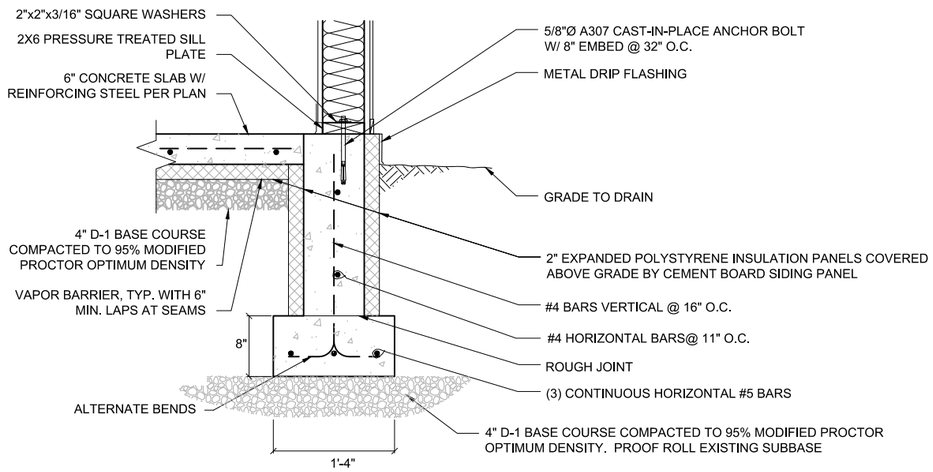

1 C205 **FOUNDATION AND STEM WALL DETAIL**
SCALE: NTS

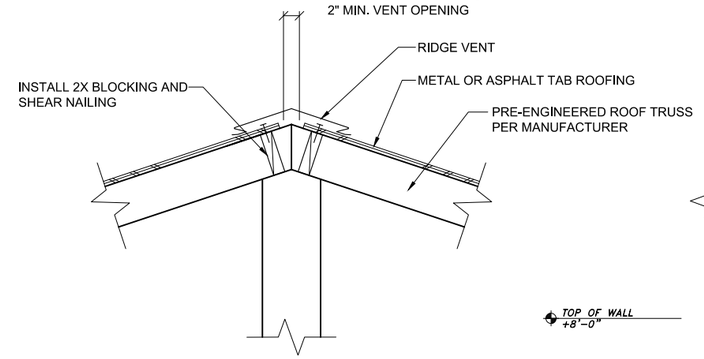

2 C205 **ROOF RIDGE VENT DETAIL**
SCALE: NTS

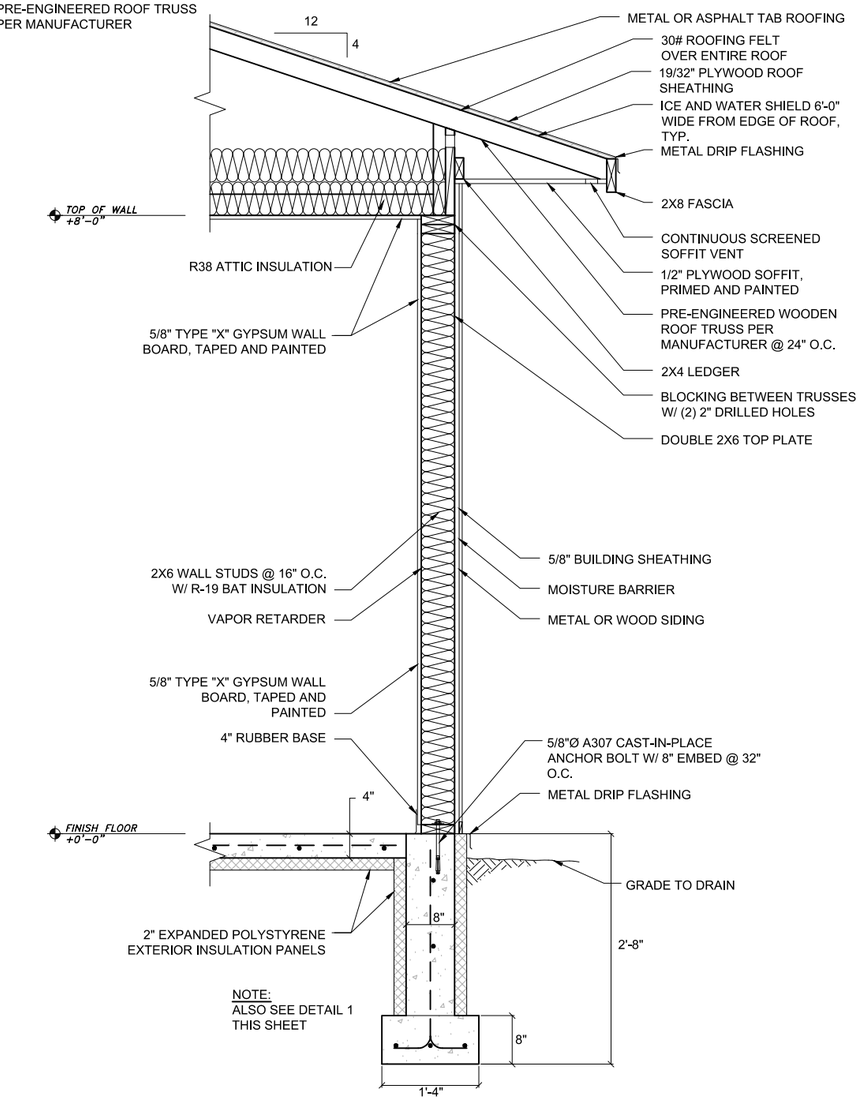

5 C205 **WALL SECTION**
SCALE: NTS

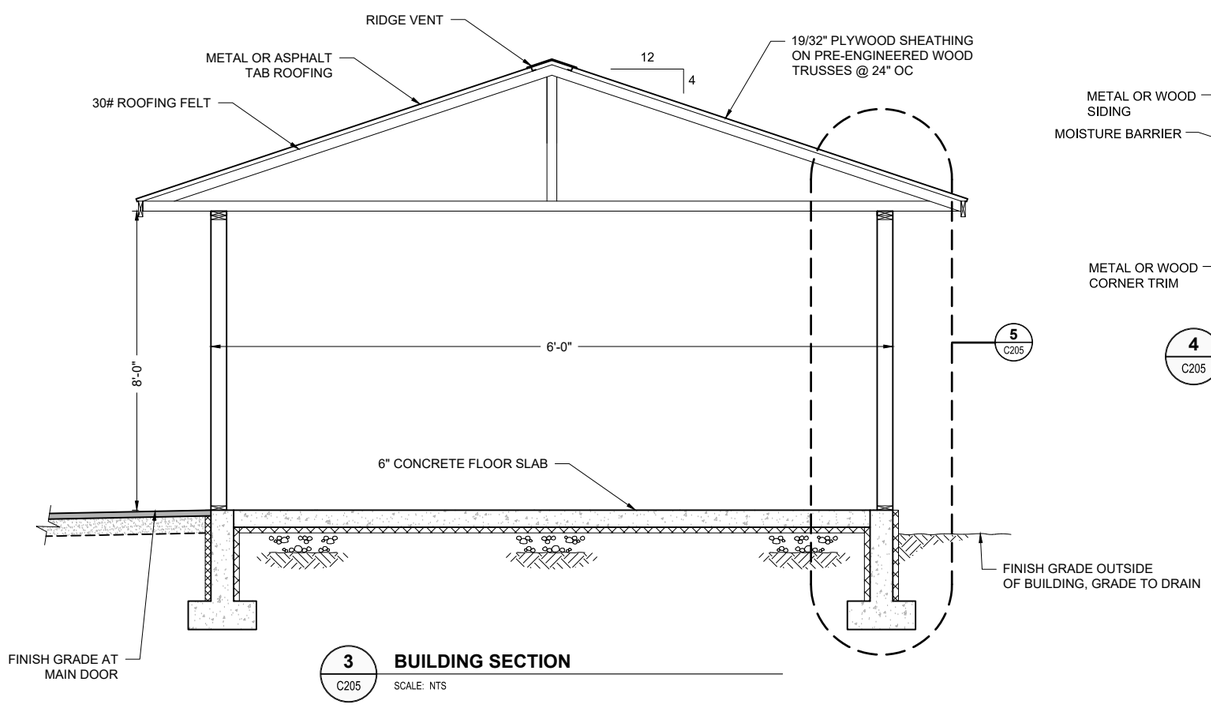

3 C205 **BUILDING SECTION**
SCALE: NTS

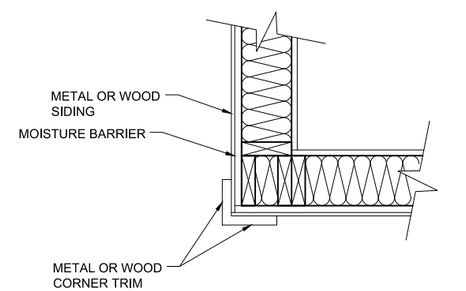

4 C205 **OUTSIDE CORNER DETAIL**
SCALE: NTS

P:\2020\20098JN-Bicknell_Delta\0C\2001cns\20098JN.dwg PLOT: December 03, 2020 at: 3:59pm Micki Minsch

DESIGN	MSM
DRAWN	MSM
CHECK	JMP
APPROVED	JMP
FILE:	

No.	DATE	REVISION	BY	APRVD.

DELTA DRIVE SUBDIVISION

BICKNELL INC. QUALITY CONSTRUCTION

STATE OF ALASKA 49TH Joseph M. Pusich CE 8152 REGISTERED PROFESSIONAL ENGINEER 12/03/20

PDC ENGINEERS
PLAN • DESIGN • CONSTRUCT
A RESPEC COMPANY
550 West 8th Avenue, Suite 200 | Anchorage, AK 99501
907.780.6060 | AECC605

WATER METER ENCLOSURE DETAILS

DATE: Dec 03, 2020
PDC No. 20098JN

SHEET C205

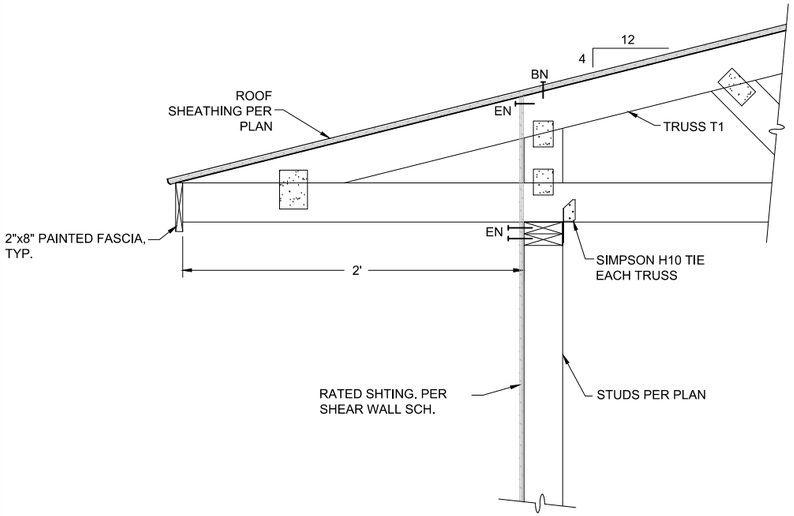

1 / C206 ROOF TRUSS TO WALL CONNECTION

SCALE: NTS

NOTES:
1. WHERE NO STUD TO STUD NAILING IS INDICATED, NAIL STUDS TOGETHER w/ 16d @ 12"o.c., TYP.
2. REF. PLANS FOR STUD SIZE & SPACING

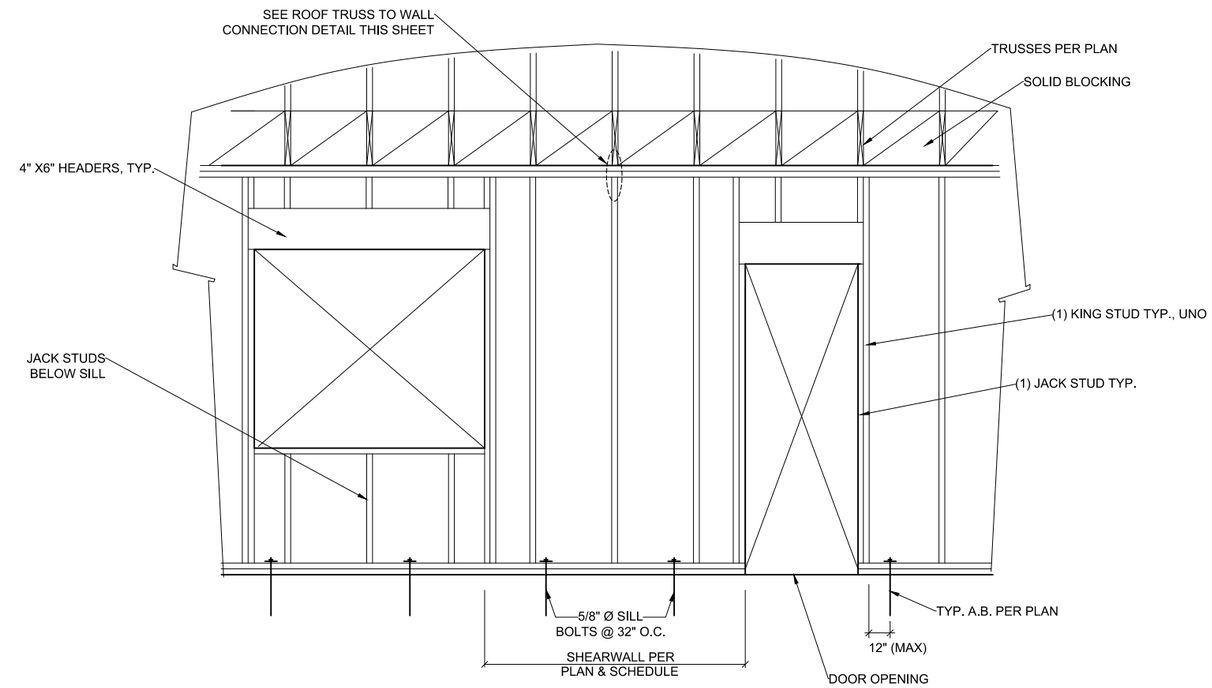

3 / C206 TYPICAL STUD FRAMING

SCALE: NTS

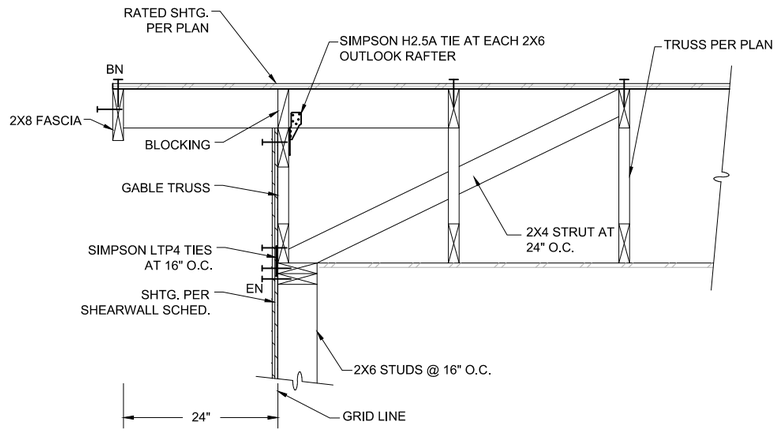

2 / C206 GABLE END DETAIL

SCALE: NTS

FRAMING NAILING SCHEDULE

CONNECTION	NAILING	CONNECTION	NAILING
TOP PLATE TO STUD, END NAIL	2x4 (2)- 16d 2x6 (3)- 16d 1 3/4"x5 1/2" LVL (3)-16d 1 3/4"x7 1/4" LVL (4)-16d 1 3/4"x9 1/4" LVL (5)-16d 1 3/4"x11 1/4" LVL (6)-16d	TOP PLATE LAPS (4'-0" MINIMUM)	16d AT 6" O.C.
STUD TO SILL PLATE, END NAIL	2x4 (2)- 16d 2x6 (3)- 16d 1 3/4"x5 1/2" LVL (3)-16d 1 3/4"x7 1/4" LVL (4)-16d 1 3/4"x9 1/4" LVL (5)-16d 1 3/4"x11 1/4" LVL (6)-16d	BUILT-UP HEADERS AND BEAMS	16d AT 16" O.C. ALONG TOP AND BOTTOM EDGE
DOUBLE SILL PLATES, FACE NAIL (STAGGER)	10d AT 12" O.C.	BUILT-UP COLUMNS BELOW BEAMS, FACE NAIL	16d AT 16" O.C. - EACH FACE
DOUBLE STUDS, FACE NAIL (STAGGER)	10d AT 12" O.C. - EACH FACE	BUILT-UP CORNER STUDS (3 STUDS MINIMUM)	16d AT 24" O.C.
DOUBLE TOP PLATES, FACE NAIL	16d AT 24" O.C.	BACKING AND BLOCKING AT TRUSSES AND 2x FRAMING, END NAIL OR TOE NAIL	(2)- 16d EACH END
TOP PLATES AT WALL INTERSECTIONS, FACE NAIL	(2)- 16d	BACKING AND BLOCKING AT I-JOIST FRAMING	SIMPSON Z2 OR EQUAL AT EACH END [W/(4)-10dx1 1/2" NAILS]

P:\2020\20098JN-Bicknell_Delta\CC2001cns\20098JN.dwg PLOT: December 03, 2020 at 3:59pm Micki Minsch

DESIGN MSM
DRAWN MSM
CHECK JMP
APPROVED JMP
FILE:

No.	DATE	REVISION	BY	APRVD.

DELTA DRIVE SUBDIVISION

DELTA JUNCTION, AK

BICKNELL INC. QUALITY CONSTRUCTION

STATE OF ALASKA 49TH Joseph M. Pusich CE 8152 REGISTERED PROFESSIONAL ENGINEER 12/03/20

PDC ENGINEERS
PLAN • DESIGN • CONSTRUCT
A BESPEC COMPANY
3000 Denali Drive, Suite 1, Fairbanks, AK 99709
907.780.6060 | AECC605

WATER METER ENCLOSURE DETAILS

DATE: Dec 03, 2020
PDC No. 20098JN

SHEET C206

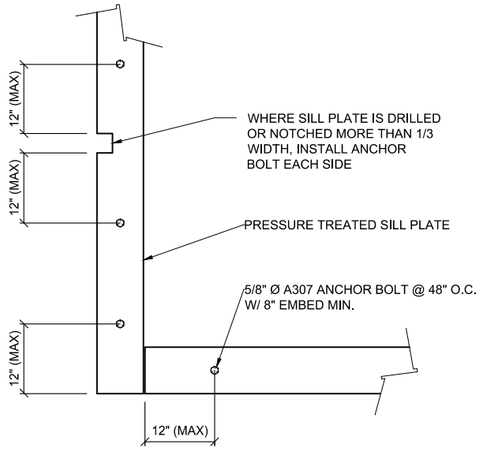

PLAN VIEW

1 C207 SILL PLATE BOLTING TO CONCRETE
SCALE: NTS

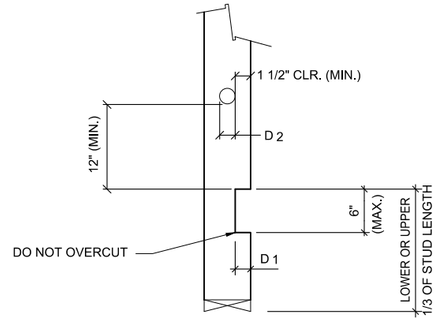

BEARING WALLS		
STUD SIZE	MAX. D 1 (NOTCH)	MAX. D 2 (HOLE)
2x6	1 1/4"	1 1/2"

2 C207 ALLOWABLE HOLES AND NOTCHES IN STUDS
SCALE: NTS

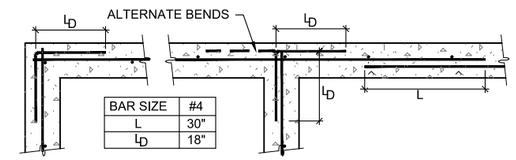

BAR SIZE	#4
L	30"
LD	18"

SINGLE CURTAIN @ STEM WALLS

3 C207 WALL & FOOTING REINFORCING AT CORNERS & INTERSECTIONS
SCALE: NTS

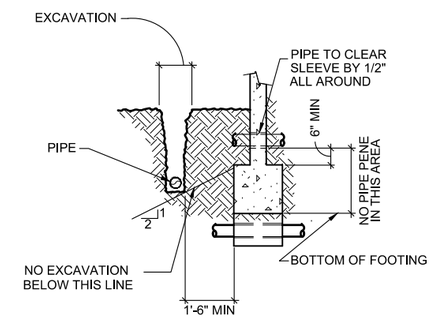

FOOTING SECTION

4 C207 PIPES & TRENCHES AT FOUNDATIONS
SCALE: NTS

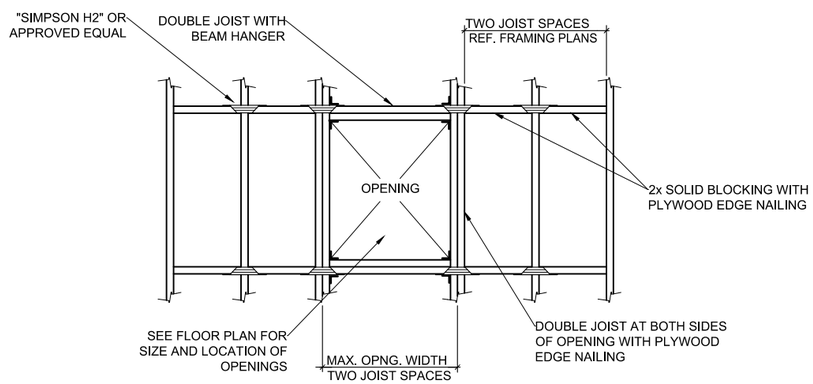

5 C207 TYP. OPENINGS IN FLOORS AND ROOF
SCALE: NTS

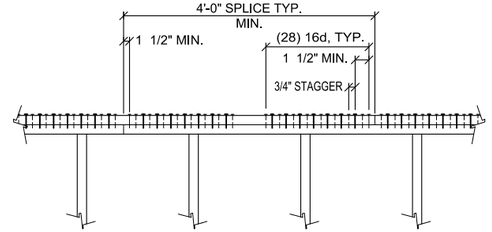

NAILED SPLICE

NOTES:

1. MINIMUM PLATE SPLICE IS (28) 16d EA. SIDE OF EA. PLATE JOINT. MSTC78 IS ALTERNATE.
2. STAGGER NAILS IN 2 ROWS.
3. OCCURS AT TOP PLATES UNDER ROOF.

6 C207 TYPICAL PLATE SPICE
SCALE: NTS

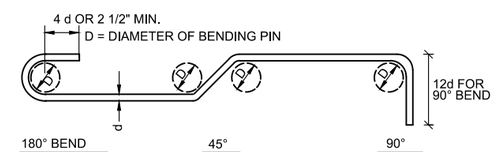

BAR SIZE	MIN. PIN DIA.
#3 THRU #8	6 BAR DIA.

LEGEND (FOR REINF. BENDS NOT SHOWN TO SCALE)

- DENOTES 90° BEND IN THE PLANE OF THE DWG.
- DENOTES 90° BEND PERPENDICULAR TO THE PLANE OF THE DWG.
- DENOTES BEND PERPENDICULAR TO THE PLANE OF THE DWG.
- DENOTES BEND IN THE PLANE OF THE DWG.
- DENOTES OFFSET IN THE PLANE OF THE DWG.

7 C207 STANDARD HOOKS AND BENDS
SCALE: NTS

P:\2020\20098JN-Bicknell_Delta\CIC2001\cnst20098JN.dwg PLOT: December 03, 2020 at: 3:59pm Micki.Minsch

DESIGN	MSM
DRAWN	MSM
CHECK	JMP
APPROVED	JMP
FILE:	

No.	DATE	REVISION	BY	APRVD.

DELTA DRIVE SUBDIVISION
DELTA JUNCTION, AK

BICKNELL INC. QUALITY CONSTRUCTION

STATE OF ALASKA 49TH Joseph M. Pusich CE 8152 PROFESSIONAL ENGINEER 12/03/20

PDC ENGINEERS
PLAN • DESIGN • CONSTRUCT
A DESPEE COMPANY
907.780.6060 | AECC605

WATER METER ENCLOSURE DETAILS

DATE: Dec 03, 2020
PDC No. 20098JN

SHEET
C207

ESCP LEGEND

STRAW WATTLE

SILT SACK BMP

TEMPORARY ROCK ACCESS

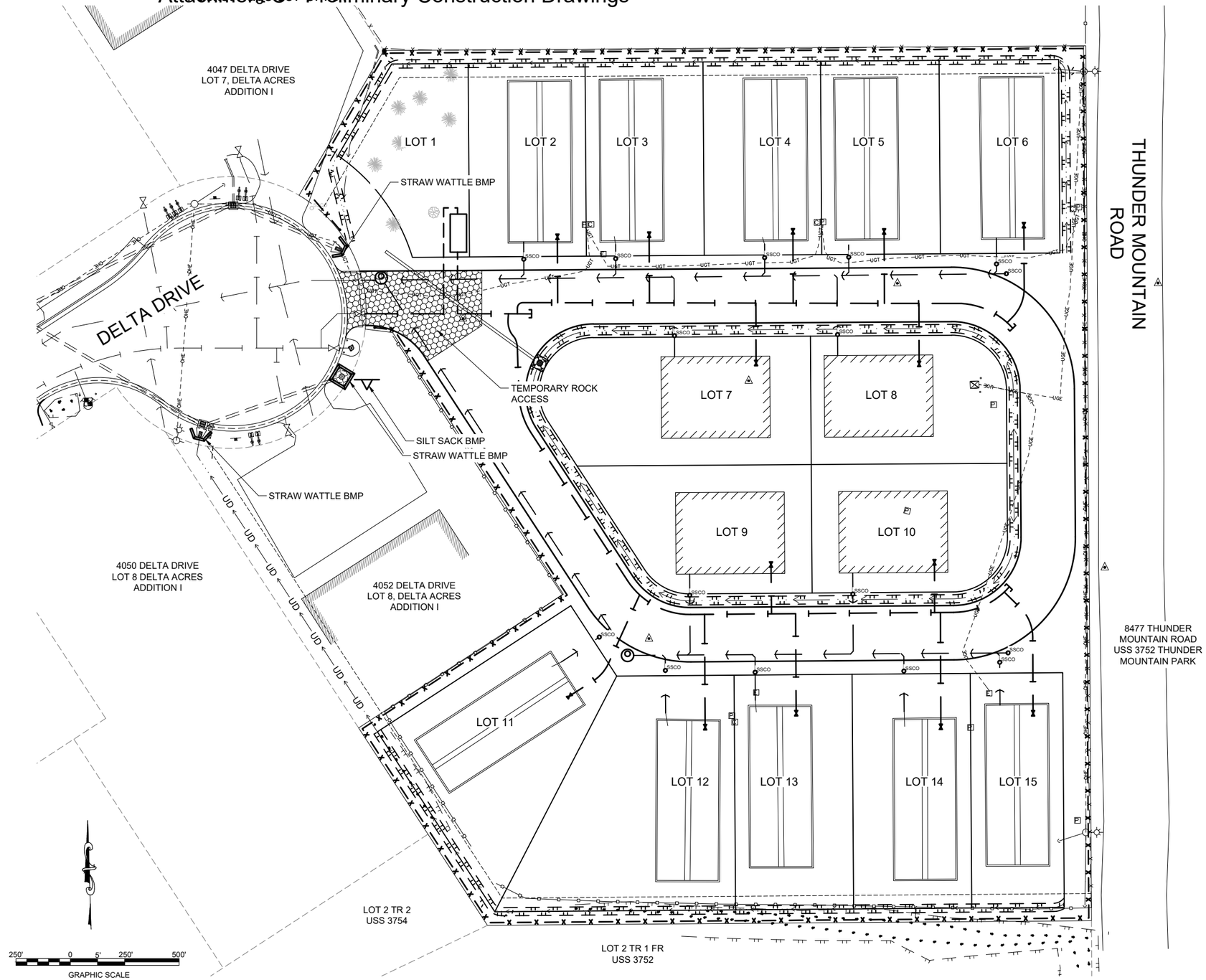

P:\2020\20098JN-Bicknell_Delta\CIC601\ms\20098JN.dwg PLOT: December 03, 2020 at: 4:00pm Micki Minsch

DESIGN	MSM
DRAWN	MSM
CHECK	JMP
APPROVED	JMP
FILE:	

No.	DATE	REVISION	BY	APRVD.

DELTA DRIVE SUBDIVISION

LOT 1 THRU LOT 15

BICKNELL INC. QUALITY CONSTRUCTION

STATE OF ALASKA 49TH Joseph M. Pusich CE 8152 REGISTERED PROFESSIONAL ENGINEER 12/03/20

PDC ENGINEERS
PLAN • DESIGN • CONSTRUCT
A BESPEC COMPANY
907.780.6060 | AECC605

EROSION & SEDIMENT CONTROL PLAN

DATE: Dec 03, 2020
PDC No. 20098JN

SHEET
C300

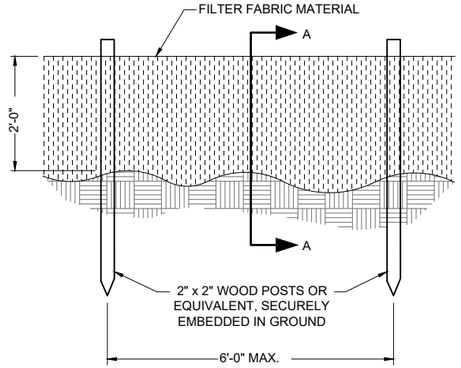

ELEVATION VIEW

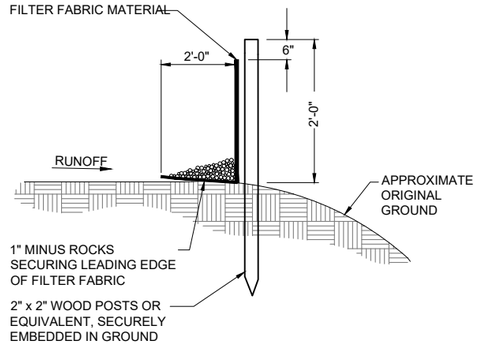

SECTION "A-A"

1 / C301 SILT FENCE DETAIL

SCALE: NTS

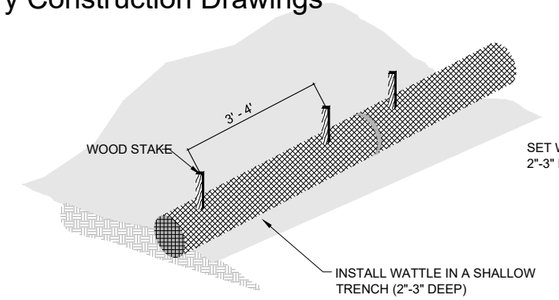

TYPICAL WATTLE ELEVATION VIEW

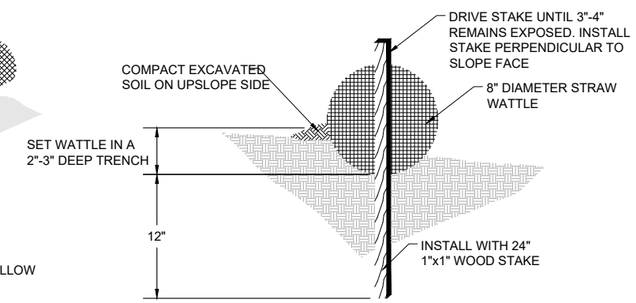

WATTLE ENTRENCHMENT

WATTLE NOTES:

1. BEGIN AT THE LOCATION WHERE THE WATTLE IS TO BE INSTALLED BY EXCAVATING A 2"-3" DEEP x 9" WIDE TRENCH ALONG THE CONTOUR OF THE SLOPE. EXCAVATED SOIL SHOULD BE PLACED UP-SLOPE FROM THE ANCHOR TRENCH.
2. PLACE THE WATTLE IN THE TRENCH SO THAT IT CONTOURS TO THE SOIL SURFACE. COMPACT SOIL FROM THE EXCAVATED TRENCH AGAINST THE WATTLE ON THE UPHILL SIDE. ADJACENT WATTLES SHOULD TIGHTLY ABUT EACH OTHER.
3. SECURE THE WATTLE WITH 24" STAKES EVERY 3-4' AND WITH A STAKE ON EACH END. STAKES SHOULD BE DRIVEN THROUGH THE MIDDLE OF THE WATTLE LEAVING AT LEAST 3-4" OF STAKE EXTENDING ABOVE THE WATTLE. STAKES SHOULD BE DRIVEN PERPENDICULAR TO SLOPE FACE.

2 / C301 STRAW WATTLE IN GROUND DETAIL

SCALE: NTS

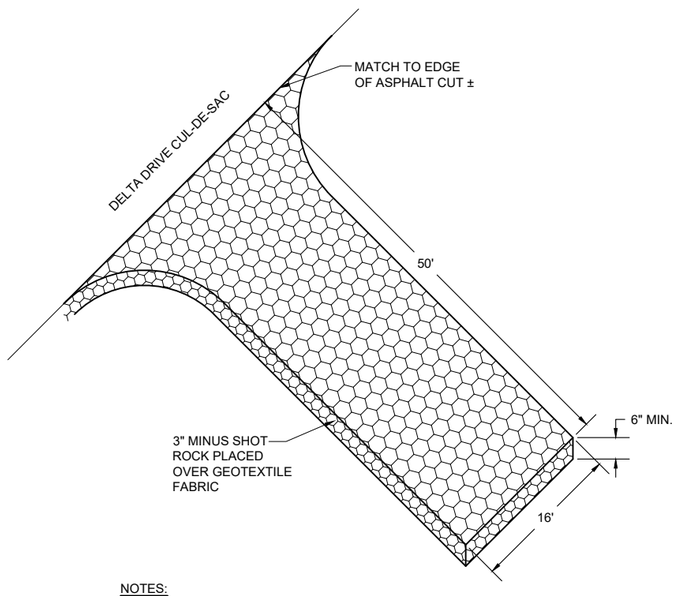

NOTES:

1. MAINTENANCE OF TEMPORARY ROCK ACCESS SHALL INCLUDE REPLACING ROCK AS REQUIRED TO MAINTAIN AN EFFECTIVE AREA FOR SHEDDING EARTHEN MATERIAL FROM CONSTRUCTION EQUIPMENT AND PREVENTING MATERIAL FROM GETTING TRACKED ON TO DELTA DRIVE.
2. CLEAN AND REMOVE ALL TRACKED MATERIAL (MUD, SILT, DEBRIS, ETC.) OFF OF THE PROJECT SITE DAILY AND DISPOSE OF MATERIAL AT AN APPROVED DISPOSAL LOCATION.
3. TEMPORARY ROCK ACCESS APPROACHES SHALL BE INSTALLED AS SHOWN ON THE EROSION AND SEDIMENT CONTROL PLAN OR AS DIRECTED BY THE ENGINEER.

3 / C301 TEMPORARY ROCK ACCESS

SCALE: NTS

EROSION AND SEDIMENT CONTROL NOTES:

1. EROSION AND SEDIMENT CONTROL PLANS (E.S.C.P.) SHOWN ARE INTENDED AS A MINIMUM LEVEL OF EROSION CONTROL ONLY. THE E.S.C.P. IS TO BE USED BY THE CONTRACTOR TO DEVELOP A SITE SPECIFIC STORM WATER POLLUTION PREVENTION PLAN (SWPPP). ALL SEDIMENTATION FROM ON SITE DRAINAGE AND GRADING SHALL BE CONTAINED ON SITE. THE CONTRACTOR IS SOLELY RESPONSIBLE FOR DAMAGE TO ADJACENT PROPERTIES AND STREAMS FROM CONSTRUCTION RELATED EROSION AND SILTATION DURING THE COURSE OF WORK. ANY DAMAGE RESULTING FROM SUCH EROSION AND SILTATION SHALL BE CORRECTED AT THE EXPENSE OF THE CONTRACTOR.
2. ALL EROSION CONTROL/SEDIMENTATION CONTROL BARRIERS SHALL BE IN PLACE PRIOR TO COMMENCING EXCAVATION OR FILLING OPERATIONS.
3. TEMPORARY EROSION CONTROL SYSTEM WILL NOT BE REMOVED UNTIL GERMINATION OF SEEDING AND NO EROSION/SEDIMENT PROBLEMS EXIST.
4. COLLECTED SEDIMENT WILL BE DISPOSED OF OFF SITE AT AN EXISTING APPROVED DUMPSITE. COLLECTED SEDIMENT MAY NOT BE USED AS EMBANKMENT.
5. DEWATERING OF WORK AREAS BY PUMPING SHALL BE IMPLEMENTED TO REDUCE THE PROJECTS WATER QUALITY IMPACTS. THE PUMP DISCHARGE NEEDS TO BE FILTERED THROUGH SEDIMENT CONTROL DEVICES SUCH AS "DIRTBAG" OR SEDIMENT CONTROL STRUCTURES BEFORE IT CAN ENTER FISH HABITATS AT ANY POINT.
6. CONTRACTOR SHALL KEEP CLEAN AND DISPOSE OF ALL EARTHEN MATERIAL TRACKED ONTO DELTA DRIVE. THIS SHALL INCLUDE SWEEPING WITH POWER BROOM, VACUUMING AND WATERING ON A DAILY BASIS DURING HAULING ACTIVITY OR MORE FREQUENTLY AS DIRECTED BY THE ENGINEER.

P:\2020\20098JN-Bicknell_Delta\C\C600\cns\20098JN.dwg PLOT: December 03, 2020 at: 4:00pm Micki.Minsch

DESIGN MSM
DRAWN MSM
CHECK JMP
APPROVED JMP
FILE:

No.	DATE	REVISION	BY	APRVD.

DELTA DRIVE SUBDIVISION

BICKNELL INC.

STATE OF ALASKA 49TH Joseph M. Pusich CE 8152 12/03/20

PDC ENGINEERS
PLAN • DESIGN • CONSTRUCT
A DESPEE COMPANY
907.780.6060 | AECC605

EROSION & SEDIMENT CONTROL DETAILS

DATE: Dec 03, 2020
PDC No. 20098JN

SHEET C301

PDC ENGINEERS

PLAN DESIGN CONSTRUCT

TECHNICAL MEMORANDUM

Client #	Bicknell Inc.	**Date**	10/2/2020
PDC #	20098JN	**Prepared by**	Sean Kelly, EIT
Project Name	Delta Drive Subdivision	**Reviewed by**	Mark Pusich, PE
Subject	Delta Drive Subdivision – Water Main Branch Sizing Memo		

Topic	Discussion
Introduction	Bicknell Inc. is the owner of Delta Drive subdivision and is proposing the replacement of a water main servicing the subdivisions lots. The subdivision includes 15 lots, 14 of which will have single family structures installed on the lots. The proposed water main installation will involve connecting a water submain off of the new 8" HDPE water line.
Existing Conditions	The existing subdivision includes 10 modular homes on concrete foundations with buildings previously removed. The inner island of the subdivision has four lots that have been recently cleared. The existing homes were served with ¾" water lines from the 2" main.
Peak Design Flow	The Delta Drive Subdivision is not a new development and is residential, so the flow design is straight forward. Testing data from the CBJ fire hydrant located at the cul-de-sac entrance of the subdivision was provided by the CBJ Water Department. Fixture count and pipe sizes were determined with the 2012 Uniform Plumbing Code, IAPMO/ANSI UPC1-2012.
Assumptions	For the design of the water main servicing the Delta Drive Subdivision several assumptions were made. The following are the assumptions made for this design: • Each home has two bathrooms which include shower with tub, sink and toilet. • Each home has a washing machine. • Each home has one hose bib. • Each home has a kitchen sink.
Fixture Count & Pipe Sizing	From the 2012 Uniform Plumbing Code, the following fixture counts (FC) were obtained from table 610.3 (attached) for private units:

Topic	Discussion
	• Lavatory (x2) – 2.0 FC • Water Closet, 1.6 GPF Gravity Tank (x2) – 5.0 FC • Bathtub or Combination Bath/Shower (x2) – 8.0 FC • Clothes Washer – 4.0 FC • Kitchen, domestic with or without dishwasher – 1.5 FC • Hose Bibb – 2.5 These fixtures bring the total fixture count per residential unit to 23 FC. The available static pressure is 64 psi, provided by CBJ, at Delta Drive fire hydrant. The longest line necessary from the tee off of the 8" line is 250'. Due to the configuration of the water main having two branches off of the 8" water main, the total fixture count is determined with seven units instead of the total 14. Total fixture count (TFC) for seven units is as follows, $$TFC = \left(\frac{23\ FC}{UNIT}\right) * 7\ UNITS = 161\ FC$$
Design Recommendation	Using Table 610.4 from the 2012 Uniform Plumbing Code (attached), the minimum pipe size for the water branches is two-inch pipe. It is recommended that two-inch pipe be used for the water main servicing the Delta Drive Subdivision.

TABLE 610.3
WATER SUPPLY FIXTURE UNITS (WSFU) AND MINIMUM FIXTURE BRANCH PIPE SIZES[3]

APPLIANCES, APPURTENANCES OR FIXTURES[2]	MINIMUM FIXTURE BRANCH PIPE SIZE[1,4] (Inches)	PRIVATE	PUBLIC	ASSEMBLY[6]
Bathtub or Combination Bath/Shower (fill)	½	4.0	4.0	—
¾ inch Bathtub Fill Valve	¾	10.0	10.0	—
Bidet	½	1.0	—	—
Clothes Washer	½	4.0	4.0	—
Dental Unit, cuspidor	½	—	1.0	—
Dishwasher, domestic	½	1.5	1.5	—
Drinking Fountain or Water Cooler	½	0.5	0.5	0.75
Hose Bibb	½	2.5	2.5	—
Hose Bibb, each additional[8]	½	1.0	1.0	—
Lavatory	½	1.0	1.0	1.0
Lawn Sprinkler, each head[5]	—	1.0	1.0	—
Mobile Home, each (minimum)	—	12.0	—	—
Sinks	—	—	—	—
Bar	½	1.0	2.0	—
Clinic Faucet	½	—	3.0	—
Clinic Flushometer Valve with or without faucet	1	—	8.0	—
Kitchen, domestic with or without dishwasher	½	1.5	1.5	—
Laundry	½	1.5	1.5	—
Service or Mop Basin	½	1.5	3.0	—
Washup, each set of faucets	½	—	2.0	—
Shower, per head	½	2.0	2.0	—
Urinal, 1.0 GPF Flushometer Valve	¾	See Footnote[7]		—
Urinal, greater than 1.0 GPF Flushometer Valve	¾	See Footnote[7]		—
Urinal, flush tank	½	2.0	2.0	3.0
Wash Fountain, circular spray	¾	—	4.0	—
Water Closet, 1.6 GPF Gravity Tank	½	2.5	2.5	3.5
Water Closet, 1.6 GPF Flushometer Tank	½	2.5	2.5	3.5
Water Closet, 1.6 GPF Flushometer Valve	1	See Footnote[7]		—
Water Closet, greater than 1.6 GPF Gravity Tank	½	3.0	5.5	7.0
Water Closet, greater than 1.6 GPF Flushometer Valve	1	See Footnote[7]		—

For SI units: 1 inch = 25 mm

Notes:

1 Size of the cold branch pipe, or both the hot and cold branch pipes.

2 Appliances, appurtenances, or fixtures not referenced in this table shall be permitted to be sized by reference to fixtures having a similar flow rate and frequency of use.

3 The listed fixture unit values represent their load on the cold water building supply. The separate cold water and hot water fixture unit value for fixtures having both hot and cold water connections shall be permitted to be each taken as three-quarter of the listed total value of the fixture.

4 The listed minimum supply branch pipe sizes for individual fixtures are the nominal (I.D.) pipe size.

5 For fixtures or supply connections likely to impose continuous flow demands, determine the required flow in gallons per minute (gpm) (L/s), and add it separately to the demand in gpm (L/s) for the distribution system or portions thereof.

6 Assembly [Public Use (See Table 422.1)].

7 Where sizing flushometer systems, see Section 610.10.

8 Reduced fixture unit loading for additional hose bibbs is to be used where sizing total building demand and for pipe sizing where more than one hose bibb is supplied by a segment of water distribution pipe. The fixture branch to each hose bibb shall be sized on the basis of 2.5 fixture units.

TABLE 610.4
FIXTURE UNIT TABLE FOR DETERMINING WATER PIPE AND METER SIZES

METER AND STREET SERVICE (Inches)	BUILDING SUPPLY AND BRANCHES (Inches)	MAXIMUM ALLOWABLE LENGTH (feet)														
		40	60	80	100	150	200	250	300	400	500	600	700	800	900	1000
PRESSURE RANGE – 30 to 45 psi[1]																
¾	½[2]	6	5	4	3	2	1	1	1	0	0	0	0	0	0	0
¾	¾	16	16	14	12	9	6	5	5	4	4	3	2	2	2	1
¾	1	29	25	23	21	17	15	13	12	10	8	6	6	6	6	6
1	1	36	31	27	25	20	17	15	13	12	10	8	6	6	6	6
¾	1¼	36	33	31	28	24	23	21	19	17	16	13	12	12	11	11
1	1¼	54	47	42	38	32	28	25	23	19	17	14	12	12	11	11
1½	1¼	78	68	57	48	38	32	28	25	21	18	15	12	12	11	11
1	1½	85	84	79	65	56	48	43	38	32	28	26	22	21	20	20
1½	1½	150	124	105	91	70	57	49	45	36	31	26	23	21	20	20
2	1½	151	129	129	110	80	64	53	46	38	32	27	23	21	20	20
1	2	85	85	85	85	85	85	82	80	66	61	57	52	49	46	43
1½	2	220	205	190	176	155	138	127	120	104	85	70	61	57	54	51
2	2	370	327	292	265	217	185	164	147	124	96	70	61	57	54	51
2	2½	445	418	390	370	330	300	280	265	240	220	198	175	158	143	133
PRESSURE RANGE – 46 to 60 psi[1]																
¾	½[2]	7	7	6	5	4	3	2	2	1	1	1	0	0	0	0
¾	¾	20	20	19	17	14	11	9	8	6	5	4	4	3	3	3
¾	1	39	39	36	33	28	23	21	19	17	14	12	10	9	8	8
1	1	39	39	39	36	30	25	23	20	18	15	12	10	9	8	8
¾	1¼	39	39	39	39	39	39	34	32	27	25	22	19	19	17	16
1	1¼	78	78	76	67	52	44	39	36	30	27	24	20	19	17	16
1½	1¼	78	78	78	78	66	52	44	39	33	29	24	20	19	17	16
1	1½	85	85	85	85	85	85	80	67	55	49	41	37	34	32	30
1½	1½	151	151	151	151	128	105	90	78	62	52	42	38	35	32	30
2	1½	151	151	151	151	150	117	98	84	67	55	42	38	35	32	30
1	2	85	85	85	85	85	85	85	85	85	85	85	85	85	83	80
1½	2	370	370	340	318	272	240	220	198	170	150	135	123	110	102	94
2	2	370	370	370	370	368	318	280	250	205	165	142	123	110	102	94
2	2½	654	640	610	580	535	500	470	440	400	365	335	315	285	267	250
PRESSURE RANGE – Over 60 psi[1]																
¾	½[2]	7	7	7	6	5	4	3	3	2	1	1	1	1	1	0
¾	¾	20	20	20	20	17	13	11	10	8	7	6	6	5	4	4
¾	1	39	39	39	39	35	30	27	24	21	17	14	13	12	12	11
1	1	39	39	39	39	38	32	29	26	22	18	14	13	12	12	11
¾	1¼	39	39	39	39	39	39	39	39	34	28	26	25	23	22	21
1	1¼	78	78	78	78	74	62	53	47	39	31	26	25	23	22	21
1½	1¼	78	78	78	78	78	74	65	54	43	34	26	25	23	22	21
1	1½	85	85	85	85	85	85	85	85	81	64	51	48	46	43	40
1½	1½	151	151	151	151	151	151	130	113	88	73	51	51	46	43	40
2	1½	151	151	151	151	151	151	142	122	98	82	64	51	46	43	40
1	2	85	85	85	85	85	85	85	85	85	85	85	85	85	85	85
1½	2	370	370	370	370	360	335	305	282	244	212	187	172	153	141	129
2	2	370	370	370	370	370	370	370	340	288	245	204	172	153	141	129
2	2½	654	654	654	654	654	650	610	570	510	460	430	404	380	356	329

For SI units: 1 inch = 25 mm, 1 foot = 304.8 mm, 1 pound-force per square inch = 6.8947 kPa

Notes:

[1] Available static pressure after head loss.

[2] Building supply, not less than ¾ of an inch (20 mm) nominal size.

From: Loni VanKirk <Loni.VanKirk@juneau.org>
Sent: Monday, September 28, 2020 8:18 AM
To: Kevin Puustinen <KevinPuustinen@pdceng.com>
Subject: RE: Hydrant Test Data - Delta Drive

CAUTION: This email originated from outside of the organization. Exercise caution when viewing attachments, clicking links, or responding to requests.

ACROSS FROM 4045 DELTA DR.	MUELLER	WET	64	1110/48	8/13/2019

Kevin,

Here is the Data you requested.

Static PSI Flow/residual PSI

Loni Van Kirk
Distribution Senior Operator
CBJ Water Utility
907-723-4975

From: Kevin Puustinen <KevinPuustinen@pdceng.com>
Sent: Wednesday, September 23, 2020 10:06 AM
To: Loni VanKirk <Loni.VanKirk@juneau.org>
Subject: Hydrant Test Data - Delta Drive

EXTERNAL E-MAIL: BE CAUTIOUS WHEN OPENING FILES OR FOLLOWING LINKS

Hi Loni – Can you please send me your most recent test data for the hydrant in the cul-de-sac on Delta Drive?

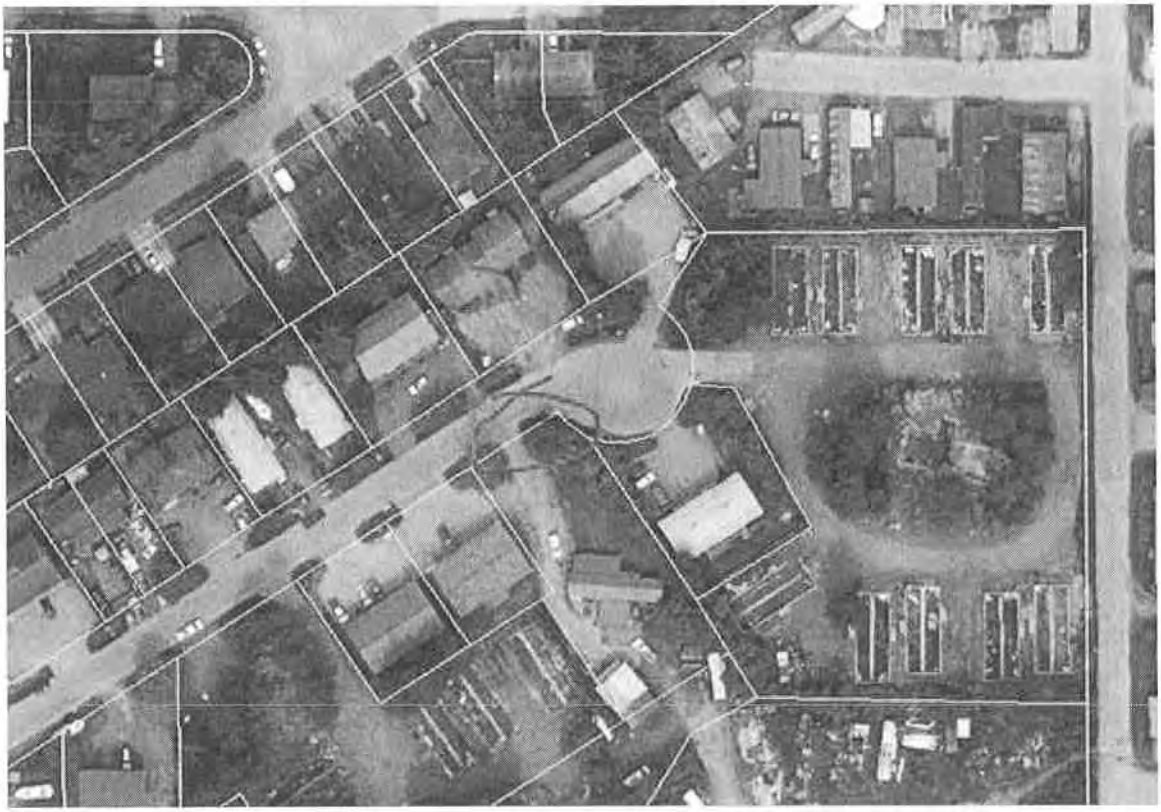

Thanks,

Kevin Puustinen, PE
Civil Engineer

PDC ENGINEERS
A RESPEC COMPANY

9109 Mendenhall Mall Rd. Ste 4, Juneau, Alaska 99801 | 907.780.6060
Facebook | LinkedIn | Twitter | www.pdceng.com

Transforming Challenges into Solutions

Anchorage | Fairbanks | Juneau | Palmer | Soldotna

Confidentiality Notice: This E-mail and any attachments is covered by the Electronic Communications Privacy Act, 18 U.S.C. & 2510-2524, is confidential and may be legally privileged. If you are not the intended recipient, you are hereby notified that any retention, dissemination, or copying of this communication is strictly prohibited. Please reply to the sender that you have received the message in error, and permanently delete the original and destroy any copy, including printed copies of this email and any attachments thereto.

DRAINAGE REPORT
FOR
DELTA DRIVE SUBDIVISION
JUNEAU, ALASKA

Prepared For:

Bicknell Development
2275 Brandy Lane, Suite 1
Juneau, AK 99801

Prepared By:

PDC Engineers
9109 Mendenhall Mall Road Suite 4
Juneau, AK 99801

Date: November 20, 2020
PDC Project No. 20098JN

1.0 PROJECT OVERVIEW

1.1 Project Description

Bicknell Inc., is proposing to redevelop an existing residential property. The project is located off the cul-de-sac at the end of Delta Drive. The property previously had 10 double wide mobile homes and a structure in the center of the property. The mobile homes and the center structure have been removed and the mobile home concrete foundations remain. The property has been divided into 15 lots. Lot 1 is the parent lot, lots 2 through 6 make up the northern lots. The center of the property has been divided into four lots to create lots 7 through 10. Lots 11 through 15 make up the southern lots.

1.2 Project Duration

The developer (Bicknell) will begin construction in the spring of 2021. The subdivision development is anticipated to occur over a period of approximately 3 months.

2.0 SOIL INFORMATION

Soil conditions present in the project area consists of a vegetated surface layer underlain by a soil matrix of sand, gravels and silt material. The ground water is located approximately 3 feet below the surface as confirmed by excavated test pits. The project area is fairly flat.

3.0 STORM WATER SYSTEM

Currently drainage leaves the site through a 12” CMP culvert located at the end of Delta Drive on the northeast side of the cul-de-sac.

The storm water system along Delta Drive has been proposed to be upgraded per CBJ Contract BE21-028 “Delta Drive Reconstruction.” Work is scheduled for spring/summer 2021. For the purpose of this report, the proposed culverts for Delta Drive Reconstruction were used for the analysis of the Delta Drive Subdivision project site.

Drainage from the proposed Delta Drive Subdivision project site will be discharged into the Delta Drive storm water system at three locations, the 12” CPP ditch culvert (Pipe P-1) on the northeast side of the Delta Drive cul-de-sac, the 12” CPP culvert (Pipe P-3) at the area drain on the southeast side of the cul-de-sac, and a 12” CPP ditch culvert (Pipe P-4) located on the southwestern side of the cul-de-sac where it meets the 10’ drainage easement.

A drainage swale along the northern perimeter of the proposed project area will be

graded at 1.0% from the east to the west to then discharge in to Pipe P-1 at the northeast side of the Delta Drive cul-de-sac. Drainage from the swale around lots 7 through 10 will drain into a Type III catch basin where it will then flow through a 12" CPP pipe (Pipe P-2) to a ditch where it will leave the site through Pipe P-1 at the northeast side of the Delta Drive cul-de-sac.

A drainage swale along the southern perimeter of the proposed project area will be graded at 1.0% from east to west to an underdrain that runs along a 10' drainage easement to Pipe P-4 at the southwestern side of the Delta Drive cul-de-sac.

All of the discharge from the site would then meet at a catch basin on Delta Drive where it will be discharge through an 18" CPP culvert (Pipe P-5) to continue through the storm system.

Storm drain structures and piping would follow CBJ Standard Specifications and Standard Drawings for the development.

3.0 SITE RUNOFF CALCULATION METHOD:

A total of four catchment areas were analyzed representing the existing and proposed drainage conveyance systems relevant to the project. The catchment areas include: The existing 12" CPP culvert (Pipe P-1) that is located at the northeastern side of the Delta Drive cul-de-sac, the proposed 12" CPP culvert (Pipe P-2) that is located on the project site near the entrance to the subdivision, the existing 12" CPP culvert (Pipe P-3) that is located on the southeastern edge of the cul-de-sac, and the existing 12" CPP culvert (Pipe P-4) at the southwestern end of the cul-de-sac.

The catchment areas were determined using the proposed design model. A delineation of the areas can be found in Appendix A.

To calculate the site runoff we have elected to use the Rational Method. The Rational Method is most appropriate for evaluating drainage basins less than 10 acres. Appendix D of the "2010 CBJ Manual of Storm Water Best Management Practices" was utilized as a guide. The calculations and supporting documentation can be found in Appendix B, C, D & E of this report.

3.1 Anticipated Site Runoff (Q):

Using the Rational Method, the amount of stormwater runoff during the 25-year storm event per catchment area was determined. See Table 1.1 for results, the calculations can be found in Appendix B.

Table 1.1 Anticipated Site Runoff (Q):	
Catchment Area	**Q (cfs)**
Pipe P-1	1.03
Pipe P-2	0.94
Pipe P-3	0.42
Pipe P-4	0.74

3.2 Conveyance/Discharge Structure Capacities:

The capacity of the existing and proposed drainage systems was calculated using the Manning's Equation to determine if proposed 25-year storm even flows could be conveyed. See Table 1.2 below for results, calculations can be found in Appendix B.

Table 1.2 Conveyance/Discharge Structure Capacities:	
Catchment Area	**Q (cfs)**
Pipe P-1	2.57
Pipe P-2	2.34
Pipe P-3	2.59
Pipe P-4	14.51
Pipe P-5	6.16

Summary

Table 1.3 below compares anticipated 25-year runoff in the proposed and existing conveyance systems to their available hydraulic capacity.

Table 1.3 Comparison			
Drainage Basin	**Anticipated Runoff Q (cfs)**	**Capacity Check**	**Available Capacity Q (cfs)**
Pipe P-1	1.12	<	2.57
Pipe P-2	0.94	<	2.34
Pipe P-3	0.42	<	2.59
Pipe P-4	0.74	<	14.51
Pipe P-5	3.13	<	6.16

In summary our analysis shows that there is enough capacity in the existing and proposed drainage structures to handle flows from the altered drainage patterns as a result of the proposed Delta Drive Subdivision improvements.

11/20/2020

J. Mark Pusich, P.E.
Principal Civil Engineer
PDC Engineers

Appendices:

A – Catchment Areas
B – Rational Method
C – Runoff Coefficient
D – Time of Concentration
E – Rainfall Intensity
F – Existing & Proposed

Appendix A
Catchment Areas

DELTA DRIVE SUBDIVISION CONSTRUCTION IMPROVEMENT PLAN DRAINAGE MAP

JUNEAU, ALASKA

PREPARED FOR BICKNELL, INC.

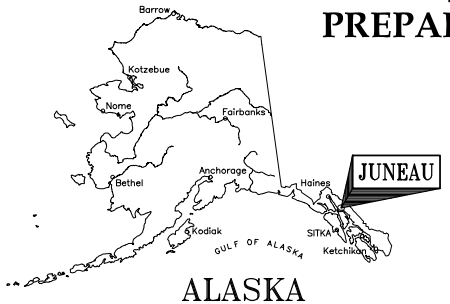

ALASKA

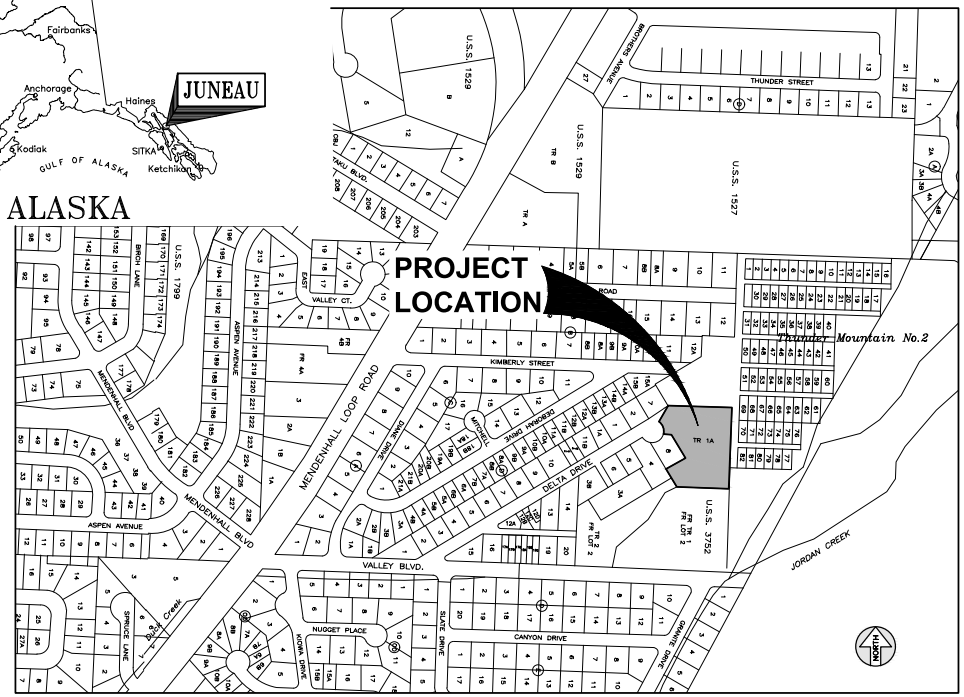

PROJECT LOCATION MAP

500' 0 250' 500' 1000'
GRAPHIC SCALE

SHEET INDEX

SHEET No.	DESCRIPTION
1	COVER SHEET
2	P-1: EXISTING 12" CPP CULVERT
3	P-2: PROPOSED 12" CPP CULVERT
4	P-3: EXISTING 12" CPP CULVERT
5	P-4: EXISTING 12" CPP CULVERT

P:\2020\2009UNI\Bicknell_Delta\CDrainage Map.dwg PLOT: November 20, 2020 in: 10.dwg

DESIGN XXX
DRAWN XXX
CHECK JMP
APPROVED JMP
FILE:

No.	DATE	REVISION	BY	APRVD.

DELTA DRIVE SUBDIVISION
JUNEAU, AK

PDC ENGINEERS
PLAN • DESIGN • CONSTRUCT
A 聚英企业集 COMPANY
9109 Mendenhall Mall Rd. Ste. 4, Juneau, AK 99801
907.780.6060 | AECC605

COVER SHEET

DATE: Nov 20, 2020
PDC No. 2009UNI
SHEET 1

DESIGN XXX
DRAWN XXX
CHECK JMP
APPROVED JMP
FILE

No	DATE	REVISION	BY	APRV'D

DELTA DRIVE
SUBDIVISION
JUNEAU, AK

PDC ENGINEERS
PLAN • DESIGN • CONSTRUCT
A E S P E C E S B R A N A N T
9 0 7 8 8 0 . 6 0 6 0 | A E C C 6 0 3

P-1: EXISTING 12" CPP
CULVERT CATCHMENT AREA

DATE Nov 20, 2020
PDC No 2020-0001
SHEET 2

DESIGN XXX
DRAWN XXX
CHECK JMP
APPROVED JMP
FILE

No	DATE	REVISION	BY	APPRO

DELTA DRIVE SUBDIVISION
JUNEAU, AK

PDC ENGINEERS
PLAN • DESIGN • CONSTRUCT
9101 Mendenhall Mall Rd, Suite A, Juneau, AK 99801
907.780.6060 | AECOM

P-2: PROPOSED 12" CPP CULVERT CATCHMENT AREA

DATE Nov 20, 2020
PDC No 2020-0001
SHEET 3

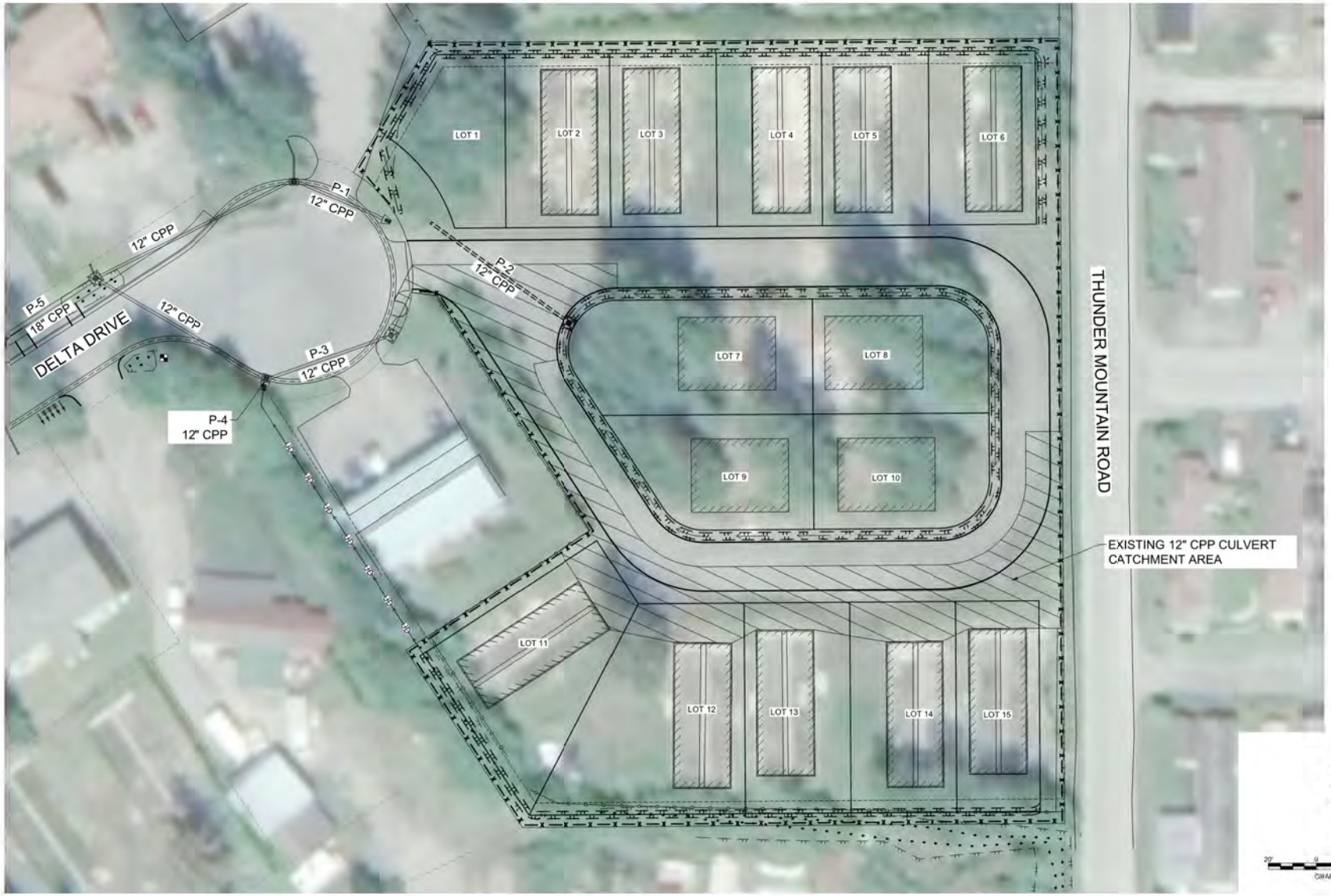

DESIGN XXX
DRAWN XXX
CHECK JMP
APPROVED JMP
FILE

No.	DATE	REVISION	BY	APRVD.

DELTA DRIVE
SUBDIVISION

JUNEAU, AK

PDC ENGINEERS
PLAN • DESIGN • CONSTRUCT
A BESPEC COMPANY
9109 Mendenhall Mall Rd. Ste. 4, Juneau, AK 99801
907.780.6060 | AECC605

P-3: EXISTING 12" CPP
CULVERT CATCHMENT AREA

DATE Nov 20, 20
PDC No 2009
SHEET 4

DESIGN XXX
DRAWN XXX
CHECK JMP
APPROVED JMP
FILE

No	DATE	REVISION	BY	APPRO

DELTA DRIVE
SUBDIVISION
JUNEAU, AK

PDC ENGINEERS
PLAN • DESIGN • CONSTRUCT
INTEGRITY • EXPERIENCE • SERVICE
9101 Mendenhall Mall Rd, Suite A, Juneau, AK 99801
907.780.6060 | AECC603

P-4: EXISTING 12" CPP
CULVERT CATCHMENT AREA

DATE Nov 20, 2020
PDC No 2020-0001
SHEET 5

Appendix B
Rational Method

Rational Method Site Runoff Pipe P-1: Existing 12" CPP		
Project:	Delta Drive Subdivision	PDC ENGINEERS PLAN • DESIGN • CONSTRUCT A RESPEC COMPANY 9109 Mendenhall Mall Rd, Ste. 4, Juneau, AK 99801 907.780.6060 | AECC605
Owner:	Bicknell Inc.	
Date:	11/19/2020	
Prepared By:	M. Minsch	
Checked By:	M. Pusich	

$$\boldsymbol{Q = CIA}$$

Q= peak flow in cubic feet per second (cfs)
C = runoff coefficient
I = rainfall intensity (inches per hour)
A = catchment area (acres)

$$\boldsymbol{C_c = (C_1A_1 + C_2A_2)/A_t}$$

$C_c = composite\ runoff\ coefficient$
$C_{1,2} = runoff\ coefficient\ for\ each\ area\ land\ cover\ type$
$A_t = total\ area\ (acres)$
$A_{1,2} = areas\ of\ land\ cover\ (acres)$
$C_c = 0.84, see\ Appendix\ C\ for\ calculation$

$$\boldsymbol{T_c = T_1 + T_2 + \cdots + T_n}$$

$T_c = time\ of\ concentration\ (min)$
$T_{1,2} = travel\ time\ across\ separate\ flow\ path\ segments$ (min)
$T_c = 13.10\ min, see\ Appendix\ D\ for\ calculaton$

$$\boldsymbol{T_t = L/60V}$$

$T_t = travel\ time\ (min)$
$L = the\ distance\ of\ flow\ across\ a\ given\ segment\ (feet)$
$V = k_r\sqrt{S_0} = average\ velocity\ \left(\frac{feet}{\sec}\right) across\ land\ cover$
$k_r = time\ of\ concentration\ velocity\ factor\ (CBJ\ Manual\ of\ Storm\ Water\ BMP\ 2010, Table\ D-5, PG.D-10)$
$S_0 = slope\ of\ flow\ path\ (\frac{feet}{feet})$

Per CBJ Manual of Storm Water BMP 2010, Table 5-1, page 5-1, design event frequencies are specified. For driveway culvert, a 25-year storm event is the required design return period. We will base our analysis on a 25-year design return period for all drainage structures and catchment areas. Per CBJ Manual of Storm Water BMP 2010, page D-9, basins with a time and concentration 10 minutes or less shall use the 10 minute intensity. Basins with a time of concentration greater than 10 minutes and less than 30 minutes shall interpolate between the 10 and 30 minute values. Rainfall intensity for the site was sourced from the NOAA Atlas 14, Point Precipitation Frequency Estimates, see Appendix E, and is summarized as follows:

	Design Return Period
Tc 13.10 (min)	25-year
Interpolated Intensity (in/hr)=	**2.03**

Pipe P-1 is an existing 12" CPP culvert on the northeast side of the Delta Drive cul-de-sac that drains into the Delta Drive storm system at the location where the new subdivision access will tie into the shoulder of the cul-de-sac. The area that is proposed to contribute runoff to this culvert was delineated in AutoCAD.

A=26270 sqft/43,560 = 0.60 acres

	C_c	I	A		
Q (cfs)=	0.84	2.03	0.60	=	**1.03**

Rational Method Site Runoff Pipe P-2: Proposed 12" CPP		
Project:	Delta Drive Subdivision	PDC ENGINEERS PLAN • DESIGN • CONSTRUCT A RESPEC COMPANY 9109 Mendenhall Mall Rd. Ste. 4, Juneau, AK 99801 907.780.6060 | AECC605
Owner:	Bicknell Inc.	
Date:	11/19/2020	
Prepared By:	M. Minsch	
Checked By:	M. Pusich	

$$\boldsymbol{Q = CIA}$$

Q= peak flow in cubic feet per second (cfs)
C = runoff coefficient
I = rainfall intensity (inches per hour)
A = catchment area (acres)

$$\boldsymbol{C_c = (C_1A_1 + C_2A_2)/A_t}$$

$C_c = composite\ runoff\ coefficient$
$C_{1,2} = runoff\ coefficient\ for\ each\ area\ land\ cover\ type$
$A_t = total\ area\ (acres)$
$A_{1,2} = areas\ of\ land\ cover\ (acres)$
$C_c = 0.84, \quad see\ Appendix\ C\ for\ calculation$

$$\boldsymbol{T_c = T_1 + T_2 + \cdots + T_n}$$

$T_c = time\ of\ concentration\ (min)$
$T_{1,2} = travel\ time\ across\ separate\ flow\ path\ segments$ (min)
$T_c = 11.27\ min, see\ Appendix\ D\ for\ calculaton$

$$\boldsymbol{T_t = L/60V}$$

$T_t = travel\ time\ (min)$
$L = the\ distance\ of\ flow\ across\ a\ given\ segment\ (feet)$
$V = k_r\sqrt{S_0} = average\ velocity\ \left(\frac{feet}{\sec}\right) across\ land\ cover$
$k_r = time\ of\ concentration\ velocity\ factor\ (CBJ\ Manual\ of\ Storm\ Water\ BMP\ 2010, Table\ D-5, PG.D-10)$
$S_0 = slope\ of\ flow\ path\ (\frac{feet}{feet})$

Per CBJ Manual of Storm Water BMP 2010, Table 5-1, page 5-1, design event frequencies are specified. For driveway culvert, a 25-year storm event is the required design return period. We will base our analysis on a 25-year design return period for all drainage structures and catchment areas. Per CBJ Manual of Storm Water BMP 2010, page D-9, basins with a time and concentration 10 minutes or less shall use the 10 minute intensity. Basins with a time of concentration greater than 10 minutes and less than 30 minutes shall interpolate between the 10 and 30 minute values. Rainfall intensity for the site was sourced from the NOAA Atlas 14, Point Precipitation Frequency Estimates, see Appendix E, and is summarized as follows:

	Design Return Period
Tc 11.27 (min)	25-year
Interpolated Intensity (in/hr)=	**2.22**

P-2 is a proposed 12" CPP pipe is being installed to maintain the runoff from part of the subdivision access road and from proposed lots 7 through 10. Runoff will be carried down to a ditch where it will then flow into pipe P-1 and discharge into the Delta Drive storm system. The area that is proposed to contribute runoff to this culvert was delineated in AutoCAD.

A=21,736 sqft/43,560 = 0.50 acres

	C_c	I	A		
Q (cfs)=	0.84	2.22	0.50	=	**0.94**

Rational Method Site Runoff Pipe P-3: Existing 12" CPP		
Project:	Delta Drive Subdivision	PDC ENGINEERS PLAN · DESIGN · CONSTRUCT A RESPEC COMPANY 9109 Mendenhall Mall Rd. Ste. 4, Juneau, AK 99801 907.780.6060 | AECC605
Owner:	Bicknell Inc.	
Date:	11/19/2020	
Prepared By:	M. Minsch	
Checked By:	M. Pusich	

$$\boldsymbol{Q = CIA}$$

Q= peak flow in cubic feet per second (cfs)
C = runoff coefficient
I = rainfall intensity (inches per hour)
A = catchment area (acres)

$$\boldsymbol{C_c = (C_1A_1 + C_2A_2)/A_t}$$

$C_c = composite\ runoff\ coefficient$
$C_{1,2} = runoff\ coefficient\ for\ each\ area\ land\ cover\ type$
$A_t = total\ area\ (acres)$
$A_{1,2} = areas\ of\ land\ cover\ (acres)$
$C_c = 0.85, see\ Appendix\ C\ for\ calculation$

$$\boldsymbol{T_c = T_1 + T_2 + \cdots + T_n}$$

$T_c = time\ of\ concentration\ (min)$
$T_{1,2} = travel\ time\ across\ separate\ flow\ path\ segments$ (min)
$T_c = 12.93\ min, see\ Appendix\ D\ for\ calculaton$

$$\boldsymbol{T_t = L/60V}$$

$T_t = travel\ time\ (min)$
$L = the\ distance\ of\ flow\ across\ a\ given\ segment\ (feet)$
$V = k_r\sqrt{S_0} = average\ velocity\ \left(\frac{feet}{\sec}\right) across\ land\ cover$
$k_r = time\ of\ concentration\ velocity\ factor\ (CBJ\ Manual\ of\ Storm\ Water\ BMP\ 2010, Table\ D-5, PG.D-10)$
$S_0 = slope\ of\ flow\ path\ (\frac{feet}{feet})$

Per CBJ Manual of Storm Water BMP 2010, Table 5-1, page 5-1, design event frequencies are specified. For driveway culvert, a 25-year storm event is the required design return period. We will base our analysis on a 25-year design return period for all drainage structures and catchment areas. Per CBJ Manual of Storm Water BMP 2010, page D-9, basins with a time and concentration 10 minutes or less shall use the 10 minute intensity. Basins with a time of concentration greater than 10 minutes and less than 30 minutes shall interpolate between the 10 and 30 minute values. Rainfall intensity for the site was sourced from the NOAA Atlas 14, Point Precipitation Frequency Estimates, see Appendix E, and is summarized as follows:

	Design Return Period
Tc 12.93 (min)	25-year
Interpolated Intensity (in/hr)=	**2.05**

Pipe P-3 is an existing 12" CPP culvert on the southeast side of the Delta Drive cul-de-sac that drains into the Delta Drive ditch system that is near the location where the new subdivision access will tie into the shoulder of the cul-de-sac. Runoff will flow into the area drain and catch basin before flowing through the culvert. The area that is proposed to contribute runoff to this culvert was delineated in AutoCAD.

A=10,626 sqft/43,560 = 0.24 acres

	C_c	I	A		
Q (cfs)=	0.85	2.05	0.24	=	**0.42**

Rational Method Site Runoff Pipe P-4: Existing 12" CPP		
Project:	Delta Drive Subdivision	PDC ENGINEERS PLAN · DESIGN · CONSTRUCT A RESPEC COMPANY 9109 Mendenhall Mall Rd, Ste. 4, Juneau, AK 99801 907.780.6060 | AECC605
Owner:	Bicknell Inc.	
Date:	11/19/2020	
Prepared By:	M. Minsch	
Checked By:	M. Pusich	

$$\boldsymbol{Q = CIA}$$

Q= peak flow in cubic feet per second (cfs)
C = runoff coefficient
I = rainfall intensity (inches per hour)
A = catchment area (acres)

$$\boldsymbol{C_c = (C_1A_1 + C_2A_2)/A_t}$$

$C_c = composite\ runoff\ coefficient$
$C_{1,2} = runoff\ coefficient\ for\ each\ area\ land\ cover\ type$
$A_t = total\ area\ (acres)$
$A_{1,2} = areas\ of\ land\ cover\ (acres)$
$C_c = 0.83, see\ Appendix\ C\ for\ calculation$

$$\boldsymbol{T_c = T_1 + T_2 + \cdots + T_n}$$

$T_c = time\ of\ concentration\ (min)$
$T_{1,2} = travel\ time\ across\ separate\ flow\ path\ segments$ (min)
$T_c = 16.60\ min, see\ Appendix\ D\ for\ calculaton$

$$\boldsymbol{T_t = L/60V}$$

$T_t = travel\ time\ (min)$
$L = the\ distance\ of\ flow\ across\ a\ given\ segment\ (feet)$
$V = k_r\sqrt{S_0} = average\ velocity\ \left(\frac{feet}{\sec}\right) across\ land\ cover$
$k_r = time\ of\ concentration\ velocity\ factor\ (CBJ\ Manual\ of\ Storm\ Water\ BMP\ 2010, Table\ D-5, PG.D-10)$
$S_0 = slope\ of\ flow\ path\ (\frac{feet}{feet})$

Per CBJ Manual of Storm Water BMP 2010, Table 5-1, page 5-1, design event frequencies are specified. For driveway culvert, a 25-year storm event is the required design return period. We will base our analysis on a 25-year design return period for all drainage structures and catchment areas. Per CBJ Manual of Storm Water BMP 2010, page D-9, basins with a time and concentration 10 minutes or less shall use the 10 minute intensity. Basins with a time of concentration greater than 10 minutes and less than 30 minutes shall interpolate between the 10 and 30 minute values. Rainfall intensity for the site was sourced from the NOAA Atlas 14, Point Precipitation Frequency Estimates, see Appendix E, and is summarized as follows:

	Design Return Period
Tc 16.60 (min)	25-year
Interpolated Intensity (in/hr)=	**1.77**

There is an existing 12" CMP culvert that drains into the existing Delta Drive drainage system at the location where the new subdivision access will tie into the end of the Delta Drive cul-de-sac. The 12" CMP culvert is proposed to be replaced with a 12" CPP culvert along with the rest of the Delta Drive storm system under CBJ Contract BE21-028 "Delta Drive Reconstruction." Work is scheduled for spring/summer 2021. The 12" CPP culvert is being installed to maintain the existing flow around the Delta Drive cul-de-sac.

A=21,786 sqft/43,560 = 0.50 acres

	C_c	I	A		
Q (cfs)=	0.83	1.77	0.50	=	**0.74**

Appendix C
Runoff Coefficient

Runoff Coefficient Calculations	
Project:	Delta Drive Subdivision
Owner:	Bicknell Inc.
Date:	11/19/2020
Prepared By:	M. Minsch
Checked By:	M. Pusich

Pipe P-1: Existing 12" CPP Culvert	
Total Basin Area (SQFT)=	26270
Total Basin Area (ACRE)=	0.60

Surface Type	Location	Area (SQFT)	Total (SQFT)	Total (Acre)	% Overall Basin	Surface Runoff Coefficient	Runoff Coefficient for Each Area
Pavement	Road	3143					
			3143	0.07215335	11.96%	0.9	0.1
Building Roofs	Mobile homes	7084					
			7084	0.16262626	26.97%	0.9	0.1
Gravel Area	Everywhere else	16043					
			16043	0.3682966	61.07%	0.8	0.3
		Total=	26270	0.60	100.00%		0.5
					Composite Runoff Coefficient		**0.84**

Pipe P-2: Proposed 12" CPP	
Total Basin Area (SQFT)=	21736
Total Basin Area (ACRE)=	0.5

Surface Type	Location	Area (SQFT)	Total (SQFT)	Total (Acre)	% Overall Basin	Surface Runoff Coefficient	Runoff Coefficient for Each Area
Pavement	Road	4842					
			4842	0.11115702	22.28%	0.9	0.1
Building Roofs	Mobile homes	4800					
			4800	0.11019284	22.08%	0.9	0.1
Gravel Area	Everywhere else	12094					
			12094	0.27764004	55.64%	0.8	0.2
		Total=	21736	0.50	100.00%		0.4
					Composite Runoff Coefficient		**0.84**

Runoff Coefficient Calculations		
Project:	Delta Drive Subdivision	PDC ENGINEERS PLAN • DESIGN • CONSTRUCT A RESPEC COMPANY 9109 Mendenhall Mall Rd, Ste. 4, Juneau, AK 99801 907.780.6060 | AECC605
Owner:	Bicknell Inc.	
Date:	11/19/2020	
Prepared By:	M. Minsch	
Checked By:	M. Pusich	

Pipe P-3: Existing 12" CPP	
Total Basin Area (SQFT)=	10626
Total Basin Area (ACRE)=	0.24

Surface Type	Location	Area (SQFT)	Total (SQFT)	Total (Acre)	% Overall Basin	Surface Runoff Coefficient	Runoff Coefficient for Each Area
Pavement	Road	5115					
			5115	0.11742424	48.14%	0.9	0.1
Gravel Area	Everywhere else	5511					
			5511	0.12651951	51.87%	0.8	0.1
		Total=	10626	0.24	100.00%		0.2
					Composite Runoff Coefficient		**0.84**

Pipe P-4: Existing 12" CPP Culvert	
Total Basin Area (SQFT)=	21786
Total Basin Area (ACRE)=	0.50

Surface Type	Location	Area (SQFT)	Total (SQFT)	Total (Acre)	% Overall Basin	Runoff Coefficient	Runoff Coefficient for Each Area
Pavement	Road	7037					
			7037	0.16154729	32.30%	0.9	0.1
Gravel Area	Everywhere else	14750					
			14750	0.33861341	67.70%	0.8	0.3
		Total=	21786	0.50	100.00%		0.4
					Composite Runoff Coefficient		**0.83**

Appendix D
Time of Concentration

Time of Concentration Calculations		
Project:	Delta Drive Subdivision	PDC ENGINEERS PLAN • DESIGN • CONSTRUCT A RESPEC COMPANY 9109 Mendenhall Mall Rd, Ste. 4, Juneau, AK 99801 907.780.6060 | AECC605
Owner:	Bicknell Inc.	
Date:	11/19/2020	
Prepared By:	M. Minsch	
Checked By:	M. Pusich	

Pipe P-1: Existing 12" CPP Culvert	
Time of Concentration	
Distance of Flow (Ft):	393
Time of concentration velocity factor:	20
Slope of Flow Path (Ft/Ft):	0.01
Velocity (Ft/Sec):	2
Time of Concentration (Min):	13.10

Pipe P-2: Proposed 12" CPP Culvert	
Time of Concentration	
Distance of Flow (Ft):	338
Time of concentration velocity factor:	20
Slope of Flow Path (Ft/Ft):	0.01
Velocity (Ft/Sec):	2
Time of Concentration (Min):	11.27

Pipe P-3: Existing 12" CPP Culvert	
Time of Concentration	
Distance of Flow (Ft):	388
Time of concentration velocity factor:	20
Slope of Flow Path (Ft/Ft):	0.01
Velocity (Ft/Sec):	2
Time of Concentration (Min):	12.93

Pipe P-4: Existing 12" CPP Culvert	
Time of Concentration	
Distance of Flow (Ft):	498
Time of concentration velocity factor:	20
Slope of Flow Path (Ft/Ft):	0.01
Velocity (Ft/Sec):	2
Time of Concentration (Min):	16.60

Appendix E
Rainfall Intensity

NOAA Atlas 14, Volume 7, Version 2
Location name: Juneau, Alaska, USA*
Latitude: 58.3922°, Longitude: -134.5604°
Elevation: 50.42 ft**
* source: ESRI Maps
** source: USGS

POINT PRECIPITATION FREQUENCY ESTIMATES

Sanja Perica, Douglas Kane, Sarah Dietz, Kazungu Maitaria, Deborah Martin, Sandra Pavlovic, Ishani Roy, Svetlana Stuefer, Amy Tidwell, Carl Trypaluk, Dale Unruh, Michael Yekta, Erica Betts, Geoffrey Bonnin, Sarah Heim, Lillian Hiner, Elizabeth Lilly, Jayashree Narayanan, Fenglin Yan, Tan Zhao

NOAA, National Weather Service, Silver Spring, Maryland
and
University of Alaska Fairbanks, Water and Environmental Research Center

PF tabular | PF graphical | Maps & aerials

PF tabular

PDS-based point precipitation frequency estimates with 90% confidence intervals (in inches/hour)[1]

Duration	Average recurrence interval (years)									
	1	2	5	10	25	50	100	200	500	1000
5-min	1.74 (1.40-2.21)	2.03 (1.61-2.62)	2.52 (1.94-3.34)	2.94 (2.22-3.97)	3.50 (2.58-4.86)	3.95 (2.84-5.59)	4.38 (3.10-6.34)	5.05 (3.49-7.45)	5.95 (4.01-9.01)	6.62 (4.38-10.2)
10-min	1.16 (0.936-1.48)	1.36 (1.08-1.76)	1.69 (1.31-2.24)	1.97 (1.49-2.66)	2.35 (1.73-3.26)	2.65 (1.91-3.75)	2.94 (2.08-4.25)	3.40 (2.35-5.01)	4.00 (2.69-6.05)	4.45 (2.94-6.86)
15-min	0.908 (0.728-1.16)	1.06 (0.840-1.37)	1.32 (1.02-1.75)	1.54 (1.16-2.08)	1.84 (1.35-2.55)	2.06 (1.49-2.92)	2.30 (1.62-3.32)	2.65 (1.83-3.90)	3.12 (2.10-4.72)	3.47 (2.30-5.35)
30-min	0.602 (0.484-0.766)	0.704 (0.556-0.908)	0.876 (0.676-1.16)	1.02 (0.770-1.38)	1.22 (0.896-1.69)	1.37 (0.986-1.94)	1.52 (1.07-2.20)	1.76 (1.22-2.59)	2.07 (1.39-3.13)	2.30 (1.52-3.55)
60-min	0.413 (0.332-0.525)	0.482 (0.381-0.622)	0.600 (0.463-0.794)	0.699 (0.528-0.944)	0.834 (0.613-1.16)	0.939 (0.676-1.33)	1.04 (0.736-1.51)	1.20 (0.833-1.78)	1.42 (0.955-2.14)	1.58 (1.04-2.43)
2-hr	0.306 (0.246-0.390)	0.358 (0.283-0.462)	0.447 (0.345-0.592)	0.520 (0.394-0.703)	0.622 (0.457-0.862)	0.698 (0.503-0.990)	0.775 (0.547-1.12)	0.894 (0.619-1.32)	1.05 (0.710-1.59)	1.17 (0.776-1.81)
3-hr	0.270 (0.217-0.343)	0.315 (0.249-0.407)	0.394 (0.304-0.521)	0.459 (0.347-0.620)	0.548 (0.403-0.761)	0.616 (0.444-0.872)	0.683 (0.482-0.987)	0.788 (0.545-1.16)	0.927 (0.625-1.40)	1.03 (0.683-1.59)
6-hr	0.218 (0.175-0.277)	0.255 (0.201-0.328)	0.317 (0.245-0.420)	0.369 (0.279-0.498)	0.441 (0.324-0.612)	0.496 (0.357-0.703)	0.551 (0.389-0.796)	0.636 (0.440-0.938)	0.748 (0.505-1.13)	0.834 (0.552-1.29)
12-hr	0.163 (0.131-0.207)	0.190 (0.150-0.245)	0.234 (0.181-0.310)	0.271 (0.205-0.366)	0.324 (0.238-0.450)	0.368 (0.265-0.521)	0.414 (0.292-0.598)	0.478 (0.331-0.705)	0.563 (0.380-0.852)	0.627 (0.415-0.968)
24-hr	0.118 (0.107-0.131)	0.138 (0.124-0.155)	0.167 (0.147-0.192)	0.192 (0.166-0.225)	0.230 (0.194-0.275)	0.262 (0.218-0.319)	0.298 (0.243-0.369)	0.344 (0.276-0.434)	0.405 (0.317-0.522)	0.451 (0.348-0.591)
2-day	0.080 (0.073-0.089)	0.093 (0.083-0.104)	0.111 (0.098-0.128)	0.127 (0.110-0.148)	0.150 (0.127-0.180)	0.170 (0.141-0.207)	0.192 (0.156-0.237)	0.219 (0.176-0.276)	0.255 (0.200-0.329)	0.283 (0.218-0.370)
3-day	0.063 (0.058-0.070)	0.073 (0.065-0.082)	0.087 (0.076-0.100)	0.098 (0.085-0.115)	0.116 (0.098-0.138)	0.130 (0.108-0.158)	0.146 (0.119-0.181)	0.166 (0.133-0.209)	0.192 (0.151-0.248)	0.212 (0.163-0.278)
4-day	0.054 (0.049-0.060)	0.062 (0.055-0.069)	0.073 (0.064-0.084)	0.082 (0.071-0.096)	0.096 (0.081-0.115)	0.108 (0.090-0.132)	0.121 (0.099-0.150)	0.137 (0.110-0.173)	0.158 (0.124-0.204)	0.174 (0.134-0.228)
7-day	0.040 (0.036-0.044)	0.045 (0.041-0.051)	0.053 (0.047-0.061)	0.060 (0.052-0.070)	0.070 (0.059-0.084)	0.079 (0.065-0.096)	0.088 (0.072-0.109)	0.100 (0.080-0.126)	0.116 (0.091-0.149)	0.127 (0.098-0.167)
10-day	0.033 (0.030-0.037)	0.038 (0.034-0.042)	0.044 (0.039-0.051)	0.050 (0.043-0.058)	0.058 (0.049-0.069)	0.065 (0.054-0.079)	0.073 (0.059-0.090)	0.082 (0.066-0.104)	0.095 (0.075-0.123)	0.105 (0.081-0.138)
20-day	0.025 (0.023-0.028)	0.029 (0.026-0.032)	0.034 (0.030-0.039)	0.038 (0.032-0.044)	0.043 (0.037-0.052)	0.048 (0.040-0.059)	0.053 (0.044-0.066)	0.060 (0.048-0.076)	0.068 (0.054-0.088)	0.075 (0.058-0.098)
30-day	0.022 (0.020-0.025)	0.025 (0.023-0.029)	0.030 (0.026-0.034)	0.033 (0.029-0.039)	0.038 (0.032-0.046)	0.042 (0.035-0.051)	0.046 (0.038-0.058)	0.052 (0.041-0.065)	0.058 (0.046-0.075)	0.064 (0.049-0.083)
45-day	0.020 (0.018-0.022)	0.023 (0.021-0.026)	0.027 (0.023-0.031)	0.030 (0.026-0.035)	0.034 (0.029-0.040)	0.037 (0.031-0.045)	0.041 (0.033-0.050)	0.044 (0.036-0.056)	0.050 (0.039-0.064)	0.054 (0.041-0.070)
60-day	0.018 (0.017-0.020)	0.021 (0.019-0.024)	0.024 (0.022-0.028)	0.027 (0.023-0.032)	0.031 (0.026-0.037)	0.033 (0.028-0.041)	0.036 (0.029-0.045)	0.039 (0.031-0.049)	0.042 (0.033-0.054)	0.045 (0.035-0.059)

[1] Precipitation frequency (PF) estimates in this table are based on frequency analysis of partial duration series (PDS).

Numbers in parenthesis are PF estimates at lower and upper bounds of the 90% confidence interval. The probability that precipitation frequency estimates (for a given duration and average recurrence interval) will be greater than the upper bound (or less than the lower bound) is 5%. Estimates at upper bounds are not checked against probable maximum precipitation (PMP) estimates and may be higher than currently valid PMP values.

Please refer to NOAA Atlas 14 document for more information.

Back to Top

https://hdsc.nws.noaa.gov/hdsc/pfds/pfds_printpage.html?lat=58.3922&lon=-134.5604&data=intensity&units=english&series=pds

PF graphical

PDS-based intensity-duration-frequency (IDF) curves
Latitude: 58.3922°, Longitude: -134.5604°

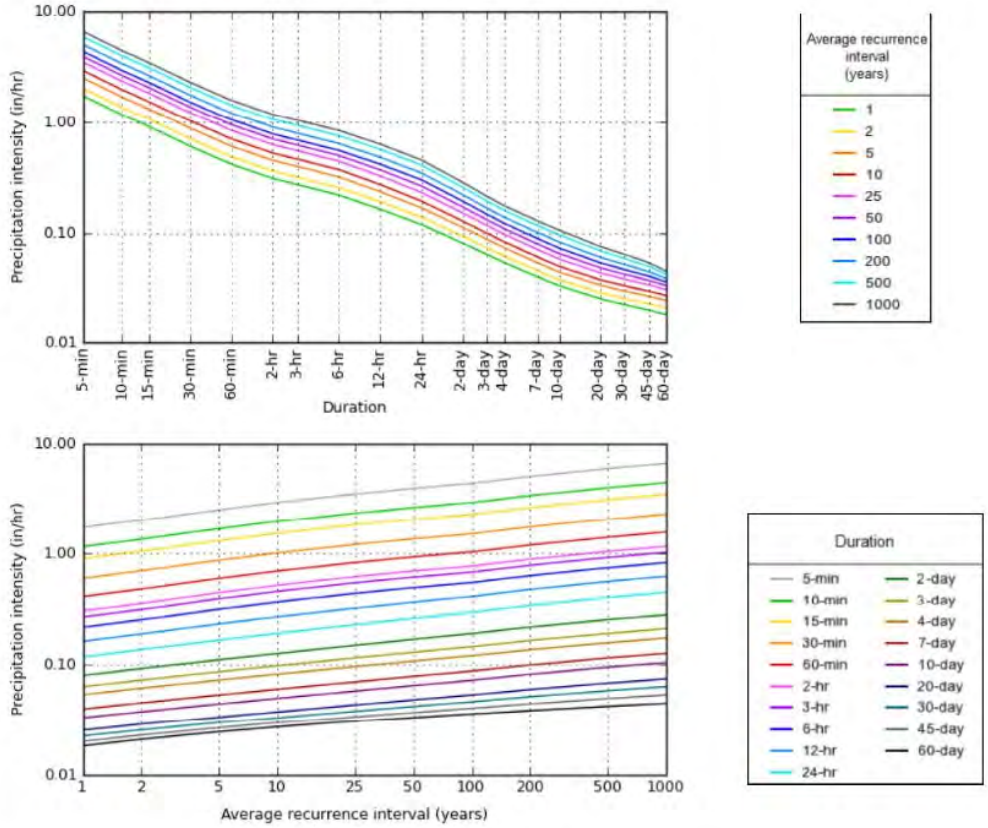

NOAA Atlas 14, Volume 7, Version 2 Created (GMT): Thu Nov 19 20:30:02 2020

https://hdsc.nws.noaa.gov/hdsc/pfds/pfds_printpage.html?lat=58.3922&lon=-134.5604&data=intensity&units=english&series=pds

Maps & aerials

Small scale terrain

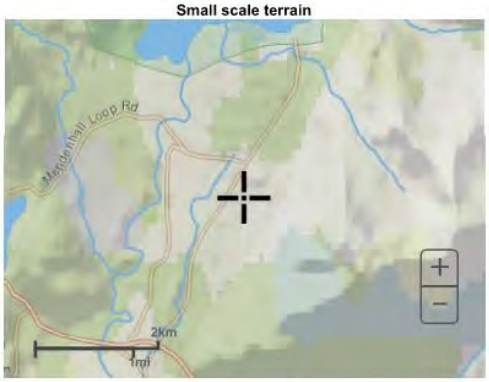

Large scale terrain

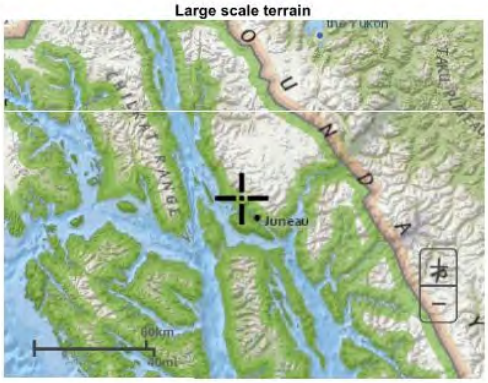

Large scale map

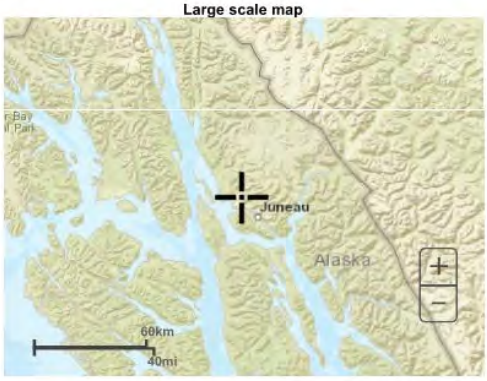

Large scale aerial

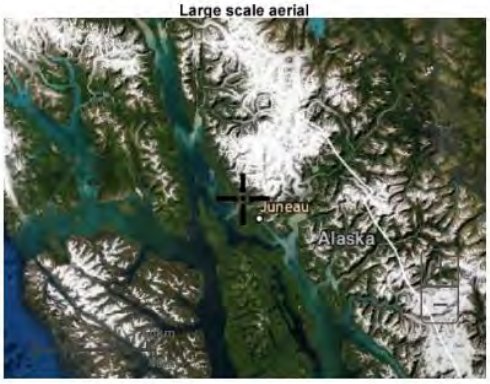

https://hdsc.nws.noaa.gov/hdsc/pfds/pfds_printpage.html?lat=58.3922&lon=-134.5604&data=intensity&units=english&series=pds

Appendix F
Existing & Proposed Capacity Calcs

Discharge Capacity Calculations		
Project:	Delta Drive Subdivision	PDC ENGINEERS PLAN • DESIGN • CONSTRUCT A RESPEC COMPANY 9109 Mendenhall Mall Rd, Ste. 4, Juneau, AK 99801 907.780.6060 | AECC605
Owner:	Bicknell Inc.	
Date:	11/19/2020	
Prepared By:	M. Minsch	
Checked By:	M. Pusich	

The following equation was used to calculate the capacity of pipes P-1, P-2, P-3 and P-4 that drain into the existing Delta Drive ditch system. Capacity was also calculated for the 18" CPP culvert that will transport all of the water discharged from the proposed site into the Delta Drive storm system. The equation is from "Urban Drainage Design Manual: Hydraulic Engineering Circular No. 22, Third Edition."

$$Q = (\mathrm{K/n}) \text{ x A x } R^{0.67} \text{x } S^{0.5}$$

Q= Discharge in cubic feet per second (cfs)
K = Coefficient for English units (1.486)
n = Manning's coefficient of roughness, obtained from Table 5-3, Page 5-5, of the CBJ Stormwater Manual
A = Cross sectional area in square feet
R = Hydraulic radius
S= Slope

Pipe P-1: Existing 12" CPP Culvert

Inlet Invert=95.19, Outlet Invert=94.98, Length=43', n=0.014. The Manning's n value of 0.014 was determined by the pipe type (CPP-smooth interior) Table 5-3.

	k	n	A	R	S		
Q (cfs)	1.486	0.014	0.79	.25	0.006	=	2.57

Pipe P-2: Proposed 12" CPP Culvert

Inlet Invert=96.55, Outlet Invert=96.20, Length=70', n=0.014. The Manning's n value of 0.014 was determined by the pipe type (CPP-smooth interior) Table 5-3.

	k	n	A	R	S		
Q (cfs)	1.486	0.014	0.79	0.25	0.005	=	2.34

Pipe P-3: Existing 12" CPP Culvert

Inlet Invert=95.21, Outlet Invert=94.88, Length=54', n=0.014. The Manning's n value of 0.014 was determined by the pipe type (CPP-smooth interior) Table 5-3.

	k	n	A	R	S		
Q (cfs)	1.486	0.014	0.79	0.25	0.0061	=	2.59

Pipe P-4: Existing 12" CPP Culvert

Inlet Invert=95.84, Outlet Invert=94.88, Length=5', n=0.014. The Manning's n value of 0.014 was determined by the pipe type (CPP-smooth interior) Table 5-3.

	k	n	A	R	S		
Q (cfs)	1.486	0.014	0.79	0.25	.1920	=	14.51

Pipe P-5: Existing 18" CPP Culvert

Inlet Invert=95.21, Outlet Invert=94.88, Length=5', n=0.014. The Manning's n value of 0.014 was determined by the pipe type (CPP-smooth interior) Table 5-3.

	k	n	A	R	S		
Q (cfs)	1.486	0.014	1.77	0.375	.004	=	14

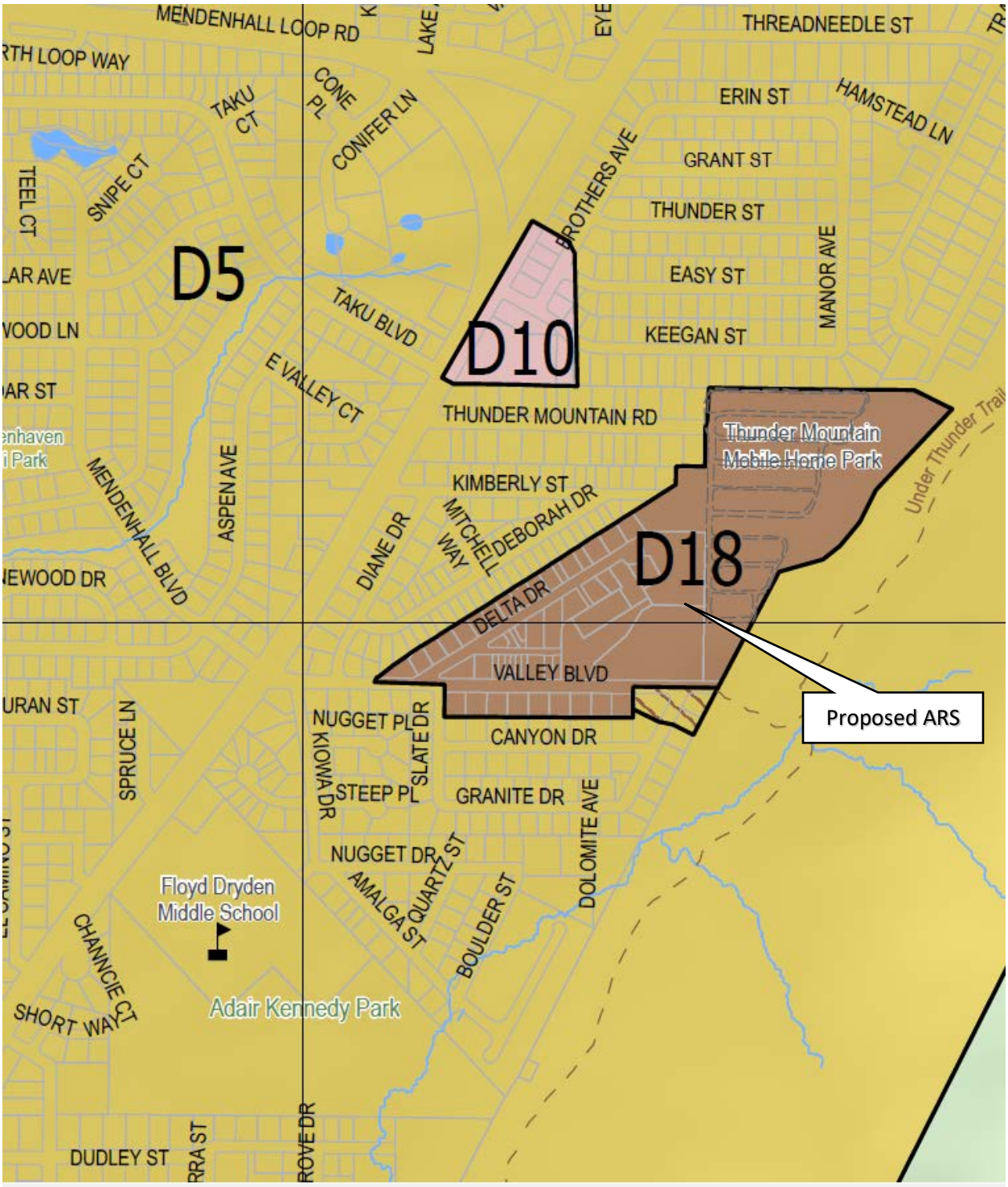
MENDENHALL LOOP RD
THREADNEEDLE ST
ERIN ST
HAMSTEAD LN
GRANT ST
THUNDER ST
EASY ST
KEEGAN ST
MANOR AVE
BROTHERS AVE
TAKU CT
CONE PL
CONIFER LN
SNIPE CT
TEEL CT
D5
D10
D18
TAKU BLVD
E VALLEY CT
THUNDER MOUNTAIN RD
Thunder Mountain Mobile Home Park
Under Thunder Trail
KIMBERLY ST
MITCHELL WAY
DEBORAH DR
DIANE DR
ASPEN AVE
MENDENHALL BLVD
DELTA DR
VALLEY BLVD
Proposed ARS
NUGGET PL
SLATE DR
CANYON DR
KIOWA DR
STEEP PL
GRANITE DR
SPRUCE LN
NUGGET DR
QUARTZ ST
AMALGA ST
BOULDER ST
DOLOMITE AVE
Floyd Dryden Middle School
Adair Kennedy Park
CHANNCIE CT
SHORT WAY
DUDLEY ST

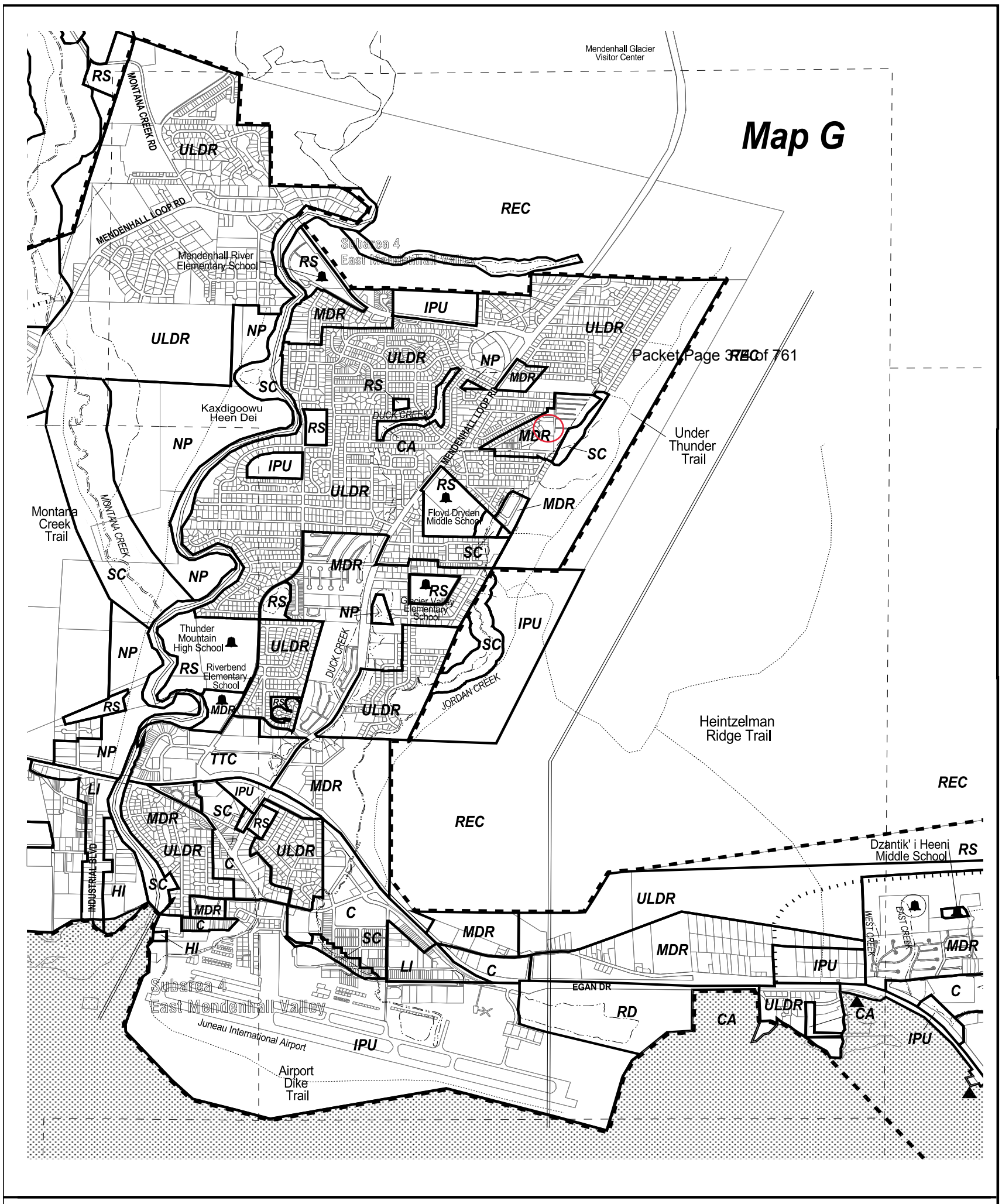

Packet Page 330 of 761

NATURAL RESOURCE	REC	Recreational Resource
	RD	Resource Development
	SP	State Park
	NP	CBJ Natural Area Park
	RS	CBJ Recreational Service Park
	CA	CBJ Conservation Area
	SC	Stream Protection Corridor
COMMERCIAL INDUSTRIAL	C	Commercial
	MC	Marine Commercial
	WCI	Waterfront Commercial Industrial
	LI	Light Industrial
	HI	Heavy Industrial

2000 0 2000 Feet

RESIDENTIAL	RDR	Rural Dispersed Residential
	RLDR	Rural Low Density Residential
	ULDR	Urban Low Density Residential
	MDR/SF	Medium Density Residential- Single Family
	MDR	Medium Density Residential
	HDR	High Density Residential
	TTC	Traditional Town Center
	M/MU	Marine Mixed Use
PUBLIC	IPU	Institutional and Public Use
		Existing School
		Potential School Location
ROADS TRAILS		Potential Arterial (alignment not specific)
		Potential Road (alignment not specific)
		Trails

City & Borough of Juneau
COMPREHENSIVE PLAN
City & Borough of Juneau
Alaska's Capital City
Adopted October 20th, 2008
Ordinance No. 2008-30

N

OTHER		New Growth Areas
		Mendenhall Wetlands State Game Refuge
		Subarea Boundary
		Urban Service Area
		Beach Access
		Streams

NOTE: Potential geophysical hazards, wetlands, flood zones, natural resource setbacks or other features which can affect properties may be present. CONTACT THE COMMUNITY DEVELOPMENT DEPARTMENT FOR DETAILED INFORMATION.

Prepared by: Community Development Department

Map 11.8

Invitation to Comment

On a proposal to be heard by the CBJ Planning Commission

Your Community, Your Voice

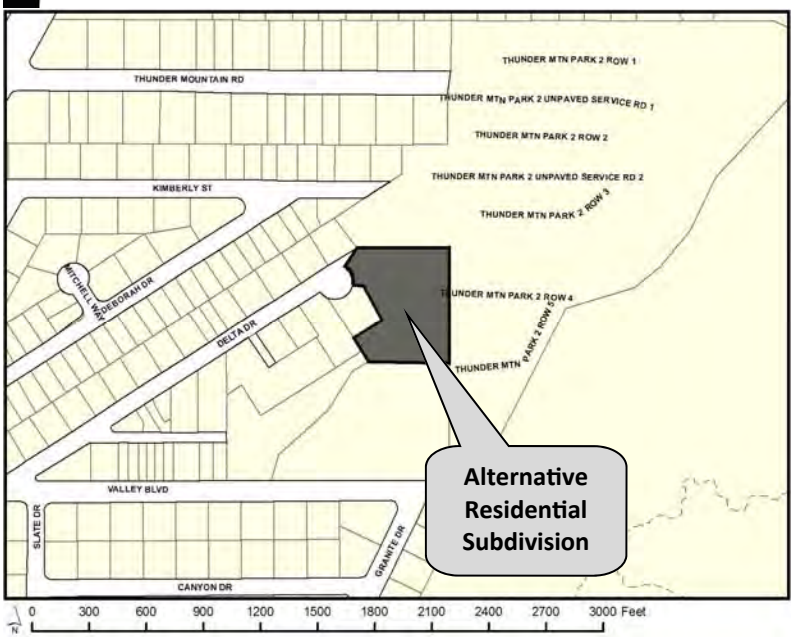

CITY AND BOROUGH OF JUNEAU
ALASKA'S CAPITAL CITY
COMMUNITY DEVELOPMENT
155 S. Seward Street Juneau, Alaska 99801

TO:

An application has been submitted for consideration and public hearing by the Planning Commission for an **Alternative Residential Subdivision creating 15 lots** at **4090 Delta Drive** in a **D18 zone**.

TIMELINE

Staff Report expected to be posted **Monday, January 4, 2020** at **https://juneau.org/community-development/planning-commission.** Find hearing results, meeting minutes and more here as well.

Now through Dec. 21	Dec. 22 — noon, Jan. 11	HEARING DATE & TIME: 7:00 pm, Jan. 12, 2021	Jan. 13
Comments received during this period will be sent to the Planner, **Laurel Christian,** to be included as an attachment in the staff report.	Comments received during this period will be sent to Commissioners to read in preparation for the hearing.	This virtual meeting will be by video and telephonic participation only. To join the Webinar, visit: https://juneau.zoom.us/j/93626358724. The Webinar ID is: 936 2635 8724. To join by telephone, call: +1 253 215 8782 or +1 346 248 7799 or +1 669 900 6833 or +1 301 715 8592 or +1 312 626 6799 or +1 929 436 2866 and enter the Webinar ID.	The results of the hearing will be posted online.

Phone: **(907)586-0715** ◆ Email: **pc_comments@juneau.org**
Mail: **Community Development, 155 S. Seward St, Juneau AK 99801**

Case No.: SMP2020 0004/ARP2020 0001
Parcel No.: 5B2401620011
CBJ Parcel Viewer: http://gis.juneau.org

Laurel Christian

From: dblommer@bicknellinc.com
Sent: Monday, December 28, 2020 10:23 AM
To: Laurel Christian
Subject: Delta Dr Sign Posted
Attachments: Resized_20201228_092437.jpeg

EXTERNAL E-MAIL: BE CAUTIOUS WHEN OPENING FILES OR FOLLOWING LINKS

Hi Laurel,

Here is the picture of the sign at Delta Dr. Let me know if we need to do anything else.

Thanks,
David

CITY AND BOROUGH OF JUNEAU
ALASKA'S CAPITAL CITY
COMMUNITY DEVELOPMENT

(907) 586-0757
Jill.Maclean@juneau.org
www.juneau.org/CDD
155 S. Seward Street • Juneau, AK 99801

MEMO

From: **Jill Maclean, AICP, Director**

To: **Michael LeVine, Planning Commission Chair**

Case Number: **ARP2020 0001 and SMP2020 0004**

RE: Staff Report Correction

Staff received several questions and requests for clarification on staff reports ARP2020 0001 and SMP2020 0004. Below, please find corrections and / or additional clarification. Items bolded are necessary revisions or corrections to the staff report.

ARP2020 0001:

- **Page 3 of 12 (packet page 61): Inaccurately states that only single-family and accessory apartments are permissible. The Alternative Residential Subdivision (ARS) ordinance allows for residential uses (49.15.920(m)), including multifamily dwellings, e.g. condominiums, and is not restricted to single-family dwellings. The residential uses follow the underlying zoning district.**

SMP2020 0004:

- Page 4 of 8 (packet page 149): Clarifying that the staff report is accurate for the number of dwelling units proposed on this site. Density, under the ARS 49.15.920(e)(1) *Density*, is calculated by, *"The number of dwelling units permitted in the development shall be calculated by multiplying the maximum number of dwelling units per gross acre permitted in the underlying zoning district by the number of acres in the alternative residential subdivision and rounding to the nearest whole number."*
    - In this situation, the parent lot is 79,189 square feet in a D18 zoning district. Minimum lot size is 5,000 square feet, and the maximum number of dwelling units is 33. The developer is proposing 14 dwelling units.
    - In other words, the density is based upon the acreage of the parent lot; and a developer may choose how to divvy up the density; and even if a unit-lot on its own meets or exceeds the minimum lot size of the underlying zoning district, additional units are not permissible if the maximum number of dwelling units already exists on the other unit lots. This does not include density bonuses, which are not a consideration for this project.
    - Should the developer choose to modify the type of dwellings or add additional dwelling units, a modification to the plat and / or the Alternative Residential Plan may be required depending on the proposal.

- Page 5 of 8 (packet page 150): Clarifying that the staff report is accurate. Roads within an ARS development may be private *or* public (if the developer builds to city standards, the road may be adopted as a public street).
    - An ARS is permitted to have a private access roads within the development, if the criteria in 49.15.920(f) is met, and these are listed and discussed in the table. The table establishes that the ARS meets the criteria for private access within the development.
    - Exempting the access within the development from 49.35 does not exempt the parent lot from fronting and accessing onto a publically maintained right-of-way. Access to the development must be through a public right-of-way – this is criteria is met, because the parent lot fronts accesses onto Delta Drive.

Page 4 of 8 (packet page 149) Plat Notes:

- **First Plat Note on this page is not completely accurate and should be DELETED.** Plat Note Reads: At time of recording, Lots 2 through 11 and 13 through 15 are limited to one single-family dwelling. Lot 12 may be permitted one single-family dwelling and one accessory apartment. See CBJ 49.15 article ix for current regulations.
    - (Note: Generally, in multi-family zoning districts, units are units and are not considered "accessory apartments" because multiple units are permitted on one lot).

- Third Plat Note should be clarified to read:
    - **Plat Note: Per CBJ 49.15.920(j), No parking areas, dwelling units, unit-lots, or permissible uses may be located within the perimeter buffer. Access to the development may cross a portion of the buffer.**

Planning Commission

(907) 586-0715
PC_Comments@juneau.org
www.juneau.org/plancomm
155 S. Seward Street • Juneau, AK 99801

PLANNING COMMISSION
NOTICE OF DECISION

Date: January 25, 2021
File No.: SMP2020 0004

Bicknell, Inc.
Attn: David Blommer
P.O. Box 33517
Juneau, AK 99803

Proposal:	Applicant proposes an Alternative Residential Subdivision creating 15 lots
Property Address:	4090 Delta Drive
Legal Description:	Thunder Mountain Park Tract 1A
Parcel Code No.:	5B2401620011
Hearing Date:	January 12, 2021

The Planning Commission, at its regular public meeting, adopted the analysis and findings listed in the attached memorandum dated December 29, 2020, and late file memorandum (provided January 12, 2021) with amendments and approved the Alternative Residential Subdivision Preliminary Plat for a 15 lot subdivision to be conducted as described in the project description and project drawings submitted with the application (and with the following conditions :)

1. Prior to approval of the final plat, Certification from the CBJ Treasurer is required showing that all real property taxes and special assessments levied against the property for the year of recording have been paid;
2. Prior to approval of a final plat, the applicant shall submit a complete set of construction plans for all required improvements to the Community Development Department for review by the Director of Engineering & Public Works for compliance with CBJ 49.35.140;

3. Prior to approval of the final plat, the developer shall submit a final drainage plan to be approved by CBJ Engineering & Public Works. This drainage plan must be prepared by an Alaskan licensed engineer in accordance with CBJ 49.35.510;
4. Prior to approval of the final plat, the applicant shall submit a revised preliminary plat with the following revisions:
    a. Add the following plat note:
        i. ACCESS TO LOTS SHALL BE VIA ACCESS EASEMENTS SHOWN ON THIS PLAT AND IS SUBJECT TO THE REQUIREMENTS IN THE "[private common driveway access, utility, and maintenance agreement – edit title as appropriate]" RECORDED WITH THIS SUBDIVSION.
    b. Show a five-foot perimeter buffer along the southwest lot line bordering Delta Acres Addition 1 Lot 8.
    c. Include bearing labels for:
        i. The eastern lot line of Lot 6
        ii. The lot lines between lots 7 and 8 and 9 and 10
    d. Per sheet C203, Grading Plan, a drainage easement should be added to the following locations:
        i. Eastern side of the development in the 10-foot perimeter buffer
        ii. Rear of Lot 11;
5. Prior to the issuance of the first temporary certificate of occupancy, the master water meter for the development shall be installed by the developer;
6. Prior to the issuance of the eleventh (11) temporary certificate of occupancy for the development, access to and within the development shall be paved.

Attachments: December 29, 2020, memorandum from Laurel Christian, Community Development, to the CBJ Planning Commission regarding ARP2020 0001; and memorandum from Jill Maclean, Director, AICP, Community Development regarding ARP2020 0001 and SMP2020 0004 provided January 12, 2021.

This Notice of Decision does not authorize any construction. Prior to starting any project, it is the applicant's responsibility to obtain the required building permits.

This Notice of Decision constitutes a final decision of the CBJ Planning Commission. Appeals must be brought to the CBJ Assembly in accordance to CBJ 01.50.030. Appeals must be filed by 4:30 P.M. on the day twenty days from the date the decision is filed with the City Clerk, pursuant to CBJ 01.50.030 (c). Any

action by the applicant in reliance on the decision of the Planning Commission shall be at the risk that the decision may be reversed on appeal (CBJ 49.20.120).

Effective Date: The permit is effective upon approval by the Commission, January 12, 2021.

Expiration Date: The permit will expire five (5) years after the effective date, or January 12, 2026, if no Building Permit has been issued and substantial construction progress has not been made in accordance with the plans for which the subdivision permit was authorized or no final plat has been approved. Application for permit extension must be submitted thirty days prior to the expiration date.

Michael LeVine, Chair Planning Commission	January 26, 2021 Date
Filed With City Clerk	January 26, 2021 Date

cc: Plan Review

NOTE: The Americans with Disabilities Act (ADA) is a federal civil rights law that may affect this subdivision. ADA regulations have access requirements above and beyond CBJ - adopted regulations. Owners and designers are responsible for compliance with ADA. Contact an ADA - trained architect or other ADA trained personnel with questions about the ADA: Department of Justice (202) 272-5434, or fax (202) 272-5447, NW Disability Business Technical Center (800) 949-4232, or fax (360) 438-3208.

CITY AND BOROUGH OF JUNEAU
ALASKA'S CAPITAL CITY
COMMUNITY DEVELOPMENT

PLANNING COMMISSION STAFF REPORT
MAJOR SUBDIVISION SMP2020-0004
HEARING DATE: JANUARY 12, 2020

(907) 586-0715
CDD_Admin@juneau.org
www.juneau.org/CDD
155 S. Seward Street • Juneau, AK 99801

DATE: December 29, 2020

TO: Michael LeVine, Chair, Planning Commission

BY: Laurel Christian, Planner II

THROUGH: Jill Maclean, Director, AICP

PROPOSAL: Preliminary Plat Approval for the Delta Drive Subdivision, an Alternative Residential Subdivision creating 14 unit-lots and 1 parent lot

STAFF RECOMMENDATION: Approval with conditions

KEY CONSIDERATIONS FOR REVIEW:

- 14 lots will be for single-family dwellings.
- The remaining parent lot will contain the perimeter buffer, privately maintained access road, and other common amenities.
- This approval is subject to ARP20200001.

GENERAL INFORMATION	
Property Owner	Bicknell, Inc.
Applicant	Bicknell, Inc.
Property Address	4090 Delta Drive
Legal Description	Thunder Mountain Park Tract 1A
Parcel Number	5B2401620011
Zoning	D18 Multi-family Residential
Lot Size	79,189 sq. ft.
Water/Sewer	Public
Access	Delta Drive
Existing Land Use	Vacant
Associated Applications	ARP20200001

ALTERNATIVE ACTIONS:

1. **Amend:** require additional conditions, or delete or modify the recommended conditions.
2. **Deny:** deny the permit and adopt new findings for items 1-5 below that support the denial.
3. **Continue:** to a future meeting date if determined that additional information or analysis is needed to make a decision, or if additional testimony is warranted.

ASSEMBLY ACTION REQUIRED:

Assembly action is not required for this permit.

STANDARD OF REVIEW:

- Quasi-judicial decision
- Requires five (5) affirmative votes for approval
- Code Provisions:
  - 49.15.402
  - 49.15.411
  - 49.35
  - 49.80

The Commission shall hear and decide the case per *49.15.400(a) - Purpose and applicability.* *The purpose of this article is to facilitate the subdivision of land to promote the public health, safety, and general welfare of the citizens of the CBJ in accordance with the Comprehensive Plan of the City and Borough of Juneau, Alaska.*

And per 49.15.402(a) *A major subdivision permit is required for subdivisions resulting in 14 or more lots.*

SITE FEATURES AND ZONING

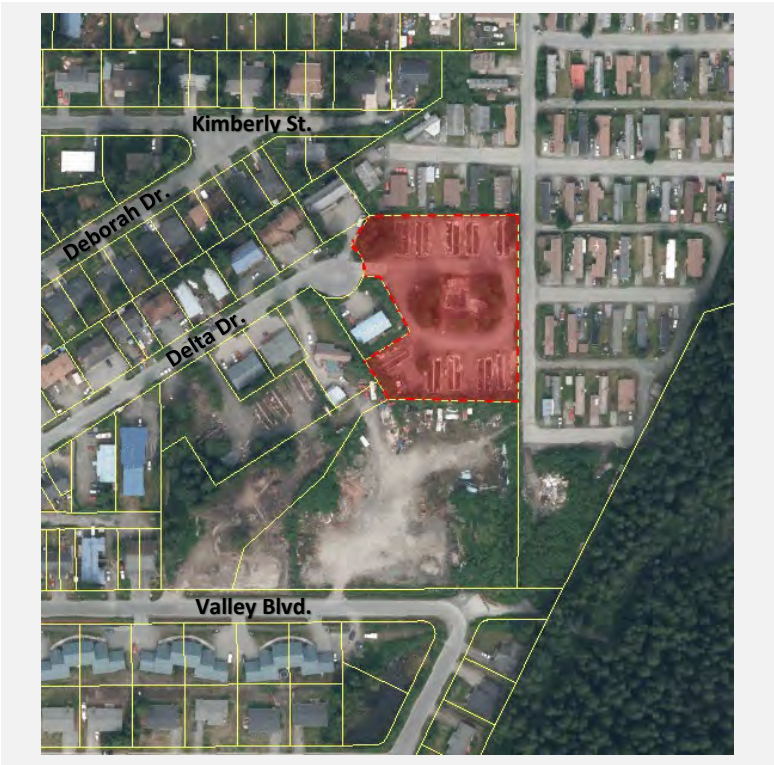

SURROUNDING ZONING AND LAND USES	
North (D18)	Thunder Mountain Mobile Home Park
South (D18)	Vacant
East (D18)	Thunder Mountain Mobile Home Park
West (D18)	Multi-family four-plex

SITE FEATURES	
Anadromous	None
Flood Zone	None
Hazard	None
Hillside	None
Wetlands	None
Parking District	None
Historic District	None
Overlay Districts	None

BACKGROUND INFORMATION

Project Description – The applicant requests a preliminary plat approval for the Delta Drive Subdivision, an Alternative Residential Subdivision (ARS) creating 15 lots. The proposal would create 14 unit-lots for single-family dwellings and one (1) parent-lot containing the perimeter buffer, privately maintained access road, and other common amenities (15 lots total).

A project narrative can be found in Attachment A and the preliminary plat can be found in Attachment B.

Background – Background information includes the process for approval, and relevant development history for the lot. Information on the ARS design may be found in the staff report for ARP20200001.

ARS Process

The ARS process requires two preliminary applications, both of which are being presented at the same Planning Commission meeting.

- This application (SMP20200004) is for approval of the preliminary *plat* for the ARS. The plat is reviewed for compliance with subdivision code [CBJ 49.15.402].
- Another separate (ARP20200001) is for review of the preliminary *plan* for the ARS. This application must be acted on first. The plan is reviewed for compliance with applicable ARS code and design guidelines [CBJ 49.15.900].

If the preliminary plan and preliminary plat are approved, the developer may for apply for review of the ARS final plan and ARS final plat. These two applications may be presented at the same public meeting, or separately. The

purpose of a second review by the Commission is to ensure the final plan conforms with the approved preliminary plan and that any conditions of approval have been met.

Development History

The table below summarizes relevant history for the lot and proposed development.

Item	Summary
Plat History	In 1992, the lot was platted as an expansion of the Thunder Mountain Park (plat no. 92-18). No restrictive plat notes exist for the lot.
Land Use Cases	In 1992, a conditional use permit (CUP) was issued to expand the Thunder Mountain Mobile Home park onto the lot (USE-CU92-01). In 2013, another CUP was issued for a 12-unit apartment building on the lot; this permit expired (USE20130017). The lot is currently vacant.
Building Permits	In 1992, a building permit was issued to place 10 modular homes on permanent concrete foundations (BLD-0747301). In 2013, a demolition permit was issued to remove the modular homes (DMO20130007). The lot currently contains the 10 concrete foundations with no modular structures. The applicant intends to repurpose the foundations.

ANALYSIS

Phasing – The proposed ARS will not be phased.

Minimum Lot Dimensions – Typically, the D18 zoning district requires a 5,000 square foot minimum lot size for a standard lot. Minimum lot dimensional requirements for the unit-lots created through this ARS are waived [49.15.920(c)]. The ARS allows for *unit-lot residential communities in which all or some of the lots do not substantially conform to the minimum requirements for a traditional subdivided lot [49.15.900].*

The unit-lots created through this subdivision range from approximately 2,000 square feet to 5,000 square feet. The parent-lot measures approximately 28,000 square feet.

Density – Per 49.15.920(e)(1) *The number of dwelling units permitted in the development shall be calculated by multiplying the maximum number of dwelling units per gross acre permitted in the underlying zoning district by the number of acres in the alternative residential subdivision and rounding to the nearest whole number.*

Maximum Dwelling Units Per Acre	Parent Lot Size	Maximum Density	Number of Dwelling Units Proposed
18	79,189 sq. ft. (1.8179 acres)	33 dwelling units	14

Maximum density is not exceeded, as demonstrated in the table above. The applicant has not requested a density bonus. Each unit-lot could accommodate one single-family dwelling. Lot 12 exceeds the minimum lot size for the zoning district and could accommodate a single-family dwelling and accessory apartment [49.15.920(m)]. The following plat note has been added:

Plat Note: AT TIME OF RECORDING, LOTS 2 THROUGH 11 AND 13 THROUGH 15 ARE LIMITED TO ONE SINGLE FAMILY DWELLING. LOT 12 MAY BE PERMITTED ONE SINGLE FAMILY DWELLING AND ONE ACCESSORY APARTMENT. SEE CBJ 49.15 ARTICLE IX FOR CURRENT REGULATIONS.

Habitat – There are no known anadromous streams or wetlands on the lot.

Hazard Zones - There are no hazard zones on the lot.

LOT DESIGN

Alternative Residential Subdivision Plat Notes – The lots created through this subdivision are part of an ARS. To ensure compliance with CBJ 49.15 Article 9, the following plat notes have been added:

Plat Note: THE LOTS CREATED THROUGH THIS SUBDIVISION ARE AN ALTERNATIVE RESIDENTIAL SUBDIVISION. AT TIME OF PLAT RECORDING DEVELOPMENT OF LOTS, INCLUDING FURTHER SUBDIVISION OR USE, IS SUBJECT TO CBJ 49.15 ARTICLE IX. SEE CITY AND BOROUGH OF JUNEAU LAND USE CODE FOR CURRENT REGULATIONS.

Plat Note: THERE SHALL BE NO DISTURBANCE OR DEVELOPMENT WITHIN THE PERIMETER BUFFER SHOWN ON THIS PLAT, AS REQUIRED BY CBJ 49.15.920(j).

TRAFFIC

Traffic – According to CBJ 49.40.300(a)(2) a traffic impact analysis is not required; the development is not anticipated to generate more than 250 Average Daily Trips (ADTs).

Use	Units	Trips Generated	Total Trips
Single-family Residential	14	9.52 per dwelling	**133.28**

ACCESS AND PUBLIC IMPROVEMENTS

Access – Per 49.35.250(a), staff has determined that the primary access to the subdivision is Delta Drive. Within the ARS, the development will be served by a privately maintained road extending from Delta Drive. This is allowed per 49.15.920(f), as discussed in the staff report for ARP20200001. An easement for utilities, drainage, and driveway access on the parent lot is dedicated by the plat.

It is recommended the following plat note be added to the plat:

Plat note: ACCESS TO LOTS SHALL BE VIA ACCESS EASEMENTS SHOWN ON THIS PLAT AND IS SUBJECT TO THE REQUIREMENTS IN THE "[private common driveway access, utility, and maintenance agreement – edit title as appropriate**]" RECORDED WITH THIS SUBDIVSION.**

49.35.240 Table of Roadway Construction Standards – Delta Drive is a CBJ right-of-way constructed to CBJ standards and maintained by CBJ. The Capital Improvement Program (CIP) has designated funds for Fiscal Year 2020/2021 to reconstruct and improve Delta Drive. The plans for the reconstruction include new water and sewer mains, new drainage systems, resurfacing the street, and the addition of sidewalks on one side of the street. These improvements are planned to be completed by CBJ during the summer of 2021 (CSP20200009). Additional improvements by the developer to Delta Drive are not required.

Within the ARS, the privately maintained access road must be 20 feet in width and paved, and installed by the developer. The development is anticipated to generate 133 ADTs. A 20-foot wide paved roadway is adequate for the trips generated according to the Table of Roadway Construction Standards, see below [49.35.240].

Condition: Prior to the issuance of the first temporary certificate of occupancy, access to and within the development shall be paved.

49.35.240 Table of roadway construction standards excerpt:

ADTs	***TIA***	***Sidewalks***	***Travel Way Width***	***Street Lights***	***ROW Width***	***Paved***	***Publically Maintained***
0 to 211	*No*	*Not required*	*20 ft.*	*At intersection of subdivision streets and external street system.*	*60 ft. Public ROW**	*No, if outside the urban service area*	*No*

*49.15.920(f) allows for a privately maintained access road within the ARS.

Street Lighting – Street lighting is not required within the ARS. Delta Drive currently has street lighting.

Pedestrian Access – Delta Drive currently does not have sidewalks; however, sidewalks on one side of the street are planned through the CIP reconstruction project (CSP20200009). The access road within the ARS is not required to have sidewalks, according to the Table of Roadway Construction Standards [49.35.240].

Utilities – CBJ 49.15.920(g) requires that a master meter is installed on the parent-lot, and each unit-lot must be connected to water and sewer through the master meter. The parent lot is currently connected to public water and sewer. The applicant has submitted preliminary construction drawings showing each new unit-lot will be connected to public utilities through a master meter on the parent lot (Attachment C). The applicant has also submitted a preliminary water-line memo (Attachment D).

Once the preliminary plat is approved, the applicant is required to submit final construction drawings for review by CBJ Engineering & Public Works (E&PW). Because the parent-lot is currently connected to public utilities, additional work is not required before the applicant can receive final plat approval. It will be the responsibility of the Homeowners Association (HOA) to provide water and sewer to each unit-lot prior to the issuance of a Certificate of Occupancy or Temporary Certificate of Occupancy for each structure.

CBJ E&PW has reviewed the preliminary construction drawings and water line memo and finds that the proposed improvements conform to the requirements of Title 49 and can feasibility be constructed (Attachment F).

Condition: Prior to the issuance of the first temporary certificate of occupancy, each dwelling unit shall be connected to public sewer and water, and a master meter for water shall be installed by the developer.

Condition: Prior to approval of a final plat, the applicant shall submit a complete set of construction plans for all required improvements to the Community Development Department for review by the director of Engineering & Public Works for compliance with CBJ 49.35.140.

Plat Note: DOMESTIC WATER AND SANITARY SEWER DISPOSAL PROVIDED BY THE CITY AND BOROUGH OF JUNEAU PUBLIC UTILITIES.

Drainage – A preliminary drainage report and plan has been submitted, see Attachment C and E. The preliminary drainage plan demonstrates the drainage will be collected into drainage swales and underground storm drains, which connect to the existing drainage systems in Delta Drive. CBJ E&PW has reviewed the preliminary drainage report and construction drawings and finds that the preliminary drainage plan conforms to drainage and water quality requirements (Attachment F).

> **Condition: Prior to approval of the final plat, the developer shall submit a final drainage plan to be approved by CBJ Engineering & Public Works. This drainage plan must be prepared by an Alaskan licensed engineer in accordance with CBJ 49.35.510.**

Fire Code Improvements – According to the CBJ Fire Marshall, the proposed 20-foot-wide access road is adequate for emergency service response. No fire turnaround is required since the access road is a connected loop.

AGENCY REVIEW

CDD conducted an agency review comment period between October 15 and October 31, 2020. Comments from Engineering and Public works and Capital City Fire and Rescue are incorporated into this report. No additional comments were received.

PUBLIC COMMENTS

CDD conducted a public comment period between December 7 and December 21, 2020. Public notice was mailed to property owners within 500 feet of the subject parcel. A public notice sign was also posted on-site two weeks prior to the scheduled hearing. At time of writing this staff report, no public comments were received.

FINDINGS

Major Subdivision Preliminary Plat Approval Criteria - Per CBJ 49.15.402(c)(4), the director makes the following findings on the proposed development:

1. ***Does the preliminary plat comply with CBJ 49.15.411?***

   Analysis: No additional analysis needed.

   Finding: Yes. With recommended conditions listed below, the preliminary plat complies with preliminary platting requirements listed in CBJ 49.15.411.

2. ***Will applicable subdivision development standards be met, or can reasonably be met with conditions?***

   Analysis: The applicant is required to install a privately maintained access road, utilities, and drainage systems.

   Finding: Yes. With recommended conditions, applicable subdivision development standards can be reasonably met.

3. ***Will the proposed subdivision provide suitable building sites for the zoning district?***

   Analysis: Minimum lot dimensional requirements for the unit-lots created through this ARS are waived [49.15.920(c)]; the applicant has demonstrated adequate building sites are provided for an ARS in the D18 zoning district.

   Finding: Yes. The proposed subdivision provides building sites suitable for the D18 zoning district.

4. Will the proposed street names be unique or continuations of existing streets?

Analysis: No new street names are proposed. The CDD GIS Analyst will assign addresses from Delta Drive; the privately maintained street functions as an extension of Delta Drive.

Finding: Not applicable.

5. Has the director of Engineering and Public Works reviewed the application and determined that:

(i) The subdivision can be constructed to conform to applicable drainage and water quality requirements;

(ii) The streets, pioneer paths, and pedestrian ways as proposed accommodate anticipated traffic, align with, and, where appropriate, connect with streets and pedestrian ways serving adjacent properties;

(iii) Any proposed improvements conform to the requirements of this Title 49 and can be feasibly constructed; and,

(iv) Where public sewer is not required, the applicant has shown that soils are suitable for individual on-lot wastewater treatments and disposal or has shown the feasibility of alternative methods of wastewater disposal and treatment.

Analysis: CBJ E&PW has submitted a memorandum that demonstrates the above criteria can reasonably be met (Attachment F).

Finding: Yes. CBJ E&PW has reviewed the proposed subdivision application and supplemental materials, and finds the above criteria can be met.

RECOMMENDATION

Staff recommends the Planning Commission adopt the Director's analysis and findings and **APPROVE** the preliminary plat for the Delta Drive Subdivision, an Alternative Residential Subdivision creating 14 unit-lots and one (1) parent lot. This permit would allow the applicant to submit for the final plat.

This approval is subject to the following conditions:

1. Prior to approval of the final plat, Certification from the CBJ Treasurer is required showing that all real property taxes and special assessments levied against the property for the year of recording have been paid.
2. Prior to approval of a final plat, the applicant shall submit a complete set of construction plans for all required improvements to the Community Development Department for review by the director of E&PW for compliance with CBJ 49.35.140.
3. Prior to approval of the final plat, the developer shall submit a final drainage plan to be approved by CBJ Engineering & Public Works. This drainage plan must be prepared by an Alaskan licensed engineer in accordance with CBJ 49.35.510.
4. Prior to approval of the final plat, the applicant shall submit a revised preliminary plat with the following revisions:
    a. Add the following plat note:

i. ACCESS TO LOTS SHALL BE VIA ACCESS EASEMENTS SHOWN ON THIS PLAT AND IS SUBJECT TO THE REQUIREMENTS IN THE "[private common driveway access, utility, and maintenance agreement – edit title as appropriate]" RECORDED WITH THIS SUBDIVSION.

b. Show a five-foot perimeter buffer along the southwest lot line bordering Delta Acres Addition 1 Lot 8.

c. Include bearing labels for:
   i. The eastern lot line of Lot 6
   ii. The lot lines between lots 7 and 8 and 9 and 10

d. Per sheet C203, Grading Plan, a drainage easement should be added to the following locations:
   i. Eastern side of the development in the 10-foot perimeter buffer
   ii. Rear of Lot 11

5. Prior to the issuance of the first temporary certificate of occupancy, each dwelling unit shall be connected to public sewer and water, and a master meter for water shall be installed by the developer.
6. Prior to the issuance of the first temporary certificate of occupancy for the development, access to and within the development shall be paved.

STAFF REPORT ATTACHMENTS

Item	Description
Attachment A	Application Packet
Attachment B	Preliminary Plat and Closure Report
Attachment C	Preliminary Construction Drawings
Attachment D	Preliminary Water Memo
Attachment E	Preliminary Drainage Report
Attachment F	Memorandum from CBJ Engineering & Public Works
Attachment G	Abutters Notice and Public Notice Sign Photo

CITY AND BOROUGH OF JUNEAU
ALASKA'S CAPITAL CITY
COMMUNITY DEVELOPMENT

DEVELOPMENT PERMIT APPLICATION

NOTE: Development Permit Application forms must accompany all other Community Development Department land use applications.

To be completed by Applicant

PROPERTY LOCATION

Physical Address
4090 Delta Drive, Juneau, AK 99801

Legal Description(s) (Subdivision, Survey, Block, Tract, Lot)
Thunder Mountain Park TR 1A

Parcel Number(s)
5B2401620011

☐ This property located in the downtown historic district
☐ This property located in a mapped hazard area, if so, which _____

LANDOWNER / LESSEE

Property Owner	Contact Person
Bicknell, Inc.	David Blommer

Mailing Address	Phone Number(s)
P.O. Box 33517	
E-mail Address: dblommer@bicknellinc.com	907-789-5727

LANDOWNER/ LESSEE CONSENT Required for Planning Permits, not needed on Building/ Engineering Permits

I am (we are) the owner(s)or lessee(s) of the property subject to this application and I (we) consent as follows:

A. This application for a land use or activity review for development on my (our) property is made with my complete understanding and permission.
B. I (we) grant permission for officials and employees of the City and Borough of Juneau to inspect my property as needed for purposes of this application.

X _____ Landowner/Lessee Signature — Date 10/8/20

X _____ Landowner/Lessee Signature — Date _____

NOTICE: The City and Borough of Juneau staff may need access to the subject property during regular business hours and will attempt to contact the landowner in addition to the formal consent given above. Further, members of the Planning Commission may visit the property before the scheduled public hearing date.

APPLICANT (if not same as owner, enter "SAME")

Applicant	Contact Person
SAME	SAME

Mailing Address	Phone Number(s)
SAME	
E-mail Address: SAME	

X _____ Applicant's Signature — Date of Application _____

----------DEPARTMENT USE ONLY BELOW THIS LINE----------

RECEIVED
OCT 12 2020
PERMIT CENTER/CDD

Intake Initials
LEC

This form and all documents associated with it are public record once submitted.

INCOMPLETE APPLICATIONS WILL NOT BE ACCEPTED

For assistance filling out this form, contact the Permit Center at 586-0770.

Case Number	Date Received
SMP20200004	10/12/20

CITY AND BOROUGH OF JUNEAU
ALASKA'S CAPITAL CITY
COMMUNITY DEVELOPMENT

SUBDIVISION AND DEVELOPMENT PLAN APPLICATION

See subdivision hand-outs for more information regarding the permitting process and the materials required for a complete application.

NOTE: Must be accompanied by a DEVELOPMENT PERMIT APPLICATION form.

To be completed by Applicant

PROJECT SUMMARY

An alternative residential subdivision (ARS) of Thunder Mountain Park TR 1A into Delta Drive Subdivision comprised of 15 unit lots and 1 parent lot.

Number of Existing Parcels 1 Total Land Area 1.82 acres Number of Resulting Parcels 16

HAS THE PARCEL BEEN CREATED BY A MINOR SUBDIVISION IN THE PRECEDING 24 MONTHS

○ NO ○ YES Case Number _____

TYPE OF SUBDIVISION OR PLATTING APPROVAL REQUESTED

MINOR DEVELOPMENT (changing or creating 13 or fewer lots)	MAJOR DEVELOPMENT (changing or creating 14 or more lots)
○ Preliminary Plat (MIP)	⊗ Preliminary Plat (SMP)
○ Final Plat (MIF)	○ Final Plat (SMF)
○ Panhandle Subdivision	○ Preliminary Development Plan – PUD (PDP)
○ Accretion Survey	○ Final Development Plan – PUD (PDF)
○ Boundary Adjustment	○ Development Plan – ARS (ARP)
○ Lot Consolidation (SLC)	○ Development Plan – ARS (ARF)
○ Bungalow Lot Subdivision	○ Bungalow Lot Subdivision
○ Common Wall/Zero Lot Subdivision	○ Common Wall/Zero Lot Subdivision
○ Other _____	○ Other _____

ALL REQUIRED DOCUMENTS ATTACHED

- ☑ **Pre-application conference notes**
- ☑ **Narrative including:**
  - ☑ Legal description(s) of property to be subdivided
  - ☑ Existing structures on the land
  - ☑ Zoning district
  - ☑ Density
  - ☑ Access
  - ☑ Current and proposed use of any structures
  - ☑ Utilities available
  - ☑ Unique characteristics of the land or structure(s)
- ☑ **Preliminary Plat checklist**

----------DEPARTMENT USE ONLY BELOW THIS LINE----------

SUBDIVISION/PLATTING FEES	Fees	Check No.	Receipt	Date
Application Fees	$ 1760.00			
Public Notice sign ~~Admin. of Guarantee~~	$ 150.00	Fence Deposit		
Adjustment	$			
Total Fee	$ 1910.00			

major sub: $110 per lot x 16 lots

RECEIVED
OCT 12 2020
PERMIT CENTER/CDD

For assistance filling out this form, contact the Permit Center at 586-0770.

INCOMPLETE APPLICATIONS WILL NOT BE ACCEPTED

Case Number	Date Received
SMP20200004	10/12/20 LEC

PDC ENGINEERS

PLAN • DESIGN • CONSTRUCT

October 9, 2020

Laurel Christian, Planner II
City and Borough of Juneau
Community Development Department
155 S. Seward St.
Juneau, AK 99801

SUBJECT: Delta Drive Subdivision - Alternative Residential Subdivision
Project Narrative – PDC Project No. 20098JN

Dear Laurel;

On behalf of our client Bicknell Inc., PDC Engineers (PDC) is submitting this project narrative as part of the Delta Drive Subdivision Alternative Residential Subdivision (ARS) application. The property to be subdivided under the CBJ ARS code has a legal description of Thunder Mountain Park TR 1A with a land area of 79,189 square feet. Currently there are no dwelling structures on the property. Ten (10) existing concrete foundations exist on the property from where previous modular homes were located that have since been removed.

CBJ Zoning - The property is zoned D-18 Multifamily with an allowable density of 18 units per acre. The proposed use of the structures to be developed within the ARS will be residential and will meet the permissible uses as outlined for their zoning district and in the ARS code. The surrounding neighborhood is similarly zoned D-18 and is made up of single family and multi-family residences. The proposed development will be in harmony with the surrounding neighborhood.

Access - The existing parcel is accessed from the cul-de-sac at the end of Delta Drive, a CBJ owned and maintained paved roadway.

Utilities – CBJ public water and sanitary sewer utilities currently service the property. An existing 2-inch water line coming from the end of the existing 6-inch water line in Delta Drive supplies water to this property. Individual ¾" water services are located from the 2-inch line within the property serving the original 10 modular homes. A 6-inch PVC sanitary sewer line exists within the property acting as the sewer collector. This 6-inch sewer pipe connects to the CBJ sewer main located in the Delta Drive cul-de-sac. Individual 4-inch PVC sewer services coming from the building foundations connect to the 6-inch sewer. Under the CBJ Delta Drive Reconstruction project scheduled for construction in the Spring/Summer of 2021, new water and sanitary sewer utilities will be provided to the lot line of this property. An 8-inch PVC sewer service will be provided and an 8-inch HDPE water line. The Delta Drive Subdivision project will connect to these new services and extend into the subdivision. The existing sewer system has been found to be in good condition and will continue to be reused. Lots which previously did not have a 4-inch

Anchorage | Fairbanks | Juneau | Palmer | Soldotna
9109 Mendenhall Mall Road, Suite 4, Juneau, Alaska 99801
907.780.6060
www.PDCENG.com

RECEIVED
OCT 12 2020
PERMIT CENTER/CUD

sewer service will have a new ones installed. The subdivision has an existing 2" Poly water main serving the existing lots. PDC water system analysis (attached) indicates that the existing 2" water service can supply adequate flow and pressure to 7 dwelling units. There are two 2" Poly water line branches that will connect to the new 8" HDPE line. The existing 2" poly water line will be flushed, disinfected and pressure testing in compliance with CBJ Standards for domestic water supply. Existing ¾" water services will be used or new 1-inch Poly water services will be installed. A master water meter with vault structure will be installed prior to service lines.

Drainage – Surface storm water will be collected in drainage swales on the perimeter and interior lots of the property. The drainage system will involve construction of drainage swales, underground storm drain pipe and underdrain system to safely route the drainage to the existing Delta Drive drainage system which is planned for reconstruction in Spring/Summer 2021 by CBJ. As the designers for CBJ on the Delta Drive Reconstruction project, the storm drain improvements have been designed to accommodate the Delta Drive Subdivision storm drainage. There are two locations where storm drainage will discharge to Delta Drive, both of these locations have pipe sized at 12" diameter. Lots 11-15 will have a drainage swale near the rear of the property and then transition to an 8" underdrain in an existing 10' drainage easement that goes to a new culvert inlet being installed under the Delta Drive Reconstruction project. Lots 7-10 (new foundations) will be graded to drain to a drainage swale in the front of the lots where storm drainage will be collected and routed underground through a 12" drain pipe to the discharge location at the new culvert on Delta Drive. Lots 1-6 will have a perimeter drainage swale at the rear of the property that is graded to drain to the new culvert being installed under the CBJ Delta Drive Reconstruction project.

Parking and Circulation– Each lot will have two parking spaces as shown in the site plan. The existing gravel roadway will be reconstructed to accommodate a 20' wide paved access road through the property. This paved roadway will allow for safe and convenient emergency fire vehicle access throughout the subdivision.

Buffer/Setback – A perimeter buffer has been shown on the site plan with a new wooden fence located at the property line for screening and privacy. Buffers match the required setbacks for this zoning district.

Vegetative Cover – The parent lot has roughly 46% vegetative cover.

Lighting – Lighting will be installed on the individual structures.

Mailbox, Garbage and Snow Storage – CBJ Standard Mailboxes have been shown on Lot 1 to allow for each lot to have US Postal mail delivery. Two garbage dumpsters have been shown on Lot 1 to allow for refuse to be placed from each lot. Snow storage has been shown on Lot 1.

Should you have any questions or require any additional information, please do not hesitate to contact me at your convenience.

Sincerely,

J. Mark Pusich

J. Mark Pusich, PE
Principal | Civil/Structural Engineer
PDC Engineers

Attachments: ARS Application: CBJ Development Application, ARS Subdivision Preliminary Plat, Lot Closure Comps, Subdivision Application, Preliminary Plat Checklist, Pre-App meeting minutes, Construction Improvement Drawings

CITY AND BOROUGH OF JUNEAU
ALASKA'S CAPITAL CITY
COMMUNITY DEVELOPMENT

(907) 586-0715
CDD_Admin@juneau.org
www.juneau.org/CDD
155 S. Seward Street • Juneau, AK 99801

Delta Drive Alternative Residential Subdivision

Case Number: PAC20200026
Applicant: Spike Bicknell & David Blommer

Property Owner: Delta Park LLC

Property Address: 4090 Delta Drive

Parcel Code Number: 5B2401620011

Site Size: 79,189 Square Feet

Zoning: D-18

Existing Land Use: Manufactured Homes

Conference Date:	4/29/20
Report Issued:	**05/06/20**
List of Attendees	

Note: Copies of the Pre-Application Conference Report will be emailed, instead of mailed, to participants who have provided their email address below.

Name	Title	Email address
David Blommer	Applicant	dblommer@bicknellinc.com
Laurel Christian	Planning	Laurel.christian@juneau.org
Kyle Paw	Permit staff	Kyle.paw@juneau.org
Autumn Sapp	General Engineering	Autumn.Sapp@juneau.org
Mark Pusich	PDC	MarkPusich@pdceng.com

Conference Summary

Questions/issues/agreements identified at the conference that weren't identified in the attached reports. The following is a list of issues, comments and proposed actions, and requested technical submittal items that were discussed at the pre-application conference.

The Alternative Residential Subdivision (ARS) requires a two-step approval process. The ARS preliminary plan is reviewed the and then then ARS final plan is reviewed. A major subdivision application is also required. The applicant may apply for the preliminary ARS plan and preliminary major subdivision plat at the same time.

The preliminary ARS plan is reviewed through the conditional use permit process with additional requirements found in the ARS section of code. The major subdivision plat is reviewed for platting requirements. The ARS section of code is attached to this report, approval criteria are highlighted.

Planning Division

1. **Zoning** – D18 Zoning District. There is no minimum lot size for the unit lots, however; you should demonstrate on the plan their size, and show how large the parent parcel is. CBJ 49.80 Definitions for Parent Lot and Unit Lot:

   Parent lot means the original lot and the residual area from which unit-lots are created through an alternative residential subdivision.

   Unit-lot means any lot, site, parcel, unit-site, and similar geographically defined property that is created through an alternative residential subdivision and that is substantially smaller than the minimum lot size required for the zoning district

2. **Setback/buffer** – There are no setbacks for the unit lots. A perimeter buffer is required in lieu of the setback requirements of this title on the parent lot. The buffer shall not be less than the setbacks required for the zoning district. Setbacks for the D18 zoning district are: Front: 20'; Rear: 10'; Side: 5'; Street side:13'

   a. The commission may enlarge the required buffer to up to 25 feet.

   b. The buffer shall be vegetated unless the commission requires non-vegetated screening. A buffer may include fencing, natural berm, or other similar features.

   c. No parking areas, dwelling units, unit-lots, or permissible uses may be located within the perimeter buffer. Access to the development may cross a portion of the buffer.

3. **Height** – 35' primary uses; 25' accessory uses

4. **Parking & Circulation** – Each single-family dwelling requires 2 parking spaces. Residential parking lots with more than 10 parking spaces but fewer than 25 parking spaces require 1 ADA van accessible parking space.

   a. Parking can be either on the unit lots or on the parent lot. On the ARS plan, parking areas should be shown.

5. **Access** – Access to the ARS must be publically maintained (Delta Drive is a publically maintained right-of-way). Access within the ARS must be located completely on the parent lot, be paved, and meet emergency service access requirements.

6. **Lot Coverage** – There is no maximum lot coverage for the unit lots, maximum lot coverage applies to the parent lot. The maximum lot coverage is 50%.
7. **Vegetative Coverage** – There is a minimum vegetative cover requirement for the parent lot. In the D18 zoning district, 30% vegetative cover is required.
    a. Shared open space is not required for an ARS in the D18 zoning district.
8. **Density** – Site measures 79,189 square feet (1.8 acres). At 18 units per acre, the site could accommodate up to 32 dwelling units.
    a. **Density bonuses** – The commission may award a density bonus to an ARS for enhancements to the development. For the D18 zoning district, the total bonus shall not exceed 25%. Applicant should state in the project narrative if they are requesting density bonuses and how they meet the enhancement criteria.
9. **Lighting** – In the project narrative, the applicant should discuss if lighting will be installed.
10. **Noise** – Noise is not expected to be out of character with the D18 residential zoning district.
11. **Flood** – NA
12. **Hazard/Mass Wasting/Avalanche/Hillside Endorsement** – No Known
13. **Wetlands** – No Known
14. **Habitat** – (Eagle – remind applicant to check with Feds; Riparian, etc.) – No Known
15. **Plat or Covenant Restrictions** – No known
16. **Traffic** – Per CBJ 49.40.300 a traffic impact analysis is required for projects that are anticipated to generate more than 500 average daily trips (ADTs). A single-family dwelling generates 9.52 ADTs. The proposal of 14 lots for single-family dwellings would generate 133.28 ADTs. A TIA will not likely be required for this project.
17. **Homeowners Association** – The ARS requires that a HOA be formed. The HOA documents must be recorded with the final plat.

Building Division

18. **Building** - plans will be addressed in plan review
19. **Outstanding Permits** -

	Permit Application	Pstatus	Permit Type	Location	Permit Id	Purpose
1	BLD20130336	Issued	BMH	4090 DELTA DR	2000993	Place 10 manufactured homes on existing foundations

General Engineering/Public Works

20. **Engineering** –
    a. **Easements:** Site plan shall include all easements for drainage, utility lines including plumbing lines, access, snow storage, trash (dumpster) storage, or any other shared use that requires crossing the property line.
    b. **Agreements:** A maintenance and hold harmless (of CBJ) agreement will need to be drafted, signed, and recorded for all shared infrastructure for the development, e.g. driveway, water, sewer, etc.

21. **Drainage** – Submit a drainage plan indicating how drainage from the proposed subdivision will join an established drainage channel or channels. Easements must be provided on the plat for all established drainage ways or any proposed drainage ways that cross any current or future abutting property lines.

22. **Utilities** – (water, power, sewer, etc.) A master water meter shall be installed by the developer prior to any branches or services. The meter must be in an above ground heated space. Water and sewer sizing shall be determined by an Alaskan licensed civil or mechanical engineer.

    Beyond the shared private main and master water meter, a minimum of 1" water service and 4" sewer service will need to be installed to the front property line of each newly created lot prior to the recording of the final plat. At the time of preliminary plat submittal, please submit a construction plan with for the new utilities. The plan needs to include pipe locations, sizing, and grades for sewer to indicate appropriate fall will be achieved. Existing water services not being utilized shall be decommissioned and removed back to the mainline. If utilizing existing services or branches please show their location, size, and material type on the plan.

    If a new private water and/or sewer mains are to be installed within the ROW, the following permits will need to be obtained to provide utilities to the newly created lot:

    a. **CBJ right-of-way (ROW) permit**- Once the construction plan for the utilities is approved, CBJ will create the ROW permit. The permit will allow the tapping of the water and sewer mains, water and sewer service installation, and road restoration within the right-of-way. Inspection fees, refundable bond amount, and conditions will be determined after review of the proposed construction plan. The extension of the utilities within the property will require further permitting and fee assessments. This process is done separately from the subdivision and typically in conjunction with the building permit application.

    b. **CBJ Water and Sewer Utility permits** – The installation of the private water and sewer main lines, services, and the water meter within the private property will be covered by these utility permits.

Fire Marshal

23. **Fire Items/Access** –

List of required applications

Based upon the information submitted for pre-application review, the following list of applications must be submitted in order for the project to receive a thorough and speedy review.

1. ARS Preliminary Plan Approval Application
2. Major Subdivision Application (Required when the subdivision plat is submitted)
3. Development Permit Application

Additional Submittal Requirements

Submittal of additional information, given the specifics of the development proposal and site, are listed below. These items will be required in order for the application to be determined Counter Complete.

1. A copy of this pre-application conference report.

2. Preliminary Plat Checklist (Required when the subdivision plat is submitted)
3. Please see 49.15.940(b) for a description of the Required submissions with an ARS Preliminary Plan Approval:
    a. Ownership
    b. Preliminary Development Plan
    c. Design
    d. Open space, common facilities, and general landscaping
    e. Request for density bonuses (if applicable)
    f. Description of phased development (if applicable)
4. As built survey of existing foundations if you plan to utilize them.

Fee Estimates

The preliminary plan review fees listed below can be found in the CBJ code section 49.85.

Based upon the project plan submitted for pre-application review, staff has attempted to provide an accurate estimate for the permits and permit fees which will be triggered by your proposal.

1. ARS Review Fee
    a. Preliminary Plan – $400.00 plus $80.00 per residential unit
    b. Final Plan - $300.00 plus $60.00 per residential unit
    c. Public notice sign fee $50 plus $100 refundable deposit
2. Major Subdivision Review Fee
    a. Preliminary Plat - $110 per lot
    b. Final Plat - $70 per lot
    c. Public notice sign fee $50 plus $100 refundable deposit
3. ROW Permit (work within the ROW):
    a. $10 permit fee
    b. Inspection fees - $60 per inspection trip or hour, will be determined at time of construction plan review
    c. Refundable bond – will be determined at time of construction plan review. Can be paid in the form of cash, check, surety, or conveyance.
    d. Bond fee – dependent on type of bond payment.

1. Water Utility Permit (work within private property):
    a. Water Connection charge – based on the line size at the location of the water meter as determined by an Alaskan licensed civil engineer.
2. Sewer Utility Permit (work within private property):
    a. Sewer Connection charge – based on the number of drainage fixture units and shall be supplied in the civil construction plans as determined by an Alaskan licensed civil engineer.

b. $60.00 per inspection or trip, will be determined at time of construction plan review.

For informational handouts with submittal requirements for development applications, please visit our website at www.juneau.org/cdd.

Submit your Completed Application
You must submit your application(s) in person with payment made to:

City & Borough of Juneau, Permit Center
230 South Franklin Street
Fourth Floor Marine View Center
Juneau, AK 99801

Phone: (907) 586-0715
Fax: (907) 586-4529
Web: www.juneau.org/cdd

PRELIMINARY PLAT CHECK LIST

Name of Proposed Subdivision: Delta Drive Subdivision

The following items must be included with the initial submittal of a Preliminary Plat:

- ☒ Application, filled out completely
- ☐ Application fee (see fee schedule)
- ☒ Project Narrative
- ☐ Five (5) – 24" by 36" Copies
- ☒ Pre-application Conference Report
- ☒ Lot Closure Report
- ☒ Disclosure of all known environmental hazards and any proposed mitigation measures recommended in the applicable environmental document.
- ☐ Preliminary Plat Checklist: I have reviewed the checklist and all submittals for completeness and accuracy.

_____ _____

Applicant or Surveyor - Signature Date

_____

Applicant or Surveyor - Print Name

GENERAL REQUIREMENTS

- ☐ The preliminary plat shall be prepared by a professional land surveyor, registered in the State of Alaska
- ☐ The preliminary plat shall be submitted on 22 by 34 inch sheets. The director of engineering and public works may approve alternate sheet sizes
- ☐ The preliminary plat shall be drawn with black ink to a scale of one-inch to 100 feet or less, or other suitable scale approved by the director of engineering and public works
- ☐ The preliminary plat shall be oriented with north toward the top of the sheet.
- ☐ A vicinity map shall be located in the upper right-hand corner of the sheet
- ☐ The vicinity map shall be oriented in the same direction as the plat
- ☐ A suitable north arrow shall be shown for the plat and vicinity map
- ☐ All line work and lettering must be of professional quality, and all line widths and lettering sizes must be of such size that all information can be clearly shown without overlap or confusion

GRAPHIC REQUIREMENTS - A preliminary plat shall contain the following information:

Title block - An enclosed title block in the lower right-hand corner containing the following information:

- ☐ The proposed name of the subdivision
- ☐ The legal description of the parcel to be subdivided including U.S. Survey, U.S. Mineral Survey, A.T.S. number or section, township, and range number, as applicable
- ☐ "City and Borough of Juneau, Alaska"
- ☐ "State Recorder's Office at Juneau"
- ☐ The date the preliminary plat was prepared and revised
- ☐ The horizontal scale
- ☐ The name and address of the owner of record
- ☐ The name, address, and telephone number of the surveyor preparing the preliminary plat

Preliminary Plat Checklist
Updated 1/2018
Page 2 of 5

Lot, block, and street information:

- ☑ The area of each lot
- ☑ The dimensions in feet and hundredths of a foot
- ☑ An identifying number and letter for lots and blocks
- ☑ Lots numbered consecutively, commencing with the number "1," with no omissions or duplications
- ☑ If the remainder of an original parcel being subdivided is relatively large, it shall be designated as a "tract" with an identifying number
- ☑ All parcels of land intended to be dedicated for public use or reserved for the use of all of the property owners in the proposed subdivision shall be shown as lots, and consecutively numbered. The purpose and any conditions or limitations on the use of the parcel shall be noted on the plat
- ☑ Abutting properties shall be shown with dashed lines, numbers, and/or letters
- ☑ For resubdivisions or public way vacations, the lines and legal description of the previous lots shall be shown with light dashed lines, numbers, and/or letters, or by a separate plat on the same sheet showing the previous lot lines
- ☑ The minimum data shown for each curve shall be as follows:
  - ☐ Length
  - ☐ Central angle
  - ☐ Radius
  - ☐ Bearing and distance of long chord
- ☐ Setbacks shall be shown on all corner lots and any lots with multiple frontage. Setbacks shall be shown on typical lots

Boundary lines:

- ☑ All boundary lines of the subdivision with bearings and distances described
- ☑ All retraced boundary lines shall show record and measured bearings and distances where they differ. Record dimension information shall be shown within parentheses and include a record source identification
- ☑ The exterior boundary lines of the subdivision shall be a solid black opaque line that is of a width that distinguishes it from all other property lines shown on the plat
- ☐ If phasing is proposed, then the boundaries and number of each phase, sequential lot numbering, and a subdivision name consistent with previous phases shall be shown

Monumentation:

- ☑ The monuments used to establish the basis of bearing
- ☑ Each monument found or set shall be identified on the plat by a symbol
- ☑ A complete description of the monument, including type and all information printed on the cap. A typical drawing shall be shown for each type of monument cap set
- ☑ A legend showing the symbols for all the types of monuments
- ☑ The identification, description location, elevation, and datum of the benchmark used to establish vertical control

Site access, circulation, and utilities:

- ☑ The widths and names of existing rights-of-way within the subdivision and within 100 feet of the subdivision boundary
- ☐ Proposed rights-of-way, including their widths and proposed names
- ☐ The grades of existing and proposed streets within these rights-of-way
- ☐ The width, ownership, use, and record reference of all proposed and existing easements within the subdivision and within 100 feet of the subdivision boundary
- ☐ The width, ownership, and use of all proposed easements

- ☒ All proposed and existing easements shall have sufficient dimensions shown to determine their location on the ground
- ☐ Existing trails or pathways within the subdivision and within 100 feet of the subdivision boundary, including the width of any associated rights-of way or easements
- ☐ Proposed trails or pathways and widths of their rights-of-way
- ☐ If the plat submitted covers only a part of the tract under the control of the applicant, a sketch plat of the prospective street system of the unplatted part shall be submitted
- ☒ The location of any existing or proposed driveways/curb cuts that access or are proposed to access any existing or proposed street

Topographic information:

- ☒ For slopes of less than five percent, show one foot contour lines and include spot elevations at all breaks in grade, along all drainage channels or swales, and at selected points not more than 100 feet apart in all directions
- ☐ For slopes between five percent and ten percent, show two foot contour lines
- ☐ For slopes greater than ten percent, show five foot contour lines
- ☒ Every fifth elevation contour shall be distinctive and clearly labeled
- ☒ Dashed lines shall represent existing contours
- ☒ Mapping shall include any significant features which can materially affect the design of the subdivision, including, but not limited to, structures, fences, walls, and utility poles
- ☒ If irregular slopes or special features are present, additional contour information may be required by the director of engineering and public works for planning or construction purposes. Additional required information may include projecting the topography of the site after grading has taken place, showing such items as:
  - ☐ Pad elevations and drainage patterns for each lot
  - ☐ Tops and toes of all manufactured slopes, including daylight lines
  - ☐ Existing and proposed retaining wall locations and heights
- ☐ For subdivisions located in hillside areas with slopes greater than eighteen percent, additional requirements apply in accordance with CBJ 49.70, Article II

Sewer and water:

- ☑ Existing sewer and water mains within the tract with pipe sizes and grades
- ☑ A draft plan for proposed water and sewer lines showing the size, approximate slope, and connection points with elevations for the purpose of determining the feasibility of construction

Multisheet plats:

- ☐ When a plat requires more than one sheet, exclusive of a certificate sheet, an index sheet shall be included. When a plat requires more than three sheets, a cover sheet shall also be included, showing the subdivision title, a key map, and all certificates. Each additional sheet shall include the following data:
  - ☐ North arrow
  - ☐ Legend
  - ☐ Surveyor's seal and signature
  - ☐ Title block
  - ☐ Sheet _____ of _____
  - ☐ Scale
  - ☐ All plat notes
  - ☐ Vicinity map

N/A

ADDITIONAL MAPPING OR REPORTS- *At the pre-application meeting, it will be determined if any of the following additional mapping or reports are required to be submitted with the preliminary plat. If required, the following additional mapping or reports shall be submitted:*

Hazard and Special Habitat Areas:

- ☐ Any portion of a special flood hazard area, landslide or avalanche area, habitat area as defined by CBJ 49.70.310, or watersheds, either existing at the proposed subdivision site or shown on the overlay maps, adopted pursuant to this title, to exist at the proposed subdivision site, must be depicted on the preliminary plat
- ☐ The boundaries of any wetland areas must be depicted on the preliminary plat. Boundaries must be determined by a person qualified to perform wetland delineations N/A

Soils report:

- ☐ A soils report prepared by an engineer licensed by the State of Alaska shall be required if the proposed subdivision is located farther from the existing public sewer system than specified in CBJ 49.35, and the applicant chooses to provide on-lot waste disposal rather than to connect to the public system. A soils report shall include the following:
  - ☐ Certification that the proposed lots are large enough and have soil of sufficient permeability to permit the construction of approved waste treatment systems for on-lot waste disposal
  - N/A ☐ The location and size of drain fields for each lot
  - ☐ The locations and logs of test borings, percolation test results, and a hydrological evaluation of on-site sewage disposal
  - ☐ If the soils report indicates that the soils found on the site are not of sufficient permeability or the lots are not large enough to permit the construction of systems for on-lot waste disposal, the size of the proposed lots must be increased or alternate methods for waste disposal proposed
  - ☐ The soils report shall describe the nature of the subsurface soils and any soil conditions that would affect the design of the proposed development. The soils report shall state whether the proposed subdivision plan is feasible and provide general solutions for all known geotechnical conditions or problems

Drainage report:

- ☐ A preliminary report specifying the method by which the applicant proposes to manage surface and subsurface drainage for the subdivision and the effect of such method on adjacent areas. Unlike the drainage plan required by CBJ 49.35.510, the preliminary drainage report does not need to be prepared by a licensed engineer. The report must address the following:
  - ☐ A calculation of the increase in stormwater runoff resulting from the proposed development as well as the runoff from all drainage areas associated with the site. Runoff calculations shall be based on a fully-developed subdivision and a 25-year storm event
  - ☐ How drainage from the proposed subdivision will join an established drainage channel or channels, unless the director of engineering and public works approves use of an alternative drainage way
  - ☐ An evaluation of existing drainage ways and structures located between the subdivision and the receiving water body, and verification that the existing drainage ways can accommodate the increased runoff. If the increased runoff cannot be handled, the plan must propose solutions to the problem
  - ☐ All required improvements, on or off site, that are shown on the construction plans in accordance with CBJ 49.35, Article V, and that will be constructed as part of the subdivision

Water:

- ☐ For subdivisions of five or more lots, including major subdivisions, the following shall be included, where applicable, in accordance with CBJ 49.15.412:
  - ☐ If a proposed subdivision is located at greater distance from the existing public water system than specified in CBJ 49.35, Article III, and the applicant chooses not to connect to the public system, a statement that the applicant will provide a community water system or that individual wells will be used

- ☐ A report by a registered engineer or geologist that clearly supports the legal and physical availability of adequate water. Methods for proof of water availability and the standards for quantity are listed in CBJ 49.35, Article III
- ☐ A copy of the State application for a permit to appropriate water in the quantity required to meet the subdivisions demands

☐ This does not apply to remote subdivisions unless: the subdivider of the remote subdivision chooses to provide potable water, a public water system is available and the subdivision falls within the criteria outlined in CBJ 49.35.310(a), or the subdivision has four or fewer lots.

☐ The director for minor subdivisions, and the planning commission for major subdivisions, may, for good cause, temporarily waive the requirement to provide a water report and proof of water, and condition the approval of the preliminary plat upon the provision of both documents as part of the final plat application and approval process.

Erosion control:

☐ A report explaining the method by which the applicant proposes to control erosion and manage runoff, and potential impacts to adjacent properties or water bodies. The report shall include a plan for preservation of ground cover in areas where runoff and resulting erosion need to be minimized.

Traffic study:

☐ A traffic impact analysis may be required with the preliminary plat in accordance with CBJ 49.40.300.

Shadow plats:

N/A ☐ For subdivisions of five or more lots in transition areas, a shadow plat shall be submitted according to CBJ 49.70.710. The shadow plat shall consist of a sketch superimposed on the proposed subdivision layout. This sketch shall reflect any future resubdivision of the parcels into smaller lots consistent with the higher density and the lot size allowed under the transition zoning.

GENERAL NOTES

1. ALL BEARINGS SHOWN ARE TRUE BEARINGS AS ORIENTED TO THE BASIS OF BEARING AND DISTANCES SHOWN ARE REDUCED TO HORIZONTAL FIELD DISTANCES.
2. THE ERROR OF CLOSURE OF THIS SURVEY DOES NOT EXCEED 1:10,000.
3. BASIS OF BEARING
   THE BASIS OF BEARING FOR THIS PLAT IS THE BEARING OF S 0° 01' 00" W, AS SHOWN ON PLAT No. 73-17, DATED OCTOBER 29, 1973, BETWEEN THE RECOVERED MONUMENTS, AS SHOWN ON THIS PLAT.
4. WHERE RECORD SURVEY COURSES (BEARINGS AND/OR DISTANCES) DIFFER FROM THAT OF ACTUAL FIELD MEASURED AND/OR COMPUTED SURVEY COURSES, THE RECORD BEARING AND/OR DISTANCES IS SHOWN WITHIN PARENTHESIS AND REFERENCED TO A RECORDED PLAT (R#).
5. THE PRELIMINARY FIELD SURVEYING WAS PERFORMED ON MAY 26-27, 2020, UTILIZING A TRIMBLE S7 ROBOTICS TOTAL STATION WITH STANDARD LASER RANGING MEASUREMENTS.
6. RECORD INFORMATION
   THE RECORD INFORMATION USED FOR THIS SUBDIVISION IS DERIVED FROM THE OFFICIAL PLATS: PLAT No. 73-17, JUNEAU RECORDING DISTRICT, DATED OCTOBER 29, 1973 (R1), PLAT No. 92-18, JUNEAU RECORDING DISTRICT, DATED APRIL 28,1992 (R2);
7. ALL DISTANCES ARE MEASURED IN U.S. SURVEY FEET, AND HAVE BEEN REDUCED TO THEIR HORIZONTAL EQUIVALENTS.
8. DOMESTIC WATER AND SANITARY SEWER DISPOSAL PROVIDED BY THE CITY AND BOROUGH OF JUNEAU PUBLIC UTILITIES.
9. THE LOTS CREATED THROUGH THIS SUBDIVISION ARE AN ALTERNATIVE RESIDENTIAL SUBDIVISION. AT TIME OF PLAT RECORDING DEVELOPMENT OF LOTS, INCLUDING FURTHER SUBDIVISION OR USE, IS SUBJECT TO CBJ 49.15 ARTICLE IX. SEE CITY AND BOROUGH OF JUNEAU LAND USE CODE FOR CURRENT REGULATIONS.
10. THERE SHALL BE NO DISTURBANCE OR DEVELOPMENT WITHIN THE PERIMETER BUFFER SHOWN ON THIS PLAT, AS REQUIRED BY CBJ 49.15.920(j).
11. AT TIME OF RECORDING, LOTS 2 THROUGH 11 AND 13 THROUGH 15 ARE LIMITED TO ONE SINGLE FAMILY DWELLING. LOT 12 MAY BE PERMITTED ONE SINGLE FAMILY DWELLING AND ONE ACCESSORY APARTMENT. SEE CBJ 49.15 ARTICLE IX FOR CURRENT REGULATIONS.

EASEMENT NOTE

A BLANKET EASEMENT ACROSS LOT 1 FOR UTILITIES, DRAINAGE AND DRIVEWAY ACCESS IS DEDICATED BY THIS PLAT.

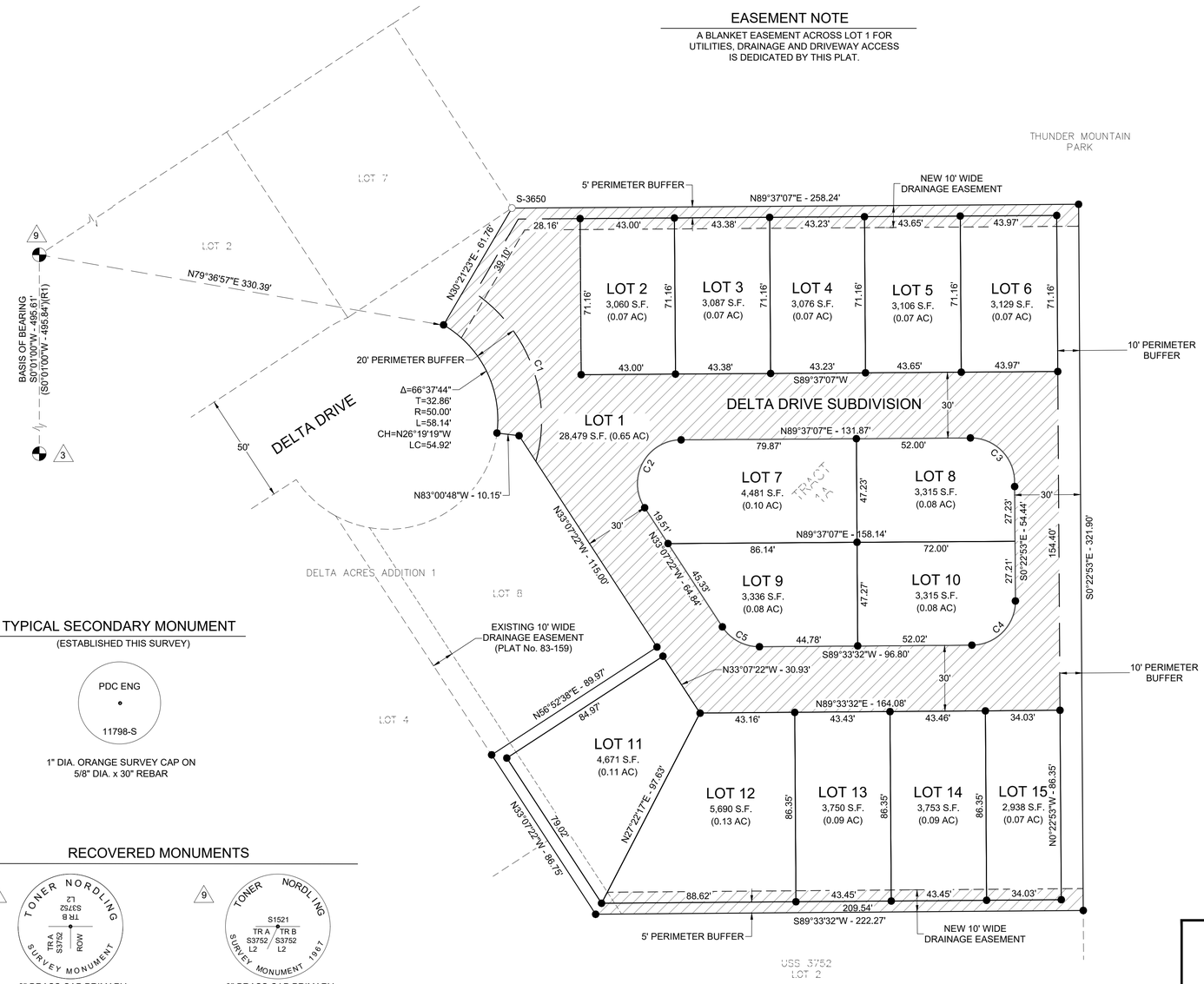

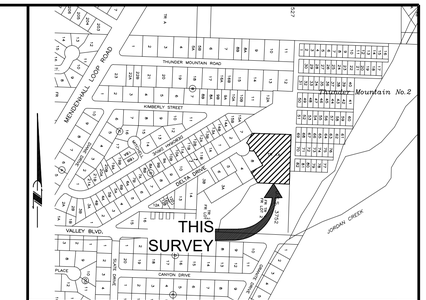

VICINITY MAP

SOURCE: CBJ PROPERTY ATLAS

SCALE: 1"= 500'

LEGEND

- PRIMARY MONUMENT (RECOVERED)
- SECONDARY MONUMENT (RECOVERED)
- SECONDARY MONUMENT (ESTABLISHED)
- SURVEYED LINE
- UNSURVEYED LINE
- EASEMENT LINE
- NEW EASEMENT LINE
- (R1) PLAT No. 73-17, JRD
- (R2) PLAT No. 92-18, JRD
- ACCESS, UTILITY & DRAINAGE EASEMENT
- PERIMETER BUFFER

OWNERSHIP CERTIFICATE

BICKNELL, INC. HEREBY CERTIFIES THAT BICKNELL, INC. IS THE OWNER OF THE PROPERTY SHOWN AND DESCRIBED HEREON AND THAT IT HEREBY ADOPTS THIS PLAT OF SUBDIVISION WITH ITS FREE CONSENT, AND DEDICATE ALL STREETS, ALLEYS, WALKS, PARKS AND OTHER OPEN SPACES TO PUBLIC OR PRIVATE USE AS NOTED:

OWNER _____ DATE: _____ 2020
ROSCOE V. BICKNELL, IV
BICKNELL, INC.

NOTARY ACKNOWLEDGMENT

UNITED STATES OF AMERICA)
) SS
STATE OF ALASKA)

THIS IS TO CERTIFY THAT ON THIS_____ DAY OF _____, 2020, BEFORE ME, THE UNDERSIGNED A NOTARY PUBLIC IN AND FOR THE STATE OF ALASKA, DULY COMMISSIONED AND SWORN, PERSONALLY APPEARED _____ TO ME KNOWN TO BE THE PERSONS DESCRIBED IN AND WHO EXECUTED THE ABOVE AND FOREGOING INSTRUMENT, AND ACKNOWLEDGED TO ME THAT THEY SIGNED AND SEALED THE SAME FREELY AND VOLUNTARILY FOR THE USES AND PURPOSES THEREIN MENTIONED.
WITNESS MY HAND AND OFFICIAL SEAL THE DAY AND YEAR IN THIS CERTIFICATE FIRST ABOVE WRITTEN.

_____
NOTARY PUBLIC FOR ALASKA

MY COMMISSION EXPIRES: _____

PLANNING COMMISSION PLAT APPROVAL

I HEREBY CERTIFY THAT THE SUBDIVISION PLAT SHOWN HEREON HAS BEEN FOUND TO COMPLY WITH THE SUBDIVISION REGULATIONS OF THE CITY AND BOROUGH OF JUNEAU, ALASKA AND THAT SAID PLAT HAS BEEN APPROVED BY THE PLANNING COMMISSION BY PLAT RESOLUTION NO. _____, DATED _____, 2020 , AND THAT THE PLAT SHOWN HEREON HAS BEEN APPROVED FOR RECORDING IN THE JUNEAU RECORDING DISTRICT, STATE RECORDERS OFFICE AT ANCHORAGE.

_____
CHAIRMAN OF THE PLANNING COMMISSION
CITY AND BOROUGH OF JUNEAU

DATED _____, 2020

ATTEST:

_____
MUNICIPAL CLERK
CITY AND BOROUGH OF JUNEAU

TYPICAL SECONDARY MONUMENT

(ESTABLISHED THIS SURVEY)

1" DIA. ORANGE SURVEY CAP ON 5/8" DIA. x 30" REBAR

RECOVERED MONUMENTS

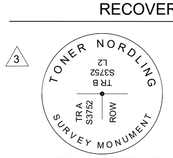

3" BRASS CAP PRIMARY
GOOD CONDITION
1.5' BELOW GRADE

3" BRASS CAP PRIMARY
GOOD CONDITION
FLUSH WITH GRADE

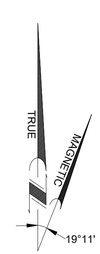

SOURCE: N.O.A.A.
MAGNETIC DECLINATION 19°11'E
NOVEMBER 14, 2017 CHANGING BY
0°17' W/YEAR

CURVE TABLE					
CURVE #	LENGTH	DELTA	RADIUS	CHORD BEARING	CORD DISTANCE
C1	87.15'	71° 20' 01"	70.00'	N19° 52' 32"W	81.63'
C2	42.84'	122° 44' 29"	20.00'	S28° 14' 53"W	35.11'
C3	31.42'	90° 00' 00"	20.00'	N45° 22' 53"W	28.28'
C4	31.40'	89° 56' 25"	20.00'	N44° 35' 20"E	28.27'
C5	20.01'	57° 19' 06"	20.00'	S61° 46' 55"E	19.18'

30' 0 15' 30' 60'
SCALE: 1"=30'

SURVEYOR'S CERTIFICATE

I, CRAIG O. RANSON, IN MY CAPACITY AS A PROFESSIONAL LAND SURVEYOR REGISTERED IN THE STATE OF ALASKA, CERTIFY THAT THIS PLAT REPRESENTS THE SURVEY MADE BY ME OR UNDER MY DIRECT SUPERVISION, THAT THE ACCURACY OF THE SURVEY IS WITHIN THE LIMITS REQUIRED BY TITLE 49 OF THE CODE OF THE CITY AND BOROUGH OF JUNEAU, THAT ALL DIMENSIONS AND RELATIVE BEARINGS ARE CORRECT AND THAT MONUMENTS ARE SET IN PLACE AND NOTED UPON THIS PLAT AS PRESENTED.

DATE: 12/04/20

STATE OF ALASKA 49TH
CRAIG O. RANSON
LS 11798
REGISTERED PROFESSIONAL LAND SURVEYOR

PDC ENGINEERS
PLAN • DESIGN • CONSTRUCT
A RESPEC COMPANY
9109 Mendenhall Mall Rd. Ste. 4, Juneau, AK 99801
907.780.6060 | AECC605

A PLAT OF
DELTA DRIVE SUBDIVISION
A SUBDIVISION OF
THUNDER MOUNTAIN PARK TRACT 1A
WITHIN U.S. SURVEY NO. 3752
WITHIN CITY AND BOROUGH OF JUNEAU, ALASKA
JUNEAU RECORDING DISTRICT

STATE RECORDER'S OFFICE AT ANCHORAGE

OWNER:
BICKNELL, INC.
P.O. BOX 33517
JUNEAU, AK 99803

SURVEYOR:
PDC ENGINEERS
9109 MENDENHALL MALL ROAD SUITE 4
JUNEAU, ALASKA 99801
(907) 780-6060

DATE: December 04,2020 SCALE: 1"=30' SHEET 1 OF 1 PDC PROJ. No. 20098JN

SMP20200004/ARP20200001

P:\2020\20098JN-Bicknell_Delta\LV\001\dwg\20098JN_PLAT Dec 04, 2020- 10:05 AM

Parcel Map Check Report

Parcel Name: Delta Drive Subdivision - Lot 1
Description:
Process segment order counterclockwise: False
Enable mapcheck across chord: False

North:10,010.3222'	East:10,349.3290'

Segment# 1: Curve

Length: 58.145'	Radius: 50.000'
Delta: 66.6288 (d)	Tangent: 32.862'
Chord: 54.923'	Course: N26° 19' 19.00"W
Course In: N83° 00' 27.08"W	Course Out: N30° 21' 49.08"E
RP North: 10,016.4091'	East: 10,299.7009'
End North: 10,059.5508'	East: 10,324.9752'

Segment# 2: Line

Course: N30° 21' 23.00"E	Length: 61.760'
North: 10,112.8435'	East: 10,356.1873'

Segment# 3: Line

Course: N89° 37' 07.00"E	Length: 258.240'
North: 10,114.5624'	East: 10,614.4216'

Segment# 4: Line

Course: S0° 22' 53.00"E	Length: 321.900'
North: 9,792.6696'	East: 10,616.5643'

Segment# 5: Line

Course: S89° 33' 32.00"W	Length: 222.270'
North: 9,790.9584'	East: 10,394.3009'

Segment# 6: Line

Course: N33° 07' 22.00"W	Length: 86.750'
North: 9,863.6116'	East: 10,346.8977'

Segment# 7: Line

Course: N56° 52' 38.00"E Length: 89.970'
North: 9,912.7744' East: 10,422.2477'

Segment# 8: Line
Course: N33° 07' 22.00"W Length: 115.000'
North: 10,009.0870' East: 10,359.4077'

Segment# 9: Line
Course: N83° 00' 48.00"W Length: 10.154'
North: 10,010.3222' East: 10,349.3291'

Perimeter: 2,929.504' Area: 28,479.40Sq.Ft.
Error Closure: 0.0000 Course: S81° 36' 37.42"E
Error North : 0.00000 East: 0.00003

Precision 1: 1,224,189,000.000

Parcel Name: Delta Drive Subdivision - Lot 10
Description:
Process segment order counterclockwise: False
Enable mapcheck across chord: False
North:9,913.6361' East:10,565.7788'

Segment# 1: Line
Course: S89° 33' 32.00"W Length: 52.021'
North: 9,913.2356' East: 10,513.7594'

Segment# 2: Line
Course: N0° 22' 53.00"W Length: 47.265'
North: 9,960.4996' East: 10,513.4448'

Segment# 3: Line
Course: N89° 37' 07.00"E Length: 72.000'
North: 9,960.9788' East: 10,585.4432'

Segment# 4: Line
Course: S0° 22' 53.00"E Length: 27.211'
North: 9,933.7684' East: 10,585.6243'

Segment# 5: Curve
Length: 31.395' Radius: 20.000'
Delta: 89.9403 (d) Tangent: 19.979'
Chord: 28.270' Course: S44° 35' 19.50"W
Course In: S89° 37' 07.00"W Course Out: S0° 26' 28.00"E
RP North: 9,933.6353' East: 10,565.6247'
End North: 9,913.6359' East: 10,565.7787'

Perimeter: 229.892' Area: 3,314.75Sq.Ft.
Error Closure: 0.0002 Course: S29° 57' 17.16"W
Error North : -0.00021 East: -0.00012

Precision 1: 1,149,460.000

Parcel Name: Delta Drive Subdivision - Lot 11
Description:
Process segment order counterclockwise: False
Enable mapcheck across chord: False
North:9,795.9792' East:10,396.9951'

Segment# 1: Line
Course: N33° 07' 22.00"W Length: 79.017'
North: 9,862.1561' East: 10,353.8175'

Segment# 2: Line
Course: N56° 52' 38.00"E Length: 84.970'
North: 9,908.5867' East: 10,424.9800'

Segment# 3: Line
Course: S33° 07' 22.00"E Length: 30.932'
North: 9,882.6811' East: 10,441.8823'

Segment# 4: Line
Course: S27° 22' 16.70"W Length: 97.632'
North: 9,795.9794' East: 10,396.9955'

Perimeter: 292.552' Area: 4,671.19Sq.Ft.

Error Closure: 0.0004 Course: N67° 05' 38.55"E
Error North : 0.00016 East: 0.00037

Precision 1: 731,377.500

Parcel Name: Delta Drive Subdivision - Lot 12
Description:
Process segment order counterclockwise: False
Enable mapcheck across chord: False
North:9,796.6615' East:10,485.6157'

Segment# 1: Line
Course: S89° 33' 32.00"W Length: 88.623'
North: 9,795.9792' East: 10,396.9954'

Segment# 2: Line
Course: N27° 22' 16.70"E Length: 97.632'
North: 9,882.6809' East: 10,441.8822'

Segment# 3: Line
Course: N89° 33' 32.00"E Length: 43.160'
North: 9,883.0132' East: 10,485.0409'

Segment# 4: Line
Course: S0° 22' 53.00"E Length: 86.354'
North: 9,796.6611' East: 10,485.6157'

Perimeter: 315.770' Area: 5,690.00Sq.Ft.
Error Closure: 0.0004 Course: S4° 29' 32.15"W
Error North : -0.00041 East: -0.00003

Precision 1: 789,422.500

Parcel Name: Delta Drive Subdivision - Lot 13
Description:
Process segment order counterclockwise: False
Enable mapcheck across chord: False
North:9,796.9959' East:10,529.0453'

Segment# 1: Line
Course: S89° 33' 32.00"W Length: 43.431'
North: 9,796.6615' East: 10,485.6155'

Segment# 2: Line
Course: N0° 22' 53.00"W Length: 86.354'
North: 9,883.0136' East: 10,485.0407'

Segment# 3: Line
Course: N89° 33' 32.00"E Length: 43.431'
North: 9,883.3480' East: 10,528.4704'

Segment# 4: Line
Course: S0° 22' 53.00"E Length: 86.354'
North: 9,796.9959' East: 10,529.0453'

Perimeter: 259.570' Area: 3,750.42Sq.Ft.
Error Closure: 0.0000 Course: N0° 00' 00.00"E
Error North : 0.00000 East: 0.00000

Precision 1: 259,570,000.000

Parcel Name: Delta Drive Subdivision - Lot 14
Description:
Process segment order counterclockwise: False
Enable mapcheck across chord: False
North:9,797.3305' East:10,572.5072'

Segment# 1: Line
Course: S89° 33' 32.00"W Length: 43.463'
North: 9,796.9959' East: 10,529.0455'

Segment# 2: Line
Course: N0° 22' 53.00"W Length: 86.354'
North: 9,883.3480' East: 10,528.4707'

Segment# 3: Line

Course: N89° 33' 32.00"E
Length: 43.463'
North: 9,883.6826'
East: 10,571.9324'

Segment# 4: Line
Course: S0° 22' 53.00"E
Length: 86.354'
North: 9,797.3305'
East: 10,572.5072'

Perimeter: 259.634'
Area: 3,753.22Sq.Ft.
Error Closure: 0.0000
Course: N0° 00' 00.00"E
Error North : 0.00000
East: 0.00000

Precision 1: 259,634,000.000

Parcel Name: Delta Drive Subdivision - Lot 15
Description:
Process segment order counterclockwise: False
Enable mapcheck across chord: False
North:9,797.5925'
East:10,606.5313'

Segment# 1: Line
Course: S89° 33' 32.00"W
Length: 34.025'
North: 9,797.3305'
East: 10,572.5073'

Segment# 2: Line
Course: N0° 22' 53.00"W
Length: 86.354'
North: 9,883.6826'
East: 10,571.9325'

Segment# 3: Line
Course: N89° 33' 32.00"E
Length: 34.025'
North: 9,883.9445'
East: 10,605.9565'

Segment# 4: Line
Course: S0° 22' 53.00"E
Length: 86.354'
North: 9,797.5925'
East: 10,606.5313'

Perimeter: 240.758'
Area: 2,938.20Sq.Ft.
Error Closure: 0.0000
Course: N0° 00' 00.00"E
Error North : 0.00000
East: 0.00000

Precision 1: 240,758,000.000

Parcel Name: Delta Drive Subdivision - Lot 2
Description:
Process segment order counterclockwise: False
Enable mapcheck across chord: False

North:10,108.0499' East:10,387.2190'

Segment# 1: Line
Course: N89° 37' 07.00"E Length: 43.000'
North: 10,108.3361' East: 10,430.2180'

Segment# 2: Line
Course: S0° 22' 53.00"E Length: 71.160'
North: 10,037.1777' East: 10,430.6917'

Segment# 3: Line
Course: S89° 37' 07.00"W Length: 43.000'
North: 10,036.8915' East: 10,387.6926'

Segment# 4: Line
Course: N0° 22' 53.00"W Length: 71.160'
North: 10,108.0499' East: 10,387.2190'

Perimeter: 228.320' Area: 3,059.88Sq.Ft.
Error Closure: 0.0000 Course: N0° 00' 00.00"E
Error North : 0.00000 East: 0.00000

Precision 1: 228,320,000.000

Parcel Name: Delta Drive Subdivision - Lot 3
Description:
Process segment order counterclockwise: False
Enable mapcheck across chord: False

North:10,037.4666' East:10,474.0756'

Segment# 1: Line

Course: S89° 37' 07.00"W
Length: 43.385'
North: 10,037.1778'
East: 10,430.6916'

Segment# 2: Line
Course: N0° 22' 53.00"W
Length: 71.160'
North: 10,108.3362'
East: 10,430.2179'

Segment# 3: Line
Course: N89° 37' 07.00"E
Length: 43.385'
North: 10,108.6250'
East: 10,473.6020'

Segment# 4: Line
Course: S0° 22' 53.00"E
Length: 71.160'
North: 10,037.4666'
East: 10,474.0756'

Perimeter: 229.090'
Area: 3,087.27Sq.Ft.
Error Closure: 0.0000
Course: N0° 00' 00.00"E
Error North : 0.00000
East: 0.00000

Precision 1: 229,090,000.000

Parcel Name: Delta Drive Subdivision - Lot 4
Description:
Process segment order counterclockwise: False
Enable mapcheck across chord: False
North:10,037.7543'
East:10,517.3055'

Segment# 1: Line
Course: S89° 37' 07.00"W
Length: 43.231'
North: 10,037.4666'
East: 10,474.0755'

Segment# 2: Line
Course: N0° 22' 53.00"W
Length: 71.160'
North: 10,108.6250'
East: 10,473.6018'

Segment# 3: Line
Course: N89° 37' 07.00"E
Length: 43.231'
North: 10,108.9128'
East: 10,516.8319'

Segment# 4: Line
Course: S0° 22' 53.00"E Length: 71.160'
North: 10,037.7543' East: 10,517.3055'

Perimeter: 228.782' Area: 3,076.31Sq.Ft.
Error Closure: 0.0000 Course: N0° 00' 00.00"E
Error North : 0.00000 East: 0.00000

Precision 1: 228,782,000.000

Parcel Name: Delta Drive Subdivision - Lot 5
Description:
Process segment order counterclockwise: False
Enable mapcheck across chord: False
North:10,038.0449' East:10,560.9569'

Segment# 1: Line
Course: S89° 37' 07.00"W Length: 43.652'
North: 10,037.7543' East: 10,517.3059'

Segment# 2: Line
Course: N0° 22' 53.00"W Length: 71.160'
North: 10,108.9128' East: 10,516.8322'

Segment# 3: Line
Course: N89° 37' 07.00"E Length: 43.652'
North: 10,109.2033' East: 10,560.4833'

Segment# 4: Line
Course: S0° 22' 53.00"E Length: 71.160'
North: 10,038.0449' East: 10,560.9569'

Perimeter: 229.625' Area: 3,106.30Sq.Ft.
Error Closure: 0.0000 Course: N0° 00' 00.00"E
Error North : 0.00000 East: 0.00000

Precision 1: 229,624,000.000

Parcel Name: Delta Drive Subdivision - Lot 6
Description:
Process segment order counterclockwise: False
Enable mapcheck across chord: False

North:10,038.3376' East:10,604.9288'

Segment# 1: Line
Course: S89° 37' 07.00"W Length: 43.973'
North: 10,038.0449' East: 10,560.9568'

Segment# 2: Line
Course: N0° 22' 53.00"W Length: 71.160'
North: 10,109.2033' East: 10,560.4831'

Segment# 3: Line
Course: N89° 37' 07.00"E Length: 43.973'
North: 10,109.4960' East: 10,604.4551'

Segment# 4: Line
Course: S0° 22' 53.00"E Length: 71.160'
North: 10,038.3376' East: 10,604.9288'

Perimeter: 230.265' Area: 3,129.10Sq.Ft.
Error Closure: 0.0000 Course: N0° 00' 00.00"E
Error North : 0.00000 East: 0.00000

Precision 1: 230,266,000.000

Parcel Name: Delta Drive Subdivision - Lot 7
Description:
Process segment order counterclockwise: False
Enable mapcheck across chord: False

North:9,959.9262' East:10,427.3039'

Segment# 1: Line
Course: N33° 07' 22.00"W Length: 19.510'
North: 9,976.2659' East: 10,416.6430'

Segment# 2: Curve
Length: 42.845' Radius: 20.000'
Delta: 122.7414 (d) Tangent: 36.638'
Chord: 35.110' Course: N28° 14' 52.50"E
Course In: N56° 52' 38.00"E Course Out: N0° 22' 53.00"W
RP North: 9,987.1946' East: 10,433.3930'
End North: 10,007.1941' East: 10,433.2599'

Segment# 3: Line
Course: N89° 37' 07.00"E Length: 79.872'
North: 10,007.7258' East: 10,513.1301'

Segment# 4: Line
Course: S0° 22' 53.00"E Length: 47.227'
North: 9,960.4998' East: 10,513.4445'

Segment# 5: Line
Course: S89° 37' 07.00"W Length: 86.143'
North: 9,959.9264' East: 10,427.3034'

Perimeter: 275.598' Area: 4,481.08Sq.Ft.
Error Closure: 0.0006 Course: N68° 20' 16.23"W
Error North : 0.00021 East: -0.00054

Precision 1: 459,328.333

Parcel Name: Delta Drive Subdivision - Lot 8
Description:
Process segment order counterclockwise: False
Enable mapcheck across chord: False
North:10,007.7259' East:10,513.1305'

Segment# 1: Line
Course: N89° 37' 07.00"E Length: 52.000'
North: 10,008.0720' East: 10,565.1294'

Segment# 2: Curve

Length: 31.416' Radius: 20.000'
Delta: 90.0000 (d) Tangent: 20.000'
Chord: 28.284' Course: S45° 22' 53.00"E
Course In: S0° 22' 53.00"E Course Out: N89° 37' 07.00"E
RP North: 9,988.0725' East: 10,565.2625'
End North: 9,988.2056' East: 10,585.2621'

Segment# 3: Line
Course: S0° 22' 53.00"E Length: 27.227'
North: 9,960.9792' East: 10,585.4433'

Segment# 4: Line
Course: S89° 37' 07.00"W Length: 72.000'
North: 9,960.4999' East: 10,513.4449'

Segment# 5: Line
Course: N0° 22' 53.00"W Length: 47.227'
North: 10,007.7259' East: 10,513.1305'

Perimeter: 229.871' Area: 3,314.53Sq.Ft.
Error Closure: 0.0000 Course: S45° 00' 00.00"E
Error North : 0.00000 East: 0.00000

Precision 1: 229,870,000.000

Parcel Name: Delta Drive Subdivision - Lot 9
Description:
Process segment order counterclockwise: False
Enable mapcheck across chord: False
North:9,960.4996' East:10,513.4449'

Segment# 1: Line
Course: S0° 22' 53.00"E Length: 47.265'
North: 9,913.2357' East: 10,513.7595'

Segment# 2: Line
Course: S89° 33' 32.00"W Length: 44.783'
North: 9,912.8909' East: 10,468.9778'

Segment# 3: Curve

Length: 20.008'	Radius: 20.000'
Delta: 57.3183 (d)	Tangent: 10.931'
Chord: 19.184'	Course: N61° 46' 55.00"W
Course In: N0° 26' 28.00"W	Course Out: S56° 52' 38.00"W
RP North: 9,932.8903'	East: 10,468.8239'
End North: 9,921.9616'	East: 10,452.0738'

Segment# 4: Line

Course: N33° 07' 22.00"W	Length: 45.331'
North: 9,959.9264'	East: 10,427.3034'

Segment# 5: Line

Course: N89° 37' 07.00"E	Length: 86.143'
North: 9,960.4998'	East: 10,513.4445'

Perimeter: 243.529'	Area: 3,336.39Sq.Ft.
Error Closure: 0.0004	Course: N67° 37' 18.74"W
Error North : 0.00017	East: -0.00041

Precision 1: 608,825.000

DELTA DRIVE SUBDIVISION CONSTRUCTION IMPROVEMENT PLAN

JUNEAU, ALASKA

SHEET INDEX

SHEET No.	DESCRIPTION
C001	COVER SHEET
C002	GENERAL NOTES, ABBREVIATIONS AND SYMBOLS
C003	SUMMARY TABLES
C004	EXISTING SITE CONDITIONS
C100	TYPICAL SECTIONS
C101	CONSTRUCTION DETAILS
C102	CONSTRUCTION DETAILS
C200	OVERALL SITE PLAN
C201	SITE & UTILITY PLAN
C202	SITE & UTILITY PLAN
C203	GRADING PLAN
C204	WATER METER ENCLOSURE DETAILS
C205	WATER METER ENCLOSURE DETAILS
C206	WATER METER ENCLOSURE DETAILS
C207	WATER METER ENCLOSURE DETAILS
C300	EROSION & SEDIMENT CONTROL PLAN
C301	EROSION & SEDIMENT CONTROL DETAILS

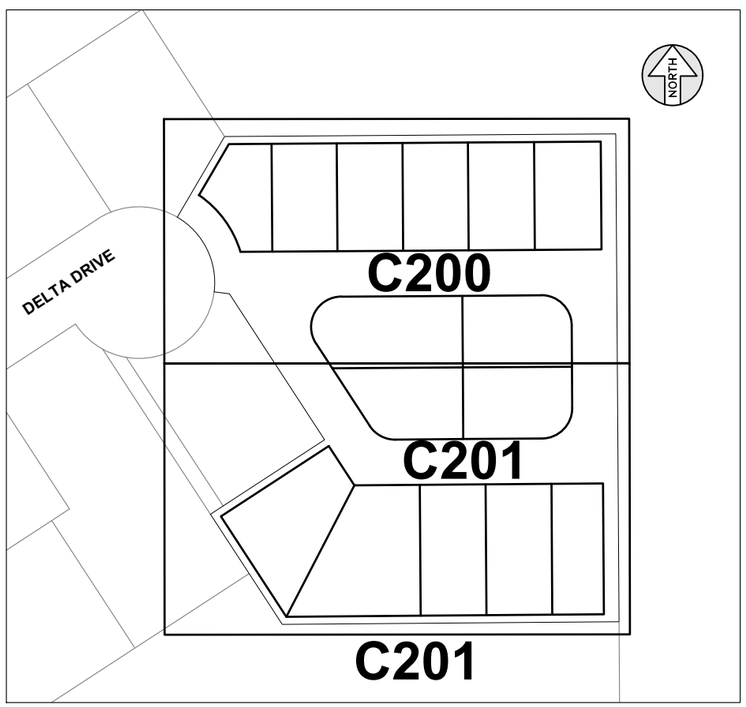

SHEET KEY MAP

N.T.S.

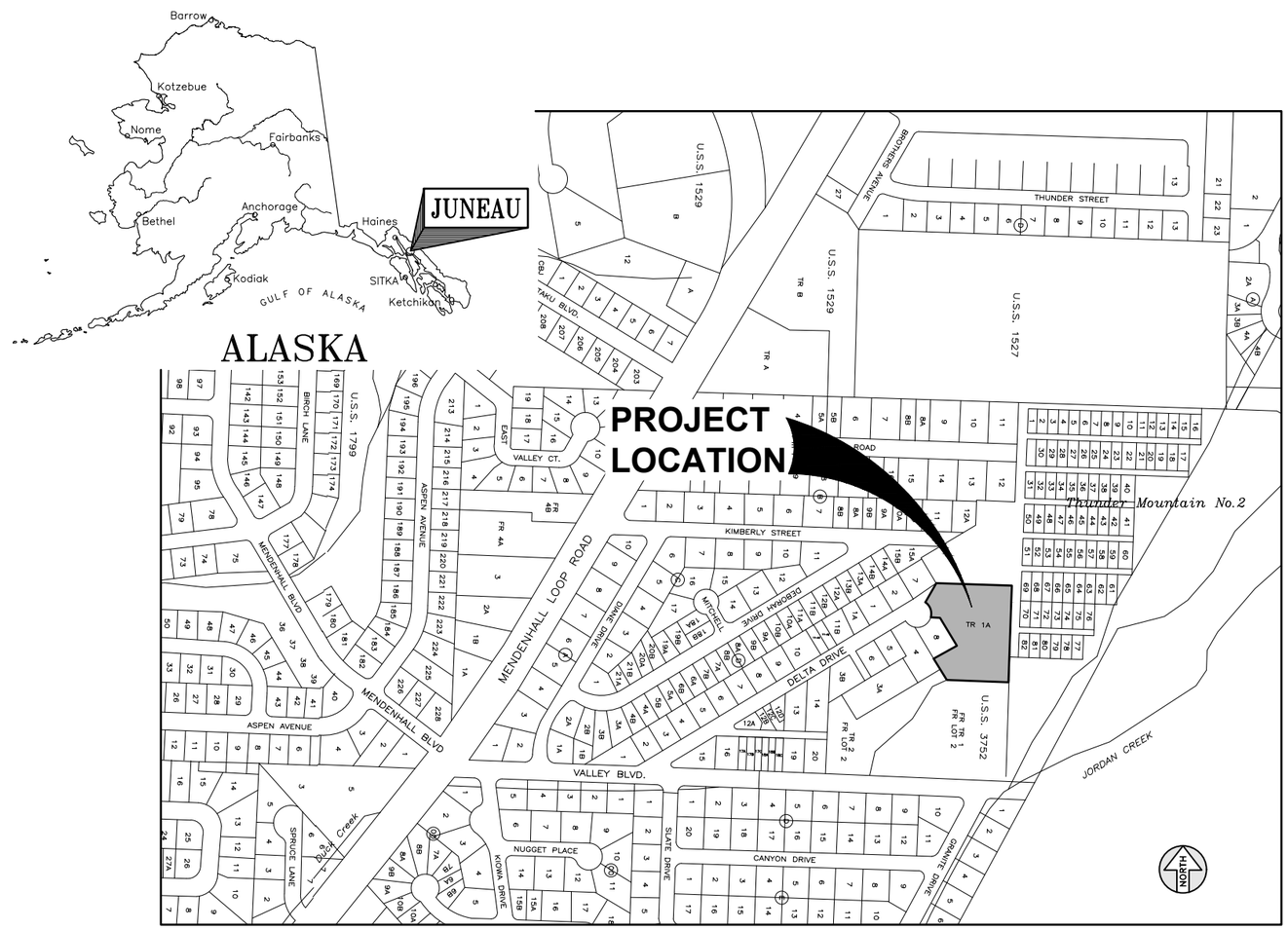

PROJECT LOCATION MAP

500' 0 250' 500' 1000'

SCALE: 1"=500'

DESIGN	MSM
DRAWN	MSM
CHECK	JMP
APPROVED	JMP
FILE:	

No.	DATE	REVISION	BY	APRVD.

DELTA DRIVE SUBDIVISION

JUNEAU, AK

BICKNELL INC. QUALITY CONSTRUCTION

STATE OF ALASKA 49TH Joseph M. Pusich CE 8152 REGISTERED PROFESSIONAL ENGINEER 12/03/20

PDC ENGINEERS
PLAN • DESIGN • CONSTRUCT
A BESPEC COMPANY
907.780.6060 | AECC605

COVER SHEET

DATE: Dec 03, 2020
PDC No. 20098JN

SHEET C001

P:\2020\20098JN-Bicknell_Delta\C\C0001cnst20098JN.dwg PLOT: December 03, 2020 at: 3:58pm Micki.Minsch

GENERAL CONSTRUCTION NOTES

1. CBJ ENGINEERING STANDARD DETAILS BOOK FOR CIVIL ENGINEERING PROJECTS AND SUBDIVISION IMPROVEMENTS DATED AUGUST, 2011 AND CBJ ENGINEERING STANDARD SPECIFICATIONS DATED DECEMBER, 2003 ARE MADE A PART OF THIS CONTRACT, WITH CURRENT REVISIONS AS APPLICABLE.
2. LARGE BOULDERS, HARDPAN, STUMPS, LOGS, ORGANICS AND GROUND WATER MAY BE ENCOUNTERED AT VARIOUS DEPTHS DURING EXCAVATION OPERATIONS. THESE MATERIALS SHALL BE DISPOSED OF AS REQUIRED BY THE ENGINEER.
3. GRADES AND ALIGNMENTS SHOWN ON THESE PLANS ARE SUBJECT TO MINOR REVISIONS AS APPROVED BY THE ENGINEER.
4. LOCATION OF WATER SYSTEM IMPROVEMENTS, SANITARY SEWER MANHOLES, STORM DRAIN STRUCTURES, PIPING AND PIPE LENGTHS ARE SUBJECT TO MINOR REVISIONS AS APPROVED BY THE ENGINEER.
5. LOCATIONS OF EXISTING UNDERGROUND SEWER, WATER, TELEPHONE, CABLE TELEVISION, AND POWER UTILITIES SHOWN ON THESE PLANS WERE DERIVED FROM CBJ AS-BUILTS OR FIELD LOCATES. ACTUAL LOCATIONS MAY VARY FROM THOSE SHOWN. THE CONTRACTOR IS RESPONSIBLE FOR LOCATING, PROTECTING AND MAINTAINING THE UTILITIES THROUGHOUT THE CONSTRUCTION OF THIS PROJECT. ANY DAMAGE RESULTING TO THESE UNDERGROUND UTILITIES DURING CONSTRUCTION SHALL BE PAID FOR BY THE CONTRACTOR AND SHALL BE CONSIDERED INCIDENTAL TO THE CONTRACT. CALL "DIAL BEFORE YOU DIG" @ 586-1333 FOR UNDERGROUND UTILITY LOCATES AND 811 ALASKA DIG LINE FOR ACS AND GCI PRIOR TO ANY EXCAVATION ACTIVITIES.
6. CONTRACTOR SHALL ASSURE GARBAGE PICKUP, DAILY MAIL SERVICE, FUEL AND SERVICE DELIVERIES WILL BE UNINTERRUPTED TO ALL RESIDENTS AFFECTED BY THIS PROJECT.
7. PROPERTY LINE LOCATIONS USED IN THESE PLANS WERE DERIVED FROM RECORD PLATS AND DO NOT REPRESENT A SUBDIVISION BOUNDARY SURVEY.
8. ALL SIGN INSTALLATIONS OR RELOCATIONS SHALL BE PERFORMED ACCORDING TO THE "MANUAL ON UNIFORM TRAFFIC CONTROL DEVICES" (M.U.T.C.D.) WITH THE ALASKA SUPPLEMENT.
9. ALL ITEMS DESIGNATED TO BE REMOVED SHALL BE DISPOSED OF AT AN APPROVED DISPOSAL SITE, EXCEPT AS NOTED IN THE CONTRACT DOCUMENTS.
10. PROVIDE KNOCKOUTS IN PRECAST STORM DRAIN STRUCTURES FOR ALL PIPES SHOWN ON THE PLANS.
10. ONLY HORIZONTAL ELBOW FITTINGS (BENDS) ARE SHOWN ON THE PLANS. ADDITIONAL FITTINGS WILL BE REQUIRED FOR VERTICAL DEFLECTIONS NEAR CONNECTION TO EXISTING PIPES, AND AT OTHER LOCATIONS REQUIRING GRADE CHANGES TO AVOID CONFLICTS.
11. THE CONTRACTOR SHALL NOT STORE MATERIALS OR EQUIPMENT OR OPERATE EQUIPMENT WITH ITS TRACKS OR WHEELS PLACED ON PRIVATE PROPERTY WITHOUT THE WRITTEN APPROVAL OF THE PROPERTY OWNER.
11. THE CONTRACTOR SHALL NOTIFY CBJ WATER UTILITIES OPERATOR LONI VANKIRK (723-4975) OF PROPOSED WATER SERVICE INTERRUPTION AND SUBMIT THE "WATER SYSTEM SPECIAL USE PERMIT" (COSIGNED BY THE ENGINEER) AT LEAST 48-HOURS PRIOR TO SHUTDOWN OR FLUSHING OF MAINLINE WATER PIPE. NO WATER SERVICE INTERRUPTION MAY PROCEED UNTIL THIS APPROVAL IS OBTAINED.
12. CONTRACTOR SHALL REFERENCE ALL EXISTING PROPERTY CORNER MONUMENTS (I.E. BRASS CAP MONUMENTS, REBARS OR CHISELED X'S) PRIOR TO CONSTRUCTION THAT WILL BE DISTURBED DURING HIS WORK, AND REMONUMENT AFTER CONSTRUCTION OPERATIONS. ALL WORK SHALL BE DONE BY, OR UNDER THE DIRECTION OF, AN ALASKA REGISTERED LAND SURVEYOR. ALL EXISTING PROPERTY CORNERS ARE NOT NECESSARILY SHOWN ON THE PLANS.
13. THE PLAN DRAWINGS DO NOT NECESSARILY SHOW ALL TREES AND SHRUBS THAT MAY BE ENCOUNTERED DURING CONSTRUCTION ACTIVITIES. NO TREES, SHRUBS OR LANDSCAPING ARE TO BE REMOVED OR DAMAGED, UNLESS SHOWN ON THE DRAWINGS OR DIRECTED BY THE ENGINEER.
14. "JUMPING JACK", OR SIMILAR TYPE COMPACTORS SHALL BE USED FOR COMPACTION WITHIN 18-INCHES OF THE OUTSIDE SURFACE OF ALL WATER VALVE BOXES, CATCH BASINS AND MANHOLES.
15. THE USE OF GROUT AND QUICKSET CEMENT PRODUCTS WITH ADJUSTING RINGS, BRICKS, WOOD, STONES AND OTHER SIMILAR GRADE ADJUSTMENT DEVICES TO SUPPORT CATCH BASIN FRAMES OVER CATCH BASINS AND MANHOLES WILL NOT BE PERMITTED ON THIS PROJECT. SEE CBJ STANDARD SPECIFICATIONS, SECTION 02502 - STORM SEWER MANHOLES, INLETS AND CATCH BASINS AND THE DRAWINGS FOR CATCH BASIN FRAME SUPPORT REQUIREMENTS. SANITARY SEWER MANHOLES SHALL BE ADJUSTED PER CBJ STANDARD SPECIFICATIONS 02402 - SANITARY SEWER MANHOLES AND CLEANOUTS.
16. THE CONTRACTOR SHALL INSTALL AND MAINTAIN ENGINEER APPROVED EROSION CONTROL DEVICES DURING CONSTRUCTION PER CBJ STANDARD SPECIFICATIONS SECTION 01570 REQUIREMENTS.
17. ALL WORK FOR THESE PLANS SHALL BE CONDUCTED IN STRICT ACCORDANCE WITH APPLICABLE LOCAL, STATE AND FEDERAL LAWS AND STANDARDS.

ABBREVIATIONS

AC	ASBESTOS CEMENT
ACS	ALASKA COMMUNICATIONS SYSTEMS
AEL&P	ALASKA ELECTRIC LIGHT & POWER
APPROX	APPROXIMATE
AST	ABOVEGROUND STORAGE TANK
BC	BACK OF CURB
BLVD	BOULEVARD
BOP	BEGINNING OF PROJECT
CB	CATCH BASIN
CBJ	CITY & BOROUGH OF JUNEAU
CHB	CHORD BEARING
CHL	CHORD LENGTH
C/L	CENTERLINE
CI	CAST IRON
CLR	CLEAR
CMP	CORRUGATED METAL PIPE
CONC	CONCRETE
CONT	CONTINUOUS
CPP	CORRUGATED POLYETHYLENE PIPE
CTE	CONNECT TO EXISTING
DI	DUCTILE IRON
DIP	DUCTILE IRON PIPE
DIA	DIAMETER
E	EASTING
EG	EXISTING GRADE
EL	ELEVATION
EOP	END OF PROJECT
EP	EDGE OF PAVEMENT
EXIST	EXISTING
EXP	EXPANSION
FG	FINISH GRADE
FH	FIRE HYDRANT
FL	FLOW LINE
GCI	GENERAL COMMUNICATION INC.
GV	GATE VALVE
HDPE	HIGH DENSITY POLYETHYLENE
HP	HIGH PRESSURE
IE	INVERT ELEVATION
L	LENGTH
LP	LOW POINT
LT	LEFT
MAX	MAXIMUM
MIN	MINIMUM
MJ	MECHANICAL JOINT
MTE	MATCH TO EXISTING
N	NORTHING
N/A	NOT APPLICABLE
NFS	NON-FROST SUSCEPTIBLE
NTS	NOT TO SCALE
NVC	NO VERTICAL CURVE
OC	ON CENTER
PC	POINT OF CURVATURE
PERF	PERFORATED
PI	POINT OF INTERSECTION
P/L	PROPERTY LINE
POC	POINT ON CURVE
POL	POINT ON LINE
PP	POWER POLE
PT	POINT OF TANGENCY
PVC	POLYVINYL CHLORIDE
R	RADIUS
ROW	RIGHT-OF-WAY
RP	RADIUS POINT
RT	RIGHT
SDMH	STORM DRAIN MANHOLE
SS	SANITARY SEWER
SSCO	SANITARY SEWER CLEANOUT
SSMH	SANITARY SEWER MANHOLE
STA	STATION
STD	STANDARD
SWPPP	STORM WATER POLLUTION PREVENTION PLAN
T	TANGENT
TBG	TOP BACK OF GUTTER
TBM	TEMPORARY BENCH MARK
TC	TOP OF CONCRETE
TOB	TOP OF BANK
TOP	TOP OF PIPE
TYP	TYPICAL
UD	UNDERDRAIN
UON	UNLESS OTHERWISE NOTED
UST	UNDERGROUND STORAGE TANK
VC	VERTICAL CURVE
VERT	VERTICAL
VPI	VERTICAL POINT OF INTERSECTION
W/	WITH

SYMBOLS

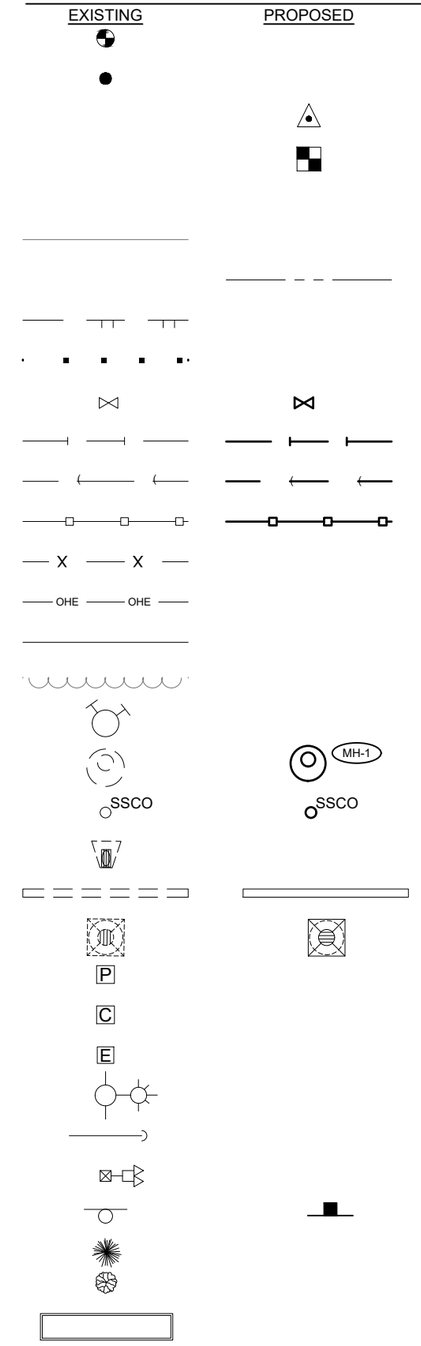

PRIMARY MONUMENT
SECONDARY MONUMENT
SURVEY SPIKE / MAG NAIL
TEMPORARY BENCHMARK
PROPERTY / BOUNDARY LINE
PROPERTY / BOUNDARY LINE UNSURVEYED
PROJECT BASELINE
TOP OF BANK
TOE OF SLOPE
WATER GATE VALVE/CURB STOP
WATER LINE/SERVICE
SEWER LINE/SERVICE
WOODEN FENCE
CHAIN-LINK FENCE
OVERHEAD ELECTRIC LINE
ASPHALT PAVEMENT
TREE LINE
FIRE HYDRANT
SANITARY SEWER MANHOLE
SANITARY SEWER CLEANOUT
CONCRETE HEADWALL W/ TRASH RACK
STORM SEWER PIPE
CATCH BASIN W/ AREA DRAIN
TELEPHONE PEDESTAL
CABLE PEDESTAL
ELECTRICAL PEDESTAL
POWER POLE WITH LIGHT
GUY WIRE
GANG STYLE MAILBOX
STREET SIGN
CONIFEROUS TREE
DECIDUOUS TREE
BUILDING FOUNDATION

P:\2020\20098JN-Bicknell_Delta\CIC\0001cmd\20098JN.dwg PLOT: December 03, 2020 at: 3:58pm Mick.Minsch

DESIGN MSM
DRAWN MSM
CHECK JMP
APPROVED JMP
FILE:

No.	DATE	REVISION	BY	APRVD.

DELTA DRIVE SUBDIVISION
JUNEAU, AK

BICKNELL INC. QUALITY CONSTRUCTION

STATE OF ALASKA 49TH Joseph M. Pusich CE 8152 REGISTERED PROFESSIONAL ENGINEER 12/03/20

PDC ENGINEERS
PLAN • DESIGN • CONSTRUCT
A BESPEC COMPANY
9360 Glacier Highway, Suite 204, Juneau, AK 99801
907.780.6660 | AECC005

GENERAL NOTES, ABBREVIATIONS AND SYMBOLS

DATE: Dec 03, 2020
PDC No. 20098JN
SHEET
C002

Attachment A - SMP2020.0004 Preliminary Plat Notice of Decision and Staff Report

WATER SERVICE SUMMARY

LOT No.	STATION & OFFSET	SIZE/TYPE	REMARKS
2	10+95.1, 13.5' LT	1" POLY	SEE NOTE 1
3	11+28.9, 13.5' LT	1" POLY	SEE NOTE 1
4	11+81.8, 13.5' LT	1" POLY	SEE NOTE 1
5	12+15.3, 13.5' LT	1" POLY	SEE NOTE 1
6	12+58.8, 21.4' LT	1" POLY	SEE NOTE 1
7	11+68.0, 13.4' RT	1" POLY	NEW SERVICE
8	12+28.0, 13.5' RT	1" POLY	NEW SERVICE
9	14+71.4, 13.4' RT	1" POLY	NEW SERVICE
10	14+11.4, 13.3' RT	1" POLY	NEW SERVICE
11	15+22.0, 18.1' LT	1" POLY	SEE NOTE 1
12	14+96.0, 13.5' LT	1" POLY	SEE NOTE 1
13	14+62.5, 13.5' LT	1" POLY	SEE NOTE 1
14	14+09.2, 13.5' LT	1" POLY	SEE NOTE 1
15	13+85.5, 21.6' LT	1" POLY	SEE NOTE 1

NOTES:

1. EXISTING FOUNDATION PADS REPORTED TO HAVE 3/4" POLY WATER SERVICES TO EACH UNIT. EXISTING WATER SERVICES MAY BE REUSED IF FOUND TO BE IN SATISFACTORY CONDITION. FLUSHING, DISINFECTION AND PRESSURE TESTING SHALL BE PERFORMED ON THE EXISTING 3/4" POLY WATER SERVICES.

SEWER SERVICE SUMMARY

LOT No.	STATION & OFFSET	SIZE/TYPE	REMARKS
2	10+82.7, 14.0' LT	4" PVC	SEE NOTE 1
3	11+16.6, 14.0' LT	4" PVC	SEE NOTE 1
4	11+71.4, 14.0' LT	4" PVC	SEE NOTE 1
5	12+02.3, 14.0' LT	4" PVC	SEE NOTE 1
6	12+52.1, 14.0' LT	4" PVC	SEE NOTE 1
7	11+38.0, 14.5' RT	4" PVC	NEW SERVICE
8	11+98.0, 14.5' RT	4" PVC	NEW SERVICE
9	15+01.5, 14.5' RT	4" PVC	NEW SERVICE
10	14+41.4, 14.5' RT	4" PVC	NEW SERVICE
11	15+27.7, 14.0' LT	4" PVC	SEE NOTE 1
12	15+07.9, 14.0' LT	4" PVC	SEE NOTE 1
13	14+77.6, 14.0' LT	4" PVC	SEE NOTE 1
14	14+22.8, 14.0' LT	4" PVC	SEE NOTE 1
15	13+92.1, 14.0' LT	4" PVC	SEE NOTE 1

NOTES:

1. SEWER SERVICE LOCATIONS SHOWN ARE FROM LIMITED AS-BUILT INFORMATION AND WERE NOT FIELD LOCATED. EXISITNG 4" PVC SEWER SERVICES EXIST FOR LOTS 2-6 AND LOTS 11-15. CONTRACTOR SHALL FIELD LOCATE ALL SEWER SERVICES TO CONFIRM FINAL LOCATION FOR NEW SEWER SERVICE CLEANOUT INSTALLATION. STATION & OFFSET ARE GIVEN TO THE CENTER OF THE NEW CLEANOUT LID. IF EXISTING SANITARY SEWER SERVICES FOUND TO BE IN GOOD CONDITION CONTRACTOR MAY KEEP THEM IN SERVICE.
2. CONSTRUCT NEW 4" PVC SEWER SERVICE AND INSTALL NEW CLEANOUT NEAR PROPERTY LINE PER CBJ STANDARD DETAIL 213 AND CONNECT TO EXISTING SEWER SERVICE.
3. ADJUST SEWER SERVICE SLOPE TO PROVIDE MAXIMUM SEPARATION BETWEEN UTILITY CROSSINGS. INSTALL SWEEPS AS REQUIRED UPON APPROVAL OF THE ENGINEER.

STORM DRAIN STRUCTURE FRAME & GRATE SUMMARY

STRUCTURE No.	EAST JORDAN, OLYMPIC FOUNDRY Co., CBJ STANDARD No., OR APPROVED EQUAL
S-1	OLYMPIC FOUNDARY MH34SC

P:\2020\20098JN-Bicknell_Delta\CC0002cns\20098JN.dwg PLOT: December 03, 2020 at: 3:58pm Micki.Mirisch

DESIGN MSM
DRAWN MSM
CHECK JMP
APPROVED JMP
FILE:

No.	DATE	REVISION	BY	APRVD.

DELTA DRIVE SUBDIVISION

BICKNELL INC. QUALITY CONSTRUCTION

STATE OF ALASKA 49TH Joseph M. Pusich CE 8152 REGISTERED PROFESSIONAL ENGINEER 12/03/20

PDC ENGINEERS
PLAN • DESIGN • CONSTRUCT
A BESPEC COMPANY
907.780.6060 | AECC605

SUMMARY TABLES

DATE: Dec 03, 2020
PDC No. 20098JN

SHEET
C003

SURVEY NOTES

1. THE PURPOSE OF THIS SURVEY IS TO PROVIDE A TOPOGRAPHIC DESIGN SURVEY OF THE DELTA DRIVE DEVELOPMENT.
2. THE FIELD SURVEYS WERE PERFORMED ON MAY 26-27, 2020.
3. THE SURVEY EQUIPMENT UTILIZED DURING THIS SURVEY WAS TRIMBLE R8-2 GNSS ROVER AND BASE AND A TRIMBLE S-7 ROBOTIC TOTAL STATION UTILIZING STANDARD LASER MEASURING TECHNIQUES.
4. ALL DISTANCES AND DIMENSIONS ARE IN U.S. SURVEY FEET AND REDUCED TO THEIR HORIZONTAL VALUES.
5. CONTROL AND MONUMENT COORDINATES ARE IN AN ASSUMED LOCAL COORDINATE SYSTEM.
6. ELEVATIONS ARE IN AN ASSUMED LOCAL VERTICAL DATUM.
7. CONTOURS ARE SHOWN AT 1-FOOT INTERVALS.
8. ALL UTILITIES WERE LOCATED BY PDC AND ARE BASED ON OBSERVABLE EVIDENCE AND ABOVE GROUND APPURTENANCES AND FIELD RETRACEMENT PERFORMED BY PDC.
9. THIS SURVEY DOES NOT CONSTITUTE A SUBDIVISION AS PER ALASKA STATUTE 40.15.900(5)(a).

EXIST. SSCO	(CO1)
STA 10+04.9,	33.3 LT
EXIST. LID EL=	97.31
SW 8" (OUT) IE=	94.81

EXIST. SSMH	(M1)
STA 08+90.8,	25.9 RT
EXIST. LID EL=	98.50
E 6" (IN) IE=	92.94
NW 8" (OUT) IE=	92.84

NOTES:
1. ROADWAY AND UTILITY INFORMATION SHOWN ON DELTA DRIVE IS PROPOSED FROM CBJ CONTRACT BE21-028 "DELTA DRIVE RECONSTRUCTION." WORK IS SCHEDULED FOR SPRING/SUMMER 2021.
2. EXISTING 6" PVC SEWER MAIN AND 2" POLY PIPE FOR DOMESTIC WATER EXIST ON SITE.

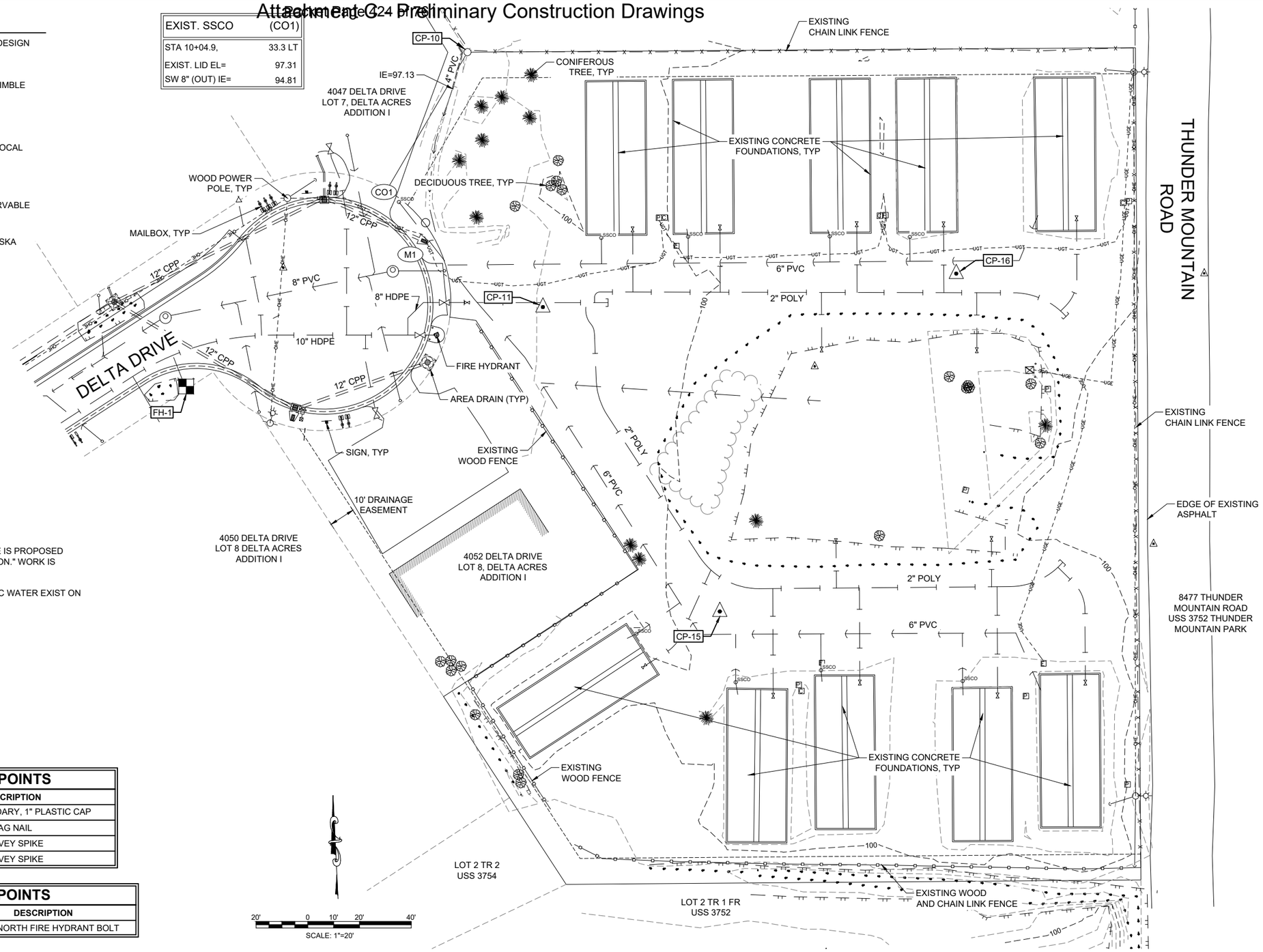

TABLE OF HORIZONTAL CONTROL POINTS

POINT #	NORTHING	EASTING	DESCRIPTION
CP 10	10112.63	10356.34	S-3650, SECONDARY, 1" PLASTIC CAP
CP 11	10014.23	10385.34	MAG NAIL
CP 15	9896.49	10453.74	SURVEY SPIKE
CP 16	10027.18	10545.16	SURVEY SPIKE

TABLE OF VERTICAL CONTROL POINTS

POINT #	NORTHING	EASTING	ELEVATION	DESCRIPTION
FH-1	9983.52	10247.42	100.44'	"X" ON NORTH FIRE HYDRANT BOLT

P:\2020\20098JN-Bicknell_Delta\CIC\2001cns\20098JN.dwg, PLOT: December 03, 2020 at: 3:58pm Micki Minsch

DESIGN MSM
DRAWN MSM
CHECK JMP
APPROVED JMP
FILE:

No.	DATE	REVISION	BY	APRVD.

DELTA DRIVE SUBDIVISION
JUNEAU, AK

BICKNELL INC. QUALITY CONSTRUCTION

STATE OF ALASKA 49TH Joseph M. Pusich CE 8152 REGISTERED PROFESSIONAL ENGINEER 12/03/20

PDC ENGINEERS
PLAN • DESIGN • CONSTRUCT
A BESPEC COMPANY
7000 Vanguard Drive, Juneau, AK 99801
907.780.6060 | AECC605

EXISTING SITE CONDITIONS

DATE: Dec 03, 2020
PDC No. 20098JN
SHEET
C004

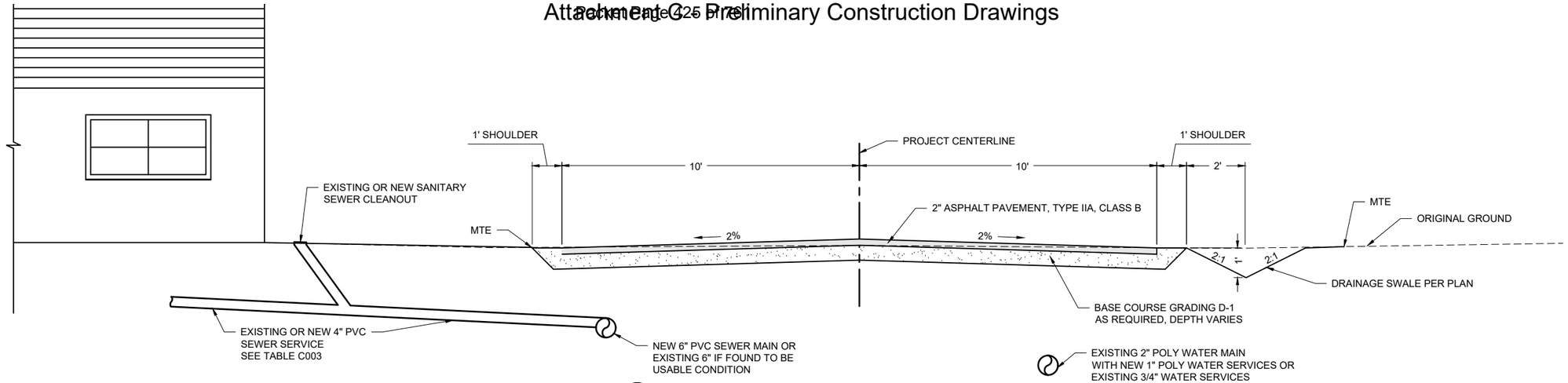

1 / 100 ROADWAY TYPICAL SECTION

SCALE: NTS

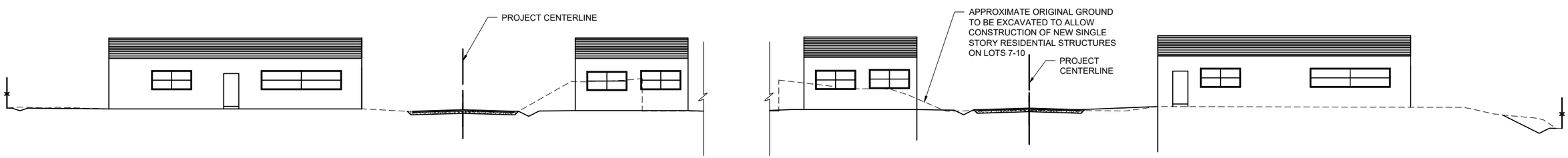

2 / C100 SITE TYPICAL SECTION

SCALE: NTS

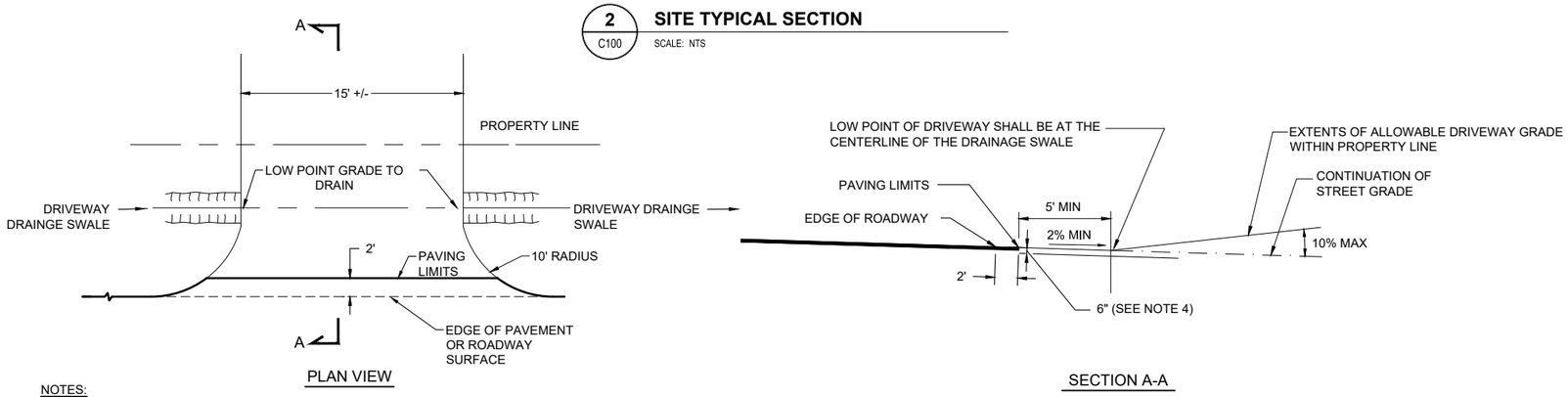

NOTES:

1. PAVING LIMIT FOR DRIVEWAYS SHALL BE 2' FROM THE EDGE OF ROADWAY OR AS APPROVED BY THE ENGINEER.
2. DRIVEWAY SWALE SHALL BE GRADED TO DRAIN INTO DRAINAGE SWALE

3 / C100 TYPICAL DRIVEWAY SWALE DETAIL

SCALE: NTS

SHEET C100 NOTES:

1. EXISTING 2" POLY WATER LINE WILL BE FLUSHED, DISINFECTED AND PRESSURE TESTED IN ACCORDANCE WITH CBJ STANDARD SPECIFICATIONS TO ENSURE COMPLIANCE WITH PUBLIC DRINKING WATER REGULATIONS.

P:\2020\20098JN-Bicknell_Delta\CIC3001\ms\20098JN.dwg PLOT: December 03, 2020 at: 3:59pm Micki Minsch

DESIGN	MSM
DRAWN	MSM
CHECK	JMP
APPROVED	JMP
FILE:	

No.	DATE	REVISION	BY	APRVD.

DELTA DRIVE SUBDIVISION

DELTA JUNEAU, AK

BICKNELL INC. QUALITY CONSTRUCTION

STATE OF ALASKA 749TH Joseph M. Pusich CE 8152 REGISTERED PROFESSIONAL ENGINEER 12/03/20

PDC ENGINEERS
PLAN • DESIGN • CONSTRUCT
A RESPEC COMPANY
907.780.6060 | AECC605
7000 Vanguard Drive, Suite 201, Juneau, AK 99801

TYPICAL SECTIONS

DATE: Dec 03, 2020
PDC No. 20098JN

SHEET C100

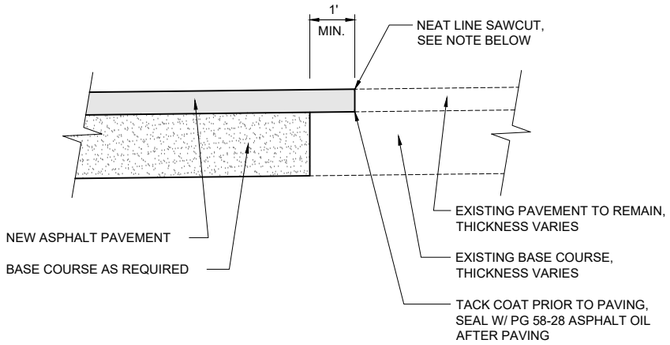

NOTE:
SAWCUT OF EXISTING PAVEMENT SHALL NOT BE MADE UNTIL 24 HOURS PRIOR TO FINAL PAVING.

1 / C101 PAVEMENT MATCH DETAIL
SCALE: NTS

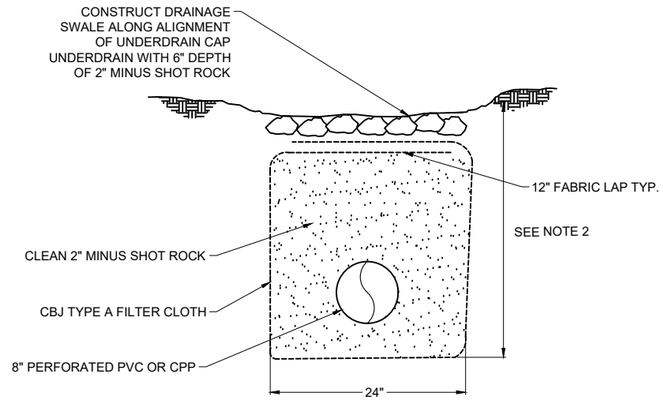

NOTES:
1. OUTFALL CONNECTIONS TO DAYLIGHT NEAR CULVERT INLETS PER PLAN.
2. DEPTH OF UNDERDRAIN VARIES, MIN SLOPE=0.50%

2 / C101 8" UNDERDRAIN DETAIL
SCALE: NTS

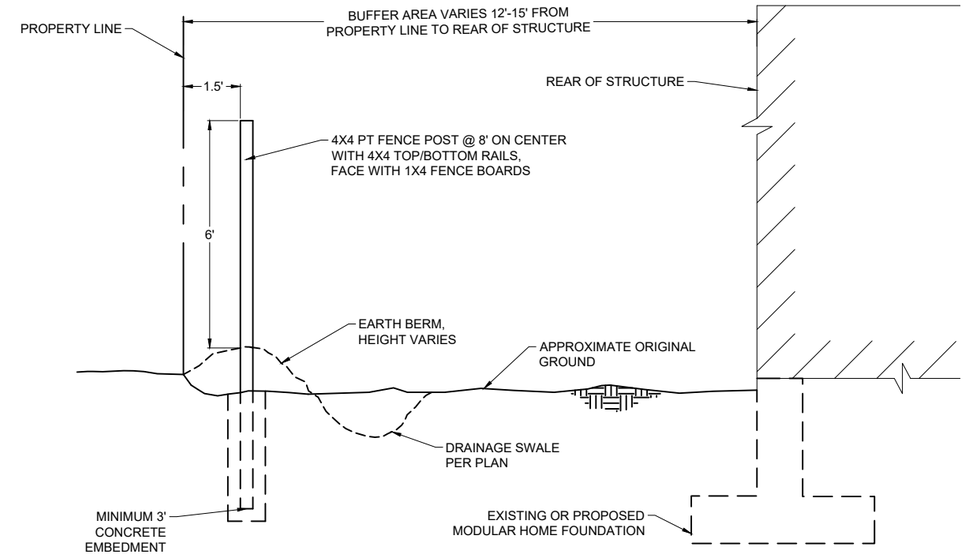

3 / C101 TYPICAL FENCE AT REAR OF DWELLING
SCALE: 1"=2'

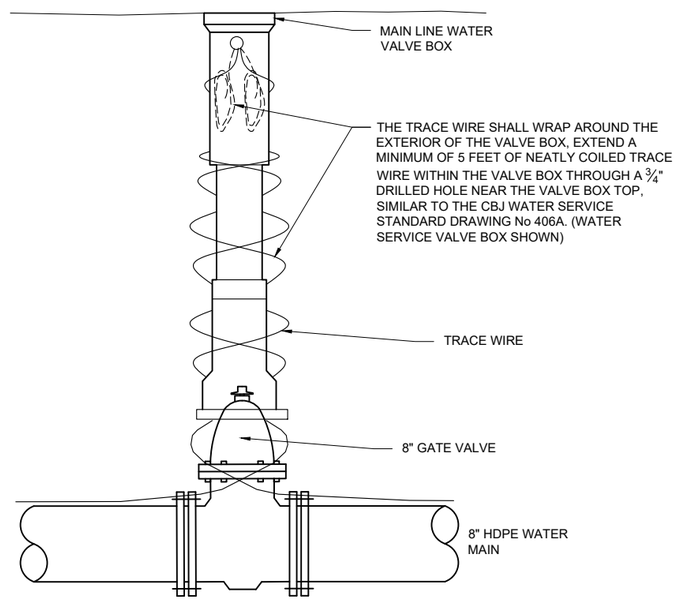

4 / C101 MAIN LINE VALVE TRACE WIRE TERMINATION DETAIL
SCALE: NTS

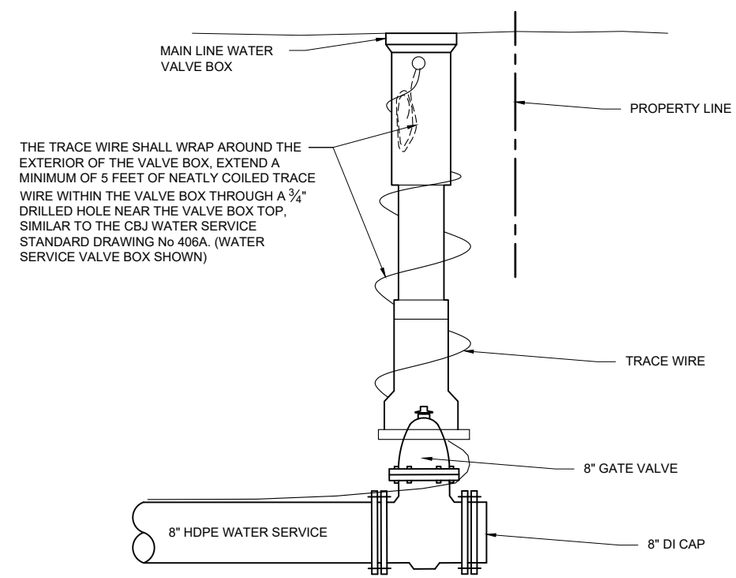

5 / C101 WATER SERVICE VALVE TRACE WIRE TERMINATION DETAIL
SCALE: NTS

P:\2020\20098JN-Bicknell_Delta\CIC\3001cns\20098JN.dwg, PLOT: December 03, 2020 at: 3:59pm Micki Minsch

DESIGN MSM
DRAWN MSM
CHECK JMP
APPROVED JMP
FILE:

No.	DATE	REVISION	BY	APRVD.

DELTA DRIVE SUBDIVISION
JUNEAU, AK

BICKNELL INC. QUALITY CONSTRUCTION

STATE OF ALASKA 49TH Joseph M. Pusich CE 8152 REGISTERED PROFESSIONAL ENGINEER 12/03/20

PDC ENGINEERS
PLAN • DESIGN • CONSTRUCT
A RESPEC COMPANY
907.780.6060 | AECC605
1029 Nemenah Court, Suite 201, Juneau, AK 99801

CONSTRUCTION DETAILS

DATE: Dec 03, 2020
PDC No. 20098JN
SHEET
C101

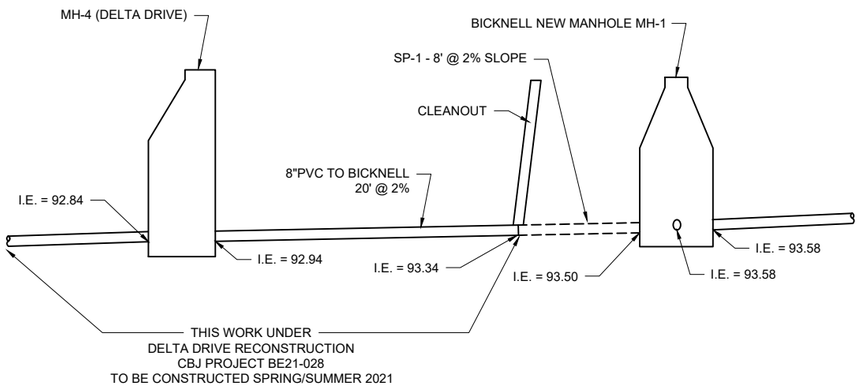

1 / C102 **SEWER PROFILE CONNECTION**

SCALE: NTS

P:\2020\20098JN-Bicknell_Delta\CIC\3001\cnst\20098JN.dwg PLOT: December 03, 2020 at: 3:59pm Mick Minsch

DESIGN MSM
DRAWN MSM
CHECK JMP
APPROVED JMP
FILE:

No.	DATE	REVISION	BY	APRVD.

DELTA DRIVE SUBDIVISION

BICKNELL INC. QUALITY CONSTRUCTION

STATE OF ALASKA 40TH Joseph M. Pusich CE 8152 NORTHERN ALASKA ENGINEERING 12/03/20

PDC ENGINEERS
PLAN • DESIGN • CONSTRUCT
A BESPEC COMPANY
907.780.6060 | AECC605

CONSTRUCTION DETAILS

DATE: Dec 03, 2020
PDC No. 20098JN

SHEET C102

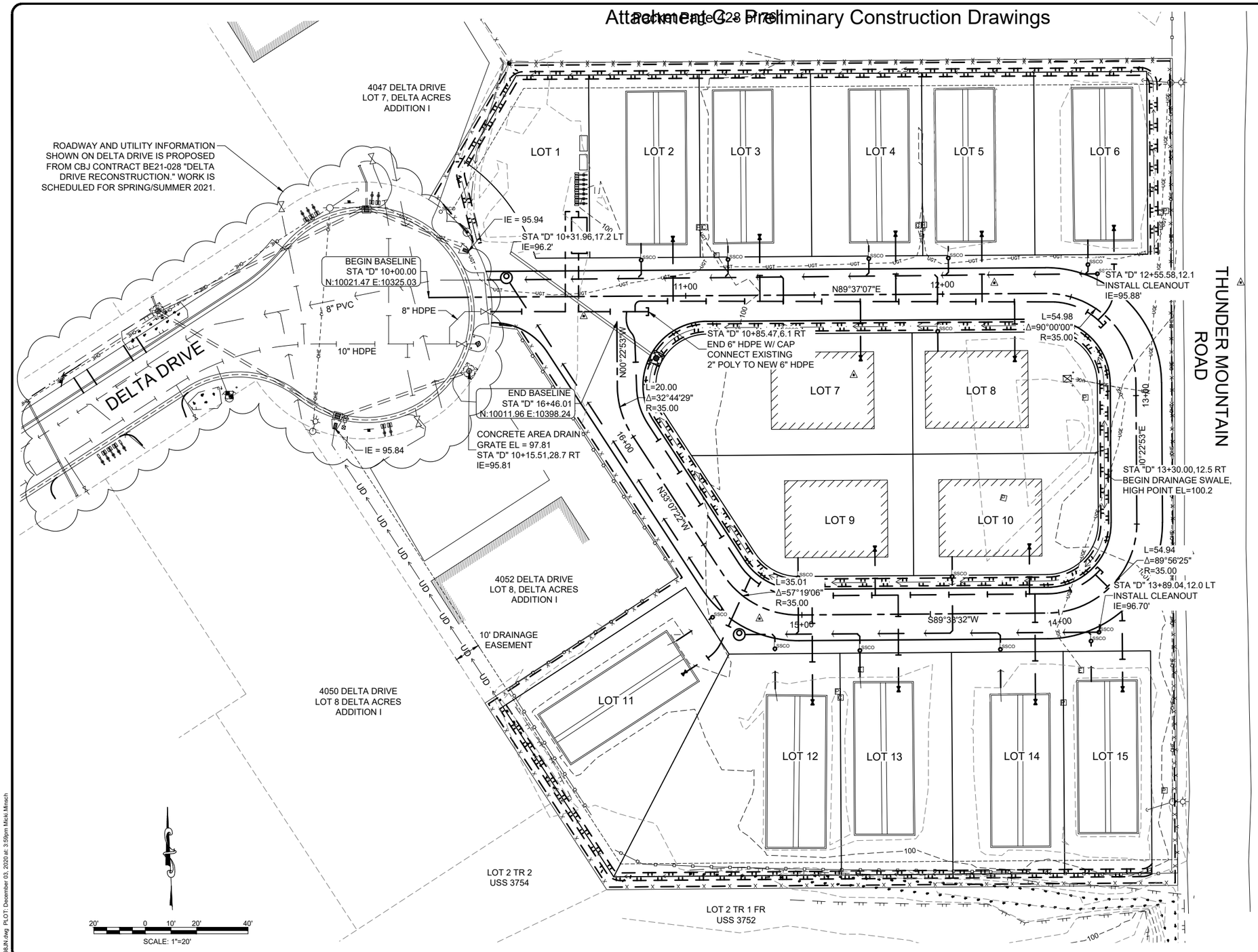

DIAL BEFORE YOU DIG!
586-1333
U/G POWER, TELEPHONE & T.V. SHOWN ON THIS DRAWING INDICATE EXISTENCE ONLY AND DO NOT SUBSTITUTE FOR FIELD LOCATES
FOR ACS AND GCI LOCATES DIAL THE 811 ALASKA DIGLINE

8477 THUNDER MOUNTAIN ROAD
USS 3752 THUNDER MOUNTAIN PARK

P:\2020\20098JN-Bicknell_Delta\C\C200\rsrs\20098JN.dwg PLOT: December 03, 2020 at: 3:59pm Micki.Minsch

DESIGN	MSM
DRAWN	MSM
CHECK	JMP
APPROVED	JMP
FILE:	

No.	DATE	REVISION	BY	APRVD.

DELTA DRIVE SUBDIVISION

LINEAU AT

BICKNELL INC. QUALITY CONSTRUCTION

STATE OF ALASKA 49TH Joseph M. Pusich CE 8152 REGISTERED PROFESSIONAL ENGINEER 12/03/20

PDC ENGINEERS
PLAN • DESIGN • CONSTRUCT
A BESPEC COMPANY
1000 Vermont Street, Suite 1, Juneau, AK 99801
907.780.6060 | AECC605

OVERALL SITE PLAN

DATE: Dec 03, 2020
PDC No. 20098JN

SHEET
C200

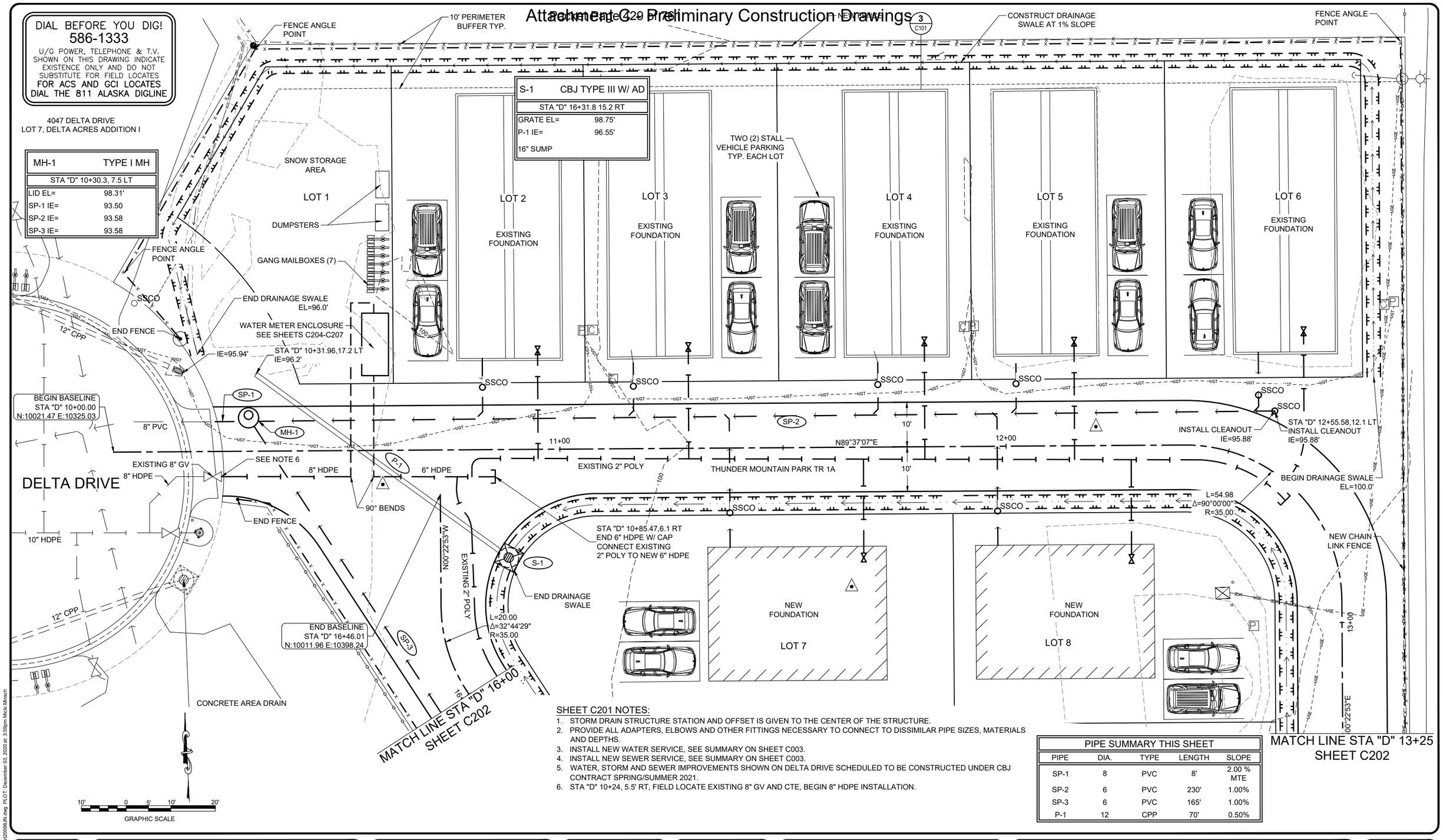

SHEET C201 NOTES:

1. STORM DRAIN STRUCTURE STATION AND OFFSET IS GIVEN TO THE CENTER OF THE STRUCTURE.
2. PROVIDE ALL ADAPTERS, ELBOWS AND OTHER FITTINGS NECESSARY TO CONNECT TO DISSIMILAR PIPE SIZES, MATERIALS AND DEPTHS.
3. INSTALL NEW WATER SERVICE, SEE SUMMARY ON SHEET C003.
4. INSTALL NEW SEWER SERVICE, SEE SUMMARY ON SHEET C003.
5. WATER, STORM AND SEWER IMPROVEMENTS SHOWN ON DELTA DRIVE SCHEDULED TO BE CONSTRUCTED UNDER CBJ CONTRACT SPRING/SUMMER 2021.
6. STA "D" 10+24, 5.5' RT, FIELD LOCATE EXISTING 8" GV AND CTE, BEGIN 8" HDPE INSTALLATION.

PIPE SUMMARY THIS SHEET

PIPE	DIA.	TYPE	LENGTH	SLOPE
SP-1	8	PVC	8'	2.00 % MTE
SP-2	6	PVC	230'	1.00%
SP-3	6	PVC	165'	1.00%
P-1	12	CPP	70'	0.50%

P:\2020\20098JN-Bicknell_Delta\CIC\20010ms\20098JN.dwg PLOT: December 03, 2020 at: 3:59pm Mickl.Mmsch

DESIGN MSM
DRAWN MSM
CHECK JMP
APPROVED JMP
FILE:

No.	DATE	REVISION	BY	APRVD.

DELTA DRIVE SUBDIVISION

LOCATED AT

BICKNELL INC. QUALITY CONSTRUCTION

STATE OF ALASKA 49TH Joseph M. Pusich CE 8152 12/03/20

PDC ENGINEERS
PLAN • DESIGN • CONSTRUCT
A BESPEC COMPANY
Incorporated in Alaska | Licensed in Alaska
907.780.6060 | AECC605

SITE & UTILITY PLAN

DATE: Dec 03, 2020
PDC No. 20098JN
SHEET
C201

SHEET C202 NOTES:

1. STORM DRAIN STRUCTURE STATION AND OFFSET IS GIVEN TO THE CENTER OF THE STRUCTURE. FRAME ELEVATION IS GIVEN TO THE TOP, FRONT OF FRAME.
2. PROVIDE ALL ADAPTERS, ELBOWS AND OTHER FITTINGS NECESSARY TO CONNECT TO DISSIMILAR PIPE SIZES, MATERIALS AND DEPTHS.
3. INSTALL NEW WATER SERVICE, SEE SUMMARY ON SHEET C003.
4. INSTALL NEW SEWER SERVICE, SEE SUMMARY ON SHEET C003.

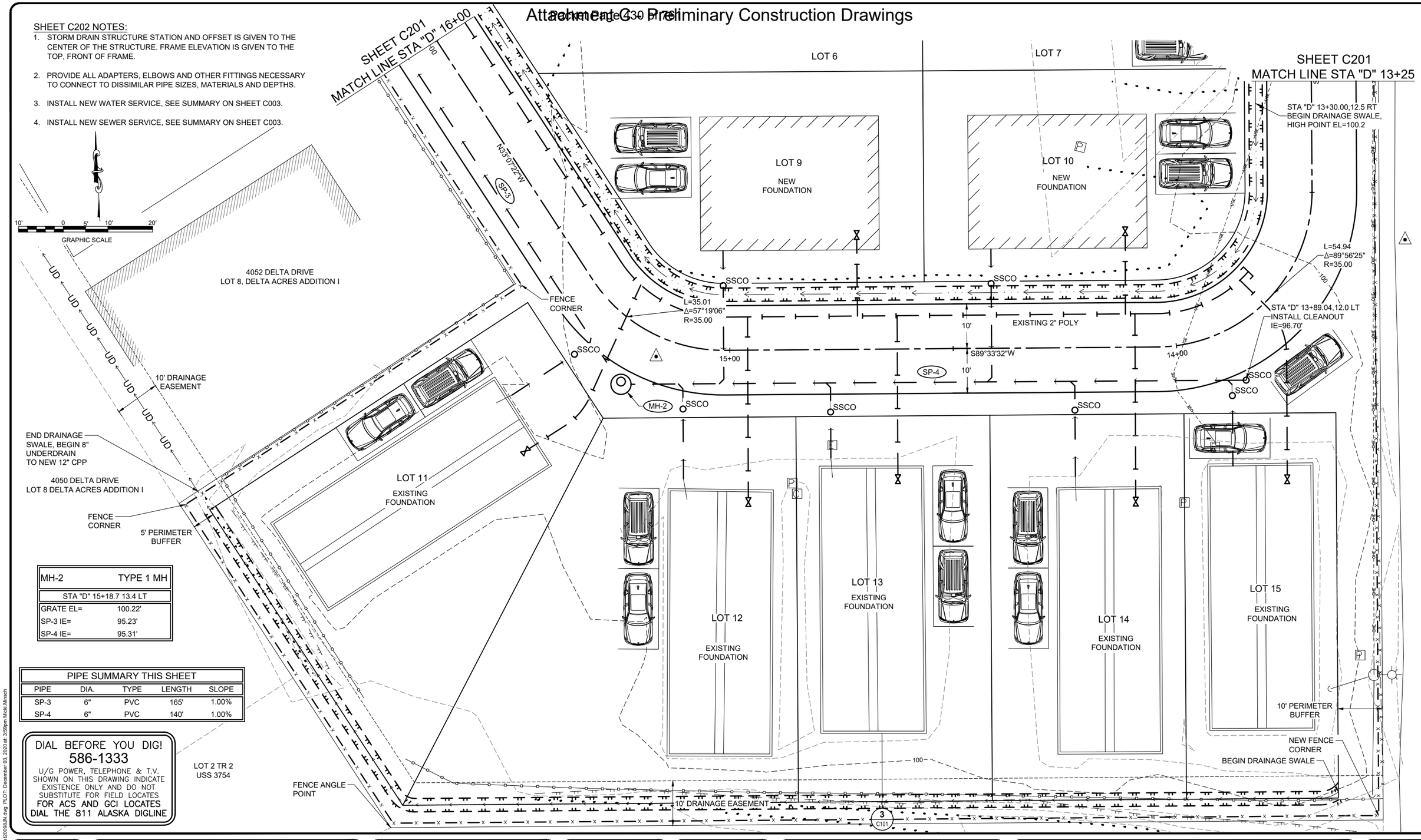

MH-2	TYPE 1 MH
STA "D" 15+18.7 13.4 LT	
GRATE EL=	100.22'
SP-3 IE=	95.23'
SP-4 IE=	95.31'

PIPE SUMMARY THIS SHEET				
PIPE	DIA.	TYPE	LENGTH	SLOPE
SP-3	6"	PVC	165'	1.00%
SP-4	6"	PVC	140'	1.00%

DIAL BEFORE YOU DIG!
586-1333
U/G POWER, TELEPHONE & T.V. SHOWN ON THIS DRAWING INDICATE EXISTENCE ONLY AND DO NOT SUBSTITUTE FOR FIELD LOCATES
FOR ACS AND GCI LOCATES
DIAL THE 811 ALASKA DIGLINE

DESIGN MSM
DRAWN MSM
CHECK JMP
APPROVED JMP
FILE:

No.	DATE	REVISION	BY	APRVD.

DELTA DRIVE SUBDIVISION

DELTA JUNCTION, AK

BICKNELL INC. QUALITY CONSTRUCTION

STATE OF ALASKA 49TH Joseph M. Pusich CE 8152 REGISTERED PROFESSIONAL ENGINEER 12/03/20

PDC ENGINEERS
PLAN • DESIGN • CONSTRUCT
A BESPEC COMPANY
1600 Ingram Street, Suite 2, Juneau, AK 99801
907.780.6060 | AECC605

SITE & UTILITY PLAN

DATE: Dec 03, 2020
PDC No. 20098JN

SHEET
C202

P:\2020\20098JN-Bicknell_Delta\CC2001cna\20098JN.dwg PLOT: December 03, 2020 at: 3:59pm Micki Minsch

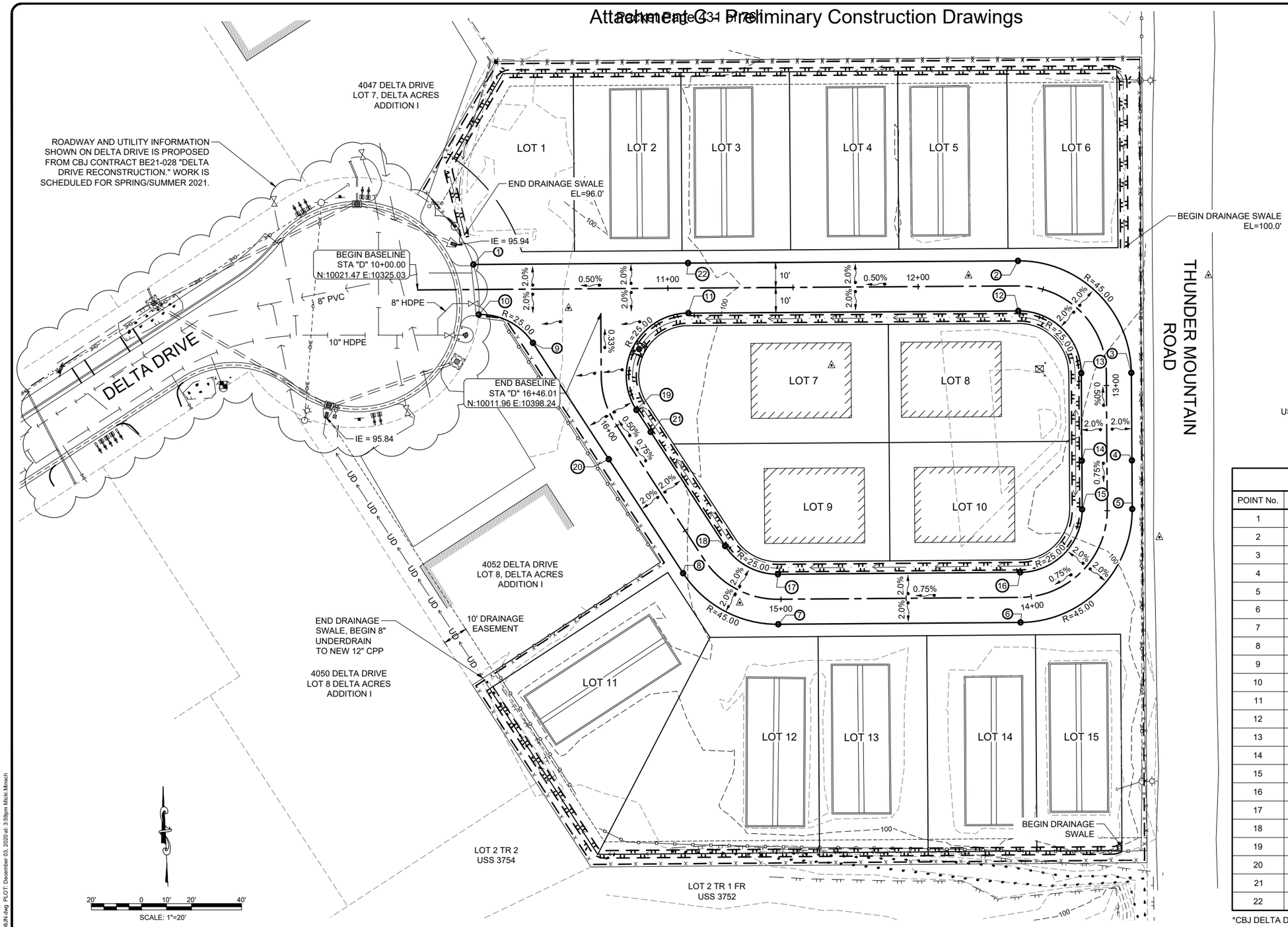

DIAL BEFORE YOU DIG!
586-1333
U/G POWER, TELEPHONE & T.V. SHOWN ON THIS DRAWING INDICATE EXISTENCE ONLY AND DO NOT SUBSTITUTE FOR FIELD LOCATES
FOR ACS AND GCI LOCATES DIAL THE 811 ALASKA DIGLINE

GRADE POINT SUMMARY TABLE THIS SHEET

POINT No.	NORTHING	EASTING	ELEVATION	DESCRIPTION
1	10031.62	10347.33	98.29 *	EDGE OF PAVEMENT/MTE
2	10033.07	10564.96	100.32	EDGE OF PAVEMENT/PC
3	9988.37	10610.26	100.88	EDGE OF PAVEMENT/PT
4	9953.35	10610.49	101.24	EDGE OF PAVEMENT/HIGH POINT
5	9933.92	10610.62	101.09	EDGE OF PAVEMENT/PC
6	9888.64	10565.97	100.68	EDGE OF PAVEMENT/PT
7	9887.89	10469.17	99.97	EDGE OF PAVEMENT/PC
8	9908.30	10431.14	99.67	EDGE OF PAVEMENT/PT
9	10000.30	10371.11	98.59	EDGE OF PAVEMENT/PC
10	10011.64	10349.47	98.34 *	EDGE OF PAVEMENT/PT/MTE
11	10012.19	10433.23	99.66	EDGE OF PAVEMENT/PT
12	10013.07	10565.10	100.32	EDGE OF PAVEMENT/PC
13	9988.24	10590.26	100.88	EDGE OF PAVEMENT/PT
14	9953.22	10590.50	101.24	EDGE OF PAVEMENT/HIGH POINT
15	9933.79	10590.62	101.09	EDGE OF PAVEMENT/PC
16	9908.64	10565.82	100.68	EDGE OF PAVEMENT/PT
17	9907.89	10469.02	99.97	EDGE OF PAVEMENT/PC
18	9919.17	10447.92	99.67	EDGE OF PAVEMENT/PT
19	9973.53	10412.46	99.19	EDGE OF PAVEMENT/PC
20	9953.85	10401.42	99.29	EDGE OF PAVEMENT
21	9964.78	10418.17	99.29	EDGE OF PAVEMENT
22	10032.19	10433.09	99.66	EDGE OF PAVEMENT

*CBJ DELTA DRIVE RECONSTRUCTION TOP OF ASPHALT PAVEMENT ELEVATION

P:\2020\20098JN-Bicknell_Delta\CIC\2001ms\20098JN.dwg PLOT: December 03, 2020 at: 3:59pm Mickl.Mmsch

DESIGN MSM
DRAWN MSM
CHECK JMP
APPROVED JMP
FILE:

No.	DATE	REVISION	BY	APRVD.

DELTA DRIVE SUBDIVISION
JUNEAU, AK

BICKNELL INC. QUALITY CONSTRUCTION

STATE OF ALASKA 49TH Joseph M. Pusich CE 8152 REGISTERED PROFESSIONAL ENGINEER 12/03/20

PDC ENGINEERS
PLAN • DESIGN • CONSTRUCT
A DESPER COMPANY
1000 Vanderbilt Court, Suite 101, Juneau, AK 99801
907.780.6060 | AECC605

GRADING PLAN

DATE: Dec 03, 2020
PDC No. 20098JN
SHEET
C203

NOTES:

1. CBJ SPECIFICATION 02601 - WATER SYSTEM AND 02602 - VALVES, AND OTHER CBJ STANDARD SPECIFICATIONS APPLY EXCEPT AS MODIFIED BELOW.
2. ALL JOINTS BETWEEN THE CONNECTIONS TO THE MAINLINES ON BOTH SIDES OF THE METER ENCLOSURE SHALL BE RESTRAINED.
3. ALL BOLTS, NUTS AND WASHERS SHALL BE SERIES 300 STAINLESS STEEL.
4. ALL METALLIC VALVES AND FITTINGS SHALL BE FACTORY EPOXY COATED INSIDE AND OUT, 8 MILS MINIMUM.
5. BURIED FITTINGS SHALL BE THRUST BLOCKED PER CBJ STANDARD DETAILS.
6. DIP, HDPE PIPE AND PIPE STANDS ARE PER CBJ SECTION 02602.
7. ALL PIPE AND SPOOL PIECES ABOVE GRADE ARE TO BE FLANGED, WITH 125# FLANGES. USE A FLANGE ADAPTOR WITH THE CONNECTION TO HDPE.
8. GATE VALVES SHALL HAVE HAND WHEELS.
9. PRESSURE GAUGE IS TO BE STAINLESS STEEL, GLYCERIN FILLED, WITH A 3½ OR 4-INCH FACE AND 150 TO 160 PSI PRESSURE RANGE.
10. THE GATE VALVE AHEAD OF THE METER IS TO BE FLXFL, WHILE THE VALVES ON EITHER SIDE OF THE DOUBLE CHECK MAY BE FLXVIC. VALVES SHALL COMPLY WITH AWWA C509 OR C515.
11. THE METER SHALL BE A 4-INCH NEPTUNE TRUFLO COMPOUND METER WITH A STRAINER.
12. THE DOUBLE CHECK VALVE SHALL BE A 6-INCH ZURN 350A WITH THE GATE VALVES, OR APPROVED EQUAL. THE DOUBLE CHECK SHALL MEET THE REQUIREMENTS OF AWWA C510 AND BE ASSE AND NSF LISTED.
13. TWO DUPLEX 120-V ELECTRICAL OUTLETS SHALL BE INSTALLED INSIDE THE ENCLOSURE. CONDUIT SHALL RUN FROM THE EXTERIOR MOUNTED DISCONNECT BOX NEAR THE ELECTORAL METER, UNDERGROUND, AND COME UP THROUGH THE CONCRETE SLAB. THE OUTLETS SHALL BE MOUNTED ABOVE THE FLOOR AND LOCATED FOR EASY ACCESS THROUGH THE PANELS.
14. ALL ELECTRICAL WORK SHALL BE PERFORMED BY A LICENSED ELECTRICIAN AND COMPLY WITH ALL APPROPRIATE ELECTRICAL CODES. ANY REQUIRED ELECTRICAL PERMITS SHALL BE OBTAINED. COORDINATE WITH THE LOCAL ELECTRICAL UTILITY AS NECESSARY AND PROVIDE ANY EQUIPMENT THEY REQUIRE TO COMPLETE THEIR SERVICE TO THIS LOCATION.

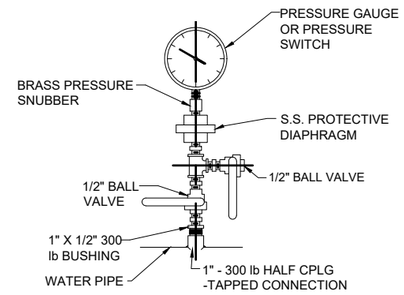

1 C204 **PRESSURE GAUGE OR SWITCH**
SCALE: NTS

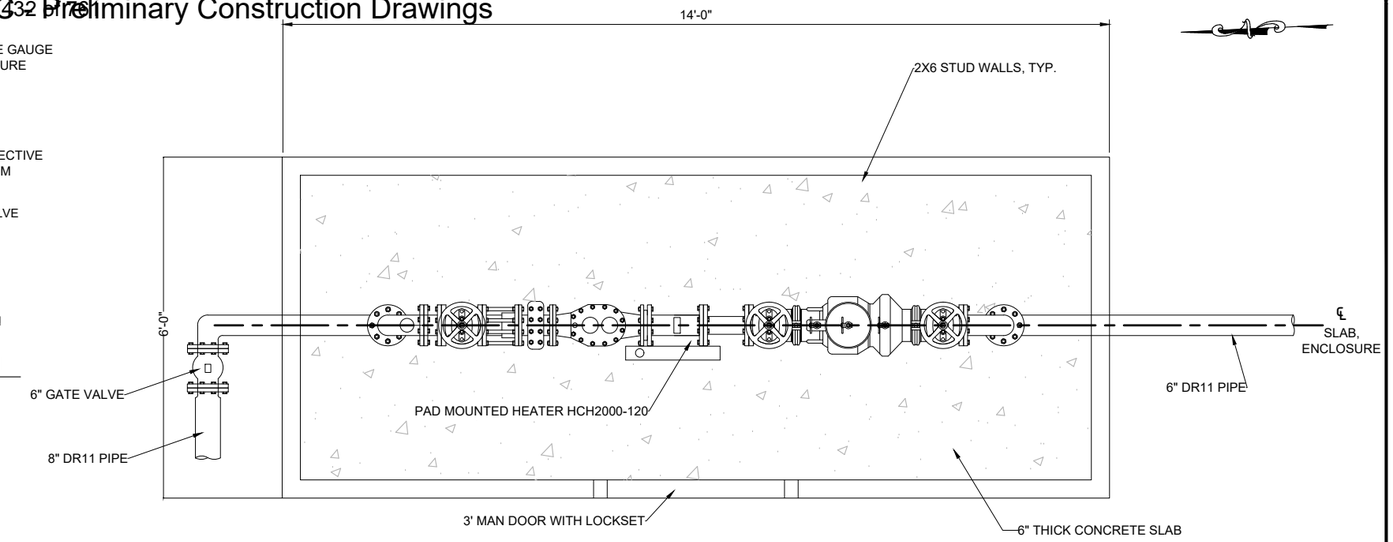

2 C204 **WATER METER ENCLOSURE - PLAN**
SCALE: NTS

NOTES:
1. ALL JOINTS TO BE FUSED, FLANGED, OR RESTRAINED TO WITHSTAND A MINIMUM PRESSURE OF 200 PSI.

DESIGNATION	COMPONENT DESCRIPTION
A	6X4" DI REDUCING 90° ELBOW W/ TAP AND 1" AIR RELEASE VALVE
B	4" NRS GATE VALVE
C	4" DISMANTLING JOINT, SET TO 8" ±
D	4" METER W/ STRAINER
E	4" DI PIPE SPOOL W/ 1" TAPPED CONNECTION, SAMPLING PORT, AND PRESSURE GAGUE (SEE DETAIL)
F	4" SPOOL PIECE
G	4" DOUBLE CHECK VALVE
H	4" DI 90° BEND

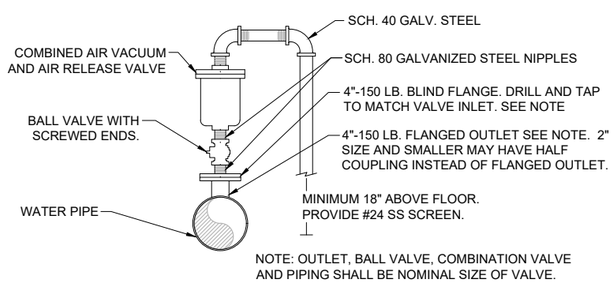

3 C204 **AIR/VACUUM & AIRE RELEASE VALVE ASSEMBLY**
SCALE: NTS

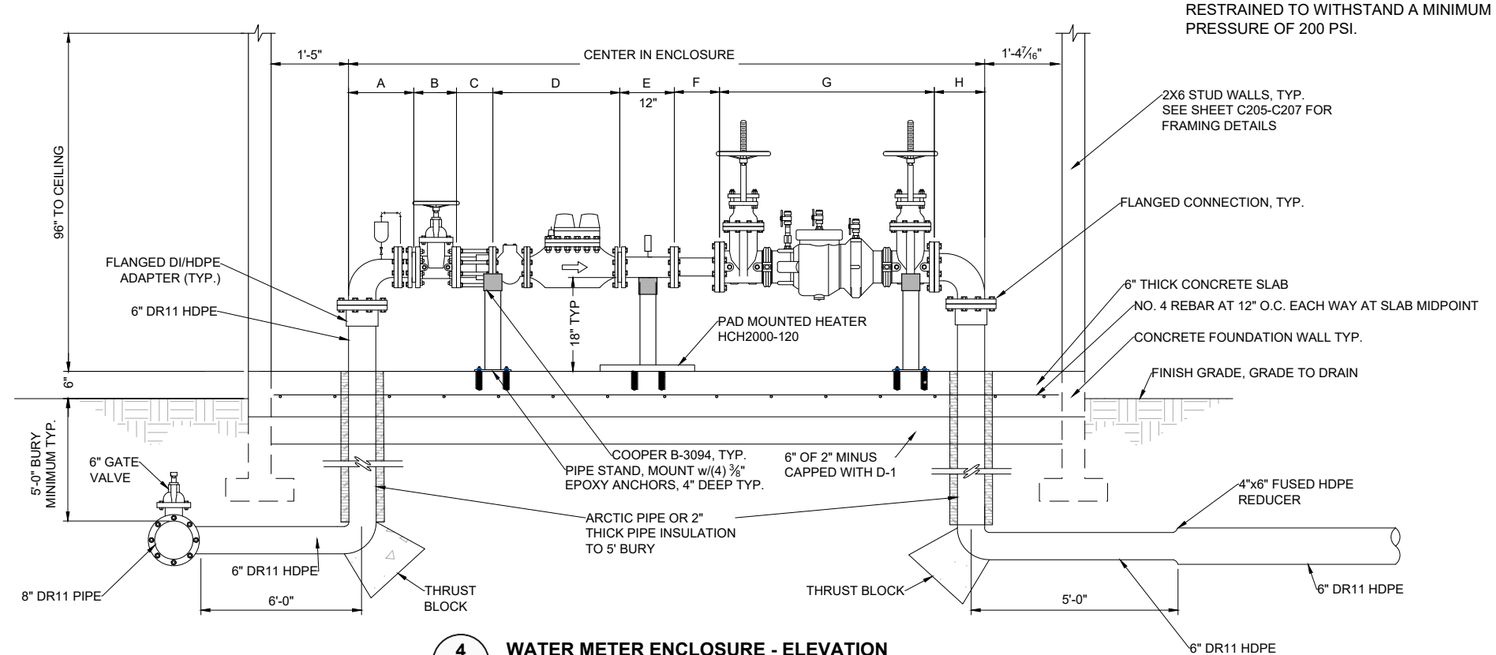

4 C204 **WATER METER ENCLOSURE - ELEVATION**
SCALE: NTS

DESIGN MSM
DRAWN MSM
CHECK JMP
APPROVED JMP
FILE:

No.	DATE	REVISION	BY	APRVD.

DELTA DRIVE SUBDIVISION
JUNEAU, AK

BICKNELL INC. QUALITY CONSTRUCTION

STATE OF ALASKA 49TH Joseph M. Pusich CE 8152 REGISTERED PROFESSIONAL ENGINEER 12/03/20

PDC ENGINEERS
PLAN • DESIGN • CONSTRUCT
A BESPEC COMPANY
907.780.6060 | AECC605

WATER METER ENCLOSURE DETAILS

DATE: Dec 03, 2020
PDC No. 20098JN
SHEET C204

P:\2020\20098JN-Bicknell_Delta\DC2001\cns\20098JN.dwg PLOT: December 03, 2020 at: 3:59pm Micki.Minsch

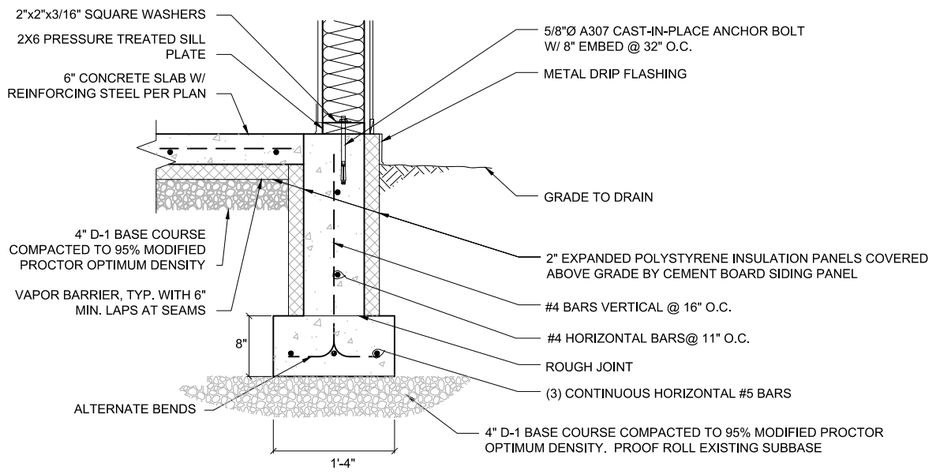

1 / C205 FOUNDATION AND STEM WALL DETAIL
SCALE: NTS

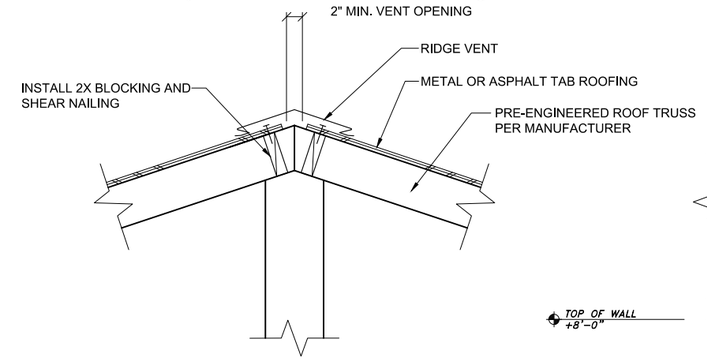

2 / C205 ROOF RIDGE VENT DETAIL
SCALE: NTS

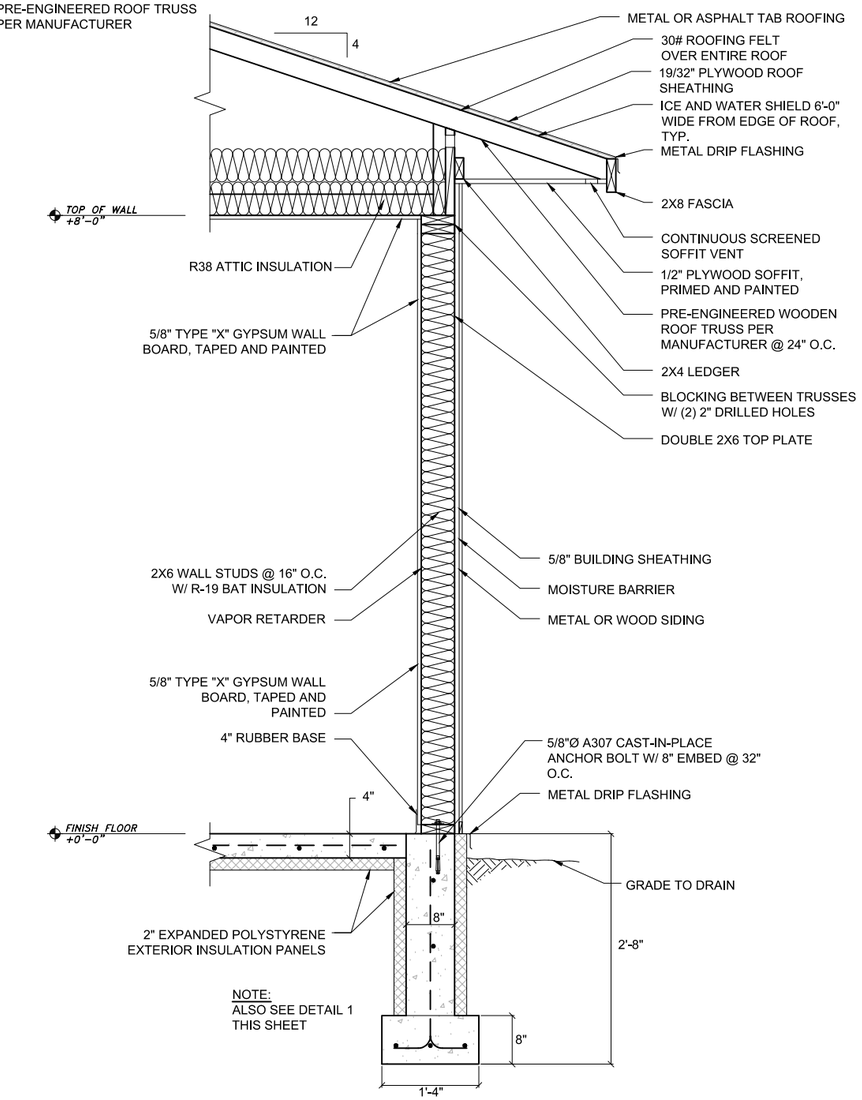

5 / C205 WALL SECTION
SCALE: NTS

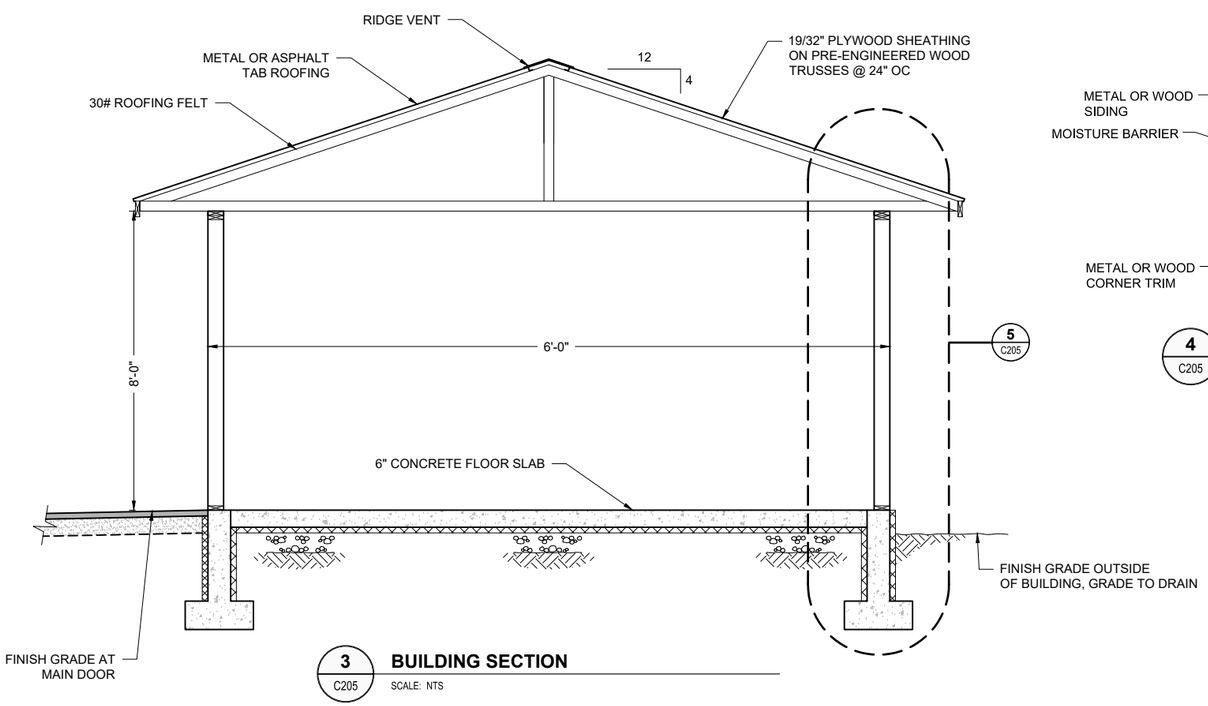

3 / C205 BUILDING SECTION
SCALE: NTS

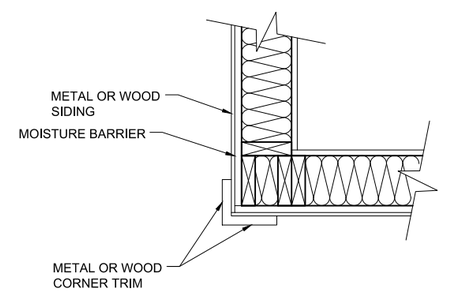

4 / C205 OUTSIDE CORNER DETAIL
SCALE: NTS

P:\2020\20098JN-Bicknell_Delta\DC\2001cns\20098JN.dwg PLOT: December 03, 2020at: 3:59pm Micki Minsch

DESIGN	MSM
DRAWN	MSM
CHECK	JMP
APPROVED	JMP
FILE:	

No.	DATE	REVISION	BY	APRVD.

DELTA DRIVE SUBDIVISION
JUNEAU, AK

BICKNELL INC. QUALITY CONSTRUCTION

STATE OF ALASKA 49TH Joseph M. Pusich CE 8152 12/03/20

PDC ENGINEERS
PLAN • DESIGN • CONSTRUCT
A ESPEE COMPANY
907.780.6060 | AECC605

WATER METER ENCLOSURE DETAILS

DATE: Dec 03, 2020
PDC No. 20098JN
SHEET C205

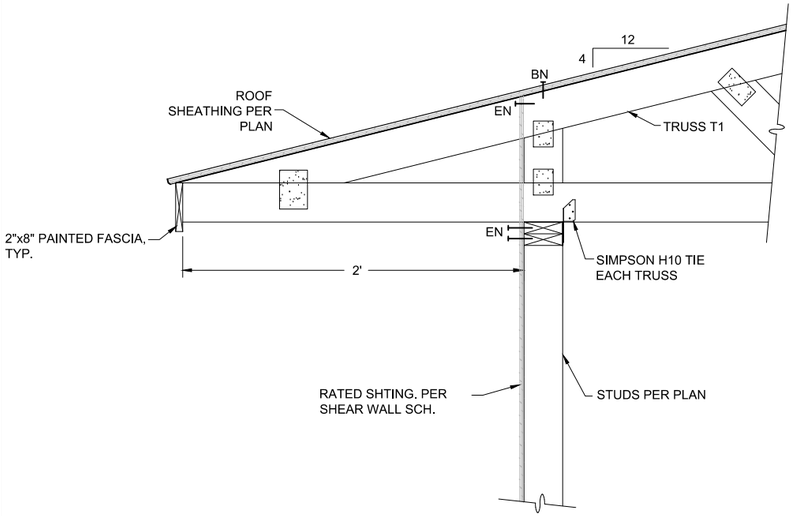

1 C206 **ROOF TRUSS TO WALL CONNECTION**
SCALE: NTS

NOTES:
1. WHERE NO STUD TO STUD NAILING IS INDICATED, NAIL STUDS TOGETHER w/ 16d @ 12"o.c., TYP.
2. REF. PLANS FOR STUD SIZE & SPACING

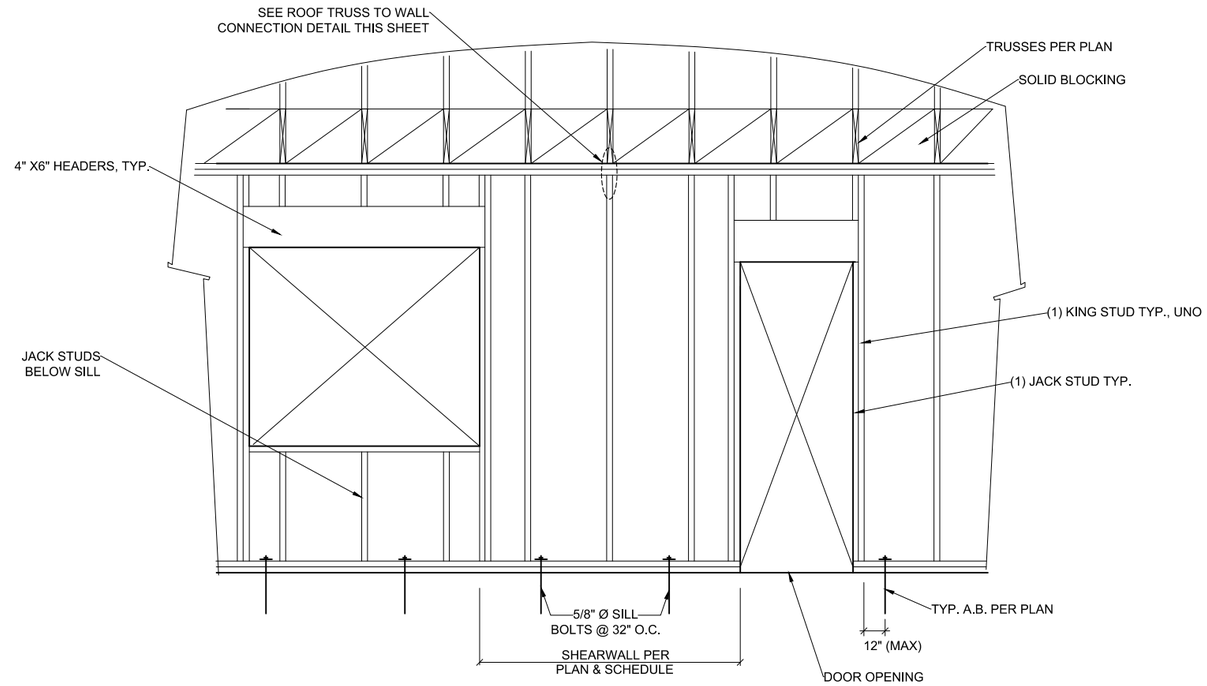

3 C206 **TYPICAL STUD FRAMING**
SCALE: NTS

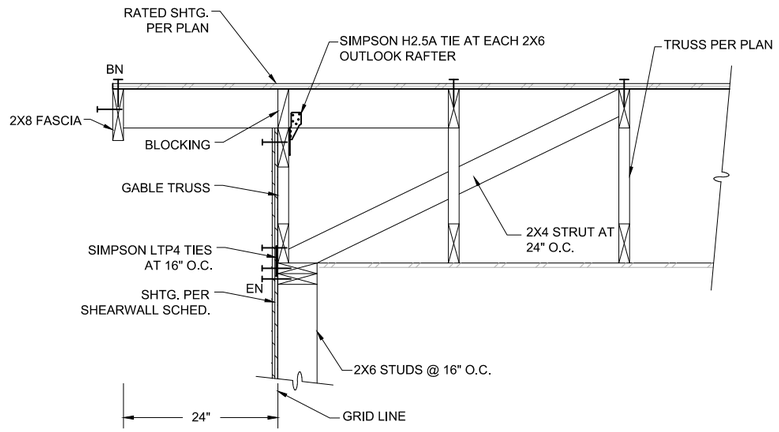

2 C206 **GABLE END DETAIL**
SCALE: NTS

FRAMING NAILING SCHEDULE

CONNECTION	NAILING	CONNECTION	NAILING
TOP PLATE TO STUD, END NAIL	2x4 (2)- 16d 2x6 (3)- 16d 1 3/4"x5 1/2" LVL (3)-16d 1 3/4"x7 1/4" LVL (4)-16d 1 3/4"x9 1/4" LVL (5)-16d 1 3/4"x11 1/4" LVL (6)-16d	TOP PLATE LAPS (4'-0" MINIMUM)	16d AT 6" O.C.
STUD TO SILL PLATE, END NAIL	2x4 (2)- 16d 2x6 (3)- 16d 1 3/4"x5 1/2" LVL (3)-16d 1 3/4"x7 1/4" LVL (4)-16d 1 3/4"x9 1/4" LVL (5)-16d 1 3/4"x11 1/4" LVL (6)-16d	BUILT-UP HEADERS AND BEAMS	16d AT 16" O.C. ALONG TOP AND BOTTOM EDGE
DOUBLE SILL PLATES, FACE NAIL (STAGGER)	10d AT 12" O.C.	BUILT-UP COLUMNS BELOW BEAMS, FACE NAIL	16d AT 16" O.C. - EACH FACE
DOUBLE STUDS, FACE NAIL (STAGGER)	10d AT 12" O.C. - EACH FACE	BUILT-UP CORNER STUDS (3 STUDS MINIMUM)	16d AT 24" O.C.
DOUBLE TOP PLATES, FACE NAIL	16d AT 24" O.C.	BACKING AND BLOCKING AT TRUSSES AND 2x FRAMING, END NAIL OR TOE NAIL	(2)- 16d EACH END
TOP PLATES AT WALL INTERSECTIONS, FACE NAIL	(2)- 16d	BACKING AND BLOCKING AT I-JOIST FRAMING	SIMPSON Z2 OR EQUAL AT EACH END [W/(4)-10dx1 1/2" NAILS]

P:\2020\20098JN-Bicknell_Delta\CC2001cns\20098JN.dwg PLOT: December 03, 2020 at 3:59pm Micki Minsch

DESIGN MSM
DRAWN MSM
CHECK JMP
APPROVED JMP
FILE:

No.	DATE	REVISION	BY	APRVD.

DELTA DRIVE SUBDIVISION

JUNEAU, AK

BICKNELL INC. QUALITY CONSTRUCTION

STATE OF ALASKA 49TH Joseph M. Pusich CE 8152 REGISTERED PROFESSIONAL ENGINEER 12/03/20

PDC ENGINEERS
PLAN • DESIGN • CONSTRUCT
A RESPEC COMPANY
907.780.6060 | AECC605

WATER METER ENCLOSURE DETAILS

DATE: Dec 03, 2020
PDC No. 20098JN

SHEET C206

Attachment A - SMP2020 0004 Preliminary Plat Notice of Decision and Staff Report

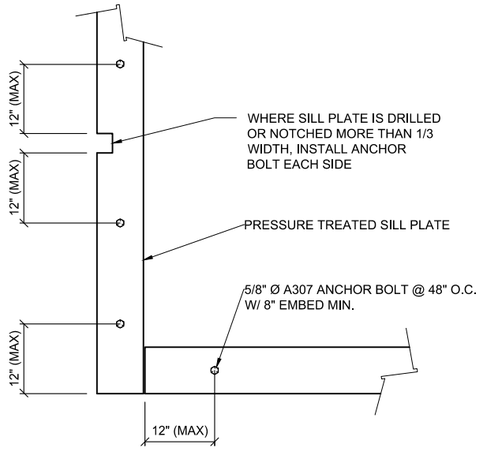

PLAN VIEW

1 C207 SILL PLATE BOLTING TO CONCRETE
SCALE: NTS

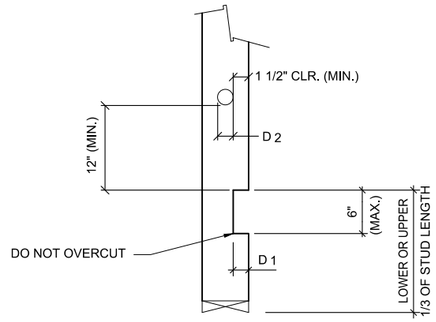

BEARING WALLS		
STUD SIZE	MAX. D 1 (NOTCH)	MAX. D 2 (HOLE)
2x6	1 1/4"	1 1/2"

2 C207 ALLOWABLE HOLES AND NOTCHES IN STUDS
SCALE: NTS

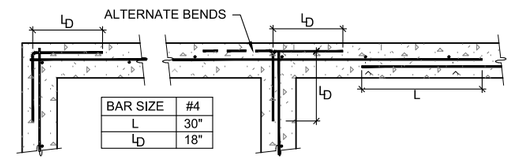

BAR SIZE	#4
L	30"
L_D	18"

SINGLE CURTAIN @ STEM WALLS

3 C207 WALL & FOOTING REINFORCING AT CORNERS & INTERSECTIONS
SCALE: NTS

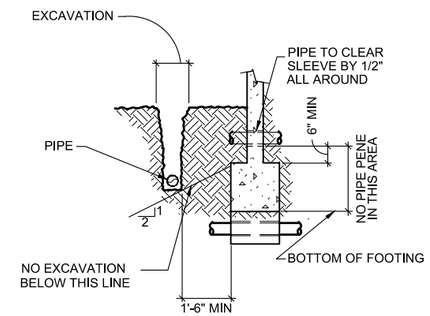

FOOTING SECTION

4 C207 PIPES & TRENCHES AT FOUNDATIONS
SCALE: NTS

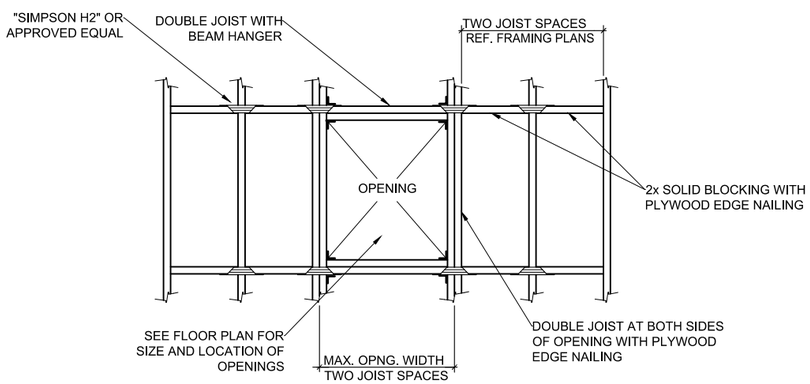

5 C207 TYP. OPENINGS IN FLOORS AND ROOF
SCALE: NTS

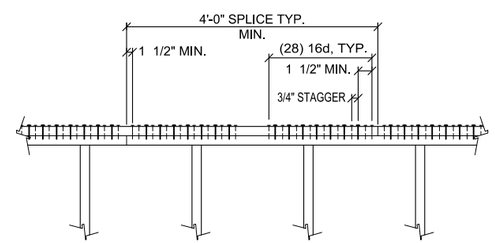

NAILED SPLICE

NOTES:

1. MINIMUM PLATE SPLICE IS (28) 16d EA. SIDE OF EA. PLATE JOINT. MSTC78 IS ALTERNATE.
2. STAGGER NAILS IN 2 ROWS.
3. OCCURS AT TOP PLATES UNDER ROOF.

6 C207 TYPICAL PLATE SPICE
SCALE: NTS

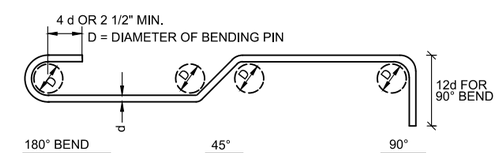

BAR SIZE	MIN. PIN DIA.
#3 THRU #8	6 BAR DIA.

LEGEND (FOR REINF. BENDS NOT SHOWN TO SCALE)

- DENOTES 90° BEND IN THE PLANE OF THE DWG.
- DENOTES 90° BEND PERPENDICULAR TO THE PLANE OF THE DWG.
- DENOTES BEND PERPENDICULAR TO THE PLANE OF THE DWG.
- DENOTES BEND IN THE PLANE OF THE DWG.
- DENOTES OFFSET IN THE PLANE OF THE DWG.

7 C207 STANDARD HOOKS AND BENDS
SCALE: NTS

P:\2020\20098JN-Bicknell_Delta\CIC2001\cnst20098JN.dwg PLOT: December 03, 2020 at: 3:59pm Micki.Minsch

DESIGN MSM
DRAWN MSM
CHECK JMP
APPROVED JMP
FILE:

No.	DATE	REVISION	BY	APRVD.

DELTA DRIVE SUBDIVISION
JUNEAU, AK

BICKNELL INC. QUALITY CONSTRUCTION

STATE OF ALASKA 49TH Joseph M. Pusich CE 8152 REGISTERED PROFESSIONAL ENGINEER 12/03/20

PDC ENGINEERS
PLAN • DESIGN • CONSTRUCT
A BESPEC COMPANY
100 Venetia Way, Suite 3, Juneau, AK 99801
907.780.6060 | AECC605

WATER METER ENCLOSURE DETAILS

DATE: Dec 03, 2020
PDC No. 20098JN
SHEET
C207

ESCP LEGEND

STRAW WATTLE

SILT SACK BMP

TEMPORARY ROCK ACCESS

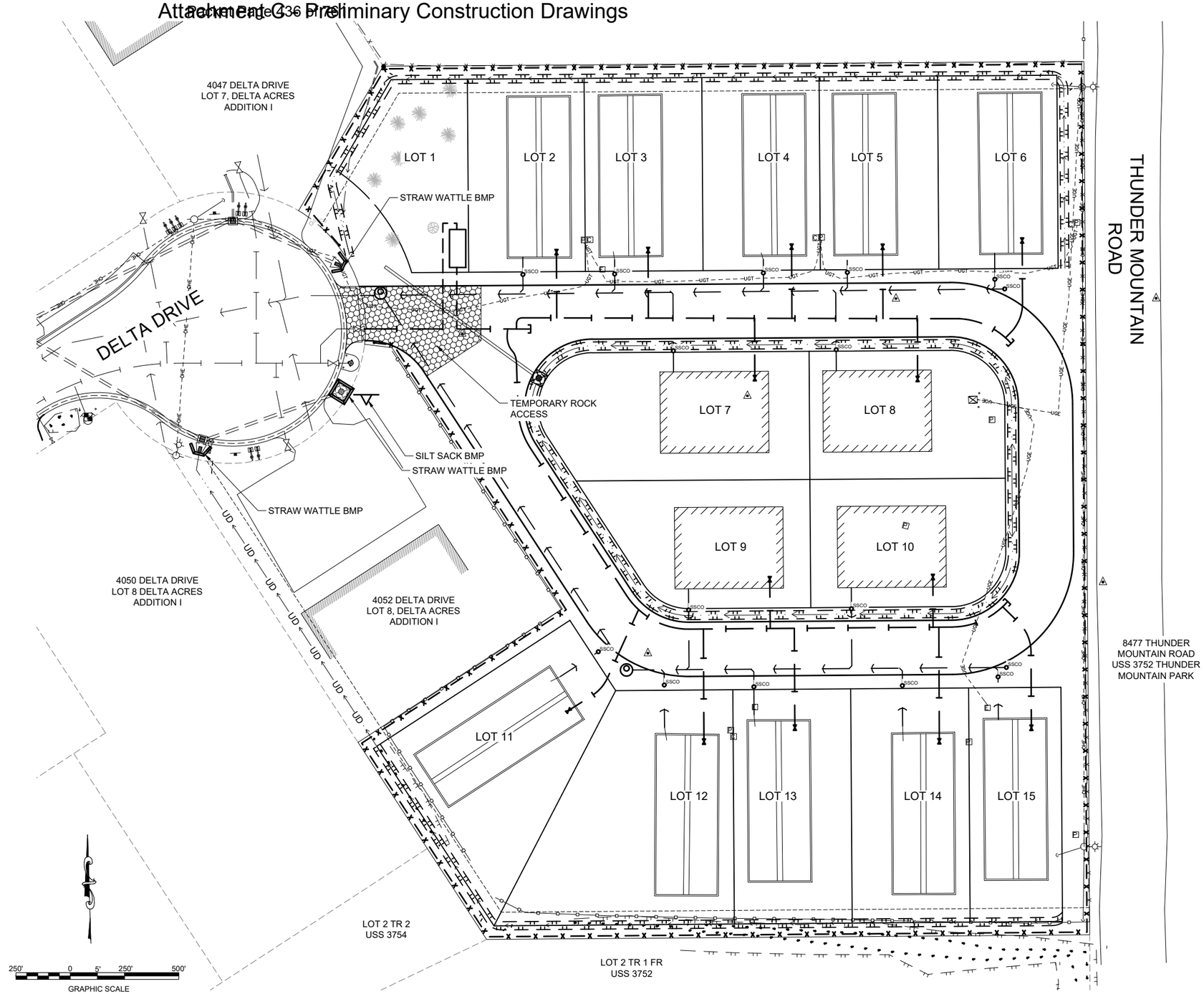

DESIGN	MSM
DRAWN	MSM
CHECK	JMP
APPROVED	JMP
FILE:	

No.	DATE	REVISION	BY	APRVD.

DELTA DRIVE SUBDIVISION

BICKNELL INC. QUALITY CONSTRUCTION

STATE OF ALASKA 749TH Joseph M. Pusich CE 8152 REGISTERED PROFESSIONAL ENGINEER 12/03/20

PDC ENGINEERS
PLAN • DESIGN • CONSTRUCT
A BESPEC COMPANY
907.780.6060 | AECC605

EROSION & SEDIMENT CONTROL PLAN

DATE: Dec 03, 2020
PDC No. 20098JN

SHEET C300

P:\2020\20098JN-Bicknell_Delta\CIC600\cns\20098JN.dwg PLOT: December 03, 2020 at: 4:00pm Micki Minsch

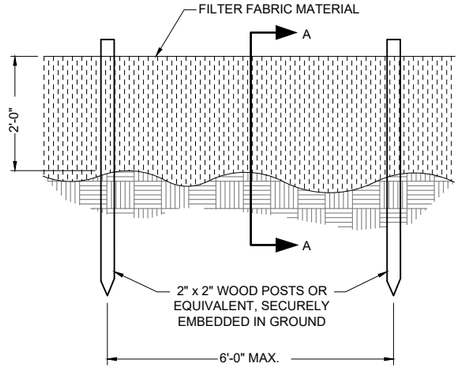

ELEVATION VIEW

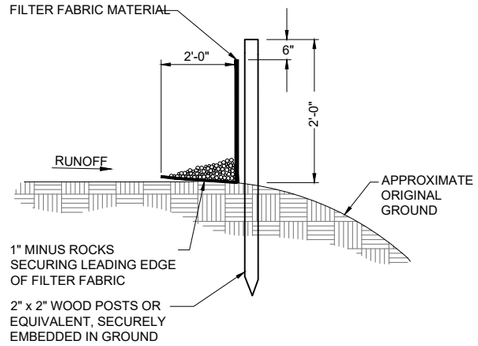

SECTION "A-A"

1 / C301 SILT FENCE DETAIL

SCALE: NTS

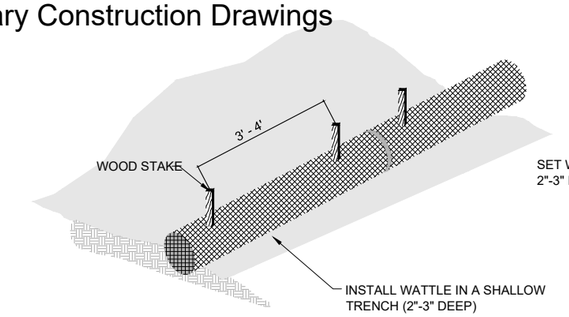

TYPICAL WATTLE ELEVATION VIEW

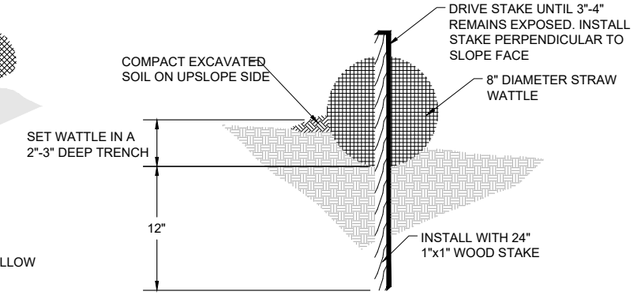

WATTLE ENTRENCHMENT

WATTLE NOTES:

1. BEGIN AT THE LOCATION WHERE THE WATTLE IS TO BE INSTALLED BY EXCAVATING A 2"-3" DEEP x 9" WIDE TRENCH ALONG THE CONTOUR OF THE SLOPE. EXCAVATED SOIL SHOULD BE PLACED UP-SLOPE FROM THE ANCHOR TRENCH.
2. PLACE THE WATTLE IN THE TRENCH SO THAT IT CONTOURS TO THE SOIL SURFACE. COMPACT SOIL FROM THE EXCAVATED TRENCH AGAINST THE WATTLE ON THE UPHILL SIDE. ADJACENT WATTLES SHOULD TIGHTLY ABUT EACH OTHER.
3. SECURE THE WATTLE WITH 24" STAKES EVERY 3-4' AND WITH A STAKE ON EACH END. STAKES SHOULD BE DRIVEN THROUGH THE MIDDLE OF THE WATTLE LEAVING AT LEAST 3-4" OF STAKE EXTENDING ABOVE THE WATTLE. STAKES SHOULD BE DRIVEN PERPENDICULAR TO SLOPE FACE.

2 / C301 STRAW WATTLE IN GROUND DETAIL

SCALE: NTS

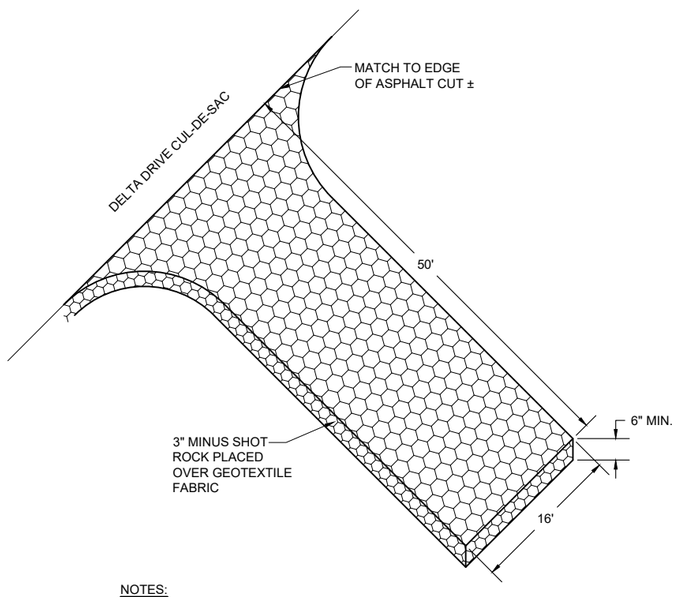

NOTES:

1. MAINTENANCE OF TEMPORARY ROCK ACCESS SHALL INCLUDE REPLACING ROCK AS REQUIRED TO MAINTAIN AN EFFECTIVE AREA FOR SHEDDING EARTHEN MATERIAL FROM CONSTRUCTION EQUIPMENT AND PREVENTING MATERIAL FROM GETTING TRACKED ON TO DELTA DRIVE.
2. CLEAN AND REMOVE ALL TRACKED MATERIAL (MUD, SILT, DEBRIS, ETC.) OFF OF THE PROJECT SITE DAILY AND DISPOSE OF MATERIAL AT AN APPROVED DISPOSAL LOCATION.
3. TEMPORARY ROCK ACCESS APPROACHES SHALL BE INSTALLED AS SHOWN ON THE EROSION AND SEDIMENT CONTROL PLAN OR AS DIRECTED BY THE ENGINEER.

3 / C301 TEMPORARY ROCK ACCESS

SCALE: NTS

EROSION AND SEDIMENT CONTROL NOTES:

1. EROSION AND SEDIMENT CONTROL PLANS (E.S.C.P.) SHOWN ARE INTENDED AS A MINIMUM LEVEL OF EROSION CONTROL ONLY. THE E.S.C.P. IS TO BE USED BY THE CONTRACTOR TO DEVELOP A SITE SPECIFIC STORM WATER POLLUTION PREVENTION PLAN (SWPPP). ALL SEDIMENTATION FROM ON SITE DRAINAGE AND GRADING SHALL BE CONTAINED ON SITE. THE CONTRACTOR IS SOLELY RESPONSIBLE FOR DAMAGE TO ADJACENT PROPERTIES AND STREAMS FROM CONSTRUCTION RELATED EROSION AND SILTATION DURING THE COURSE OF WORK. ANY DAMAGE RESULTING FROM SUCH EROSION AND SILTATION SHALL BE CORRECTED AT THE EXPENSE OF THE CONTRACTOR.
2. ALL EROSION CONTROL/SEDIMENTATION CONTROL BARRIERS SHALL BE IN PLACE PRIOR TO COMMENCING EXCAVATION OR FILLING OPERATIONS.
3. TEMPORARY EROSION CONTROL SYSTEM WILL NOT BE REMOVED UNTIL GERMINATION OF SEEDING AND NO EROSION/SEDIMENT PROBLEMS EXIST.
4. COLLECTED SEDIMENT WILL BE DISPOSED OF OFF SITE AT AN EXISTING APPROVED DUMPSITE. COLLECTED SEDIMENT MAY NOT BE USED AS EMBANKMENT.
5. DEWATERING OF WORK AREAS BY PUMPING SHALL BE IMPLEMENTED TO REDUCE THE PROJECTS WATER QUALITY IMPACTS. THE PUMP DISCHARGE NEEDS TO BE FILTERED THROUGH SEDIMENT CONTROL DEVICES SUCH AS "DIRTBAG" OR SEDIMENT CONTROL STRUCTURES BEFORE IT CAN ENTER FISH HABITATS AT ANY POINT.
6. CONTRACTOR SHALL KEEP CLEAN AND DISPOSE OF ALL EARTHEN MATERIAL TRACKED ONTO DELTA DRIVE. THIS SHALL INCLUDE SWEEPING WITH POWER BROOM, VACUUMING AND WATERING ON A DAILY BASIS DURING HAULING ACTIVITY OR MORE FREQUENTLY AS DIRECTED BY THE ENGINEER.

P:\2020\20098JN-Bicknell_Delta\C\C600\cns\20098JN.dwg PLOT: December 03, 2020 at: 4:00pm Micki.Minsch

DESIGN MSM
DRAWN MSM
CHECK JMP
APPROVED JMP
FILE:

No.	DATE	REVISION	BY	APRVD.

DELTA DRIVE SUBDIVISION

JUNEAU, AK

BICKNELL INC. QUALITY CONSTRUCTION

STATE OF ALASKA 49TH Joseph M. Pusich CE 8152 REGISTERED PROFESSIONAL ENGINEER 12/03/20

PDC ENGINEERS
PLAN • DESIGN • CONSTRUCT
A BESPEC COMPANY
1000 Vanderbilt Court, Suite 3, Juneau, AK 99801
907.780.6060 | AECC605

EROSION & SEDIMENT CONTROL DETAILS

DATE: Dec 03, 2020
PDC No. 20098JN

SHEET
C301

PDC ENGINEERS

PLAN DESIGN CONSTRUCT

TECHNICAL MEMORANDUM

Client #	Bicknell Inc.	**Date**	10/2/2020
PDC #	20098JN	**Prepared by**	Sean Kelly, EIT
Project Name	Delta Drive Subdivision	**Reviewed by**	Mark Pusich, PE
Subject	Delta Drive Subdivision – Water Main Branch Sizing Memo		

Topic	Discussion
Introduction	Bicknell Inc. is the owner of Delta Drive subdivision and is proposing the replacement of a water main servicing the subdivisions lots. The subdivision includes 15 lots, 14 of which will have single family structures installed on the lots. The proposed water main installation will involve connecting a water submain off of the new 8" HDPE water line.
Existing Conditions	The existing subdivision includes 10 modular homes on concrete foundations with buildings previously removed. The inner island of the subdivision has four lots that have been recently cleared. The existing homes were served with ¾" water lines from the 2" main.
Peak Design Flow	The Delta Drive Subdivision is not a new development and is residential, so the flow design is straight forward. Testing data from the CBJ fire hydrant located at the cul-de-sac entrance of the subdivision was provided by the CBJ Water Department. Fixture count and pipe sizes were determined with the 2012 Uniform Plumbing Code, IAPMO/ANSI UPC1-2012.
Assumptions	For the design of the water main servicing the Delta Drive Subdivision several assumptions were made. The following are the assumptions made for this design: • Each home has two bathrooms which include shower with tub, sink and toilet. • Each home has a washing machine. • Each home has one hose bib. • Each home has a kitchen sink.
Fixture Count & Pipe Sizing	From the 2012 Uniform Plumbing Code, the following fixture counts (FC) were obtained from table 610.3 (attached) for private units:

Topic	Discussion
	• Lavatory (x2) – 2.0 FC • Water Closet, 1.6 GPF Gravity Tank (x2) – 5.0 FC • Bathtub or Combination Bath/Shower (x2) – 8.0 FC • Clothes Washer – 4.0 FC • Kitchen, domestic with or without dishwasher – 1.5 FC • Hose Bibb – 2.5 These fixtures bring the total fixture count per residential unit to 23 FC. The available static pressure is 64 psi, provided by CBJ, at Delta Drive fire hydrant. The longest line necessary from the tee off of the 8" line is 250'. Due to the configuration of the water main having two branches off of the 8" water main, the total fixture count is determined with seven units instead of the total 14. Total fixture count (TFC) for seven units is as follows, $$TFC = \left(\frac{23\ FC}{UNIT}\right) * 7\ UNITS = 161\ FC$$
Design Recommendation	Using Table 610.4 from the 2012 Uniform Plumbing Code (attached), the minimum pipe size for the water branches is two-inch pipe. It is recommended that two-inch pipe be used for the water main servicing the Delta Drive Subdivision.

TABLE 610.3
WATER SUPPLY FIXTURE UNITS (WSFU) AND MINIMUM FIXTURE BRANCH PIPE SIZES[3]

APPLIANCES, APPURTENANCES OR FIXTURES[2]	MINIMUM FIXTURE BRANCH PIPE SIZE[1,4] (Inches)	PRIVATE	PUBLIC	ASSEMBLY[6]
Bathtub or Combination Bath/Shower (fill)	½	4.0	4.0	—
¾ inch Bathtub Fill Valve	¾	10.0	10.0	—
Bidet	½	1.0	—	—
Clothes Washer	½	4.0	4.0	—
Dental Unit, cuspidor	½	—	1.0	—
Dishwasher, domestic	½	1.5	1.5	—
Drinking Fountain or Water Cooler	½	0.5	0.5	0.75
Hose Bibb	½	2.5	2.5	—
Hose Bibb, each additional[8]	½	1.0	1.0	—
Lavatory	½	1.0	1.0	1.0
Lawn Sprinkler, each head[5]	—	1.0	1.0	—
Mobile Home, each (minimum)	—	12.0	—	—
Sinks	—	—	—	—
Bar	½	1.0	2.0	—
Clinic Faucet	½	—	3.0	—
Clinic Flushometer Valve with or without faucet	1	—	8.0	—
Kitchen, domestic with or without dishwasher	½	1.5	1.5	—
Laundry	½	1.5	1.5	—
Service or Mop Basin	½	1.5	3.0	—
Washup, each set of faucets	½	—	2.0	—
Shower, per head	½	2.0	2.0	—
Urinal, 1.0 GPF Flushometer Valve	¾	See Footnote[7]		—
Urinal, greater than 1.0 GPF Flushometer Valve	¾	See Footnote[7]		—
Urinal, flush tank	½	2.0	2.0	3.0
Wash Fountain, circular spray	¾	—	4.0	—
Water Closet, 1.6 GPF Gravity Tank	½	2.5	2.5	3.5
Water Closet, 1.6 GPF Flushometer Tank	½	2.5	2.5	3.5
Water Closet, 1.6 GPF Flushometer Valve	1	See Footnote[7]		—
Water Closet, greater than 1.6 GPF Gravity Tank	½	3.0	5.5	7.0
Water Closet, greater than 1.6 GPF Flushometer Valve	1	See Footnote[7]		—

For SI units: 1 inch = 25 mm

Notes:

1 Size of the cold branch pipe, or both the hot and cold branch pipes.

2 Appliances, appurtenances, or fixtures not referenced in this table shall be permitted to be sized by reference to fixtures having a similar flow rate and frequency of use.

3 The listed fixture unit values represent their load on the cold water building supply. The separate cold water and hot water fixture unit value for fixtures having both hot and cold water connections shall be permitted to be each taken as three-quarter of the listed total value of the fixture.

4 The listed minimum supply branch pipe sizes for individual fixtures are the nominal (I.D.) pipe size.

5 For fixtures or supply connections likely to impose continuous flow demands, determine the required flow in gallons per minute (gpm) (L/s), and add it separately to the demand in gpm (L/s) for the distribution system or portions thereof.

6 Assembly [Public Use (See Table 422.1)].

7 Where sizing flushometer systems, see Section 610.10.

8 Reduced fixture unit loading for additional hose bibbs is to be used where sizing total building demand and for pipe sizing where more than one hose bibb is supplied by a segment of water distribution pipe. The fixture branch to each hose bibb shall be sized on the basis of 2.5 fixture units.

TABLE 610.4
FIXTURE UNIT TABLE FOR DETERMINING WATER PIPE AND METER SIZES

METER AND STREET SERVICE (Inches)	BUILDING SUPPLY AND BRANCHES (Inches)	MAXIMUM ALLOWABLE LENGTH (feet)														
		40	60	80	100	150	200	250	300	400	500	600	700	800	900	1000
PRESSURE RANGE – 30 to 45 psi[1]																
¾	½[2]	6	5	4	3	2	1	1	1	0	0	0	0	0	0	0
¾	¾	16	16	14	12	9	6	5	5	4	4	3	2	2	2	1
¾	1	29	25	23	21	17	15	13	12	10	8	6	6	6	6	6
1	1	36	31	27	25	20	17	15	13	12	10	8	6	6	6	6
¾	1¼	36	33	31	28	24	23	21	19	17	16	13	12	12	11	11
1	1¼	54	47	42	38	32	28	25	23	19	17	14	12	12	11	11
1½	1¼	78	68	57	48	38	32	28	25	21	18	15	12	12	11	11
1	1½	85	84	79	65	56	48	43	38	32	28	26	22	21	20	20
1½	1½	150	124	105	91	70	57	49	45	36	31	26	23	21	20	20
2	1½	151	129	129	110	80	64	53	46	38	32	27	23	21	20	20
1	2	85	85	85	85	85	85	82	80	66	61	57	52	49	46	43
1½	2	220	205	190	176	155	138	127	120	104	85	70	61	57	54	51
2	2	370	327	292	265	217	185	164	147	124	96	70	61	57	54	51
2	2½	445	418	390	370	330	300	280	265	240	220	198	175	158	143	133
PRESSURE RANGE – 46 to 60 psi[1]																
¾	½[2]	7	7	6	5	4	3	2	2	1	1	1	0	0	0	0
¾	¾	20	20	19	17	14	11	9	8	6	5	4	4	3	3	3
¾	1	39	39	36	33	28	23	21	19	17	14	12	10	9	8	8
1	1	39	39	39	36	30	25	23	20	18	15	12	10	9	8	8
¾	1¼	39	39	39	39	39	39	34	32	27	25	22	19	19	17	16
1	1¼	78	78	76	67	52	44	39	36	30	27	24	20	19	17	16
1½	1¼	78	78	78	78	66	52	44	39	33	29	24	20	19	17	16
1	1½	85	85	85	85	85	85	80	67	55	49	41	37	34	32	30
1½	1½	151	151	151	151	128	105	90	78	62	52	42	38	35	32	30
2	1½	151	151	151	151	150	117	98	84	67	55	42	38	35	32	30
1	2	85	85	85	85	85	85	85	85	85	85	85	85	85	83	80
1½	2	370	370	340	318	272	240	220	198	170	150	135	123	110	102	94
2	2	370	370	370	370	368	318	280	250	205	165	142	123	110	102	94
2	2½	654	640	610	580	535	500	470	440	400	365	335	315	285	267	250
PRESSURE RANGE – Over 60 psi[1]																
¾	½[2]	7	7	7	6	5	4	3	3	2	1	1	1	1	1	0
¾	¾	20	20	20	20	17	13	11	10	8	7	6	6	5	4	4
¾	1	39	39	39	39	35	30	27	24	21	17	14	13	12	12	11
1	1	39	39	39	39	38	32	29	26	22	18	14	13	12	12	11
¾	1¼	39	39	39	39	39	39	39	39	34	28	26	25	23	22	21
1	1¼	78	78	78	78	74	62	53	47	39	31	26	25	23	22	21
1½	1¼	78	78	78	78	78	74	65	54	43	34	26	25	23	22	21
1	1½	85	85	85	85	85	85	85	85	81	64	51	48	46	43	40
1½	1½	151	151	151	151	151	151	130	113	88	73	51	51	46	43	40
2	1½	151	151	151	151	151	151	142	122	98	82	64	51	46	43	40
1	2	85	85	85	85	85	85	85	85	85	85	85	85	85	85	85
1½	2	370	370	370	370	360	335	305	282	244	212	187	172	153	141	129
2	2	370	370	370	370	370	370	370	340	288	245	204	172	153	141	129
2	2½	654	654	654	654	654	650	610	570	510	460	430	404	380	356	329

For SI units: 1 inch = 25 mm, 1 foot = 304.8 mm, 1 pound-force per square inch = 6.8947 kPa

Notes:

[1] Available static pressure after head loss.

[2] Building supply, not less than ¾ of an inch (20 mm) nominal size.

From: Loni VanKirk <Loni.VanKirk@juneau.org>
Sent: Monday, September 28, 2020 8:18 AM
To: Kevin Puustinen <KevinPuustinen@pdceng.com>
Subject: RE: Hydrant Test Data - Delta Drive

CAUTION: This email originated from outside of the organization. Exercise caution when viewing attachments, clicking links, or responding to requests.

ACROSS FROM 4045 DELTA DR.	MUELLER	WET	64	1110/48	8/13/2019

Kevin,

Here is the Data you requested.

Static PSI Flow/residual PSI

Loni Van Kirk
Distribution Senior Operator
CBJ Water Utility
907-723-4975

From: Kevin Puustinen <KevinPuustinen@pdceng.com>
Sent: Wednesday, September 23, 2020 10:06 AM
To: Loni VanKirk <Loni.VanKirk@juneau.org>
Subject: Hydrant Test Data - Delta Drive

EXTERNAL E-MAIL: BE CAUTIOUS WHEN OPENING FILES OR FOLLOWING LINKS

Hi Loni – Can you please send me your most recent test data for the hydrant in the cul-de-sac on Delta Drive?

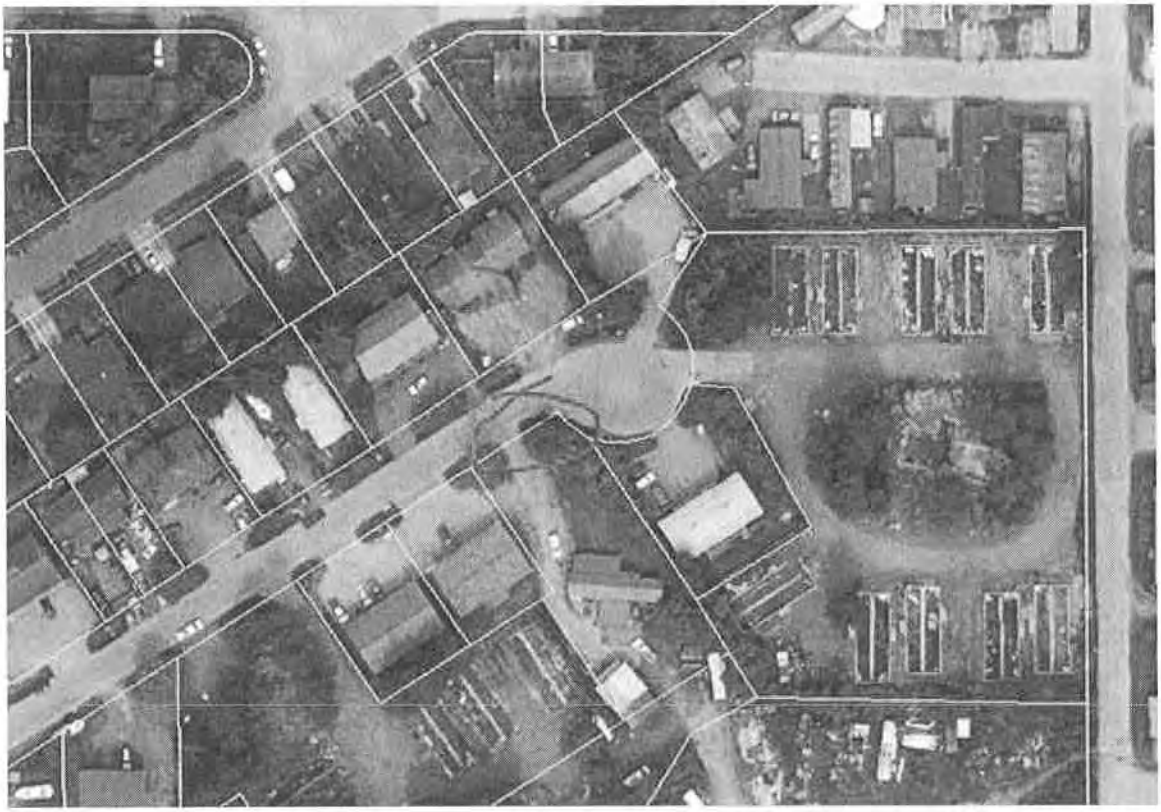

Thanks,

Kevin Puustinen, PE
Civil Engineer

PDC ENGINEERS
A RESPEC COMPANY

9109 Mendenhall Mall Rd. Ste 4, Juneau, Alaska 99801 | 907.780.6060
Facebook | LinkedIn | Twitter | www.pdceng.com

Transforming Challenges into Solutions

Anchorage | Fairbanks | Juneau | Palmer | Soldotna

Confidentiality Notice: This E-mail and any attachments is covered by the Electronic Communications Privacy Act, 18 U.S.C. & 2510-2524, is confidential and may be legally privileged. If you are not the intended recipient, you are hereby notified that any retention, dissemination, or copying of this communication is strictly prohibited. Please reply to the sender that you have received the message in error, and permanently delete the original and destroy any copy, including printed copies of this email and any attachments thereto.

DRAINAGE REPORT
FOR
DELTA DRIVE SUBDIVISION
JUNEAU, ALASKA

Prepared For:

Bicknell Development
2275 Brandy Lane, Suite 1
Juneau, AK 99801

Prepared By:

PDC Engineers
9109 Mendenhall Mall Road Suite 4
Juneau, AK 99801

Date: November 20, 2020
PDC Project No. 20098JN

1.0 PROJECT OVERVIEW

1.1 Project Description

Bicknell Inc., is proposing to redevelop an existing residential property. The project is located off the cul-de-sac at the end of Delta Drive. The property previously had 10 double wide mobile homes and a structure in the center of the property. The mobile homes and the center structure have been removed and the mobile home concrete foundations remain. The property has been divided into 15 lots. Lot 1 is the parent lot, lots 2 through 6 make up the northern lots. The center of the property has been divided into four lots to create lots 7 through 10. Lots 11 through 15 make up the southern lots.

1.2 Project Duration

The developer (Bicknell) will begin construction in the spring of 2021. The subdivision development is anticipated to occur over a period of approximately 3 months.

2.0 SOIL INFORMATION

Soil conditions present in the project area consists of a vegetated surface layer underlain by a soil matrix of sand, gravels and silt material. The ground water is located approximately 3 feet below the surface as confirmed by excavated test pits. The project area is fairly flat.

3.0 STORM WATER SYSTEM

Currently drainage leaves the site through a 12” CMP culvert located at the end of Delta Drive on the northeast side of the cul-de-sac.

The storm water system along Delta Drive has been proposed to be upgraded per CBJ Contract BE21-028 “Delta Drive Reconstruction.” Work is scheduled for spring/summer 2021. For the purpose of this report, the proposed culverts for Delta Drive Reconstruction were used for the analysis of the Delta Drive Subdivision project site.

Drainage from the proposed Delta Drive Subdivision project site will be discharged into the Delta Drive storm water system at three locations, the 12” CPP ditch culvert (Pipe P-1) on the northeast side of the Delta Drive cul-de-sac, the 12” CPP culvert (Pipe P-3) at the area drain on the southeast side of the cul-de-sac, and a 12” CPP ditch culvert (Pipe P-4) located on the southwestern side of the cul-de-sac where it meets the 10’ drainage easement.

A drainage swale along the northern perimeter of the proposed project area will be

graded at 1.0% from the east to the west to then discharge in to Pipe P-1 at the northeast side of the Delta Drive cul-de-sac. Drainage from the swale around lots 7 through 10 will drain into a Type III catch basin where it will then flow through a 12" CPP pipe (Pipe P-2) to a ditch where it will leave the site through Pipe P-1 at the northeast side of the Delta Drive cul-de-sac.

A drainage swale along the southern perimeter of the proposed project area will be graded at 1.0% from east to west to an underdrain that runs along a 10' drainage easement to Pipe P-4 at the southwestern side of the Delta Drive cul-de-sac.

All of the discharge from the site would then meet at a catch basin on Delta Drive where it will be discharge through an 18" CPP culvert (Pipe P-5) to continue through the storm system.

Storm drain structures and piping would follow CBJ Standard Specifications and Standard Drawings for the development.

3.0 SITE RUNOFF CALCULATION METHOD:

A total of four catchment areas were analyzed representing the existing and proposed drainage conveyance systems relevant to the project. The catchment areas include: The existing 12" CPP culvert (Pipe P-1) that is located at the northeastern side of the Delta Drive cul-de-sac, the proposed 12" CPP culvert (Pipe P-2) that is located on the project site near the entrance to the subdivision, the existing 12" CPP culvert (Pipe P-3) that is located on the southeastern edge of the cul-de-sac, and the existing 12" CPP culvert (Pipe P-4) at the southwestern end of the cul-de-sac.

The catchment areas were determined using the proposed design model. A delineation of the areas can be found in Appendix A.

To calculate the site runoff we have elected to use the Rational Method. The Rational Method is most appropriate for evaluating drainage basins less than 10 acres. Appendix D of the "2010 CBJ Manual of Storm Water Best Management Practices" was utilized as a guide. The calculations and supporting documentation can be found in Appendix B, C, D & E of this report.

3.1 Anticipated Site Runoff (Q):

Using the Rational Method, the amount of stormwater runoff during the 25-year storm event per catchment area was determined. See Table 1.1 for results, the calculations can be found in Appendix B.

Table 1.1 Anticipated Site Runoff (Q):	
Catchment Area	**Q (cfs)**
Pipe P-1	1.03
Pipe P-2	0.94
Pipe P-3	0.42
Pipe P-4	0.74

3.2 Conveyance/Discharge Structure Capacities:

The capacity of the existing and proposed drainage systems was calculated using the Manning's Equation to determine if proposed 25-year storm even flows could be conveyed. See Table 1.2 below for results, calculations can be found in Appendix B.

Table 1.2 Conveyance/Discharge Structure Capacities:	
Catchment Area	**Q (cfs)**
Pipe P-1	2.57
Pipe P-2	2.34
Pipe P-3	2.59
Pipe P-4	14.51
Pipe P-5	6.16

Summary

Table 1.3 below compares anticipated 25-year runoff in the proposed and existing conveyance systems to their available hydraulic capacity.

Table 1.3 Comparison			
Drainage Basin	**Anticipated Runoff Q (cfs)**	**Capacity Check**	**Available Capacity Q (cfs)**
Pipe P-1	1.12	<	2.57
Pipe P-2	0.94	<	2.34
Pipe P-3	0.42	<	2.59
Pipe P-4	0.74	<	14.51
Pipe P-5	3.13	<	6.16

In summary our analysis shows that there is enough capacity in the existing and proposed drainage structures to handle flows from the altered drainage patterns as a result of the proposed Delta Drive Subdivision improvements.

11/20/2020

J. Mark Pusich, P.E.
Principal Civil Engineer
PDC Engineers

Appendices:

A – Catchment Areas
B – Rational Method
C – Runoff Coefficient
D – Time of Concentration
E – Rainfall Intensity
F – Existing & Proposed

Appendix A
Catchment Areas

DELTA DRIVE SUBDIVISION CONSTRUCTION IMPROVEMENT PLAN DRAINAGE MAP

JUNEAU, ALASKA

PREPARED FOR BICKNELL, INC.

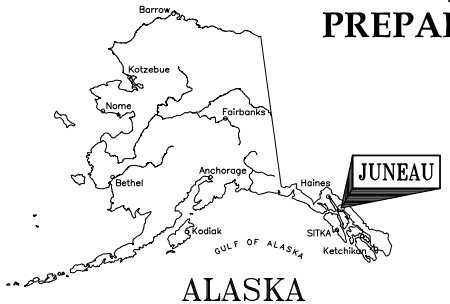

ALASKA

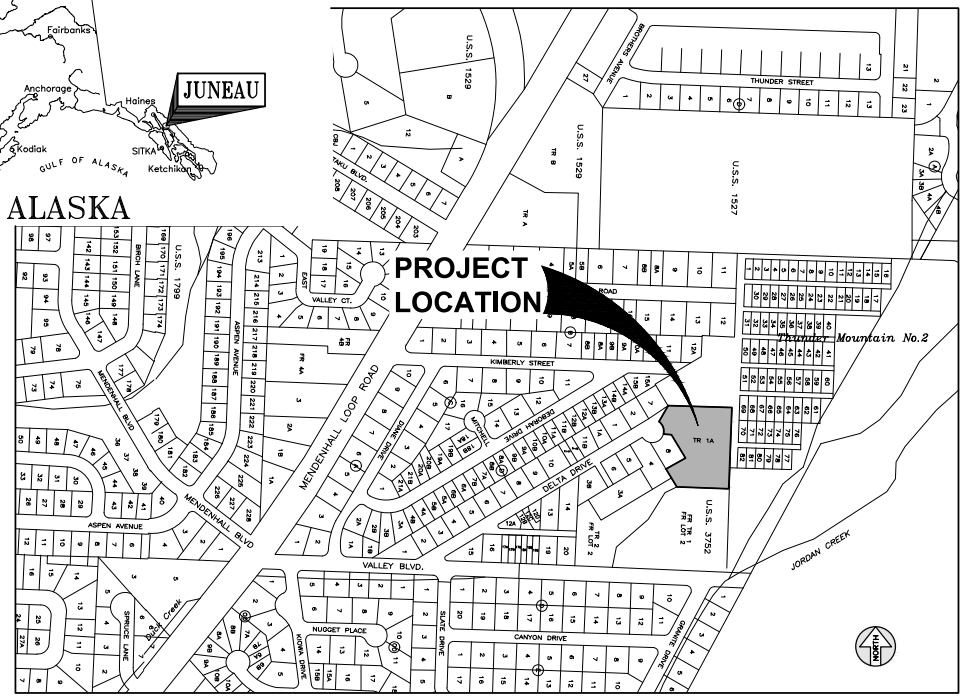

PROJECT LOCATION MAP

500' 0 250' 500' 1000'
GRAPHIC SCALE

SHEET INDEX

SHEET No.	DESCRIPTION
1	COVER SHEET
2	P-1: EXISTING 12" CPP CULVERT
3	P-2: PROPOSED 12" CPP CULVERT
4	P-3: EXISTING 12" CPP CULVERT
5	P-4: EXISTING 12" CPP CULVERT

P:\2020\2009UNI-Bicknell_Delta\C\Drainage Map.dwg PLOT: November 20, 2020 in: 10.4dwn Misc.Attmnt

DESIGN XXX
DRAWN XXX
CHECK JMP
APPROVED JMP
FILE:

No.	DATE	REVISION	BY	APRVD.

DELTA DRIVE SUBDIVISION

JUNEAU, AK

PDC ENGINEERS
PLAN • DESIGN • CONSTRUCT
A 重要企业集 COMPANY
9109 Mendenhall Mall Rd. Ste. 4, Juneau, AK 99801
907.780.6060 | AECC605

COVER SHEET

DATE: Nov 20, 20
PDC No. 2009
SHEET 1

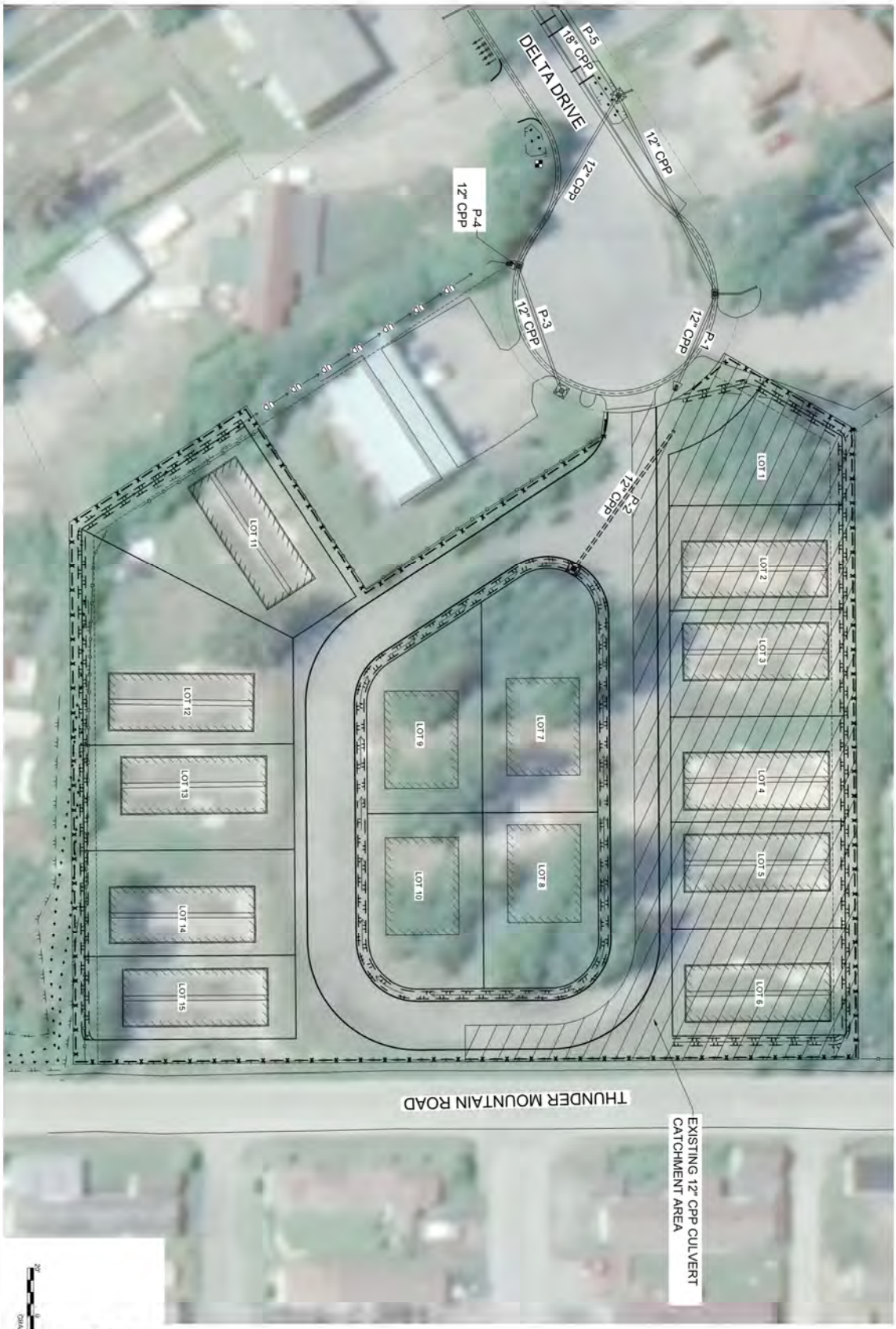

DESIGN XXX
DRAWN XXX
CHECK JMP
APPROVED JMP
FILE

No	DATE	REVISION	BY	APRV'D

DELTA DRIVE
SUBDIVISION
JUNEAU, AK

PDC ENGINEERS
PLAN • DESIGN • CONSTRUCT
INTEGRITY STRATEGY
9001 Mendenhall Mall Rd, Suite A, Juneau, AK 99801
907.780.6060 | AECOM

P-1: EXISTING 12" CPP
CULVERT CATCHMENT AREA

DATE Nov 20, 2020
PDC No 2000-0000
SHEET 2

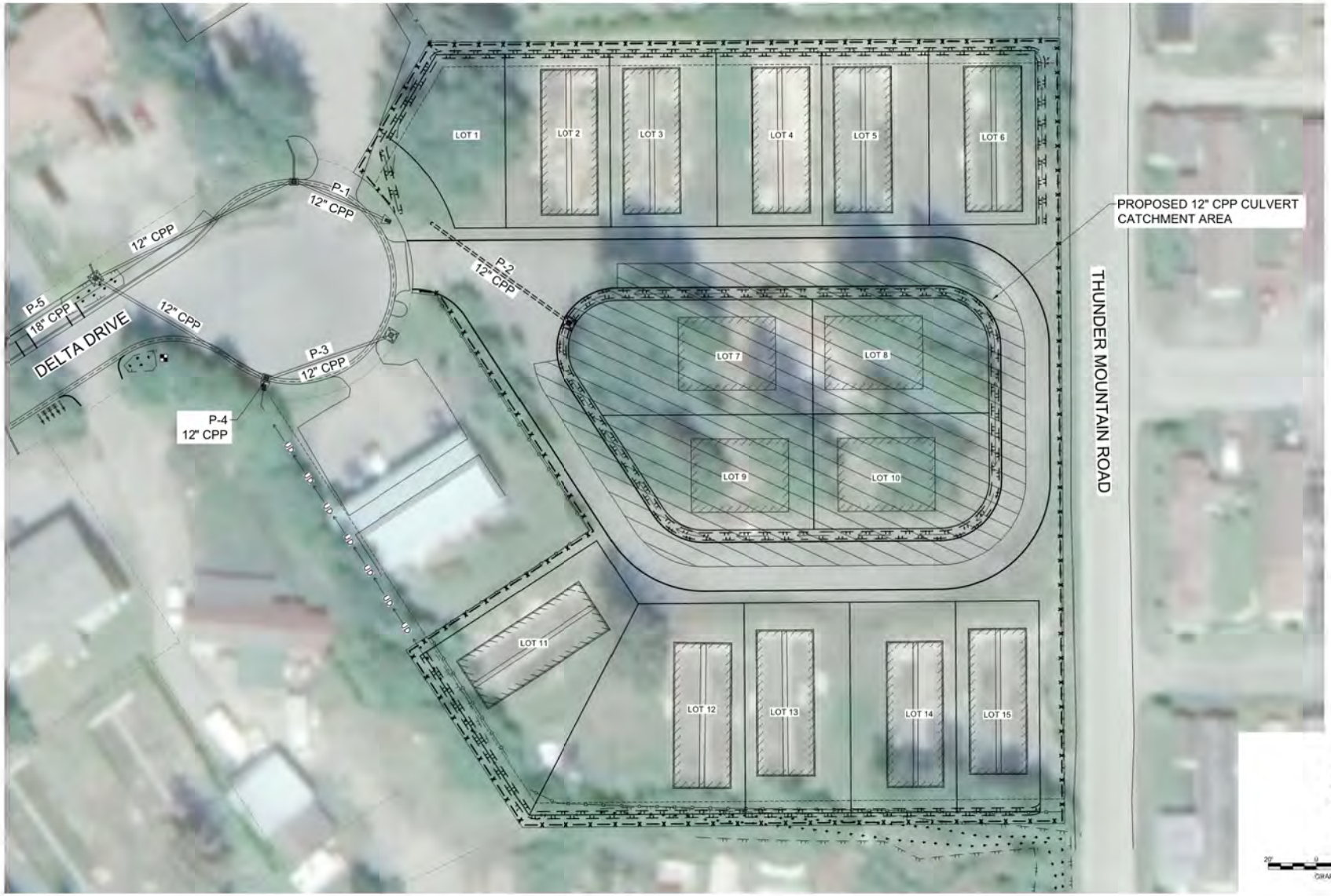

DESIGN XXX
DRAWN XXX
CHECK JMP
APPROVED JMP
FILE

No.	DATE	REVISION	BY	APRVD.

DELTA DRIVE
SUBDIVISION

JUNEAU, AK

PDC ENGINEERS
PLAN • DESIGN • CONSTRUCT
A BESPEC COMPANY
9109 Mendenhall Mall Rd. Ste. 4, Juneau, AK 99801
907.780.6060 | AECC605

P-2: PROPOSED 12" CPP
CULVERT CATCHMENT AREA

DATE Nov 20, 20
PDC No 2009
SHEET 3

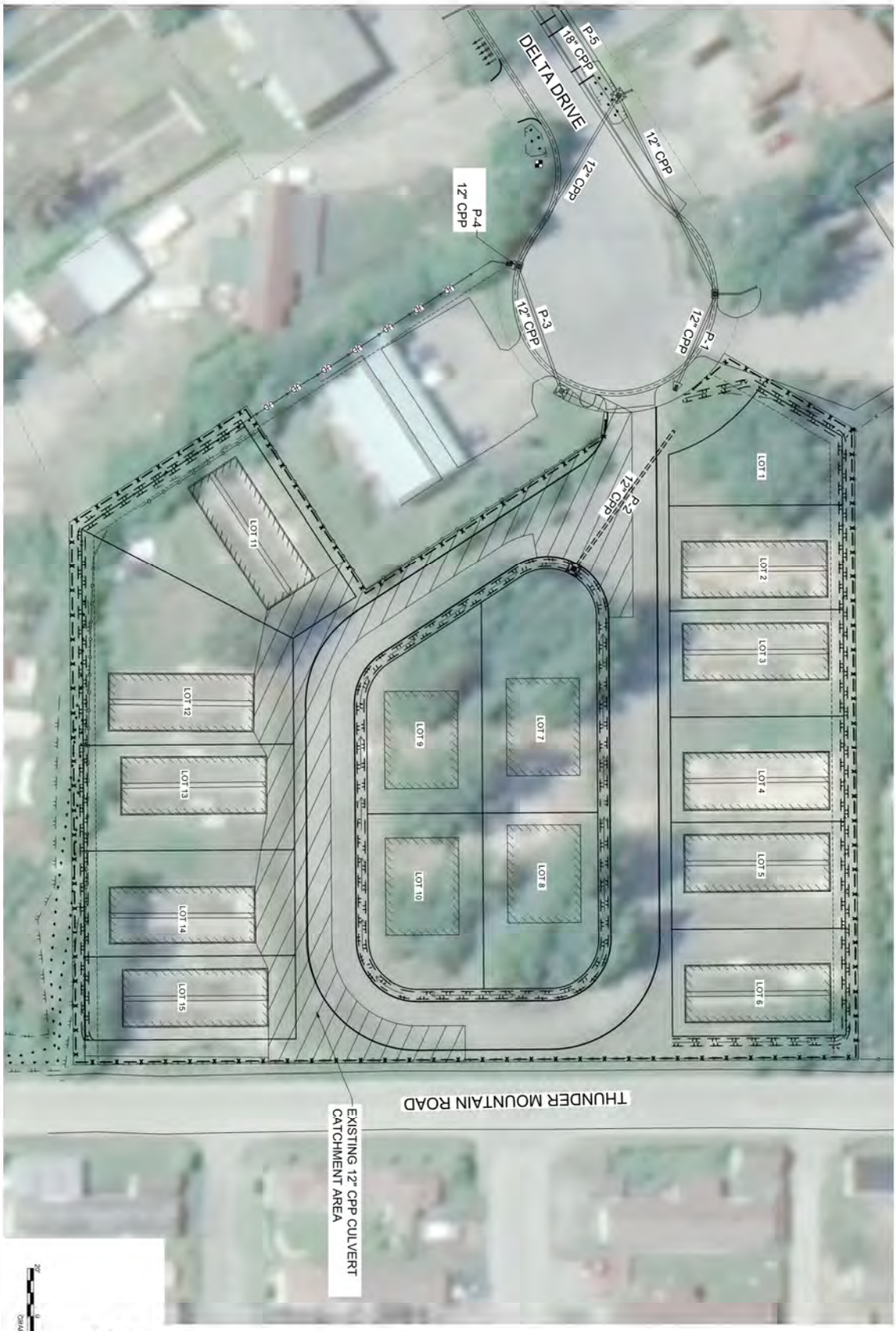

DESIGN XXX
DRAWN XXX
CHECK JMP
APPROVED JMP
FILE

No	DATE	REVISION	BY	APPRO

DELTA DRIVE
SUBDIVISION
JUNEAU, AK

PDC ENGINEERS
PLAN • DESIGN • CONSTRUCT
9101 Mendenhall Mall Rd, Suite A, Juneau, AK 99801
907.780.6060 | AECC003

P-3: EXISTING 12" CPP
CULVERT CATCHMENT AREA

DATE: Nov 20, 2020
PDC No. 2000-0

SHEET 4

DESIGN XXX
DRAWN XXX
CHECK JMP
APPROVED JMP
FILE

No.	DATE	REVISION	BY	APPRO

DELTA DRIVE SUBDIVISION
JUNEAU, AK

PDC ENGINEERS
PLAN • DESIGN • CONSTRUCT
9101 Mendenhall Mall Rd, Suite A
Juneau, AK 99801
907.780.6060 | AECC603

P-4: EXISTING 12" CPP CULVERT CATCHMENT AREA

DATE: Nov 20, 2020
PDC No. 2020-0

SHEET 5

Appendix B
Rational Method

Rational Method Site Runoff Pipe P-1: Existing 12" CPP		
Project:	Delta Drive Subdivision	PDC ENGINEERS PLAN • DESIGN • CONSTRUCT A RESPEC COMPANY 9109 Mendenhall Mall Rd, Ste. 4, Juneau, AK 99801 907.780.6060 | AECC605
Owner:	Bicknell Inc.	
Date:	11/19/2020	
Prepared By:	M. Minsch	
Checked By:	M. Pusich	

$$\boldsymbol{Q = CIA}$$

Q= peak flow in cubic feet per second (cfs)
C = runoff coefficient
I = rainfall intensity (inches per hour)
A = catchment area (acres)

$$\boldsymbol{C_c = (C_1A_1 + C_2A_2)/A_t}$$

$C_c = composite\ runoff\ coefficient$
$C_{1,2} = runoff\ coefficient\ for\ each\ area\ land\ cover\ type$
$A_t = total\ area\ (acres)$
$A_{1,2} = areas\ of\ land\ cover\ (acres)$
$C_c = 0.84, see\ Appendix\ C\ for\ calculation$

$$\boldsymbol{T_c = T_1 + T_2 + \cdots + T_n}$$

$T_c = time\ of\ concentration\ (min)$
$T_{1,2} = travel\ time\ across\ separate\ flow\ path\ segments$ (min)
$T_c = 13.10\ min, see\ Appendix\ D\ for\ calculaton$

$$\boldsymbol{T_t = L/60V}$$

$T_t = travel\ time\ (min)$
$L = the\ distance\ of\ flow\ across\ a\ given\ segment\ (feet)$
$V = k_r\sqrt{S_0} = average\ velocity\ \left(\frac{feet}{\sec}\right) across\ land\ cover$
$k_r = time\ of\ concentration\ velocity\ factor\ (CBJ\ Manual\ of\ Storm\ Water\ BMP\ 2010, Table\ D-5, PG.D-10)$
$S_0 = slope\ of\ flow\ path\ (\frac{feet}{feet})$

Per CBJ Manual of Storm Water BMP 2010, Table 5-1, page 5-1, design event frequencies are specified. For driveway culvert, a 25-year storm event is the required design return period. We will base our analysis on a 25-year design return period for all drainage structures and catchment areas. Per CBJ Manual of Storm Water BMP 2010, page D-9, basins with a time and concentration 10 minutes or less shall use the 10 minute intensity. Basins with a time of concentration greater than 10 minutes and less than 30 minutes shall interpolate between the 10 and 30 minute values. Rainfall intensity for the site was sourced from the NOAA Atlas 14, Point Precipitation Frequency Estimates, see Appendix E, and is summarized as follows:

	Design Return Period
Tc 13.10 (min)	25-year
Interpolated Intensity (in/hr)=	**2.03**

Pipe P-1 is an existing 12" CPP culvert on the northeast side of the Delta Drive cul-de-sac that drains into the Delta Drive storm system at the location where the new subdivision access will tie into the shoulder of the cul-de-sac. The area that is proposed to contribute runoff to this culvert was delineated in AutoCAD.

A=26270 sqft/43,560 = 0.60 acres

	C_c	I	A		
Q (cfs)=	0.84	2.03	0.60	=	**1.03**

Rational Method Site Runoff Pipe P-2: Proposed 12" CPP		
Project:	Delta Drive Subdivision	PDC ENGINEERS PLAN • DESIGN • CONSTRUCT A RESPEC COMPANY 9109 Mendenhall Mall Rd. Ste. 4, Juneau, AK 99801 907.780.6060 | AECC605
Owner:	Bicknell Inc.	
Date:	11/19/2020	
Prepared By:	M. Minsch	
Checked By:	M. Pusich	

$$\boldsymbol{Q = CIA}$$

Q= peak flow in cubic feet per second (cfs)
C = runoff coefficient
I = rainfall intensity (inches per hour)
A = catchment area (acres)

$$\boldsymbol{C_c = (C_1A_1 + C_2A_2)/A_t}$$

$C_c = composite\ runoff\ coefficient$
$C_{1,2} = runoff\ coefficient\ for\ each\ area\ land\ cover\ type$
$A_t = total\ area\ (acres)$
$A_{1,2} = areas\ of\ land\ cover\ (acres)$
$C_c = 0.84, \quad see\ Appendix\ C\ for\ calculation$

$$\boldsymbol{T_c = T_1 + T_2 + \cdots + T_n}$$

$T_c = time\ of\ concentration\ (min)$
$T_{1,2} = travel\ time\ across\ separate\ flow\ path\ segments$ (min)
$T_c = 11.27\ min, see\ Appendix\ D\ for\ calculaton$

$$\boldsymbol{T_t = L/60V}$$

$T_t = travel\ time\ (min)$
$L = the\ distance\ of\ flow\ across\ a\ given\ segment\ (feet)$
$V = k_r\sqrt{S_0} = average\ velocity\ \left(\frac{feet}{\sec}\right) across\ land\ cover$
$k_r = time\ of\ concentration\ velocity\ factor\ (CBJ\ Manual\ of\ Storm\ Water\ BMP\ 2010, Table\ D-5, PG.D-10)$
$S_0 = slope\ of\ flow\ path\ (\frac{feet}{feet})$

Per CBJ Manual of Storm Water BMP 2010, Table 5-1, page 5-1, design event frequencies are specified. For driveway culvert, a 25-year storm event is the required design return period. We will base our analysis on a 25-year design return period for all drainage structures and catchment areas. Per CBJ Manual of Storm Water BMP 2010, page D-9, basins with a time and concentration 10 minutes or less shall use the 10 minute intensity. Basins with a time of concentration greater than 10 minutes and less than 30 minutes shall interpolate between the 10 and 30 minute values. Rainfall intensity for the site was sourced from the NOAA Atlas 14, Point Precipitation Frequency Estimates, see Appendix E, and is summarized as follows:

	Design Return Period
Tc 11.27 (min)	25-year
Interpolated Intensity (in/hr)=	**2.22**

P-2 is a proposed 12" CPP pipe is being installed to maintain the runoff from part of the subdivision access road and from proposed lots 7 through 10. Runoff will be carried down to a ditch where it will then flow into pipe P-1 and discharge into the Delta Drive storm system. The area that is proposed to contribute runoff to this culvert was delineated in AutoCAD.

A=21,736 sqft/43,560 = 0.50 acres

	C_c	I	A		
Q (cfs)=	0.84	2.22	0.50	=	**0.94**

Rational Method Site Runoff Pipe P-3: Existing 12" CPP		
Project:	Delta Drive Subdivision	PDC ENGINEERS PLAN • DESIGN • CONSTRUCT A RESPEC COMPANY 9109 Mendenhall Mall Rd. Ste. 4, Juneau, AK 99801 907.780.6060 | AECC605
Owner:	Bicknell Inc.	
Date:	11/19/2020	
Prepared By:	M. Minsch	
Checked By:	M. Pusich	

$$\boldsymbol{Q = CIA}$$

Q= peak flow in cubic feet per second (cfs)
C = runoff coefficient
I = rainfall intensity (inches per hour)
A = catchment area (acres)

$$\boldsymbol{C_c = (C_1A_1 + C_2A_2)/A_t}$$

$C_c = composite\ runoff\ coefficient$
$C_{1,2} = runoff\ coefficient\ for\ each\ area\ land\ cover\ type$
$A_t = total\ area\ (acres)$
$A_{1,2} = areas\ of\ land\ cover\ (acres)$
$C_c = 0.85, see\ Appendix\ C\ for\ calculation$

$$\boldsymbol{T_c = T_1 + T_2 + \cdots + T_n}$$

$T_c = time\ of\ concentration\ (min)$
$T_{1,2} = travel\ time\ across\ separate\ flow\ path\ segments$ (min)
$T_c = 12.93\ min, see\ Appendix\ D\ for\ calculaton$

$$\boldsymbol{T_t = L/60V}$$

$T_t = travel\ time\ (min)$
$L = the\ distance\ of\ flow\ across\ a\ given\ segment\ (feet)$
$V = k_r\sqrt{S_0} = average\ velocity\ \left(\frac{feet}{\text{sec}}\right) across\ land\ cover$
$k_r = time\ of\ concentration\ velocity\ factor\ (CBJ\ Manual\ of\ Storm\ Water\ BMP\ 2010, Table\ D-5, PG.D-10)$
$S_0 = slope\ of\ flow\ path\ (\frac{feet}{feet})$

Per CBJ Manual of Storm Water BMP 2010, Table 5-1, page 5-1, design event frequencies are specified. For driveway culvert, a 25-year storm event is the required design return period. We will base our analysis on a 25-year design return period for all drainage structures and catchment areas. Per CBJ Manual of Storm Water BMP 2010, page D-9, basins with a time and concentration 10 minutes or less shall use the 10 minute intensity. Basins with a time of concentration greater than 10 minutes and less than 30 minutes shall interpolate between the 10 and 30 minute values. Rainfall intensity for the site was sourced from the NOAA Atlas 14, Point Precipitation Frequency Estimates, see Appendix E, and is summarized as follows:

	Design Return Period
Tc 12.93 (min)	25-year
Interpolated Intensity (in/hr)=	**2.05**

Pipe P-3 is an existing 12" CPP culvert on the southeast side of the Delta Drive cul-de-sac that drains into the Delta Drive ditch system that is near the location where the new subdivision access will tie into the shoulder of the cul-de-sac. Runoff will flow into the area drain and catch basin before flowing through the culvert. The area that is proposed to contribute runoff to this culvert was delineated in AutoCAD.

A=10,626 sqft/43,560 = 0.24 acres

	C_c	I	A		
Q (cfs)=	0.85	2.05	0.24	=	**0.42**

Rational Method Site Runoff Pipe P-4: Existing 12" CPP		
Project:	Delta Drive Subdivision	PDC ENGINEERS PLAN · DESIGN · CONSTRUCT A RESPEC COMPANY 9109 Mendenhall Mall Rd, Ste. 4, Juneau, AK 99801 907.780.6060 | AECC605
Owner:	Bicknell Inc.	
Date:	11/19/2020	
Prepared By:	M. Minsch	
Checked By:	M. Pusich	

$$\boldsymbol{Q = CIA}$$

Q= peak flow in cubic feet per second (cfs)
C = runoff coefficient
I = rainfall intensity (inches per hour)
A = catchment area (acres)

$$\boldsymbol{C_c = (C_1A_1 + C_2A_2)/A_t}$$

$C_c = composite\ runoff\ coefficient$
$C_{1,2} = runoff\ coefficient\ for\ each\ area\ land\ cover\ type$
$A_t = total\ area\ (acres)$
$A_{1,2} = areas\ of\ land\ cover\ (acres)$
$C_c = 0.83, see\ Appendix\ C\ for\ calculation$

$$\boldsymbol{T_c = T_1 + T_2 + \cdots + T_n}$$

$T_c = time\ of\ concentration\ (min)$
$T_{1,2} = travel\ time\ across\ separate\ flow\ path\ segments$ (min)
$T_c = 16.60\ min, see\ Appendix\ D\ for\ calculaton$

$$\boldsymbol{T_t = L/60V}$$

$T_t = travel\ time\ (min)$
$L = the\ distance\ of\ flow\ across\ a\ given\ segment\ (feet)$
$V = k_r\sqrt{S_0} = average\ velocity\ \left(\frac{feet}{\sec}\right) across\ land\ cover$
$k_r = time\ of\ concentration\ velocity\ factor\ (CBJ\ Manual\ of\ Storm\ Water\ BMP\ 2010, Table\ D-5, PG.D-10)$
$S_0 = slope\ of\ flow\ path\ (\frac{feet}{feet})$

Per CBJ Manual of Storm Water BMP 2010, Table 5-1, page 5-1, design event frequencies are specified. For driveway culvert, a 25-year storm event is the required design return period. We will base our analysis on a 25-year design return period for all drainage structures and catchment areas. Per CBJ Manual of Storm Water BMP 2010, page D-9, basins with a time and concentration 10 minutes or less shall use the 10 minute intensity. Basins with a time of concentration greater than 10 minutes and less than 30 minutes shall interpolate between the 10 and 30 minute values. Rainfall intensity for the site was sourced from the NOAA Atlas 14, Point Precipitation Frequency Estimates, see Appendix E, and is summarized as follows:

	Design Return Period
Tc 16.60 (min)	25-year
Interpolated Intensity (in/hr)=	**1.77**

There is an existing 12" CMP culvert that drains into the existing Delta Drive drainage system at the location where the new subdivision access will tie into the end of the Delta Drive cul-de-sac. The 12" CMP culvert is proposed to be replaced with a 12" CPP culvert along with the rest of the Delta Drive storm system under CBJ Contract BE21-028 "Delta Drive Reconstruction." Work is scheduled for spring/summer 2021. The 12" CPP culvert is being installed to maintain the existing flow around the Delta Drive cul-de-sac.

A=21,786 sqft/43,560 = 0.50 acres

	C_c	I	A		
Q (cfs)=	0.83	1.77	0.50	=	**0.74**

Appendix C
Runoff Coefficient

Runoff Coefficient Calculations	
Project:	Delta Drive Subdivision
Owner:	Bicknell Inc.
Date:	11/19/2020
Prepared By:	M. Minsch
Checked By:	M. Pusich

Pipe P-1: Existing 12" CPP Culvert	
Total Basin Area (SQFT)=	26270
Total Basin Area (ACRE)=	0.60

Surface Type	Location	Area (SQFT)	Total (SQFT)	Total (Acre)	% Overall Basin	Surface Runoff Coefficient	Runoff Coefficient for Each Area
Pavement	Road	3143					
			3143	0.07215335	11.96%	0.9	0.1
Building Roofs	Mobile homes	7084					
			7084	0.16262626	26.97%	0.9	0.1
Gravel Area	Everywhere else	16043					
			16043	0.3682966	61.07%	0.8	0.3
		Total=	26270	0.60	100.00%		0.5
					Composite Runoff Coefficient		**0.84**

Pipe P-2: Proposed 12" CPP	
Total Basin Area (SQFT)=	21736
Total Basin Area (ACRE)=	0.5

Surface Type	Location	Area (SQFT)	Total (SQFT)	Total (Acre)	% Overall Basin	Surface Runoff Coefficient	Runoff Coefficient for Each Area
Pavement	Road	4842					
			4842	0.11115702	22.28%	0.9	0.1
Building Roofs	Mobile homes	4800					
			4800	0.11019284	22.08%	0.9	0.1
Gravel Area	Everywhere else	12094					
			12094	0.27764004	55.64%	0.8	0.2
		Total=	21736	0.50	100.00%		0.4
					Composite Runoff Coefficient		**0.84**

Runoff Coefficient Calculations		
Project:	Delta Drive Subdivision	PDC ENGINEERS PLAN • DESIGN • CONSTRUCT A RESPEC COMPANY 9109 Mendenhall Mall Rd, Ste. 4, Juneau, AK 99801 907.780.6060 | AECC605
Owner:	Bicknell Inc.	
Date:	11/19/2020	
Prepared By:	M. Minsch	
Checked By:	M. Pusich	

Pipe P-3: Existing 12" CPP	
Total Basin Area (SQFT)=	10626
Total Basin Area (ACRE)=	0.24

Surface Type	Location	Area (SQFT)	Total (SQFT)	Total (Acre)	% Overall Basin	Surface Runoff Coefficient	Runoff Coefficient for Each Area
Pavement	Road	5115					
			5115	0.11742424	48.14%	0.9	0.1
Gravel Area	Everywhere else	5511					
			5511	0.12651951	51.87%	0.8	0.1
		Total=	10626	0.24	100.00%		0.2
					Composite Runoff Coefficient		**0.84**

Pipe P-4: Existing 12" CPP Culvert	
Total Basin Area (SQFT)=	21786
Total Basin Area (ACRE)=	0.50

Surface Type	Location	Area (SQFT)	Total (SQFT)	Total (Acre)	% Overall Basin	Runoff Coefficient	Runoff Coefficient for Each Area
Pavement	Road	7037					
			7037	0.16154729	32.30%	0.9	0.1
Gravel Area	Everywhere else	14750					
			14750	0.33861341	67.70%	0.8	0.3
		Total=	21786	0.50	100.00%		0.4
					Composite Runoff Coefficient		**0.83**

Appendix D
Time of Concentration

Time of Concentration Calculations		
Project:	Delta Drive Subdivision	PDC ENGINEERS PLAN • DESIGN • CONSTRUCT A RESPEC COMPANY 9109 Mendenhall Mall Rd, Ste. 4, Juneau, AK 99801 907.780.6060 | AECC605
Owner:	Bicknell Inc.	
Date:	11/19/2020	
Prepared By:	M. Minsch	
Checked By:	M. Pusich	

Pipe P-1: Existing 12" CPP Culvert	
Time of Concentration	
Distance of Flow (Ft):	393
Time of concentration velocity factor:	20
Slope of Flow Path (Ft/Ft):	0.01
Velocity (Ft/Sec):	2
Time of Concentration (Min):	13.10

Pipe P-2: Proposed 12" CPP Culvert	
Time of Concentration	
Distance of Flow (Ft):	338
Time of concentration velocity factor:	20
Slope of Flow Path (Ft/Ft):	0.01
Velocity (Ft/Sec):	2
Time of Concentration (Min):	11.27

Pipe P-3: Existing 12" CPP Culvert	
Time of Concentration	
Distance of Flow (Ft):	388
Time of concentration velocity factor:	20
Slope of Flow Path (Ft/Ft):	0.01
Velocity (Ft/Sec):	2
Time of Concentration (Min):	12.93

Pipe P-4: Existing 12" CPP Culvert	
Time of Concentration	
Distance of Flow (Ft):	498
Time of concentration velocity factor:	20
Slope of Flow Path (Ft/Ft):	0.01
Velocity (Ft/Sec):	2
Time of Concentration (Min):	16.60

Appendix E
Rainfall Intensity

NOAA Atlas 14, Volume 7, Version 2
Location name: Juneau, Alaska, USA*
Latitude: 58.3922°, Longitude: -134.5604°
Elevation: 50.42 ft**
* source: ESRI Maps
** source: USGS

POINT PRECIPITATION FREQUENCY ESTIMATES

Sanja Perica, Douglas Kane, Sarah Dietz, Kazungu Maitaria, Deborah Martin, Sandra Pavlovic, Ishani Roy, Svetlana Stuefer, Amy Tidwell, Carl Trypaluk, Dale Unruh, Michael Yekta, Erica Betts, Geoffrey Bonnin, Sarah Heim, Lillian Hiner, Elizabeth Lilly, Jayashree Narayanan, Fenglin Yan, Tan Zhao

NOAA, National Weather Service, Silver Spring, Maryland
and
University of Alaska Fairbanks, Water and Environmental Research Center

PF_tabular | PF_graphical | Maps_&_aerials

PF tabular

PDS-based point precipitation frequency estimates with 90% confidence intervals (in inches/hour)[1]

Duration	Average recurrence interval (years)									
	1	2	5	10	25	50	100	200	500	1000
5-min	1.74 (1.40-2.21)	2.03 (1.61-2.62)	2.52 (1.94-3.34)	2.94 (2.22-3.97)	3.50 (2.58-4.86)	3.95 (2.84-5.59)	4.38 (3.10-6.34)	5.05 (3.49-7.45)	5.95 (4.01-9.01)	6.62 (4.38-10.2)
10-min	1.16 (0.936-1.48)	1.36 (1.08-1.76)	1.69 (1.31-2.24)	1.97 (1.49-2.66)	2.35 (1.73-3.26)	2.65 (1.91-3.75)	2.94 (2.08-4.25)	3.40 (2.35-5.01)	4.00 (2.69-6.05)	4.45 (2.94-6.86)
15-min	0.908 (0.728-1.16)	1.06 (0.840-1.37)	1.32 (1.02-1.75)	1.54 (1.16-2.08)	1.84 (1.35-2.55)	2.06 (1.49-2.92)	2.30 (1.62-3.32)	2.65 (1.83-3.90)	3.12 (2.10-4.72)	3.47 (2.30-5.35)
30-min	0.602 (0.484-0.766)	0.704 (0.556-0.908)	0.876 (0.676-1.16)	1.02 (0.770-1.38)	1.22 (0.896-1.69)	1.37 (0.986-1.94)	1.52 (1.07-2.20)	1.76 (1.22-2.59)	2.07 (1.39-3.13)	2.30 (1.52-3.55)
60-min	0.413 (0.332-0.525)	0.482 (0.381-0.622)	0.600 (0.463-0.794)	0.699 (0.528-0.944)	0.834 (0.613-1.16)	0.939 (0.676-1.33)	1.04 (0.736-1.51)	1.20 (0.833-1.78)	1.42 (0.955-2.14)	1.58 (1.04-2.43)
2-hr	0.306 (0.246-0.390)	0.358 (0.283-0.462)	0.447 (0.345-0.592)	0.520 (0.394-0.703)	0.622 (0.457-0.862)	0.698 (0.503-0.990)	0.775 (0.547-1.12)	0.894 (0.619-1.32)	1.05 (0.710-1.59)	1.17 (0.776-1.81)
3-hr	0.270 (0.217-0.343)	0.315 (0.249-0.407)	0.394 (0.304-0.521)	0.459 (0.347-0.620)	0.548 (0.403-0.761)	0.616 (0.444-0.872)	0.683 (0.482-0.987)	0.788 (0.545-1.16)	0.927 (0.625-1.40)	1.03 (0.683-1.59)
6-hr	0.218 (0.175-0.277)	0.255 (0.201-0.328)	0.317 (0.245-0.420)	0.369 (0.279-0.498)	0.441 (0.324-0.612)	0.496 (0.357-0.703)	0.551 (0.389-0.796)	0.636 (0.440-0.938)	0.748 (0.505-1.13)	0.834 (0.552-1.29)
12-hr	0.163 (0.131-0.207)	0.190 (0.150-0.245)	0.234 (0.181-0.310)	0.271 (0.205-0.366)	0.324 (0.238-0.450)	0.368 (0.265-0.521)	0.414 (0.292-0.598)	0.478 (0.331-0.705)	0.563 (0.380-0.852)	0.627 (0.415-0.968)
24-hr	0.118 (0.107-0.131)	0.138 (0.124-0.155)	0.167 (0.147-0.192)	0.192 (0.166-0.225)	0.230 (0.194-0.275)	0.262 (0.218-0.319)	0.298 (0.243-0.369)	0.344 (0.276-0.434)	0.405 (0.317-0.522)	0.451 (0.348-0.591)
2-day	0.080 (0.073-0.089)	0.093 (0.083-0.104)	0.111 (0.098-0.128)	0.127 (0.110-0.148)	0.150 (0.127-0.180)	0.170 (0.141-0.207)	0.192 (0.156-0.237)	0.219 (0.176-0.276)	0.255 (0.200-0.329)	0.283 (0.218-0.370)
3-day	0.063 (0.058-0.070)	0.073 (0.065-0.082)	0.087 (0.076-0.100)	0.098 (0.085-0.115)	0.116 (0.098-0.138)	0.130 (0.108-0.158)	0.146 (0.119-0.181)	0.166 (0.133-0.209)	0.192 (0.151-0.248)	0.212 (0.163-0.278)
4-day	0.054 (0.049-0.060)	0.062 (0.055-0.069)	0.073 (0.064-0.084)	0.082 (0.071-0.096)	0.096 (0.081-0.115)	0.108 (0.090-0.132)	0.121 (0.099-0.150)	0.137 (0.110-0.173)	0.158 (0.124-0.204)	0.174 (0.134-0.228)
7-day	0.040 (0.036-0.044)	0.045 (0.041-0.051)	0.053 (0.047-0.061)	0.060 (0.052-0.070)	0.070 (0.059-0.084)	0.079 (0.065-0.096)	0.088 (0.072-0.109)	0.100 (0.080-0.126)	0.116 (0.091-0.149)	0.127 (0.098-0.167)
10-day	0.033 (0.030-0.037)	0.038 (0.034-0.042)	0.044 (0.039-0.051)	0.050 (0.043-0.058)	0.058 (0.049-0.069)	0.065 (0.054-0.079)	0.073 (0.059-0.090)	0.082 (0.066-0.104)	0.095 (0.075-0.123)	0.105 (0.081-0.138)
20-day	0.025 (0.023-0.028)	0.029 (0.026-0.032)	0.034 (0.030-0.039)	0.038 (0.032-0.044)	0.043 (0.037-0.052)	0.048 (0.040-0.059)	0.053 (0.044-0.066)	0.060 (0.048-0.076)	0.068 (0.054-0.088)	0.075 (0.058-0.098)
30-day	0.022 (0.020-0.025)	0.025 (0.023-0.029)	0.030 (0.026-0.034)	0.033 (0.029-0.039)	0.038 (0.032-0.046)	0.042 (0.035-0.051)	0.046 (0.038-0.058)	0.052 (0.041-0.065)	0.058 (0.046-0.075)	0.064 (0.049-0.083)
45-day	0.020 (0.018-0.022)	0.023 (0.021-0.026)	0.027 (0.023-0.031)	0.030 (0.026-0.035)	0.034 (0.029-0.040)	0.037 (0.031-0.045)	0.041 (0.033-0.050)	0.044 (0.036-0.056)	0.050 (0.039-0.064)	0.054 (0.041-0.070)
60-day	0.018 (0.017-0.020)	0.021 (0.019-0.024)	0.024 (0.022-0.028)	0.027 (0.023-0.032)	0.031 (0.026-0.037)	0.033 (0.028-0.041)	0.036 (0.029-0.045)	0.039 (0.031-0.049)	0.042 (0.033-0.054)	0.045 (0.035-0.059)

[1] Precipitation frequency (PF) estimates in this table are based on frequency analysis of partial duration series (PDS).

Numbers in parenthesis are PF estimates at lower and upper bounds of the 90% confidence interval. The probability that precipitation frequency estimates (for a given duration and average recurrence interval) will be greater than the upper bound (or less than the lower bound) is 5%. Estimates at upper bounds are not checked against probable maximum precipitation (PMP) estimates and may be higher than currently valid PMP values.

Please refer to NOAA Atlas 14 document for more information.

Back to Top

https://hdsc.nws.noaa.gov/hdsc/pfds/pfds_printpage.html?lat=58.3922&lon=-134.5604&data=intensity&units=english&series=pds

PF graphical

PDS-based intensity-duration-frequency (IDF) curves
Latitude: 58.3922°, Longitude: -134.5604°

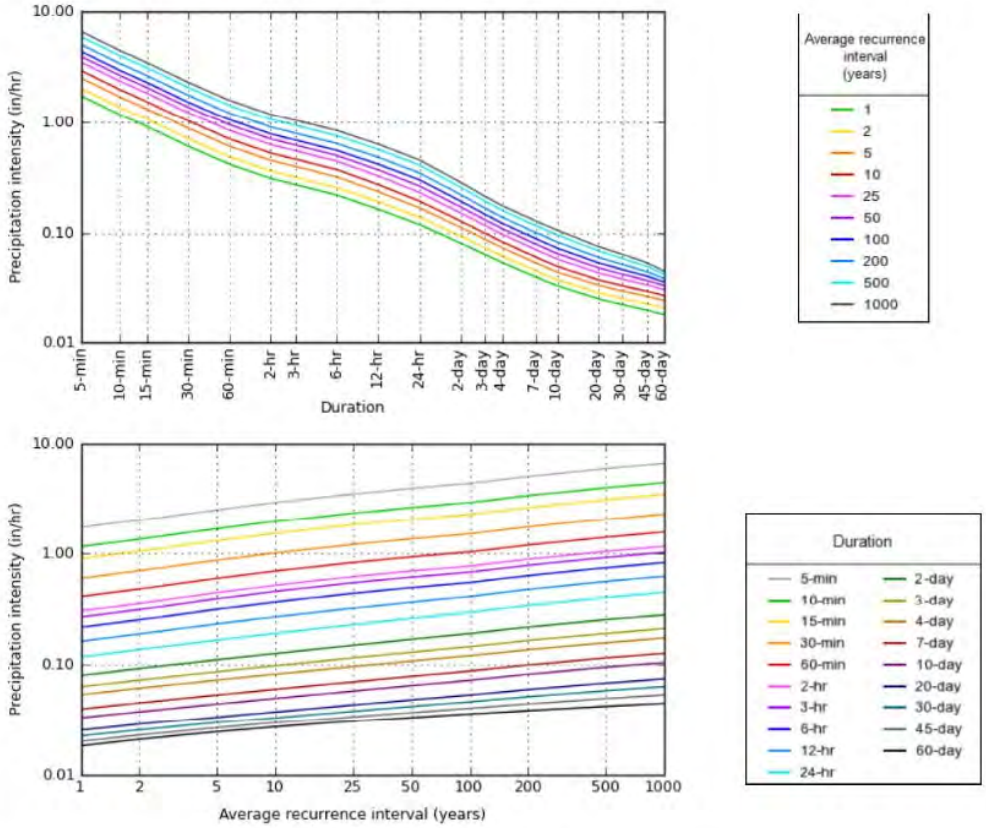

NOAA Atlas 14, Volume 7, Version 2 Created (GMT): Thu Nov 19 20:30:02 2020

https://hdsc.nws.noaa.gov/hdsc/pfds/pfds_printpage.html?lat=58.3922&lon=-134.5604&data=intensity&units=english&series=pds

Maps & aerials

Small scale terrain

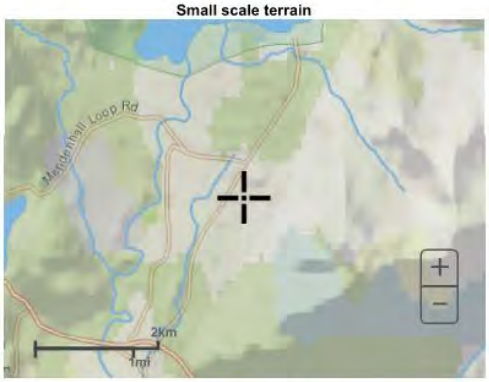

Large scale terrain

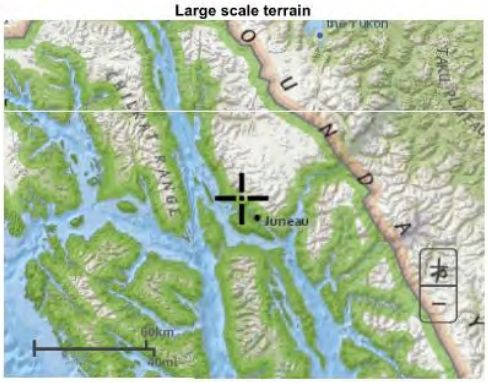

Large scale map

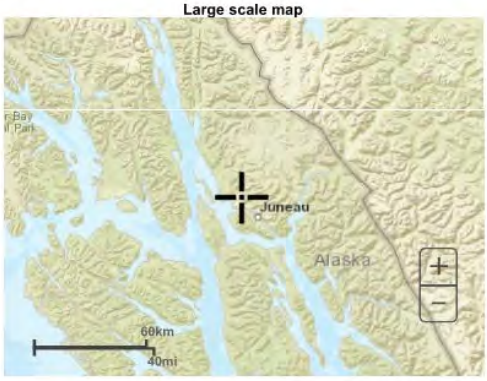

Large scale aerial

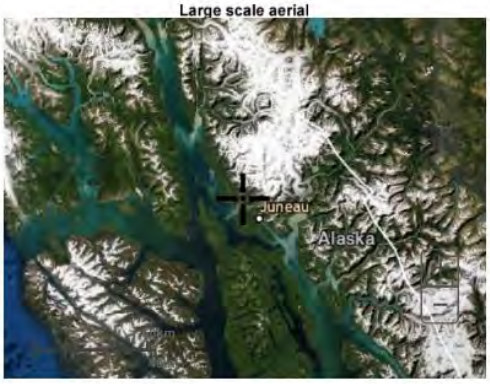

https://hdsc.nws.noaa.gov/hdsc/pfds/pfds_printpage.html?lat=58.3922&lon=-134.5604&data=intensity&units=english&series=pds

Appendix F
Existing & Proposed Capacity Calcs

Discharge Capacity Calculations		
Project:	Delta Drive Subdivision	PDC ENGINEERS PLAN • DESIGN • CONSTRUCT A RESPEC COMPANY 9109 Mendenhall Mall Rd, Ste. 4, Juneau, AK 99801 907.780.6060 | AECC605
Owner:	Bicknell Inc.	
Date:	11/19/2020	
Prepared By:	M. Minsch	
Checked By:	M. Pusich	

The following equation was used to calculate the capacity of pipes P-1, P-2, P-3 and P-4 that drain into the existing Delta Drive ditch system. Capacity was also calculated for the 18" CPP culvert that will transport all of the water discharged from the proposed site into the Delta Drive storm system. The equation is from "Urban Drainage Design Manual: Hydraulic Engineering Circular No. 22, Third Edition."

$$Q = (\mathrm{K/n})\ \mathrm{x}\ \mathrm{A}\ \mathrm{x}\ R^{0.67} \mathrm{x}\ S^{0.5}$$

Q= Discharge in cubic feet per second (cfs)
K = Coefficient for English units (1.486)
n = Manning's coefficient of roughness, obtained from Table 5-3, Page 5-5, of the CBJ Stormwater Manual
A = Cross sectional area in square feet
R = Hydraulic radius
S= Slope

Pipe P-1: Existing 12" CPP Culvert

Inlet Invert=95.19, Outlet Invert=94.98, Length=43', n=0.014. The Manning's n value of 0.014 was determined by the pipe type (CPP-smooth interior) Table 5-3.

	k	n	A	R	S		
Q (cfs)	1.486	0.014	0.79	.25	0.006	=	2.57

Pipe P-2: Proposed 12" CPP Culvert

Inlet Invert=96.55, Outlet Invert=96.20, Length=70', n=0.014. The Manning's n value of 0.014 was determined by the pipe type (CPP-smooth interior) Table 5-3.

	k	n	A	R	S		
Q (cfs)	1.486	0.014	0.79	0.25	0.005	=	2.34

Pipe P-3: Existing 12" CPP Culvert

Inlet Invert=95.21, Outlet Invert=94.88, Length=54', n=0.014. The Manning's n value of 0.014 was determined by the pipe type (CPP-smooth interior) Table 5-3.

	k	n	A	R	S		
Q (cfs)	1.486	0.014	0.79	0.25	0.0061	=	2.59

Pipe P-4: Existing 12" CPP Culvert

Inlet Invert=95.84, Outlet Invert=94.88, Length=5', n=0.014. The Manning's n value of 0.014 was determined by the pipe type (CPP-smooth interior) Table 5-3.

	k	n	A	R	S		
Q (cfs)	1.486	0.014	0.79	0.25	.1920	=	14.51

Pipe P-5: Existing 18" CPP Culvert

Inlet Invert=95.21, Outlet Invert=94.88, Length=5', n=0.014. The Manning's n value of 0.014 was determined by the pipe type (CPP-smooth interior) Table 5-3.

	k	n	A	R	S		
Q (cfs)	1.486	0.014	1.77	0.375	.004	=	14

CITY AND BOROUGH OF JUNEAU
ALASKA'S CAPITAL CITY

Engineering & Public Works Department
155 South Seward Street
Juneau, Alaska 99801
Phone: 907-586-0800 | Fax: 907-463-2606

DATE: December 12, 2020

TO: Laurel Christian, CDD

FROM: Autumn Sapp, Engineering & Public Works Department

RE: SMP20200004 – Delta Drive Subdivision, Major Subdivision Engineering & Public Works Department Review

Engineering and Public Works Department has completed a preliminary review of the proposed Delta Drive Subdivision to create a total of 15 lots. The following has been determined as required by CBJ code 49.15.402(c)(4)(e):

1. The submitted drainage plan is conforms to drainage and water quality requirements. The plan is approved by Engineering.

2. The Delta Drive Subdivision will not change the current connection with Delta Drive and the existing configuration is acceptable.

3. The proposed improvements conform to the requirements of this title and can be feasibly constructed in accordance with Title 49.

Invitation to Comment

On a proposal to be heard by the CBJ Planning Commission

Your Community, Your Voice

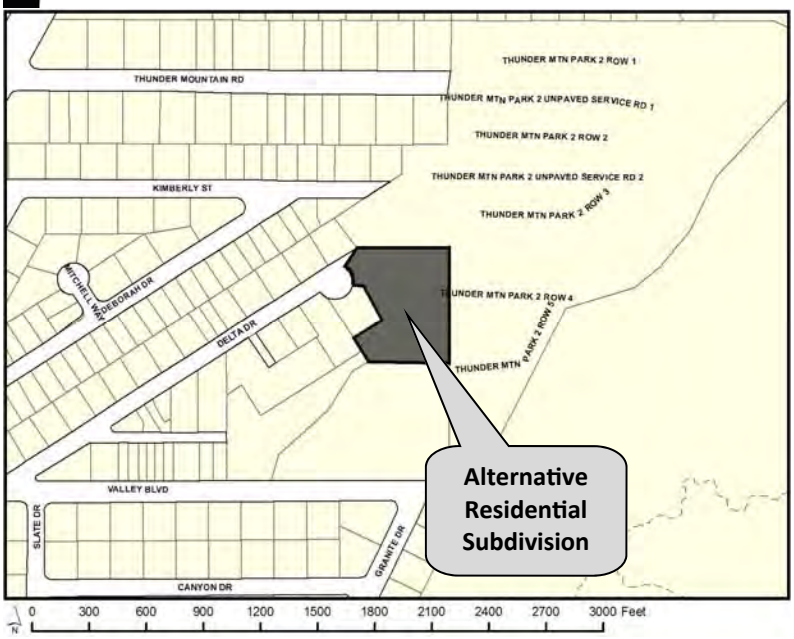

CITY AND BOROUGH OF JUNEAU
ALASKA'S CAPITAL CITY
COMMUNITY DEVELOPMENT
155 S. Seward Street Juneau, Alaska 99801

TO:

An application has been submitted for consideration and public hearing by the Planning Commission for an **Alternative Residential Subdivision creating 15 lots** at **4090 Delta Drive** in a **D18 zone**.

TIMELINE

Staff Report expected to be posted **Monday, January 4, 2020** at **https://juneau.org/community-development/planning-commission.** Find hearing results, meeting minutes and more here as well.

Now through Dec. 21	Dec. 22 — noon, Jan. 11	HEARING DATE & TIME: 7:00 pm, Jan. 12, 2021	Jan. 13
Comments received during this period will be sent to the Planner, **Laurel Christian,** to be included as an attachment in the staff report.	Comments received during this period will be sent to Commissioners to read in preparation for the hearing.	This virtual meeting will be by video and telephonic participation only. To join the Webinar, visit: https://juneau.zoom.us/j/93626358724. The Webinar ID is: 936 2635 8724. To join by telephone, call: +1 253 215 8782 or +1 346 248 7799 or +1 669 900 6833 or +1 301 715 8592 or +1 312 626 6799 or +1 929 436 2866 and enter the Webinar ID.	The results of the hearing will be posted online.

Phone: **(907)586-0715** ◆ Email: **pc_comments@juneau.org**
Mail: **Community Development, 155 S. Seward St, Juneau AK 99801**

Case No.: SMP2020 0004/ARP2020 0001
Parcel No.: 5B2401620011
CBJ Parcel Viewer: http://gis.juneau.org

Laurel Christian

From: dblommer@bicknellinc.com
Sent: Monday, December 28, 2020 10:23 AM
To: Laurel Christian
Subject: Delta Dr Sign Posted
Attachments: Resized_20201228_092437.jpeg

EXTERNAL E-MAIL: BE CAUTIOUS WHEN OPENING FILES OR FOLLOWING LINKS

Hi Laurel,

Here is the picture of the sign at Delta Dr. Let me know if we need to do anything else.

Thanks,
David

CITY AND BOROUGH OF JUNEAU
ALASKA'S CAPITAL CITY
COMMUNITY DEVELOPMENT

(907) 586-0757
Jill.Maclean@juneau.org
www.juneau.org/CDD
155 S. Seward Street • Juneau, AK 99801

MEMO

From: **Jill Maclean, AICP, Director**

To: **Michael LeVine, Planning Commission Chair**

Case Number: **ARP2020 0001 and SMP2020 0004**

RE: Staff Report Correction

Staff received several questions and requests for clarification on staff reports ARP2020 0001 and SMP2020 0004. Below, please find corrections and / or additional clarification. Items bolded are necessary revisions or corrections to the staff report.

ARP2020 0001:

- **Page 3 of 12 (packet page 61): Inaccurately states that only single-family and accessory apartments are permissible. The Alternative Residential Subdivision (ARS) ordinance allows for residential uses (49.15.920(m)), including multifamily dwellings, e.g. condominiums, and is not restricted to single-family dwellings. The residential uses follow the underlying zoning district.**

SMP2020 0004:

- Page 4 of 8 (packet page 149): Clarifying that the staff report is accurate for the number of dwelling units proposed on this site. Density, under the ARS 49.15.920(e)(1) *Density*, is calculated by, *"The number of dwelling units permitted in the development shall be calculated by multiplying the maximum number of dwelling units per gross acre permitted in the underlying zoning district by the number of acres in the alternative residential subdivision and rounding to the nearest whole number."*
    - In this situation, the parent lot is 79,189 square feet in a D18 zoning district. Minimum lot size is 5,000 square feet, and the maximum number of dwelling units is 33. The developer is proposing 14 dwelling units.
    - In other words, the density is based upon the acreage of the parent lot; and a developer may choose how to divvy up the density; and even if a unit-lot on its own meets or exceeds the minimum lot size of the underlying zoning district, additional units are not permissible if the maximum number of dwelling units already exists on the other unit lots. This does not include density bonuses, which are not a consideration for this project.
    - Should the developer choose to modify the type of dwellings or add additional dwelling units, a modification to the plat and / or the Alternative Residential Plan may be required depending on the proposal.

- Page 5 of 8 (packet page 150): Clarifying that the staff report is accurate. Roads within an ARS development may be private *or* public (if the developer builds to city standards, the road may be adopted as a public street).
    - An ARS is permitted to have a private access roads within the development, if the criteria in 49.15.920(f) is met, and these are listed and discussed in the table. The table establishes that the ARS meets the criteria for private access within the development.
    - Exempting the access within the development from 49.35 does not exempt the parent lot from fronting and accessing onto a publically maintained right-of-way. Access to the development must be through a public right-of-way – this is criteria is met, because the parent lot fronts accesses onto Delta Drive.

Page 4 of 8 (packet page 149) Plat Notes:

- **First Plat Note on this page is not completely accurate and should be DELETED.** Plat Note Reads: At time of recording, Lots 2 through 11 and 13 through 15 are limited to one single-family dwelling. Lot 12 may be permitted one single-family dwelling and one accessory apartment. See CBJ 49.15 article ix for current regulations.
    - (Note: Generally, in multi-family zoning districts, units are units and are not considered "accessory apartments" because multiple units are permitted on one lot).

- Third Plat Note should be clarified to read:
    - **Plat Note: Per CBJ 49.15.920(j), No parking areas, dwelling units, unit-lots, or permissible uses may be located within the perimeter buffer. Access to the development may cross a portion of the buffer.**

Planning Commission

(907) 586-0715
PC_Comments@juneau.org
www.juneau.org/plancomm
155 S. Seward Street • Juneau, AK 99801

PLANNING COMMISSION
NOTICE OF DECISION
Date: May 12, 2021
File No.: SMF2021 0002

Bicknell, Inc.
ATTN: David Blommer
PO Box 33517
Juneau, AK 99801

Proposal:	Final plat approval for the Delta Drive Subdivision, an Alternative Residential Subdivision creating 14 unit-lots and 1 parent lot.
Property Address:	4090 Delta Drive
Legal Description:	Thunder Mountain Park Tract 1A
Parcel Code No.:	5B2401620011
Hearing Date:	May 11, 2021

The Planning Commission, at its regular public meeting, adopted the analysis and findings listed in the attached memorandum dated April 27, 2021, and APPROVED the final plat to be conducted as described in the project description and project drawings submitted with the application.

Attachment: April 27, 2021 memorandum from Laurel Christian, Community Development, to the CBJ Planning Commission regarding SMF2021 0002.

May 11, 2021 memorandum from Laurel Christian, Community Development, to the CBJ Planning Commission regarding SMF2021 0002.

This Notice of Decision does not authorize any construction. Prior to starting any project, it is the applicant's responsibility to obtain the required building permits.

This Notice of Decision constitutes a final decision of the CBJ Planning Commission. Appeals must be brought to the CBJ Assembly in accordance to CBJ §01.50.030. Appeals must be filed by 4:30 P.M. on the day twenty days from the date the decision is filed with the City Clerk, pursuant to CBJ §01.50.030(c). Any action by the applicant in reliance on the decision of the Planning Commission shall be at the risk that the decision may be reversed on appeal (CBJ §49.20.120).

Effective Date: The permit is effective upon approval by the Commission, May 11, 2021.

	May 19, 2021
Michael LeVine, Chair Planning Commission	Date
	May 19, 2021
Filed With City Clerk	Date

cc: Plan Review

NOTE: The Americans with Disabilities Act (ADA) is a federal civil rights law that may affect this subdivision. ADA regulations have access requirements above and beyond CBJ - adopted regulations. Owners and designers are responsible for compliance with ADA. Contact an ADA - trained architect or other ADA trained personnel with questions about the ADA: Department of Justice (202) 272-5434, or fax (202) 272-5447, NW Disability Business Technical Center (800) 949-4232, or fax (360) 438-3208.

PLANNING COMMISSION AGENDA
THE CITY AND BOROUGH OF JUNEAU, ALASKA

AME2021 0001: Amend zoning from D15 to General Commercial, General Commercial/Light Commercial, or Light Commercial - APPROVED AS AMENDED

AGENDA ITEM:

Case No.: AME2021 0001
Applicant: TDLH, LLC
Location: North Douglas Highway
Proposal: Amend zoning from D15 to General Commercial, General Commercial/Light Commercial, or Light Commercial

RECOMMENDATION:

Staff recommends the Planning Commission ADOPT the Director's analysis and findings and forward a recommendation of APPROVAL to the Assembly for a rezone from D15 to D15(T)LC.

The approval for completion of the transition zone subject to the following condition:

1. Prior to upgrading the zoning from D15 to LC, additional public infrastructure must be constructed. This may include the Douglas Bench Road, a second crossing in North Douglas, or improvements to the Douglas roundabout and the 10th and Egan intersection. The purpose of this infrastructure is to ensure that any additional higher density development would improve, and not aggravate, existing issues with traffic flow and pedestrian safety.
2. Prior to upgrading the zoning from D15 to LC, a Comprehensive Land Use Designation Map amendment is required from MDR to HDR.

ATTACHMENTS:

	Description	Upload Date	Type
	Staff Report for AME2021 0001	5/3/2021	Staff Report
	Presentation from Public Meeting on March 11, 2021	5/4/2021	Presentation
	Notes from Public Meeting on March 11, 2021	5/4/2021	Miscellaneous
	Presentation for AME2021 0001	5/11/2021	Presentation
	Notice of Recommendation for AME2021 0001	5/19/2021	Notice of Recommendation

CITY AND BOROUGH OF JUNEAU
ALASKA'S CAPITAL CITY
COMMUNITY DEVELOPMENT

PLANNING COMMISSION STAFF REPORT
REZONE AME2021 0001
HEARING DATE: MAY 11, 2021

(907) 586-0715
CDD_Admin@juneau.org
www.juneau.org/CDD
155 S. Seward Street • Juneau, AK 99801

DATE: April 30, 2021

TO: Michael LeVine, Chair, Planning Commission

BY: Joseph Meyers, Planner I

THROUGH: Jill Maclean, Director, AICP

PROPOSAL: Applicant requests a rezone of Channel View Lot 1 from D15 to General Commercial (GC).

STAFF RECOMMENDATION: Staff recommends the Planning Commission recommend APPROVAL to the Assembly for a rezone from D15 to D15(T)LC, and a Comprehensive Plan Land Use Designation Map amendment from Medium Density Residential (MDR) to High Density Residential (HDR) .

KEY CONSIDERATIONS FOR REVIEW:

- Comprehensive Plan Land Use Designation is Medium Density Residential (MDR)
- A rezone to GC would not be in conformance with the Land Use Designation under the 2013 Comprehensive Plan
- Staff recommends approval of an alternative, which would establish a transition zone for the lot
- The transition zone upgrade would be contingent on access

GENERAL INFORMATION	
Property Owner	TDLH LLC.
Applicant	Travis Arndt
Property Address	Not Assigned
Legal Description	Channel View Lot 1
Parcel Number	6D0601150011
Zoning	D15
Land Use Designation	MDR
Lot Size	671,260 sq. ft. (15.41 acres)
Water/Sewer	CBJ
Access	North Douglas Highway
Existing Land Use	Vacant
Associated Applications	N/A

ALTERNATIVE ACTIONS:

1. **Amend:** recommend an amended rezone boundary; recommend an alternative zoning district; or recommend conditions.
2. **Deny:** recommend denial of the requested rezone. Planning Commission must make its own findings.
3. **Continue:** continue the hearing to a later date if determined that additional information or analysis is needed to make a decision, or if additional testimony is warranted.

ASSEMBLY ACTION REQUIRED:

Assembly action is required for this rezone.

STANDARD OF REVIEW:

- Quasi-judicial decision
- Requires five (5) affirmative votes for approval
- Code Provisions:
  - 49.75.120
  - 49.10.170(d)
  - 49.80

The Commission shall hear and decide the case per *49.75.120 - Restrictions on rezoning*. *Rezoning requests covering less than two acres shall not be considered unless the rezoning constitutes an expansion of an existing zone. Rezoning requests which are substantially the same as a rezoning request rejected within the previous 12 months shall not be considered. A rezoning shall only be approved upon a finding that the proposed zoning district and the uses allowed therein are in substantial conformance with the land use maps of the comprehensive plan.*

SITE FEATURES AND ZONING

SURROUNDING ZONING AND LAND USES	
North (GC)	Disused rock quarry
South (D3)	Vacant
East (D15)	North Douglas Highway
West (D3)	Vacant

SITE FEATURES	
Anadromous	No
Flood Zone	No
Hazard	No known
Hillside	Yes
Wetlands	No
Parking District	No
Historic District	No
Overlay Districts	None

CURRENT ZONING MAP

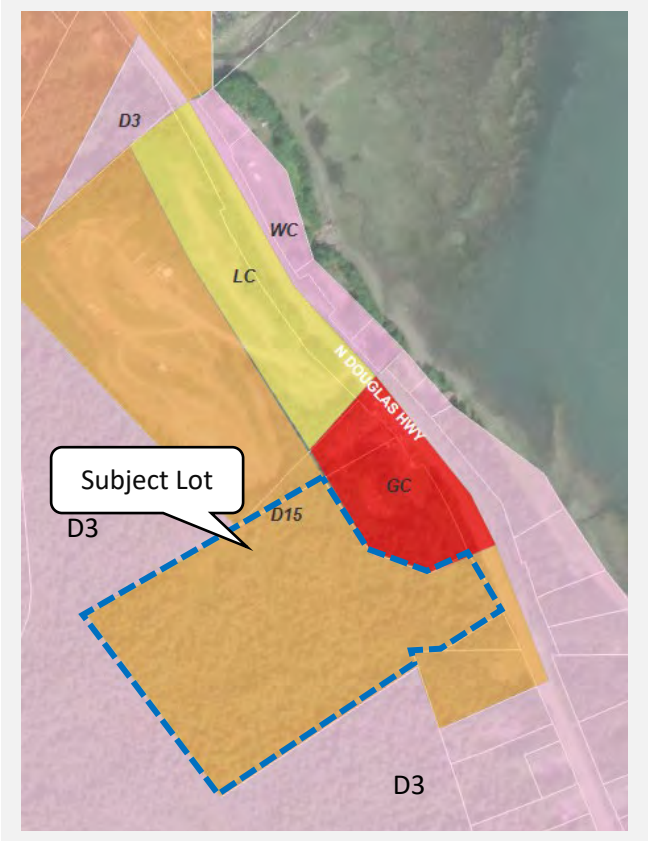

LAND USE DESIGNATION MAP

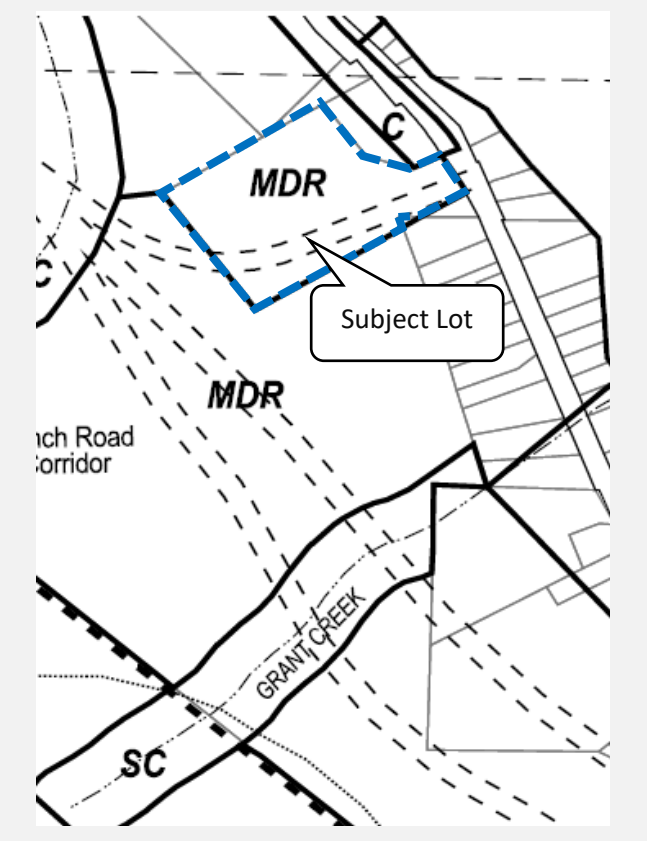

BACKGROUND INFORMATION

Project Description – The applicant seeks to rezone 15.41 acres from D15 to General Commercial (GC) zoning. Staff proposes a rezone from D15 to D15 transition Light Commercial [D15(T)LC] upon the provision of alternative vehicular access; this is discussed further below.

Background – The lot was platted in 1918 through USS 2433 as the homestead of William Denomy. In 1998, the lot was platted into the current configuration by Plat 98-04.

At the corner of North Douglas Highway, the lot abuts a GC zoning district, which was rezoned from RR(T)D3 to GC in 1999 through Ordinance 99-01am. This rezone was allowed to take place if "the use of the property shall be restricted to motor vehicle sales and repair," restricting any other commercial uses on the lot. GC zoning conforms with the Comprehensive Plan Land Use Map Commercial designation for this area.

In 2015, upon establishment of service of public sewer, 27 parcels along North Douglas Highway zoned D3, D5, and RR(T)D3 were rezoned to D15, including Capital View Lot 1.

Per the Comprehensive Plan, the lot and some of the surrounding area have a Land Use Designation of Medium Density Residential (MDR). These lands are characterized by urban *residential lands for multifamily dwelling units* at *densities ranging from **5 to 20 units per acre**. Any commercial development should be of a scale consistent with a residential neighborhood, as regulated in the Table of Permissible Uses (CBJ 49.25.300*). (emphasis added)

Zoning History – The lot was zoned RR(T)D3, a transition zone in anticipation of connection to CBJ water and sewer services. In 2015, water and sewer were provided and the 43 lots comprising the transition zone were upzoned.

Most of the lots were rezoned D3, while Channel View Lot 1 was rezoned D15. Due to the location of this lot in the MDR (medium density residential) land use designation area, it had a unique opportunity to achieve higher density zoning than most other lots in this rezone.

Channel View Lot 1 was chosen for upzoning to D15 for four reasons as laid out in staff report AME 2013-0016 (ATTACHMENT I):

1. "Transition from RR to D3, D5, and D10SF would not be consistent because they are not consistent with the desire for higher density multi-family development"
2. "D10, D15, and D18 were zoning designation candidates that could be consistent with the Plan"
3. While D18 would technically be consistent with the Comprehensive Plan, "D18 intends to have midrise-type developments which aren't currently in the neighborhood"
4. D18 "isn't consistent with the D15 transition designation that the property already has."

The staff report for AME 2013-0016 heavily referenced a 2009 TIA (ATTACHMENT E), which projected a significant impact on transportation infrastructure should D18, and other higher densities, be permitted along North Douglas Highway. This impact was projected to drop the Level of Service from B to F in the morning peak hour at the Douglas Highway/North Douglas Highway roundabout. The 10th & Egan intersection, which already has a LOS of E for morning peak hour, would drop to an F, further exacerbating congestion at a highly impacted intersection. The Staff Report for AME 2013-0016 projected increased density above D18 would lead to an LOS of F based on this 2009 TIA data.

The below table summarizes zoning history for the lot.

Year	Zoning	Summary
1918	None	The original lot was platted in 1918 through USS 2433.
1969	R12	In 1969, the lot was zoned R12, which required a minimum lot size of 12,000 square feet, minimum lot width of 110 feet, and a minimum lot depth of 100 feet.
1987	RR(T)D3	In 1987, the lot was rezoned to Rural Reserve. In the RR zoning district, the minimum lot size is 36,000 square feet, the minimum lot width is 150 feet, and the minimum lot depth is 150 feet.
2015	D15	In 2015, the lot was rezoned from RR(T)D3 to D15 after improvement requirements were met.

ZONING ANALYSIS

CBJ29.25.200 Zoning Districts Defined – The following table compares the current versus proposed zoning districts for the site. The applicant proposes a rezone to GC.

Current Zoning – D15	Applicant's Preferred Zoning – GC	Staff Recommendation – D15(T)LC conditional upon improved access
The D15, residential district, is intended to accommodate primarily multifamily development at a density of 15 dwelling units per acre. This is a relatively low-density multifamily residential district.	*The GC, general commercial district, is intended to accommodate most commercial uses. Commercial activities are permitted outright in the zone except for those few uses that are listed as conditional uses to ensure compatibility. Residential development is allowed in mixed- and single-use developments in the general commercial district.*	*The LC, light commercial district, is intended to accommodate commercial development that is less intensive than that permitted in the general commercial district. Light commercial districts are primarily located adjacent to existing residential areas. Although many of the uses allowed in this district are also allowed in the GC, general commercial district, they are listed as conditional uses in this district and therefore require commission review to determine compatibility with surrounding land uses. A lower level of intensity of development is also achieved by stringent height and setback restrictions. Residential development is allowed in mixed- and single-use developments in the light commercial district.*

Current Zoning – The current zoning of the lot is D15 Residential with a maximum density of 15 dwelling units per acre. Commercial uses in this zoning district require a Conditional Use Permit with some commercial uses being prohibited outright.

Image 1 Current Zoning

Applicant's Preferred Zoning – The preferred proposed zoning of the lot is GC (General Commercial) with a maximum density of 50 dwelling units per acre. This option provides flexibility in how the land may be used by permitting many diverse commercial uses with opportunity for higher residential density than D15 zoning. The applicant has requested LC (Light Commercial) zoning as an alternative to GC, without transportation infrastructure improvements.

Image 2 Applicant's Preferred Zoning

Staff's Recommended Zoning D15(T)LC – The recommended rezoning of the lot is D15(T)LC with a maximum density of 30 dwelling units per acre. This recommendation will require that specified conditions are met before the lot transitions to the LC zoning district. Many of the permissible uses in LC require a conditional use permit, providing opportunity for public process. In comparison, many of the same uses are allowed in the GC zoning district without a conditional use permit, and do not require a public process.

Per the land use code, LC is intended to be a *transitional district between residential and commercial zoning districts* (emphasis added). The rear of the lot is zoned D3, and this land is undeveloped and City-owned. The developed land to the north is zoned D15 and GC, with the D15 land in this area being a disused gravel pit. The D15 land to the south is currently used for a single-family structure.

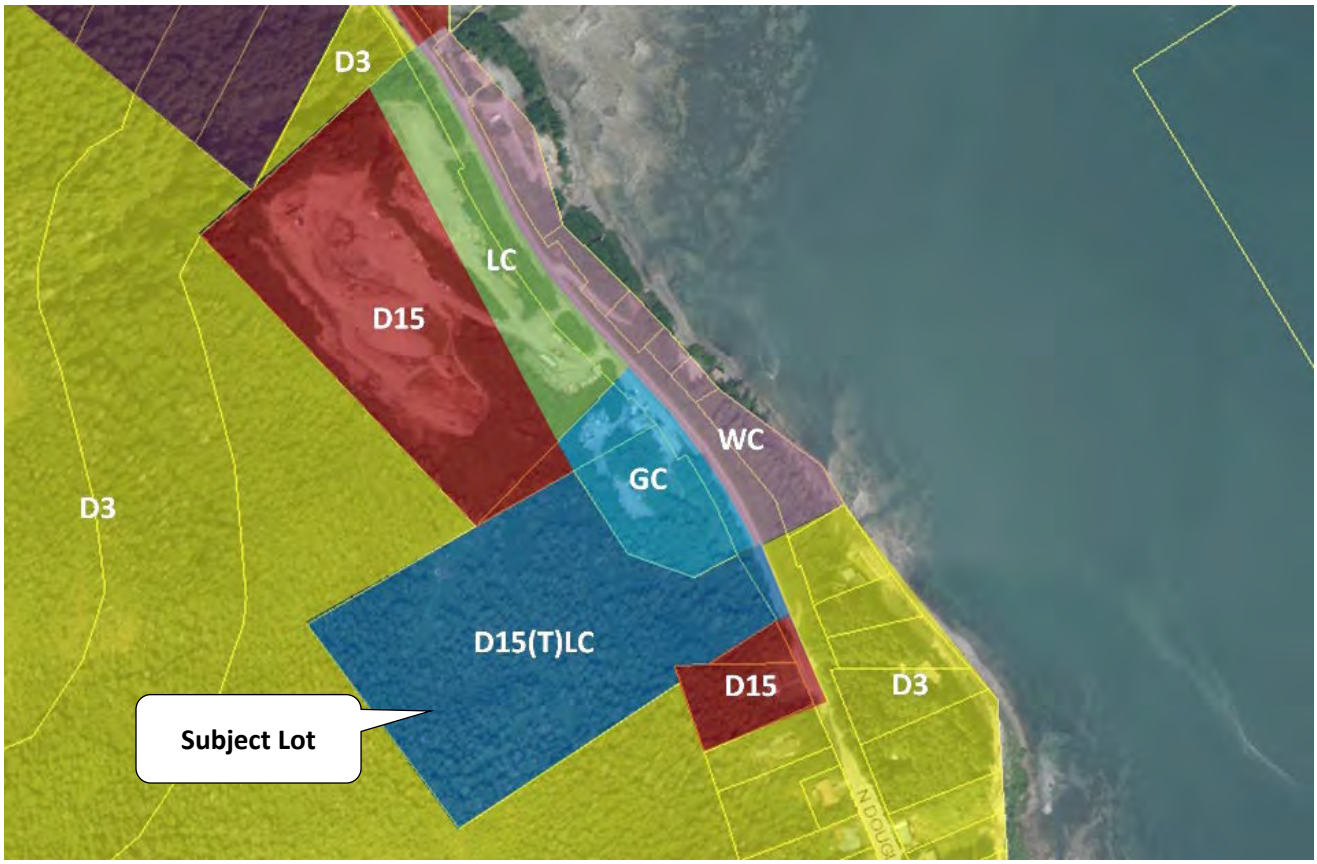

Image 3 Staff's Recommended Zoning

CBJ 49.25.300 Table of Permissible Uses Comparison – The lot is currently undeveloped, thus no uses would become nonconforming with this rezoning. The uses listed below demonstrate uses that may be permitted based on the proposed rezone. A complete comparison table is available in Attachment C. Uses listed in the table below are categorized as DEPT or CUP. Uses require either department approval (DEPT) or Planning Commission (CUP) approval. Some uses may have both listed and will depend on the intensity of the use. Minor development requires department approval; major development requires Planning Commission approval.

Use Description	Current Zoning D15	Applicant's Preferred Zoning GC	Staff Recommendation* D15(T)LC
Multi-family dwellings	DEPT, CUP	DEPT, CUP	DEPT, CUP
Light manufacturing	CUP	DEPT, CUP	DEPT, CUP
Small restaurants, less than 1,000 square feet without drive through service	CUP	DEPT	DEPT
All storage within completely enclosed structures	Not permitted	CUP	DEPT
Storage of explosives and ammunition	Not permitted	Not permitted	Not permitted
Mining operations	Not permitted	Not permitted	Not permitted
Sand & gravel operations	Not permitted	CUP	CUP
Open air markets (farm, craft, flea, and produce)	Not permitted	DEPT, CUP	DEPT

***Describes LC zoning to be applied once conditions for transition have been met.**

Some uses that are not allowed under D15 zoning are permissible in commercial zoning districts. The examples above illustrate the diversity of uses in each proposed zoning district type. One item of note, some of the more

intensive uses remain prohibited in all the proposed zoning districts. Examples include mining, and storage of explosives and ammunition. However, uses such as open air markets, light manufacturing, small restaurants, and storage within completely enclosed structures become permissible.

CBJ 49.25.400 Dimensional Standards – The lot currently meets or exceeds dimensional standards, including lot size, lot width, and lot depth under all proposed zoning districts. No structures currently exist on the lot; setbacks, lot coverage, vegetative cover, and structure height standards must be met for future development.

	Current Zoning	**Proposed Zoning**	**Staff Recommendation**
Table of Dimensional Standards Rezone Request 15.41 Acres	**D15 (15/DU Acre)**	**GC (50/DU Acre)**	**D15(T)LC (30/DU Acre)**
Maximum # of dwelling units, **unsubdivided**	231 units	770 units	462 units
Maximum # of dwelling units, **subdivided**	134 units	672 units	336 units
Maximum # of lots, **subdivided**	134 lots	336 lots	336 lots
Maximum height limit	35 feet	55 feet	45 feet
Maximum lot coverage	50%	None	None
Vegetative cover	30%	10%	15%
Minimum lot size	5,000 square feet	2,000 square feet	2,000 square feet
Minimum lot width	50 feet	20 feet	20 feet
Minimum lot depth	80 feet	60 feet	80 feet
Minimum front yard setback	20 feet	10 feet	25 feet
Minimum street side yard setback	13 feet	17 feet	10 feet
Minimum side yard setback	5 feet	10 feet	10 feet
Minimum rear yard setback	15 feet	10 feet	10 feet

CBJ 49.25.500 Density – The 2013 Comprehensive Plan states that buildable lands within the Urban Service Area Boundary (USAB) "*should be developed as medium- to high-density affordable housing or mixed residential and commercial developments wherever possible and practicable*." (Page 13).

The applicant's preferred zoning, GC, allows for the highest density of the three proposed rezoning options with 770 possible dwelling units, and allows commercial and residential mixed-use developments. The transition rezone to LC provides for the potential of 462 dwelling units, and allows for commercial and residential mixed-use developments (see table above). The dwelling unit estimates do not include land for access, utilities or site features that could limit the developable area. As stated above, GC does not conform to the Land Use Designation, and is not in substantial conformance with the Comprehensive Plan.

Potential for Subdivision – Current zoning would potentially provide for subdivision creating 134 lots with a minimum lot size of 5,000 square feet. Under GC or LC, that number would grow to a potential 336 lots (see table above). This estimate does not include rights-of-way requirements, easements for access and utilities, or site features that could limit the developable area. The transition rezone provides an opportunity to subdivide into smaller square footage lots while increasing the number of allowable dwelling units per lot, once adequate access has been constructed to address the traffic impact analysis. Policy 4.3 of the Comprehensive Plan has the stated goal of designating "an adequate supply of buildable land within the urban service area, and particularly along transit corridors, for residential use at densities that can produce housing affordable to all economic groups." The plan goes on to say that "a density of 30 dwelling units per acre, or greater, along major transit corridors is recommended to produce affordable housing and to make efficient use of transit services therein."

TRAFFIC AND TRANSPORTATION

Non-motorized transportation – There are no sidewalks along North Douglas Highway. Currently there are wide asphalt shoulders directly in front of the property that serve as de facto bicycle lanes.

Proximity to Public Transportation – The lot abuts North Douglas Highway and the Capital Transit Route 12 Juneau-North Douglas line. This bus line has designated stops, and can be flagged down at any location along North Douglas Highway where it is safe to stop. According to the Comprehensive Plan, buildable lands within the USAB should be zoned for higher densities. "This is particularly true for lands located within walking distance (approximately one quarter mile) of public transit service" (page 13). The lot is within a quarter mile of a transit line.

Rights-of-Way (ROW) –The 2013 Comprehensive Plan maps indicated a potential bench road alignment on this lot. The applicant does not seek to develop the road, and is open to discussion with the City about securing the right-of-way for this proposed future project.

According to CBJ 49.40.300, a traffic impact analysis (TIA) is required when a development is projected to generate more than 500 average daily trips (ADTs). CBJ definition of development does not include "rezone," and so rezones do not trigger the need for a TIA. Eventual development may trigger one depending on estimated generated traffic.

In 2009, a TIA was completed for the intersection at 10th and Egan, and the intersection of Douglas Highway and North Douglas Highway. At that time, the Level of Service (LOS) at the 10th and Egan intersection was an E grade LOS in the morning peak hour, and a D grade LOS in the evening peak hour. The study concludes that traffic generated by future development along North Douglas Highway will negatively impact the LOS at The Douglas roundabout and the 10th and Egan intersection.

An LOS of "A" means that traffic is "free flowing" with minimal delay. An LOS of "F" means that traffic is "forced flow (jammed)" with significant delays. A full Level of Service Criteria description is available in Attachment E.

According to feedback on this rezone provided by DOT&PF, *"a TIA may be required and which may result in some necessary mitigating action. We have concerns about the ability of North Douglas Highway and the bridge to handle the additional traffic. As well, high density development without any sidewalks could prove problematic. That all said, the TIA is the appropriate process to move forward with analysis of impacts."*

Access	Roadway Classification	Current LOS (AM)*	Current LOS (PM)*
North Douglas Highway Roundabout	Minor Arterial	B	A
10th & Egan intersection	Arterial	E	D

***According to a TIA conducted in 2009**

Access	Roadway Classification	Projected LOS AM (D18 zoning)*	Projected LOS PM (D18 zoning)*
North Douglas Highway Roundabout	Minor Arterial	F	E
10th & Egan intersection	Arterial	F	F

***Projections from a TIA conducted in 2009**

COMMUNITY SERVICES

The table below summarizes community services that may be affected by the proposed rezone.

Service	Summary
Water/Sewer	Public; provided by CBJ
Fire Service	Capital City Fire Rescue
Schools	Sayéik: Gastineau Community School, Juneau-Douglas High School, Dzantik'i Heeni Middle School; Juneau Community Charter School

ENVIRONMENTAL, CONSERVATION, HISTORIC, AND ARCHEOLOGICAL RESOURCES

The table below summarizes environmental, conservation, historic, and archeological resources that may be affected by the proposed rezone.

Resource	Summary
Conservation	No
Wetlands	No
Anadromous	No
Historic	No
Archeological	No

CONFORMITY WITH ADOPTED PLANS

2013 COMPREHENSIVE PLAN VISION: *The City and Borough of Juneau is a vibrant State Capital that values the diversity and quality of its natural and built environments, creates a safe and satisfying quality of life for its diverse population, provides quality education and employment for its workers, encourages resident participation in community decisions and provides an environment to foster state-wide leadership.*

Compliance with the Comprehensive Plan – The lot has a Comprehensive Plan future land use designation of Medium Density Residential (MDR) according to Map L of the Comprehensive Plan (Attachment D). This land use designation is described in the Comprehensive Plan as follows*:*

> *Medium Density Residential – These lands are characterized by urban residential lands for multifamily dwelling units* ***at densities ranging from 5 to 20 units per acre****. Any commercial development should be of a scale consistent with a residential neighborhood, as regulated in the Table of Permissible Uses (CBJ 49.25.300).* (emphasis added)

The proposed rezone of the lot is located within Subarea 9: Douglas & West Juneau of the Comprehensive Plan. The community form of this subarea is designated as Urban in downtown Douglas and West Juneau. The Comprehensive Plan provides guidelines and considerations for this subarea that apply specifically to this rezone request:

1. *Provide for additional medium- to high-density residential development in areas with access to arterials and served by municipal sewer and water and adequate road and intersection capacity (****to Level of Service D or better****). (emphasis added)*

8. *Future development in North Douglas, West Juneau or downtown Douglas will require improvements to the Tenth Street and Egan Drive intersection and may require additional traffic capacity on the Juneau-Douglas Bridge. The two congestions points limit additional residential development on Douglas Island and impede CBJ's progress in promoting and facilitating the construction of affordable housing. The Juneau-Douglas Bridge has limited capacity for a number of reasons. A traffic circle was installed at the North Douglas Highway terminus of the Juneau-Douglas Bridge; this increased the capacity and lessened congestion from Cordova Street and southbound traffic from north of the bridge area, however, the design capacity at the Tenth Street and Egan Drive intersection continues to function at unacceptable congested Levels of Service E & F in the peak weekday morning periods. The CBJ should work with ADOT&PF to upgrade the Tenth Street and Egan Drive intersection as a top priority.*

Guideline 1 above discusses the provision of additional residential development in the area – when development is serviced by adequate public facilities. The CBJ Roadway Classification Map identifies North Douglas Highway as a Minor Arterial roadway. This lot is zoned D15, which is considered medium density and meets Guideline 1.

As discussed above, the intersection of North Douglas highway and the roundabout is currently operating at an E grade LOS for the AM and D grade LOS for the PM peak hours according to a TIA completed in 2009 (Attachment E). For this reason, the proposed rezone from D15 to GC would not be in general conformity with guideline one for Subarea 9.

Chapter 8 of the Comprehensive Plan also speaks to traffic and identifies transportation related issues, which include:

1. *Key roadway intersections and bridge capacities are overburdened and inadequate to support increased development in the Mendenhall Valley and on Douglas Island. The signalized intersection of Egan Drive and Mendenhall Loop Road experiences the lowest and most congested Level of Service (LOS F) in the peak morning commute period (2003 ADOT&PF data) and 16 non-signalized intersections experience unacceptable levels of service (LOS D or worse) in the Mendenhall Valley, Glacier Highway and Egan Drive Corridors. Traffic congestion at Tenth Street and Egan Drive is at a LOS E and F during the peak morning commute period and Cordova Street and Douglas Highway is at LOS F in the peak morning period.* ***Motorists in areas with LOS D, E, or F experience significant delays in their commute times; those neighborhoods cannot accommodate additional peak hour single-occupancy vehicle traffic related to increased development without noticeable decreased livability and quality of life.*** *In those areas, staggered work hours for downtown workers, roadway and intersection improvements, and transit improvements are needed and should be analyzed, budgeted and included within the ADOT&PF Needs List for subsequent listing in the State Transportation Improvement Program (STIP) as soon as possible to await their turn in the STIP funding cycle. (Emphasis added)*

2013 COMPREHENSIVE PLAN - The proposed rezone to GC is not in compliance with the 2013 Comprehensive Plan; staff recommendation of D15(T)LC could be in conformance with access improvements and a Land Use Map amendment.			
Chapter	**Page No.**	**Item**	**Summary**
3	19	Policy 3.1	*TO BALANCE AVAILABILITY OF SUFFICIENT LAND WITHIN THE DESIGNATED URBAN SERVICE AREA BOUNDARY THAT IS SUITABLY LOCATED AND PROVIDED WITH THE APPROPRIATE PUBLIC SERVICES AND FACILITIES TO MEET THE COMMUNITY'S FUTURE GROWTH NEEDS AND THE PROTECTION OF NATURAL RESOURCES, FISH AND WILDLIFE HABITAT AND SCENIC CORRIDORS.*

2013 COMPREHENSIVE PLAN - The proposed rezone to GC is not in compliance with the 2013 Comprehensive Plan; staff recommendation of D15(T)LC could be in conformance with access improvements and a Land Use Map amendment.			
4	37	Policy 4.2	*TO FACILITATE THE PROVISION OF AN ADEQUATE SUPPLY OF VARIOUS HOUSING TYPES AND SIZES TO ACCOMMODATE PRESENT AND FUTURE HOUSING NEEDS FOR ALL ECONOMIC GROUPS.*
4	37	Policy 4.2 – SOP1	*Designate on the Comprehensive Plan Land Use Maps adequate sites and supporting infrastructure within the Urban Service Area Boundary to accommodate a diversity of housing types, size, price, and types of neighborhood scale and character to satisfy the desires of all residents.*
4	38	Policy 4.3	*TO DESIGNATE ON LAND USE MAPS AN ADEQUATE SUPPLY OF BUILDABLE LAND WITHIN THE URBAN SERVICE AREA, AND PARTICULARLY ALONG TRANSIT CORRIDORS, FOR RESIDENTIAL USE AT DENSITIES THAT CAN PRODUCE HOUSING AFFORDABLE TO ALL ECONOMIC GROUPS.*
4	41	Policy 4.8	*TO BALANCE THE PROTECTION AND PRESERVATION OF THE CHARACTER AND QUALITY OF LIFE OF EXISTING NEIGHBORHOODS WITHIN THE URBAN SERVICE AREA WHILE PROVIDING OPPORTUNITIES FOR A MIXTURE OF NEW HOUSING TYPES.*
8	114	Policy 8.6 DG3	*Require sidewalks and bicycle paths along roadways where higher-density housing is to be provided as a condition of a rezoning application for higher densities*
8	114	Policy 8.6 IA2	*Work with the Alaska Department of Transportation and Public Facilities (ADOT&PF) to construct sidewalks and/or separated paths. If these are not practical, a wide shoulder of at least 48" along roads that lack such improvements, with a priority given to those corridors which have Average Annual Daily Traffic (AADT) of 4,000 vehicles or more. According to ADOT&PF 2010 data, these corridors are:* • *North Douglas Highway – Juneau Douglas Bridge to Eagle Creek – 5,508 AADT*
10	131	Policy 10.3	*10.3. TO FACILITATE RESIDENTIAL DEVELOPMENTS OF VARIOUS TYPES AND DENSITIES THAT ARE APPROPRIATELY LOCATED IN RELATION TO SITE CONDITIONS, SURROUNDING LAND USES, AND CAPACITY OF PUBLIC FACILITIES AND TRANSPORTATION SYSTEMS AFFORDABLE TO ALL ECONOMIC GROUPS.*
10	132	Policy 10.4	*POLICY 10.4. TO MINIMIZE CONFLICTS BETWEEN RESIDENTIAL AREAS AND NEARBY RECREATIONAL, COMMERCIAL, OR INDUSTRIAL USES THAT WOULD GENERATE ADVERSE IMPACTS TO EXISTING RESIDENTIAL AREAS THROUGH APPROPRIATE LAND USE LOCATIONAL DECISIONS AND REGULATORY MEASURES.*
10	132	Policy 10.4 – IA1	*Seek to reduce or eliminate conflicts between medium or high density residential uses in established low density residential neighborhoods by encouraging the design of higher density housing to be compatible in scale, massing and orientation with*

2013 COMPREHENSIVE PLAN - The proposed rezone to GC is not in compliance with the 2013 Comprehensive Plan; staff recommendation of D15(T)LC could be in conformance with access improvements and a Land Use Map amendment.			
			the adjacent, lower-density housing and to hide or screen the parking behind or within the structure(s).

The above listed policies of the Comprehensive Plan acknowledge the need for additional housing in Juneau, while balancing the need for adequate public infrastructure, including roads, water, and sewer. Additionally, the Plan identifies a need to facilitate varying densities while resolving conflicts between single-family neighborhoods and other types of development. The proposed rezone request to GC would also allow commercial development for which there may not be adequate public infrastructure, especially in regards to traffic and access. Staff finds the following aspects of the rezone request are not consistent with the CBJ Comprehensive Plan:

- The lot being reviewed presently lacks sufficient transportation infrastructure to accommodate higher residential densities or more intensive commercial development.
- Does not reduce or eliminate conflict between commercial development or medium/high density residential uses in an area where the built density is low.
- North Douglas Highway lacks sidewalks and bike lanes that are important for providing access to commercial or medium/high density residential development.

If additional public infrastructure is provided to the lot and surrounding area, LC zoning would be appropriate according to the Comprehensive Plan Policies *with a Land Use Designation amendment*. Examples of this additional public infrastructure may include the Douglas Bench Road, a second crossing in North Douglas, or improvements to the Douglas roundabout and the 10th and Egan intersection. The purpose of this infrastructure is to ensure that any additional higher density development would improve, and not aggravate, existing issues with traffic flow and pedestrian safety.

GC zoning would not be appropriate based on the MDR Land Use Designation. Based on the analysis herein, staff recommends the Planning Commission create a transition zone, which would allow the lot to be upgraded to LC when additional public infrastructure is provided. The LC zoning would create an appropriate transition from the GC zone to the north and the lower density residential zones that surrounds the lot to the west and south.

AGENCY REVIEW

CDD conducted an agency review comment period between 02/16/2021 – 03/20/2021. Agency review comments can be found in Attachment F.

Agency	**Summary**
CBJ Streets	No comments at this time.
CBJ Assessor	No comments received as of the writing of this report.
Alaska Department of Transportation	*Traffic & Safety - The denser 50 du/acre may trigger the requirement for a traffic impact analysis. These are required when a proposed development is expected to generate over 100 trips in a peak hour.* *Planning – Planning concurs with traffic/safety that a TIA may be required and which may result in some necessary mitigating action. We have concerns about the ability of North Douglas Highway and the bridge to handle the additional traffic. As well, high density development without any sidewalks could prove problematic.*

Agency	Summary
	That all said, the TIA is the appropriate process to move forward with analysis of impacts. *ROW – No objection to the rezone request. We require submission of a driveway/approach road application for any changes in zoning designation or plans to create access onto state travel ways. As such, TDLH, LLC must submit an application for an approach road within Permits for our review and adjudication.* *ROW would most likely not approve an easement request. However the applicant may also consider applying for an Encroachment Permit or Right of Way Use Agreement to fill additional needs. An encroachment would be assessed economic rent and any use agreement would be thoroughly reviewed by our DOT&PF department review team. The application must comply with all federal, state, and local statutes or regulations.* *It is best to reach out to ROW during the approach road planning stage before applying for a permit. This way we may assist in steering the applicant away from impermissible designs. It would also be prudent to consult with DOT Traffic & Safety during this time.*
General Engineering	GE has no issues nor comments regarding this permit.
Building	No issues with this project at this time.
Capital City Fire/Rescue	No comments received as of the writing of this report.

PUBLIC COMMENTS

CDD conducted a public comment period between 03/11/2021 – 04/12/2021; CDD staff held a neighborhood meeting on 03/11/2021. Public notice was mailed to property owners within 500 feet of the proposed rezone. A public notice sign was also posted on-site two weeks prior to the scheduled hearing (Attachment B). Full public comments submitted at time of writing this staff report can be found in Attachment G.

Name	Summary
Margo Waring	Concerns: Limited road frontage on a low-visibility curve, with longer turn times for larger vehicles. Encourage sharing an easement with a neighboring lot. Encourage requiring an easement for the bench road. Prohibit mining and similar extraction that will cause large vehicle traffic.

ZONE CHANGE OPTIONS AND ALTERNATIVES

As stated in CBJ 49.75.130(a), the Commission may recommend approval, approval with modifications or denial of a rezone request. The Commission may recommend approval to the Assembly for different zoning districts than what is requested by the applicant or recommended by staff. Additionally, the Commission can recommend modifications to the boundaries of the area to be rezoned. This means that if the Commission wishes to do so, the zoning district boundary line may be moved from its current location, as long as it is found to be in substantial conformance with the Comprehensive Plan and Title 49 – Land Use Code. Zoning district boundary lines are intended to follow property lines, centerlines of streets, alleys, streams (CBJ 49.25.110(f)).

Staff analysis includes the LC zoning district as an alternative to the applicant's request. Staff recommends the Planning Commission recommend the lot be rezoned from D15 to D15(T)LC with a Land Use Map amendment from MDR to HDR.

FINDINGS

In accordance with CBJ 49.75 the Director makes the following findings on the proposed rezone from D15 to GC zoning:

1. ***Was the rezone application filed timely in accordance with CBJ 49.75.110?***

   Analysis: No additional analysis required.

   Finding: Yes. The rezone application was filed in January 2021.

2. ***Was adequate public notice provided in accordance with CBJ 49.75.110?***

   Analysis: CDD staff held a public meeting on 03/11/2021, and mailed written notice to property owners within 500 feet of the proposed rezone. A public notice sign was posted on the site two weeks prior to the scheduled hearing.

   Finding: Yes. Adequate public notice was provided in accordance with CBJ 49.75.110.

3. ***Is this request for an area covering more than two acres or an expansion of an existing zoning district as required by CBJ 49.75.120?***

   Analysis: The rezone request is for 15.41 acres.

   Finding: Yes. The proposed rezone meets the minimum area required by CBJ 49.75.120.

4. ***Has no similar request been made within the previous 12 months as required by CBJ 49.75.120?***

   Analysis: No additional analysis required.

   Finding: Yes. No similar rezone request has been filed within the previous 12 months for any of the rezone options.

5. ***Is the proposed zoning district and the uses allowed therein found to be in substantial conformance with the land use maps of the comprehensive plan and policies of the comprehensive plan, in accordance with CBJ 49.75.120?***

   Analysis: The rezone request from D15 to GC is not in substantial conformance with the land use maps of the comprehensive plan and policies of the comprehensive plan, in accordance with CBJ 49.75.120. GC zoning is not in conformance with the MDR Land Use Map Designation. MDR provides for 5 to 20 DU/acre; GC zoning allows for up to 50 DU/acre.

   Finding: No. The proposed rezone is not in substantial conformance with the land use maps and policies of the comprehensive plan.

6. Is the proposed zoning district and the uses allowed therein found to be in substantial conformance with Title 49 – Land Use Code, in accordance with CBJ 49.75.120?

Analysis: CBJ 49.75.120 Restrictions on rezonings, states:

> *Rezoning requests covering less than two acres shall not be considered unless the rezoning constitutes an expansion of an existing zone. Rezoning requests which are substantially the same as a rezoning request rejected within the previous 12 months shall not be considered. A rezoning shall only be approved upon a finding that the proposed zoning district and the uses allowed therein are in* ***substantial conformance with the land use maps*** *of the comprehensive plan*. (emphasis added)

The proposed rezone from D15 to GC is not in substantial conformance with Title 49 Land Use Code. As stated above, the MDR Land Use Map Designation supports density of 5 to 20 DU/acre; GC exceeds this density allowing for up 50 DU / acre.

Finding: No. The proposed rezone is not in substantial conformance with Title 49 – Land Use Code.

RECOMMENDATION

Staff recommends the Planning Commission ADOPT the Director's analysis and findings and forward a recommendation of APPROVAL to the Assembly for a rezone from D15 to D15(T)LC.

The approval for completion of the transition zone subject to the following condition:

1. Prior to upgrading the zoning from D15 to LC, additional public infrastructure must be constructed. This may include the Douglas Bench Road, a second crossing in North Douglas, or improvements to the Douglas roundabout and the 10th and Egan intersection. The purpose of this infrastructure is to ensure that any additional higher density development would improve, and not aggravate, existing issues with traffic flow and pedestrian safety.
2. Prior to upgrading the zoning from D15 to LC, a Comprehensive Land Use Designation Map amendment is required from MDR to HDR.

STAFF REPORT ATTACHMENTS

Item	Description
Attachment A	Application Packet
Attachment B	Abutters Notice and Public Notice Sign Photo
Attachment C	Permissible Use Comparison Table
Attachment D	Comp Plan Map
Attachment E	2009 Traffic Impact Analysis – North Douglas Highway and roundabout
Attachment F	Agency Comments
Attachment G	Public Comments
Attachment H	Additional Materials

CITY AND BOROUGH OF JUNEAU
ALASKA'S CAPITAL CITY
COMMUNITY DEVELOPMENT

DEVELOPMENT PERMIT APPLICATION

NOTE: Development Permit Application forms must accompany all other Community Development Department land use applications.

To be completed by Applicant

PROPERTY LOCATION

Physical Address
0 North Douglas Highway

Legal Description(s) (Subdivision, Survey, Block, Tract, Lot)
Channel View Lot 1

Parcel Number(s)
6D0601150011

☐ This property located in the downtown historic district
☐ This property located in a mapped hazard area, if so, which _____

LANDOWNER/ LESSEE

Property Owner	Contact Person
TDLH, LLC	Travis Arndt

Mailing Address	Phone Number(s)
10840 Lilac Drive, Juneau, AK 99801	907-321-3118
E-mail Address: constellation_dev@hotmail.com	

LANDOWNER/ LESSEE CONSENT Required for Planning Permits, not needed on Building/ Engineering Permits

I am (we are) the owner(s)or lessee(s) of the property subject to this application and I (we) consent as follows:

A. This application for a land use or activity review for development on my (our) property is made with my complete understanding and permission.
B. I (we) grant permission for officials and employees of the City and Borough of Juneau to inspect my property as needed for purposes of this application.

X Travis Arndt — Landowner/Lessee Signature — Date: 1/5/2021

X _____ — Landowner/Lessee Signature — Date: _____

NOTICE: The City and Borough of Juneau staff may need access to the subject property during regular business hours and will attempt to contact the landowner in addition to the formal consent given above. Further, members of the Planning Commission may visit the property before the scheduled public hearing date.

APPLICANT If the same as OWNER, write "SAME"

Applicant	Contact Person
SAME	

Mailing Address	Phone Number(s)
E-mail Address	

X Travis Arndt — Applicant's Signature — Date of Application: 1/24/21

----------DEPARTMENT USE ONLY BELOW THIS LINE----------

RECEIVED
JAN 25 2021
Permit Center/CDD

This form and all documents associated with it are public record once submitted.

INCOMPLETE APPLICATIONS WILL NOT BE ACCEPTED

For assistance filling out this form, contact the Permit Center at 586-0770.

Intake Initials	
JPM	
Case Number	Date Received
AME 21-001	1/25/21

CITY AND BOROUGH OF JUNEAU
ALASKA'S CAPITAL CITY
COMMUNITY DEVELOPMENT

ZONE CHANGE APPLICATION

See reverse side for more information regarding the permitting process and the materials required for a complete application.

NOTE: Must be accompanied by a DEVELOPMENT PERMIT APPLICATION form.

To be completed by Applicant

PROJECT SUMMARY
Rezone Channel View Lot 1

IS THIS AN EXPANSION OF AN EXISTING ZONE? (●) Yes ( ) No

Total Land Area of Proposed Change 15.41 acres

Comprehensive Plan Land Use Designation MDR adjoining C

Current Zone(s) D15

Comprehensive Plan Map Letter L

New Zone Requested GC, GC/LC, or LC

TYPE OF ZONE CHANGE REQUESTED (●) Regular ( ) Transition

Has this or a similar zone change been requested in the previous 12 months? ( ) Yes Case # _____ (●) No

UTILITIES AVAILABLE **WATER:** [✔] Public [ ] On Site **SEWER:** [✔] Public [ ] On Site

ALL REQUIRED MATERIALS ATTACHED

- [✔] **Complete application**
- [✔] **Pre-Application Conference notes**
- [✔] **Narrative including:**
  - [✔] Purpose of the requested zone change
  - [✔] Any potential impacts to public infrastructure (streets, water, & sewer)
  - [✔] How the requested zone change comply with the maps and policies of the Comprehensive Plan
- [✔] **Site Plan and/or map of proposed zone change** (details on reverse side)

----------DEPARTMENT USE ONLY BELOW THIS LINE----------

ZONE CHANGE FEES	Fees	Check No.	Receipt	Date
Application Fees	$ 600.00	49.85.100 (9)		
Admin. of Guarantee	$			
Adjustment	$			
Pub. Not. Sign Fee	$ 50.00			
Pub. Not. Sign Deposit	$ 100.00			
Total Fee	$			

This form and all documents associated with it are public record once submitted.

INCOMPLETE APPLICATIONS WILL NOT BE ACCEPTED

For assistance filling out this form, contact the Permit Center at 586-0770.

Case Number	Date Received
AME 21-001	1/25/21

Zone Change Application Information

Zone changes are outlined in CBJ 49.75 article I

Pre-Application Conference: A pre-application conference is encouraged prior to submitting an application. The applicant shall meet with City & Borough of Juneau (CBJ) staff to discuss the Zone Change process and analysis. To schedule a pre-application conference, please contact the Permit Center at 586-0770 or via email at Permits@juneau.org.

Application: An application for a Zone Change will not be accepted by the CBJ until it is determined to be complete. **Zone Change may only be applied for during January and July.** The items needed for a complete application are:

1. **Forms:** Completed Zone Change Application and Development Permit Application.
2. **Fees:** The fee for Zone Change Application is $600.00. No work can be approved with a Zone Change. All fees are subject to change.
3. **Project Narrative:** A detailed narrative describing the purpose for the requested zone change.
4. **Plans:** A site plan showing the following information:
   A. The boundaries of the existing and proposed zone change and proposed buffers;
   B. The location of existing structures (i.e. buildings, fences, signs, parking areas, etc.); and
   C. The location of existing physical features of the site (i.e. drainage, topography, eagle trees, hazard areas, salmon streams, wetlands, etc.).
5. A traffic study may be required for zone changes.

Document Format: All materials submitted as part of an application shall be submitted in either of the following formats:

1. Electronic copies in the following formats: .doc, .txt, .xls, .bmp, .pdf, .jpg, .gif, .xlm, .rtf (other formats may be preapproved by the Community Development Department).
2. Paper copies 11" X 17" or smaller (larger paper size may be preapproved by the Community Development Department).

Application Review & Hearing Procedure: Once the application is determined to be complete, the Community Development Department will initiate the review and scheduling of the application. This process includes:

Review: The Community Development Department will evaluate the application for consistency with all applicable City & Borough of Juneau codes and adopted plans. Depending on unique characteristics of the Zone Change request, the application may be required to be reviewed by other municipal boards and committees. During this review period, the Community Development Department will coordinate the review of this application by other agencies, as necessary. **Review comments may require the applicant to provide additional information, clarification, or submit modifications/ alterations for the proposed Zone Change.**

Hearing: Once an application has been reviewed by all applicable parties the Community Development Department will schedule the zone change for the next appropriate Planning Commission meeting. All Zone Change Applications will be reviewed by the Planning Commission who will send a recommendation to the Assembly. Following a recommendation of approval by the Planning Commission, the Community Development Department will coordinate the zone change review by the Assembly. In order for zone changes to become effective, they must be adopted by ordinance by the CBJ Assembly.

Public Notice Responsibilities: All Zone Change requests must be given the following public notice as outlined in CBJ 49.15.230:

Community Development Department: Will give notice of the pending Planning Commission meeting and its agenda in the local newspaper a minimum of 10-days prior to the meeting. Furthermore, the department will mail notices to all property owners within 500-feet of the project site.

The Applicant will post a sign on the site at least 14 days prior to the meeting. The sign shall be visible from a public right-of-way or where determined appropriate by CDD. Signs may be produced by the Community Development Department for a preparation fee of $50, and a $100 deposit that will be refunded in full if the sign is returned within seven days of the scheduled hearing date. If the sign is returned between eight and 14 days of the scheduled hearing $50 may be refunded. The Applicant may make and erect their own sign. Please contact the Community Development Department for more information.

INCOMPLETE APPLICATIONS WILL NOT BE ACCEPTED

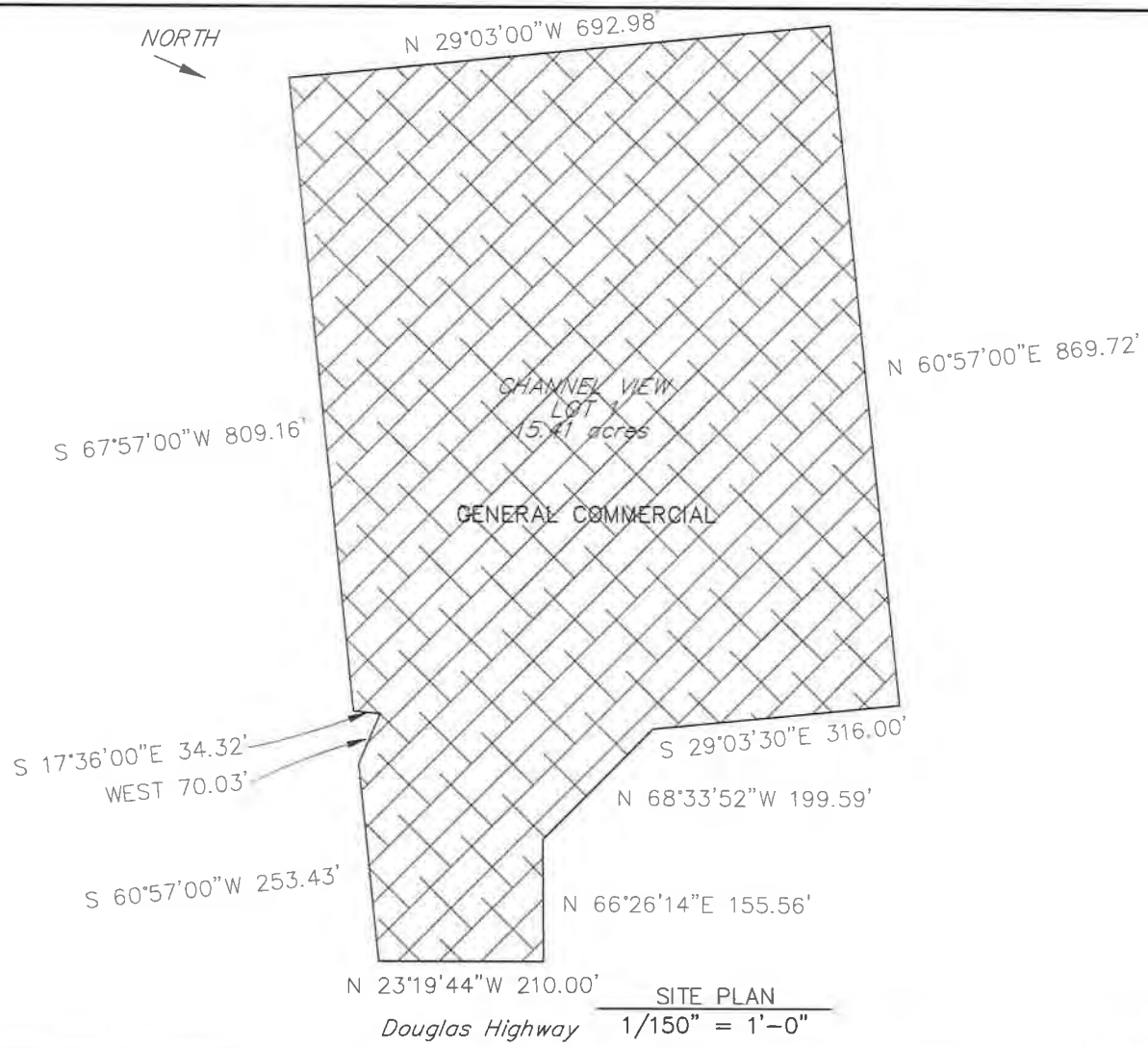

SITE PLAN
1/150" = 1'-0"

NOTES:
- REZONE ENTIRE LOT AS GC

CONSTELLATION DEVELOPMENT

10640 Glacier Drive
Juneau, AK 99801
907-321-3118

Lot 1

Channel View Subdiv.

SITE PLAN - Alt. A

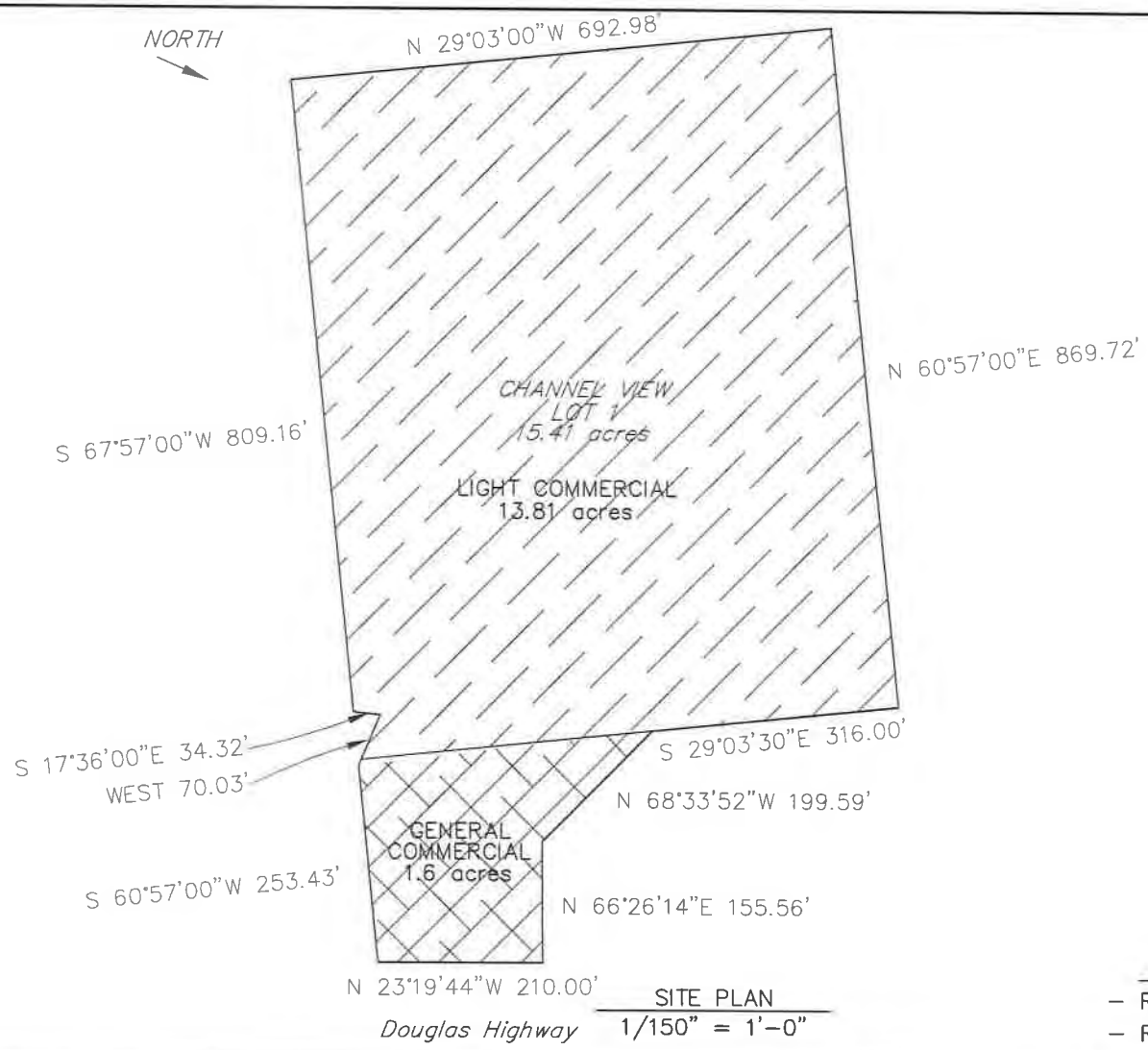

SITE PLAN
1/150" = 1'-0"

NOTES:
- REZONE FRONT 1.6 acres AS GC
- REZONE REAR 13.81 acres AS LC

CONSTELLATION DEVELOPMENT

10640 Lilac Drive
Juneau, AK 99801
907-321-3118

Lot 1

Channel View Subdiv.

SITE PLAN – Alt. B

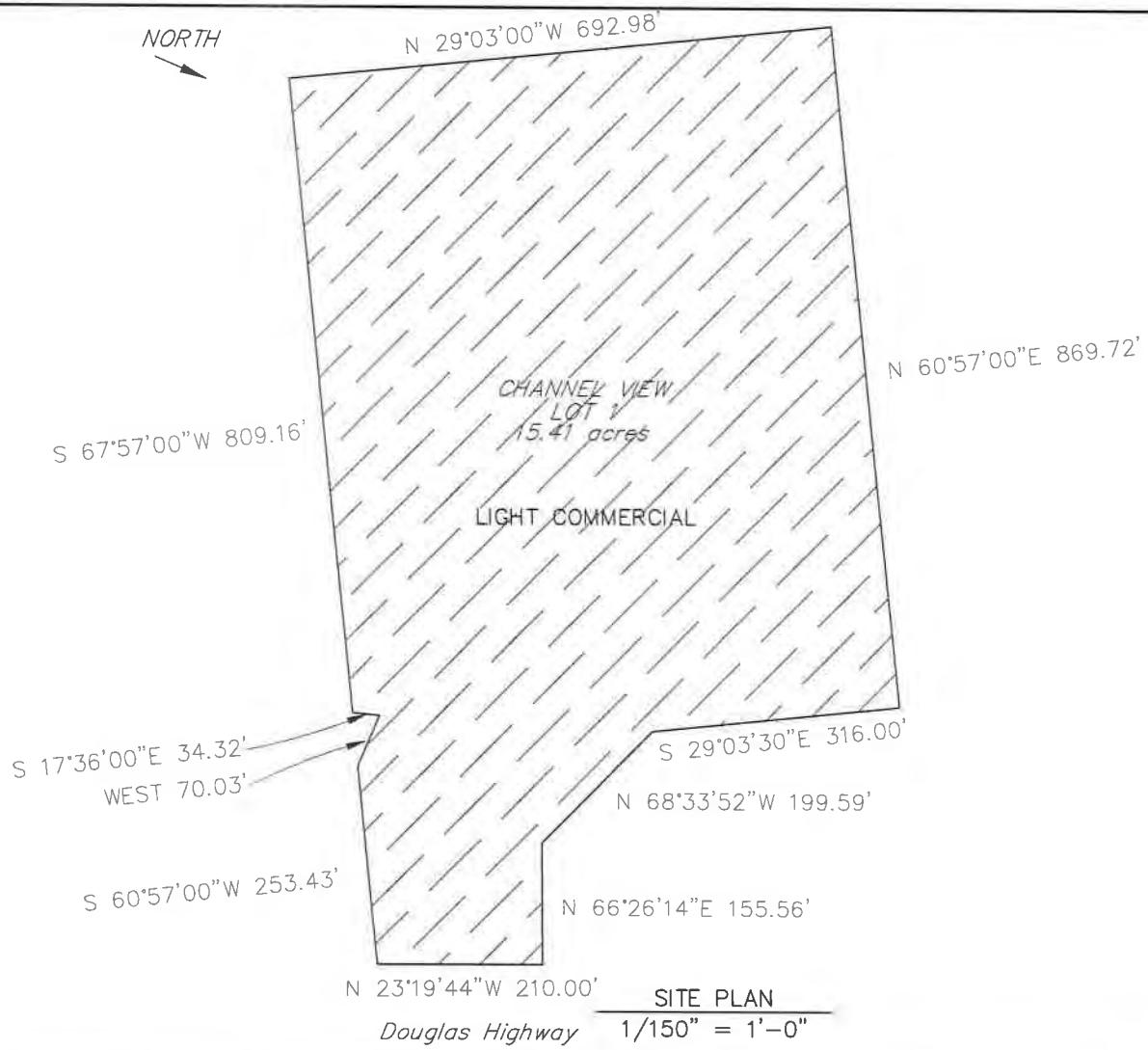

SITE PLAN
1/150" = 1'-0"

NOTES:
- REZONE ENTIRE LOT AS LC

CONSTELLATION DEVELOPMENT

10840 Lilac Drive
Juneau, AK 99801
907-321-3118

Lot 1

Channel View Subdiv.

SITE PLAN – Alt. C

Parcel #: 6D0601150011
Legal Description: Channel View Subdivision Lot 1
Size: 15.41 Acres
Current Zoning: D15
Desired Zoning: GC, GC with LC, or LC

We desire to have our lot rezoned preferably to General Commercial - Alternate A, if not then a combination of General Commercial (GC) in front with Light Commercial in the rear - Alternate B, else Light Commercial (LC) - Alternate C.

The Comprehensive Plan designates our lot as MDR. Our lot also abuts an area with a C designation. Further, the abutting lot with the commercial designation was formally part of what is our lot. That subdivided portion of the lot is designated MDR and C and zoned entirely General Commercial (GC). The area designations within the Comprehensive Plan are intended to be painted with a wide brush across areas as opposed as to granularly along lot lines. There are no natural or man-made features that would create logical barriers to extending the zoning to our location. Thus, the continuation of the C designation to include our lot would be an appropriate interpretation of the Comprehensive Plan areas. The use of a wide brush for interpretation of abutting areas within the Comprehensive Plan has been previously demonstrated applicable. Further, investigation of lots within the immediate area shows lots within the MDR designation that have been zoned Commercial (Rear half of Parcel 6D0601150012) and Waterfront Commercial (Parcels 6D0701000041, 6D0701000042, 6D0701000043, 6D0701000044) without changing the comprehensive plan designation. Thus, you have to look no further than our neighbors for approved existing examples of what I am asking for and that the rezone request is within substantial conformance with the land use maps of the comprehensive plan.

The lot is served by public water and sewer service (located within the urban service area boundary - USAB). The comprehensive plan suggests efficiently developing land within the USAB to medium to high density affordable housing or mixed residential and commercial developments wherever possible and practicable. Rezoning our lot would allow us to create a mixed-use development combining residential (medium to high density) with less intrusive commercial uses as well. The Comprehensive Plan encourages creating mixed use communities located on the USAB with higher densities of 30-80 units per acre. General Commercial provides for 50 units per acre, while Light Commercial provides for the minimum suggested density of 30 units per acre. Neither zoning district provides for the Comprehensive Plan's upper end of mixed-use community density. Our desire for rezoning is tied to use rather than density. We would like to have the ability to include other compatible uses on the property, one of which are large garages without apartments (commonly called "Boat Condos").

Setbacks are commonly of interest. Looking at the Table of Dimensional Standards, GC has reduced setbacks as compared with the existing D15 zoning. However, since the lot abuts a different zoning district, the more conservative setback would apply. The setbacks along the lot

lines zoned D15 would remain the same as they are with our current zoning. Therefore, rezoning to GC would not worsen the situation.

Building a mixed-use community would provide for a mix of uses to create affordability and livability within the development. It will allow for a balance of density of residential units and a select few other compatible uses. Thus, rezoning would provide an avenue such that the area is not overwhelmingly dominated with a single use.

Historically, our goal has been to create workforce housing. Here too, our goal would be to create a livable, affordable workforce housing development with varying amenities for the residents and its neighbors. Rezoning the lot will help us to achieve this goal and fill a need outlined in the Comprehensive Plan.

CITY AND BOROUGH OF JUNEAU
ALASKA'S CAPITAL CITY

Assessor's Database

Current Owner

TDLH LLC
10840 LILAC DR, JUNEAU AK 99801

Parcel #: 6D0601150011 (Map)	**Address:** 0 N DOUGLAS HWY	**Legal Desc. 1:** CHANNEL VIEW LT 1	**Legal Desc. 2:**
Prev. Owner: CONSTELLATION DEVELO	**Site Value:** $304900.00	**Building PV:** $0.00	**Total PV:** $304900.00
Use Code: Vacant	**Exempt:** No Data	**Zoning:** -Multi-Family-5,000 sq.ft. minimum lot size -15 units per acre	**Tax Year:** 2020
No. of Units: 000	**Year Built:** 0		**Gross Liv. Area:** 000000 sqft
Garage: No	**Garage Area:** 000000	**Lot Size:** 15.41	**Last Trans:** 20190523
City Water: Yes	**City Sewer:** No		
Exempt Land: 0	**Exempt Building:** 0	**Exempt Total:** 0	**Road/No Road:** Roaded

Search the Database

Search the database using the search box below. The field accepts any search parameter (owner's name, address, parcel number, year built, etc.).

CITY AND BOROUGH OF JUNEAU
ALASKA'S CAPITAL CITY
COMMUNITY DEVELOPMENT

(907) 586-0715
CDD_Admin@juneau.org
www.juneau.org/CDD
155 S. Seward Street • Juneau, AK 99801

Channel View Lot 1 Rezone

Case Number: PAC2020 0069

Applicant: Travis Arndt

Property Owner: TDLH LLC

Property Address: Not assigned

Parcel Code Number: 6D0601150011

Site Size: 671,260 Square Feet (15.41 acres)

Zoning: D15 Residential

Existing Land Use: Vacant

Conference Date:	December 23, 2020
Report Issued:	December 24, 2020

List of Attendees

Note: Copies of the Pre-Application Conference Report will be emailed, instead of mailed, to participants who have provided their email address below.

Name	Title	Email address
Travis Arndt	Applicant	constellation_dev@hotmail.com
Laurel Christian Irene Gallion	Planning	Laurel.Christian@juneau.org Irene.Gallion@juneau.org
Kyle Paw	General Engineering	Kyle.paw@juneau.org

Conference Summary

Questions/issues/agreements identified at the conference that weren't identified in the attached reports. The following is a list of issues, comments and proposed actions, and requested technical submittal items that were discussed at the pre-application conference.

Planning Division

1. **Zoning** – Zoning districts defined:
   a. **D15**: *The D-10 and D-15, residential districts, are intended to accommodate primarily multifamily residential development at ten and 15 units per acre respectively. These are relatively low-density multifamily districts.*
   b. **Light Commercial (LC)**: *The LC, light commercial district, is intended to accommodate commercial development that is less intensive than that permitted in the general commercial district. Light commercial districts are primarily located adjacent to existing residential areas. Although many of the uses allowed in this district are also allowed in the GC, general commercial district, they are listed as conditional uses in this district and therefore require commission review to determine compatibility with surrounding land uses. A lower level of intensity of development is also achieved by stringent height and setback restrictions. Residential development is allowed in mixed- and single-use developments in the light commercial district.*
   c. **General Commercial (GC)**: *The GC, general commercial district, is intended to accommodate most commercial uses. Commercial activities are permitted outright in the zone except for those few uses that are listed as conditional uses to ensure compatibility. Residential development is allowed in mixed- and single-use developments in the general commercial district.*

2. **CBJ 49.25.400 Dimensional Standards**

Standard		D15	LC	GC
Lot	Size	5,000 sq. ft.	2,000	2,000
	Width	50'	20'	20'
	Depth	80'	80'	60'
Setbacks*	Front	20'	25'	10'
	Rear	15'	10'	10'
	Side	5'	10'	10'
	Street Side	13'	17'	10'
Lot Coverage		50%	No maximum	No maximum
Height	Permissible	35'	45'	55'
	Accessory	25'	35'	45'

***Where one zoning district abuts another, the greater of the required setbacks would apply.**

3. **CBJ 49.25.500 Density**

	D15 (15 DU/Acre)	LC (30 DU/Acre)	GC (50 DU/Acre)
Maximum Number of Dwelling Units	231	462	770

4. **Access –** Lot has access and frontage on North Douglas Highway; per Plat 98-04 access is restricted to the access easement shared with adjoining lot 2 unless another access is approved by CBJ and ADOT&PF.

a. North Douglas Highway is classified as a Minor Arterial per the CBJ adopted roadway classification maps. If subdivision of the lot occurs, CBJ 49.35.210(c) applies.

5. **Flood** – Not in a mapped flood zone.
6. **Hazard/Mass Wasting/Avalanche/Hillside Endorsement** – Lot contains some slopes in excess of 18%; a hillside endorsement may be required at time of development.
7. **Wetlands** – Wetlands may exist on the lot; check with ACOE for required development permits.
8. **Habitat** – (Eagle – remind applicant to check with Feds; Riparian, etc.) – Check with the U.S. Fish and Wildlife on the presence of eagle nests in the area. The presence of eagle nests may impact construction scheduling. No anadromous waterbodies are on the subject parcel, or within 50 feet.
9. **Plat or Covenant Restrictions** – Plat 98-04:

NOTES:

1. ACCESS TO THE SUBDIVISION SHALL BE BY COMMON DRIVEWAY UNLESS OTHERWISE APPROVED BY THE CITY AND BOROUGH OF JUNEAU AND ALASKA DEPARTMENT OF TRANSPORTATION AND PUBLIC FACILITIES. CONSTRUCTION OF A NEW DRIVEWAY AND MINIMUM PARKING AREA MAY BE REQUIRED UPON FURTHER DEVELOPMENT IN THIS SUBDIVISION IN ACCORDANCE WITH CBJ 49.40.138 AND ADOT&PF STANDARDS.
2. THE OWNER/DEVELOPER SHALL OBTAIN PERMITS FROM THE CORPS OF ENGINEERS AND OTHER AGENCIES, AS REQUIRED, PRIOR TO FURTHER DEVELOPMENT OF THE PROPERTY, OR OTHERWISE AFFECTING WETLANDS.
3. EXISTING VEGETATION SHALL BE RETAINED ALONG THE HIGHWAY, OR BERMS AND PLANTING STRIPS SHALL BE PLACED ALONG THE HIGHWAY WHERE FEASIBLE AND PRUDENT, IN ACCORDANCE WITH CBJ 49.70 ARTICLE IX (JUNEAU COASTAL MANAGEMENT PROGRAM). THE OWNER/DEVELOPER MAY PROPOSE TO RETAIN EXISTING VEGETATION OR TO PLACE BERMS AND PLANTING STRIPS; SUCH PROPOSALS SHALL BE SUBJECT TO REVIEW AND APPROVAL IN ACCORDANCE WITH CBJ 49.70 AND OTHER SITE-DEVELOPMENT REQUIREMENTS OF THE CBJ LAND USE CODE AND COMMUNITY DEVELOPMENT REGULATIONS.

a.

10. **Traffic** – Traffic will be reviewed with a development proposal.
11. **Nonconforming situations** – No known; lot is vacant.
12. **Rezone Process –**

a. A rezone request must be submitted in January or July.

b. The rezone request must be at least two acres or an expansion of an existing zone.

c. The applicant should submit the metes and bounds of the area they are requesting to rezone to each designation, if multiple designations are requested.

d. The Planning Commission must find: *"the proposed zoning district and the uses allowed therein are in substantial conformance with the land use maps of the comprehensive plan"*.

e. Land Use Designation – *Medium Density Residential (MDR): These lands are characterized by urban residential lands for multifamily dwelling units at densities ranging from 5 to 20 units per acre. Any commercial development should be of a scale consistent with a residential neighborhood, as regulated in the Table of Permissible Uses (CBJ 49.25.300).*

f. Review Subarea 8 guidelines and policies as well as overall goals and policies of the Comprehensive Plan.

g. If the Planning commission supports the rezone, a Notice of Recommendation is forwarded to the Assembly for a final decision [49.75.130(a)].

h. If the Planning Commission denies the rezone, a Notice of Decision is issued to the applicant. The applicant may file a protest within 20 days of the date of the decision. If a protest is filed timely, the Assembly will review the rezone request [49.75.130(b)].

Other Applicable Agency Review

13. ADOT&PF may be consulted through review of the rezone request.

List of required applications

Based upon the information submitted for pre-application review, the following list of applications must be submitted in order for the project to receive a thorough and speedy review. Application can be found on the CDD website: https://juneau.org/community-development/documents?SF=13&SV=%23application

1. Development Permit Application
2. Zone Change Application

Additional Submittal Requirements

Submittal of additional information, given the specifics of the development proposal and site, are listed below. These items will be required in order for the application to be determined Counter Complete.

1. A copy of this pre-application conference report.
2. Narrative describing how the rezone request complies with the Land Use Designation Maps of the Comprehensive Plan, subarea guidelines, and policies from the plan.
3. The metes and bounds of the area they are requesting to rezone to each designation, if more than one designation is requested.
4. Map showing zone change request.

Exceptions to Submittal Requirements

Submittal requirements staff has determined **not** to be applicable or **not** required, given the specifics of the development proposal, are listed below. These items will **not** be required in order for the application to be reviewed.

1. None

Fee Estimates

The preliminary plan review fees listed below can be found in the CBJ code section 49.85.

Based upon the project plan submitted for pre-application review, staff has attempted to provide an accurate estimate for the permits and permit fees which will be triggered by your proposal.

1. Rezone application fee - $600.00
2. Public notice sign fee - $50.00 plus $100.00 refundable deposit

For informational handouts with submittal requirements for development applications, please visit our website at www.juneau.org/cdd.

Submit your Completed Application
You must submit your application(s) in person with payment made to:

City & Borough of Juneau, Permit Center
230 South Franklin Street
Fourth Floor Marine View Center
Juneau, AK 99801

Phone: (907) 586-0715
Fax: (907) 586-4529

Web: www.juneau.org/cdd
Email: Permits@juneau.org

Attachments:

49.75.130 Rezoning
Comprehensive Plan Land Use Designation Map

ARTICLE I. - REZONINGS

49.75.110 - Initiation.

A rezoning may be initiated by the director, the commission, or the assembly at any time during the year. A developer or property owner may initiate a request for rezoning in January or July only. Adequate public notice shall be provided by the director to inform the public that a rezoning has been initiated.

(Serial No. 87-49, § 2, 1987)

49.75.120 - Restrictions on rezonings.

Rezoning requests covering less than two acres shall not be considered unless the rezoning constitutes an expansion of an existing zone. Rezoning requests which are substantially the same as a rezoning request rejected within the previous 12 months shall not be considered. A rezoning shall only be approved upon a finding that the proposed zoning district and the uses allowed therein are in substantial conformance with the land use maps of the comprehensive plan.

(Serial No. 87-49, § 2, 1987; Serial No. 2012-31(b), § 2, 8-27-2012)

49.75.130 - Procedure.

A rezoning shall follow the procedure for a major development permit except for the following:

(a) The commission shall make a recommendation to the assembly to approve, approve with modifications, or deny a rezoning request. The commission shall prepare written findings in support of its recommendation. The commission's notice of recommendation shall be posted on the department's website within ten days of the public hearing on the proposed rezone. If the commission recommends approval of the rezoning request or approval with modifications, the director shall forward the commission's written recommendation to the assembly with an ordinance to amend the official zoning map in accordance with the recommendation. If the commission recommends denial, the amendment shall be deemed disapproved unless the applicant files a notice of protest in accordance with CBJ 49.75.130(b).

(b) Protests.

(1)

An applicant may protest the commission's recommendation to deny the rezoning by filing a written statement with the municipal clerk within 20 days of the commission's written notice of recommendation for denial, requesting that an ordinance amending the zoning map as set out in the application be submitted for action by the assembly. The director shall, within 30 days of the filing of the protest with the municipal clerk, prepare a draft ordinance to be appended to the notice of recommendation for consideration by the assembly.

(2) Any person may protest the commission's recommendation to approve a rezoning request or approve a rezoning request with modification by filing a written protest with the municipal clerk within 20 days of the commission's written notice of recommendation.

(3) In the case of a timely filed protest and after introduction of the proposed ordinance at a regularly scheduled assembly meeting, the assembly shall hold a public hearing on the proposed rezoning. At the close of the hearing, the assembly shall approve the zoning map amendment as recommended by the commission, approve the zoning map amendment with modifications, or deny the zoning map amendment.

(c) All rezonings shall be adopted by ordinance, and any conditions thereon shall be contained in the ordinance. Upon adoption of any such ordinance, the director shall cause the official zoning map to be amended in accordance with the adopted ordinance.

(Serial No. 87-49, § 2, 1987; Serial No. 2012-11, § 2, 4-2-2012 ; Serial No. 2014-14(c)am , § 2, 4-6-2015, eff. 5-7-2015; Serial No. 2015-03(c)(am), § 57, 8-31-2015)

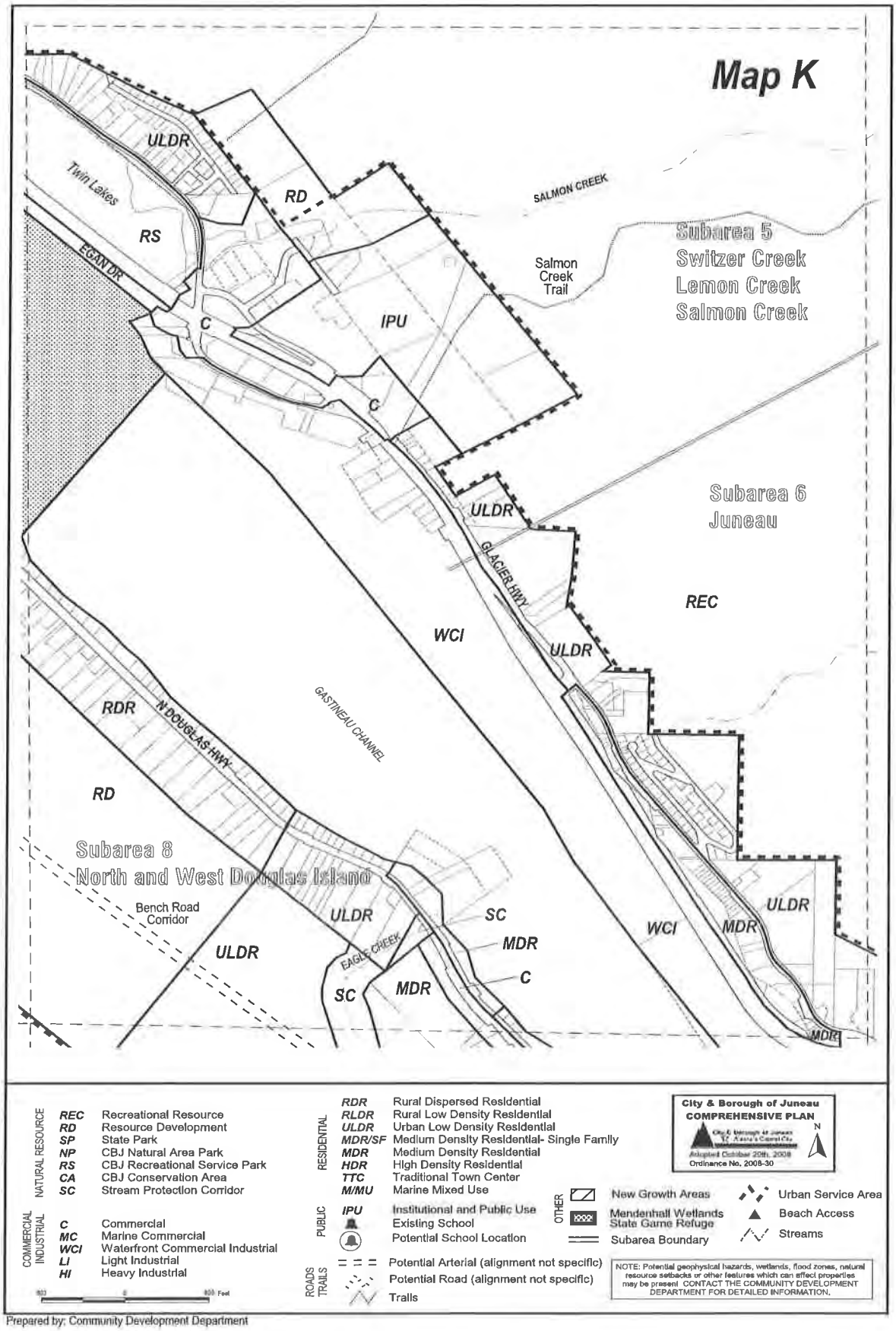
Map K
ULDR
Twin Lakes
RS
EGAN DR
RD
SALMON CREEK
Salmon Creek Trail
Subarea 5
Switzer Creek
Lemon Creek
Salmon Creek
C
IPU
C
ULDR
GLACIER HWY
Subarea 6
Juneau
REC
WCI
ULDR
GASTINEAU CHANNEL
RDR
N DOUGLAS HWY
RD
Subarea 8
North and West Douglas Island
Bench Road Corridor
ULDR
ULDR
EAGLE CREEK
SC
MDR
C
SC
MDR
WCI
MDR
ULDR
MDR
NATURAL RESOURCE
REC Recreational Resource
RD Resource Development
SP State Park
NP CBJ Natural Area Park
RS CBJ Recreational Service Park
CA CBJ Conservation Area
SC Stream Protection Corridor
COMMERCIAL INDUSTRIAL
C Commercial
MC Marine Commercial
WCI Waterfront Commercial Industrial
LI Light Industrial
HI Heavy Industrial
RESIDENTIAL
RDR Rural Dispersed Residential
RLDR Rural Low Density Residential
ULDR Urban Low Density Residential
MDR/SF Medium Density Residential- Single Family
MDR Medium Density Residential
HDR High Density Residential
TTC Traditional Town Center
M/MU Marine Mixed Use
PUBLIC
IPU Institutional and Public Use
Existing School
Potential School Location
ROADS TRAILS
Potential Arterial (alignment not specific)
Potential Road (alignment not specific)
Trails
OTHER
New Growth Areas
Mendenhall Wetlands State Game Refuge
Subarea Boundary
Urban Service Area
Beach Access
Streams
City & Borough of Juneau
COMPREHENSIVE PLAN
Adopted October 20th, 2008
Ordinance No. 2008-30
N
NOTE: Potential geophysical hazards, wetlands, flood zones, natural resource setbacks or other features which can affect properties may be present. CONTACT THE COMMUNITY DEVELOPMENT DEPARTMENT FOR DETAILED INFORMATION.
Prepared by: Community Development Department

Map 11.12

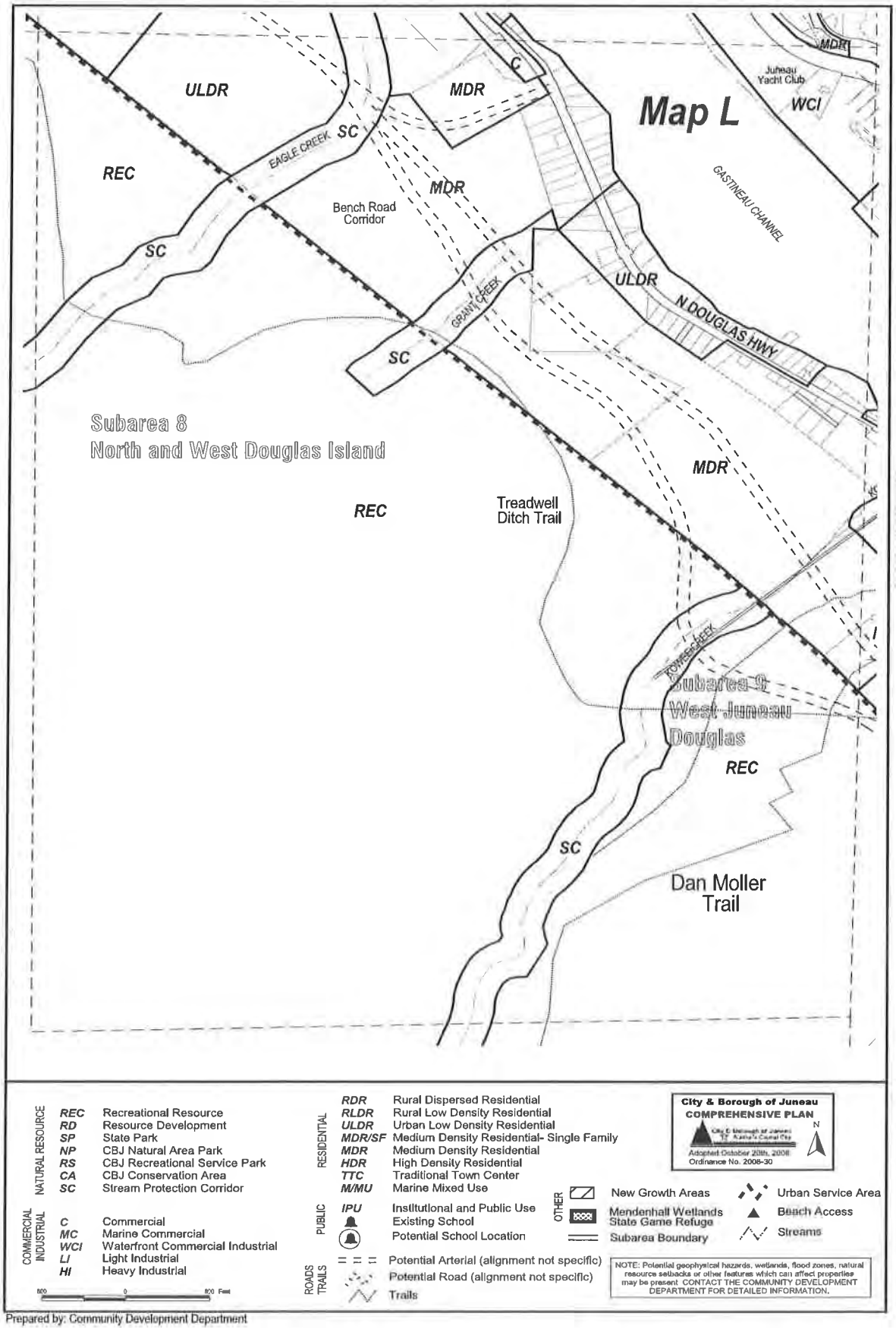
Map L
ULDR
MDR
C
MDR
WCI
Juneau Yacht Club
REC
EAGLE CREEK
SC
MDR
Bench Road Corridor
GASTINEAU CHANNEL
SC
ULDR
GRANT CREEK
N DOUGLAS HWY
SC
Subarea 8
North and West Douglas Island
MDR
REC
Treadwell Ditch Trail
TOWNSEND CREEK
Subarea 9
West Juneau
Douglas
REC
SC
Dan Moller Trail
NATURAL RESOURCE
REC Recreational Resource
RD Resource Development
SP State Park
NP CBJ Natural Area Park
RS CBJ Recreational Service Park
CA CBJ Conservation Area
SC Stream Protection Corridor
COMMERCIAL INDUSTRIAL
C Commercial
MC Marine Commercial
WCI Waterfront Commercial Industrial
LI Light Industrial
HI Heavy Industrial
800 0 800 Feet
RESIDENTIAL
RDR Rural Dispersed Residential
RLDR Rural Low Density Residential
ULDR Urban Low Density Residential
MDR/SF Medium Density Residential- Single Family
MDR Medium Density Residential
HDR High Density Residential
TTC Traditional Town Center
M/MU Marine Mixed Use
PUBLIC
IPU Institutional and Public Use
Existing School
Potential School Location
ROADS TRAILS
Potential Arterial (alignment not specific)
Potential Road (alignment not specific)
Trails
OTHER
New Growth Areas
Mendenhall Wetlands State Game Refuge
Subarea Boundary
Urban Service Area
Beach Access
Streams
City & Borough of Juneau
COMPREHENSIVE PLAN
Adopted October 20th, 2008
Ordinance No. 2008-30
N
NOTE: Potential geophysical hazards, wetlands, flood zones, natural resource setbacks or other features which can affect properties may be present CONTACT THE COMMUNITY DEVELOPMENT DEPARTMENT FOR DETAILED INFORMATION.
Prepared by: Community Development Department

Map 11.13

Subarea 8: North & West Douglas Island (Maps I, J, K, L, Q, R, S, & T)

Community Form: Predominantly Rural.

Urban near the Douglas Bridge.

Two New Growth Areas in West Douglas.

NATURAL RESOURCES AND HAZARDS:

Type	*General Location*
Wildlife (Eagle nests)	25 eagle nests along North Douglas shoreline and 60 along West Douglas shoreline (2006 data)
Stream and Lakeshore Corridors	Eagle, Peterson, Fish, Grant, Falls, Neilsen, Hendrickson, Johnson, Ninemile, and Hilda Creeks
Wetlands/Tidelands	Shoreline between Fritz Cove and Kowee Creek (including the Mendenhall Wetlands State Game Refuge), along and above North Douglas Highway
Gravel and Mineral Resource	Small area on lower Fish Creek, area near Juneau-Douglas Bridge, Eagle Creek area
Hazards	Flooding: Lower Fish Creek, Lower Peterson Creek, all coastal areas. Landslide/Avalanche: Hendrickson Creek, Upper Fish Creek, and various hillside areas, including the vicinity of Eaglecrest Ski Area
Watershed	Upper Fish and Hilda Creeks
Cultural and Historic Resources	Treadwell ditch, Cropley Lake, 3rd Cabin area (Dan Moller trail/ Kowee Creek)
Scenic Corridor/Viewshed	One-quarter mile each side of Fish Creek Rd.; Water side of North Douglas Highway from Fish Creek Park to False Outer Point Beach Access
Adopted Subarea Palns	West Douglas Concept Plan, Land Use Chapter 6

Table 11.8

Recognizing the growth potential of both North and West Douglas, it is important to also recognize the limitations of North Douglas Highway. North Douglas Highway is a two-lane, paved minor arterial roadway with no sidewalk, separated pedestrian pathway or bicycle lane, operated and maintained by the State Department of Transportation and Public Facilities (ADOT&PF). It is also a local access residential street with over 500 private driveways accessing directly to the road. This creates dangers to the local users and those passing through to recreation destinations. Any substantial increase in traffic to the area, either associated with new residential development or increased commercial recreational/tourism use of the area, should be accompanied by the provision of separated pedestrian and bicycle pathways on each side of the road. Furthermore, school buses should be provided pull-outs or other facilities to allow buses to pull out of the travel lane to allow other vehicles to pass after children have safely crossed the street.

Portions of West Douglas Island are designated as New Growth Areas and can accommodate over 2,000 new residential units along with commercial, industrial and recreational facilities. All utilities and services would need to be provided and self-contained within these New Growth Areas once road access is assured. These New Growth Areas are intended for phased development in accordance with the West Douglas Concept Plan, Chapter 6.

North Douglas Highway is accessed solely by the Juneau-Douglas Bridge. Vehicle traffic at the intersection of the bridge landing at Tenth Street and Egan Drive exceeds its design capacity in the morning commute peak period of from around 7:30 AM to 8:30 AM (snow conditions extend this peak period to from around 7:00 AM to 8:30 AM). A new roundabout/traffic circle was installed at the Island terminus of the Juneau-Douglas Bridge that has increased the traffic flow of that intersection to a level of service (LOS) C or better; however the mainline terminus of the bridge at Tenth Street and Egan Drive is at a LOS E or F in the morning peak period during the 7 to 9 AM commute. In 2006, about half the motorists traveled straight across Egan Drive or turned right, indicating that they work in downtown Juneau. It is likely that residents of new housing on Douglas Island will have the same employment and commute patterns. Even if all the new residents commute by public transit, the current capacity of the Juneau-Douglas Bridge terminus at Tenth Street and Egan Drive cannot accommodate these additional vehicle trips and the traffic volume capacity must be expanded and/or staggered work hours for downtown Juneau government workers must be mandated and enforced.

A December 2002 ADOT&PF report recommended several options for expanding capacity and improving the LOS on the Juneau-Douglas Bridge. The existing roundabout at the Douglas Island terminus was recommended and implemented. The CBJ-accepted improvements to the mainland terminus at Tenth Street and Egan Drive have not been funded by ADOT&PF. Further analysis of potential improvements to the mainland terminus of the bridge may be needed, along with community understanding of the need for the improvements, and community cooperation to fund and build them.

Along with the Juneau-Douglas Bridge improvements, a North Douglas crossing of Gastineau Channel is needed to accommodate new development in the West Douglas New Growth Area. Douglas Island has the most buildable land in the CBJ (more flat and dry than is available on the mainland) and it is essential to provide a North Douglas crossing to Douglas Island in order to ease the CBJ's critical housing crisis. Careful analysis of the location and configuration of the North Douglas terminus, or "landing," of this new bridge is needed, along with a careful analysis of the ways in which traffic to and from West Douglas is conveyed. The conveyance of traffic to new development in North Douglas or West Douglas may be accomplished in the long-term by road and light rail or heavy rail facilities and, therefore, the right-of-way for transport should be wide enough to accommodate fixed-guideway, motorized and non-motorized transport. The analysis of transport systems to North and West Douglas from a new bridge landing should be conducted in conjunction with a neighborhood planning effort for North Douglas. See also the transportation discussion for Douglas Island in Chapter 8 of this Plan, and the Community-Preferred Alternative location for the North Douglas Crossing identified in the 2007 North Douglas Crossing Public Involvement Project and Resolution 2415(am), Vanderbilt Hill.

Guidelines and Considerations for Subarea 8:

1. In the near term, conduct a neighborhood plan for North Douglas to address current and anticipated neighborhood issues such as traffic, transit, pedestrian and bicycle safety, residential uses, densities and utilities, parks, open space, access to water bodies, community gardens, neighborhood-serving commercial uses, and recreational uses for local and CBJ residents as well as regional and international visitors. This plan should incorporate engineering, costs and environmental assessments and findings of a North Douglas bridge landing. This transportation analysis of the bridge and West Douglas traffic conveyance should be combined with the comprehensive North Douglas subarea planning effort that should addresses transportation, utilities, in-fill housing, recreation and open space/natural areas, and public safety issues in a community-wide, holistic approach. The North Douglas Crossing was not received favorably by the public in the 2010 voting on a ballot proposition to fund construction of the crossing; however, the language on the ballot specified one location in particular, and did not explain the long history of this project or its importance to Juneau's future. A new bridge landing in North Douglas should be carefully designed to avoid a physical separation of the North Douglas community, while preserving its rural character.

2. In its current condition, the northwest, west and southern areas of Douglas Island are in a natural, undeveloped state. Portions of the northwest island provide a recreational resource for the whole community. In addition to Eaglecrest, there are miles of shoreline and many acres of unimproved park area. A unique feature is a mile-long stretch of waterfront roadway from the North Douglas boat launch facility to False Outer Point. This corridor offers a world class vista of the Mendenhall Glacier, Mendenhall Peninsula and small islands. This area should be designated a scenic corridor both locally and with the state ADOT&PF. No obtrusive structures should be built on the water-side of the road and any development within this view corridor should assure the preservation of these views

and should enhance the open space/natural areas, public access and non-motorized pathways along the corridor. With the exception of boat launch facilities at the boat harbor, no permanent structures associated with commercial activities should be permitted along the shore side of the road from Cove Creek to False Outer Point.

3. The un-roaded shoreline on the west side of Douglas Island has development potential, both for urban residential use and for port development. The westerly shoreline is owned almost entirely by the Goldbelt Corporation and the land immediately upland is owned by the CBJ. Goldbelt has considered any number of development scenarios. A West Douglas Conceptual Plan was published in May 1997 and Chapter 6 of that Plan was adopted as an element of the CBJ Comprehensive Plan in 2007. This Plan encourages and facilitates the development of a New Growth Area in West Douglas when water, sewer and road infrastructure are available and adequate to serve the new development. New development should preserve shoreline and streamside areas in public ownership as open space/natural areas with public access points.

4. Unless and until municipal water and sewer services are provided to the North Douglas area, continue to allow for rural residential densities along the North Douglas Highway corridor and maintain the Resource Development land use designation for upland areas. Where municipal water and sewer service are provided, more efficient use of this land should be encouraged. Residential densities should be increased when, and where, roads, terrain, transit and other public services would provide the carrying-capacity for the additional residential population. However, the areas designated MDR but not currently provided municipal sewer service should remain in zoning designations that limit development to very low densities until municipal water and sewer service are provided and driveway access, roadway capacity, and intersection capacities and facilities serving that property meet the livability standard of a Level of Service D or better.

5. The Parks and Recreation Comprehensive Plan, Chapter 8, recommends a number of parks, trail, community garden and stream corridor improvements. Those recommendations include: (a) implement the 2002 Fish Creek Park Master Plan; (b) develop a master plan for recreation lands from Fish Creek to Point Hilda in North and West Douglas; (c) support construction of separated bicycle and pedestrian pathways along North Douglas Highway; (d) work with the North Douglas golf course developer to allow for cross country ski and walking use of the course with lighted trails for winter use; (e) develop a community park on West Douglas; (f) develop a neighborhood park in North Douglas that includes both passive and active recreation areas; (g) develop a community garden in the North Douglas area; (h) retain a trail corridor on CBJ lands beyond North Douglas; (i) consider acquisition of private land at Outer Point for public recreation use; and (j) coordinate recreational and maintenance activities at Eaglecrest.

6. Protect access to the Treadwell Ditch Trail and beach trails and support improvements to trails as recommended by Trail Mix.

7. Retain an easement for a bench road and trail corridor on CBJ lands around the perimeter of the Island (a trans-island road and trail system). As development proceeds near Peterson Creek, the CBJ should actively pursue development of a trail corridor that begins at the current end of the North Douglas Highway to the new development.

8. Prevent development within the Fish Creek Road scenic corridor, which is represented by a one-quarter mile distance from the Fish Creek Road right-of-way on each side of the road. No structures, other than utilities, shall be permitted therein. Minimize to the greatest extent practicable, intersecting driveways and other vehicular access points on Fish Creek Road from North Douglas Highway to Eaglecrest Lodge.

9. Retain Fish Creek Park as designated recreational open space/natural areas and restrict any development adjacent to the park, other than non-motorized access trails or bridges, which would adversely impact the valuable estuarine habitat and recreational use of the area.

10. On CBJ-owned lands, maintain a 200 foot stream buffer on each side of Fish Creek.
On CBJ-owned lands that are not designated for disposal in the 1999 CBJ Land Management Plan, maintain 200 foot stream buffers on each side of the following waterbodies: Peterson Creek, Eleven Mile Creek, Middle Creek, and Hilda Creek. This buffer zone or setback may be adjusted or altered,

on a case-by-case basis, when a scientific analysis of the specific function(s) of the particular creek's value(s) finds that the setback should be more, based on its functional value(s). The setback from Peterson Creek as it passes through the land included within the CBJ Totem Creek Golf Course Lease Agreement, as outlined in existing (expired) permits, may be less than suggested here if that project is proposed again, provided that the water quality of the creek is not impaired by non-native pesticides or fertilizers, sediments or other materials, and the riparian habitat of the creek is not impaired by invasive species.

11. As much as is practical and efficient, coordinate recreational and maintenance activities and shared use of facilities and equipment and coordinate management activities with the Eaglecrest Facility and programs. Many of the facilities at Eaglecrest can serve both skiers and non-skiers and both winter and off-season recreational activities and events. Shared use and year-round use of the Eaglecrest facilities and lands should be encouraged and facilitated.

12. Identify historic and cultural resources within the subarea. Projects that may impact historic resources identified within this subarea are to be reviewed by the Historic Resources Advisory Committee (HRAC) prior to issuance of a permit. Where new historic or cultural resources are discovered or identified, the Juneau-Douglas City Museum should be contacted immediately for documentation and technical assistance toward preservation and/or curating of the resource. The demolition or removal of historic resources should be avoided and should only occur when no other option for its preservation or relocation to a suitable site exists.

13. When reviewing development proposals for Douglas Island, ensure that the site layout and circulation system configuration proposed minimizes direct vehicular access onto North Douglas Highway and does not obstruct or harm potential roadway access to an upland bench road to West Douglas or non-motorized access to a trans-island trail system, including the Treadwell Ditch Trail.

14. The West Douglas Concept Plan, Chapter 6, Land Use section has been adopted as an element of the CBJ Comprehensive Plan. Development within these New Growth Areas is subject to a master development plan to be adopted by the Assembly. Each subarea in these New Growth Areas may be planned in phases, consistent with the general guidelines in Chapter 6 of the West Douglas Concept Plan.

Subarea 9: Douglas & West Juneau (Maps M, O, & P)

Community Form: Urban in downtown Douglas and West Juneau

Rural south of downtown Douglas

NATURAL RESOURCES AND HAZARDS:

Type	*General Location*
Wildlife (Eagle nests)	8 eagle nests in Douglas and South Douglas (2006 data)
Stream and Lakeshore Corridors	Kowee, Bear, Lawson, Bullion, Ready Bullion, and Nevada Creeks
Wetlands/Tidelands	Mouth of Kowee and Lawson creeks, along the shoreline south of downtown Douglas, and on the bench above Douglas Highway.
Cultural and Historic Resources	Downtown Douglas, Treadwell mine complex, Douglas cemeteries

Table 11.9

Invitation to Comment

On a proposal to be heard by the CBJ Planning Commission

Your Community, Your Voice

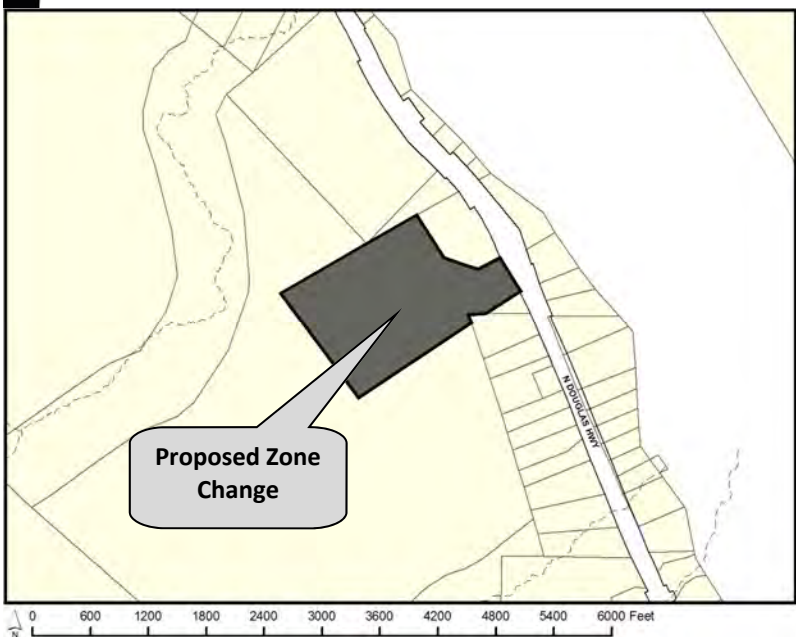

CITY AND BOROUGH OF JUNEAU
ALASKA'S CAPITAL CITY
COMMUNITY DEVELOPMENT
155 S. Seward Street Juneau, Alaska 99801

TO:

An application has been submitted for consideration and public hearing by the Planning Commission for a **proposed change of zoning from D15 to General Commercial, General Commercial/Light Commercial, or Light Commercial** on North Douglas Highway.

TIMELINE

Staff Report expected to be posted **Monday, April 5, 2021** at **https://juneau.org/community-development/planning-commission.** Find hearing results, meeting minutes and more here as well.

Now through March 22

Comments received during this period will be sent to the Planner, **Joseph Meyers,** to be included as an attachment in the staff report.

March 23 — noon, April 12

Comments received during this period will be sent to Commissioners to read in preparation for the hearing.

HEARING DATE & TIME: 7:00 pm, April 13, 2021

This virtual meeting will be by video and telephonic participation only. To join the Webinar, visit: https://juneau.zoom.us/j/95201900876. The Webinar ID is: 952 0190 0876. To join by telephone, call: +1 253 215 8782 or +1 346 248 7799 or +1 669 900 6833 or +1 301 715 8592 or +1 312 626 6799 or +1 929 436 2866 and enter the Webinar ID.

April 14

The results of the hearing will be posted online.

Phone: **(907)586-0715** ◆ Email: **pc_comments@juneau.org**
Mail: **Community Development, 155 S. Seward St, Juneau AK 99801**

Printed March 9, 2021

Case No.: AME2021 0001
Parcel No.: 6D0601150011
CBJ Parcel Viewer: http://epv.juneau.org

Please Come to a Meeting

About a Zone Change in Your Neighborhood

Your Community, Your Voice

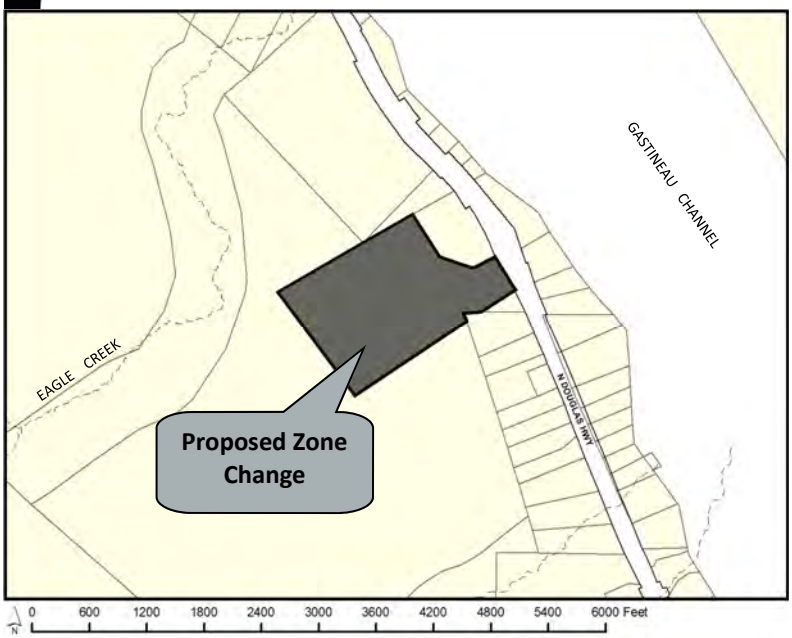

CITY AND BOROUGH OF JUNEAU
ALASKA'S CAPITAL CITY
COMMUNITY DEVELOPMENT
155 S. Seward Street Juneau, Alaska 99801

TO:

The Community Development Department is hosting an opportunity for the community to discuss an application for a **proposed change of zoning from D15 to General Commercial, General Commercial/ Light Commercial, or Light Commercial** on North Douglas Highway. Your questions, comments, and concerns are welcome.

CITY AND BOROUGH OF JUNEAU
ALASKA'S CAPITAL CITY
COMMUNITY DEVELOPMENT

NEIGHBORHOOD MEETING

Thursday, March 11, 6:00 pm

This meeting will be held via Zoom Webinar

This virtual meeting will be by video and telephonic participation only. To join the Webinar, visit https://juneau.zoom.us/j/92883954457. The Webinar ID is: 928 8395 4457. To join by telephone, call +1 253 215 8782 or +1 346 248 7799 or +1 669 900 6833 or +1 301 715 8592 or +1 312 626 6799 or +1 929 436 2866 and enter the Webinar ID. If you are not able to attend this meeting but have questions or comments, please contact Joseph Meyers, CDD Planner, at (907) 586-0466 or joseph.meyers@juneau.org.

This project is scheduled for review by the Planning Commission on April 13, 2021. All property owners within 500 feet of the proposed rezone will receive a separate notice with details on how and where to submit comments or testify before the Commission.

Case No.: AME2021 0001
Parcel No.: 6D0601150011
CBJ Parcel Viewer: http://epv.juneau.org

Printed February 25, 2021

Attachment B - Abutters Notice and Public Notice Sign Photo

Attachment B - Abutters Notice and Public Notice Sign Photo

Attachment B - Abutters Notice and Public Notice Sign Photo

Attachment B - Abutters Notice and Public Notice Sign Photo

Attachment C - Permissible Use Comparison Table

	Use description	D15	LC	GC	
1.110	Single-family detached; one dwelling per lot	1	1	1	No change from current to proposed zoning
1.120	Single-family detached; two dwellings per lot				Not allowed in this zoning district
1.130	Single-family detached; accessory apartment	1,3	1,3	1,3	1 = Department approval
1.140	Single-family detached, two dwellings per lot, accessory apartments				3 = Planning commission approval
1.200	Duplex	1	1	1	1,3 = Dept approval if minor; planning commission approval if major
1.300	Multifamily dwellings	1,3	1,3	1,3	
1.510	Child and day care homes; child; 12 or fewer children under the age of 12	1	1	1	
1.530	Adult; 12 or fewer people, 12 years or older	1	1	1	
1.550	Child care residence, 6 to 9 children under 18 years of age	3	3	3	
1.610	Rooming, boarding houses, bed and breakfasts, single room occupancies with shared facilities, transitional housing, and temporary residences. Owner or manager must live on site	1,3	1,3	1,3	
1.620	Hotels & Motels		1,3	1,3	
1.630	Single room occupancies with private facilities	1,3	1,3	1,3	
1.700	Home occupations	1	1	1	
1.810	Residential mobile homes on individual lots				
1.815	Caretaker mobile homes on individual lots	3	3	3	
1.820	Mobile home parks	3	3	3	
1.830	Mobile home subdivision	3	3	3	
1.840	Recreational vehicle parks				
1.910	Commonwall developments; two dwelling units	1			
1.911	Accessory apartments	1,3	1,3	1,3	
1.920	Three or more dwelling units	1,3	1,3	1,3	
1.930	Two dwelling unit structures allowed under special density considerations, subsections 49.25.510(h)	3	3		
2.120	Sales and rental goods, merchandise, or equipment; with less than 5,000 square feet and less than 20 percent of the gross floor area of outside merchandising of goods; miscellaneous		1	1	
2.130	Marine merchandise and equipment		1,3	1,3	
2.200	Storage and display of goods with greater or equal to 5,000 square feet and/or 20 percent of the gross floor area of outside merchandising of goods.		1,3	1,3	
2.300	Marijuana retail store		3	3	
3.050	Offices of not more than 1,000 square feet	3	1	1	
3.100	Offices greater than 1,000 but not more than 2,500 square feet	3	1	1	
3.300	Research, laboratory uses		1,3	1,3	
3.400	Offices greater than 2,500 square feet		1,3	1,3	
3.500	Marijuana testing facility		3	3	
4.050	Light manufacturing	3	1,3	1,3	
4.070	Medium manufacturing			3	
4.100	Heavy manufacturing				
4.150	Rock crusher				
4.200	Storage of explosives and ammunition				
4.210	Seafood processing				
4.220	Marijuana product manufacturing facility			3	
5.110	Elementary and secondary schools including associated grounds and other facilities	3	3	3	
5.120	Trade, vocational schools, commercial schools		3	3	
5.130	Colleges, universities	3	3	3	
5.200	Churches, synagogues, temples	3	1,3	1,3	
5.300	Libraries, museums, art galleries	3	1,3	1,3	
5.400	Social, fraternal clubs, lodges, union halls, yacht clubs		1,3	1,3	
6.110	Bowling alleys, billiard, pool halls		1,3	1,3	
6.120	Tennis, racquetball, squash courts, skating rinks, exercise facilities, swimming pools, archery ranges	3	1,3	1,3	
6.130	Theaters seating for 200 or fewer	3	1	1	
6.135	Theaters seating from 201 to 1,000		3	1	
6.140	Coliseums, stadiums, and other facilities in the 6.100 classification seating for than 1,000 people			3	
6.150	Indoor shooting range			3	
6.210	Recreational facilities such as golf, country clubs, swimming tennis courts not constructed pursuant to a permit authorizing the construction of a school	3	3	1,3	
6.220	Miniature golf courses, skateboard parks, water slides, batting cages	3	3	1,3	

6.240	Automobile, motorcycle racing tracks; off-highway vehicle parks			3
6.260	Open space	1	1	1
6.264	Parks with improved facilities, not approved in conjunction with a major subdivision; Capacity for up to 20 people	1	1	1
6.266	Parks with improved facilities, not approved in conjunction with a major subdivision; Capacity for more than 20 people	3	3	3
6.270	Aerial conveyances and appurtenant facilities	3	3	3
6.280	Shooting ranges			
7.100	Hospital		3	3
7.150	Health care clinics, other medical treatment facilities providing outpatient care	3	1,3	1,3
7.200	Assisted living	3	3	1,3
7.300	Day care centers	3	1,3	1,3
7.310	Child care centers	3	1,3	1,3
7.500	Correctional facilities	3	3	3
7.600	Sobering Centers		3	3
8.050	Small restaurants, less than 1,000 sq. ft. without drive-through service	3	1	1
8.100	Restaurants, bars without drive-through service		1,3	1
8.200	Restaurants, coffee stands with drive through service		1,3	1
8.300	Seasonal open air food service without drive through		1,3	1
9.050	Motor vehicle, mobile home sale or rental		1,3	1,3
9.100	Motor vehicle repair and maintenance, including body work			3
9.200	Automotive fuel station		3	1
9.300	Car wash		3	1
9.400	Boat sales or rental		3	1
9.450	Boat repairs and maintenance			3
10.100	Automobile parking garages or parking lots not related to a principal use on the lot		3	1
10.200	Storage and handling of goods not related to sale or use of those goods on the same lot on which they are stored			
10.210	All storage within completely enclosed structures		3	1
10.220	General storage inside or outside enclosed structures			1,3
10.232	Snow storage basin; neighborhood, less than 1/2 acre	3	3	1
10.235	Snow storage basin; regional, 1/2 to 1 acre		3	3
10.237	Area wide, over 1 acre			3
10.300	parking of vehicles or storage equipment outside enclosed structures where they are owned and used by the user of the lot and parking and storage is more than a minor and incidental use of the lot			1,3
10.400	Temporary contractor's storage connected with construction project off-site for a specified period of time	3	3	1,3
10.510	Public, commercial moorage		3	3
10.520	Private moorage	1,3	1,3	1,3
11.110	Recycling operations; Enclosed collection structures of less than 80 square feet total and less than six feet in height	1	1	1
11.120	Recycling operations; Enclosed structures for recyclable materials collection	1,3	1,3	1,3
11.130	Recycling operations; Sorting, storage, preparation for shipment occurring outside an enclosed structure			
11.200	Reclamation landfill not associated with a specific use	1,3	1,3	1,3
11.300	Sanitary landfill			
12.100	Veterinary clinic		3	1,3
12.200	Kennel		3	3
12.250	Day animal services, grooming, walking, day care		3	3
12.300	Zoos, aquaria, or wild animal rehabilitation facilities with a visitor component		3	3
12.310	Wild animal rehabilitation facilities without a visitor component		3	3
12.400	Horseback riding stables, dog team yards		3	3
14.100	Aquaculture		3	3
14.150	Weirs, channels, and other fisheries enhancement	1,3	1,3	1,3
14.210	Commercial agriculture operations; excluding farm animals	3	3	3
14.220	Commercial agriculture operations; including farm animals			
14.230	Commercial agriculture operations; stabling of farm animals		3	3

14.240	Marijuana cultivation (500 square feet or more under cultivation)		3	3
14.245	Marijuana cultivation (fewer than 500 square feet under cultivation)		3	3
14.253	Personal use agriculture (Hens, 6 maximum)	3	1	1
14.300	Silviculture and timber harvesting			
14.400	Mining operations			
14.500	Sand and gravel operations		3	3
14.800	Spring water bottling	3	3	3
15.100	Post office	3	1,3	1,3
15.200	Airport			
15.400	Military reserve, national guard centers		3	3
15.500	Heliports, helipads			3
15.610	Transit Centers	3	1,3	1,3
15.620	Transit Station	1	1	1
15.630	Park and ride not associated with a transit station	3	1	1
15.700	Public works facility		3	3
16.100	Dry cleaner, laundromat; drop-off and pickup only, no onsite laundry or dry cleaning process		1,3	1,3
16.200	Full service onsite laundry and/or dry cleaning		3	1,3
17.100	Utility facilities; minor	1	1	1
17.150	Utility facilities; intermediate	3	3	1,3
17.200	Utility facilities; major	3	3	3
17.300	Driveways and private roads			
18.100	Towers and antennas 35 feet or less	1	1	1
18.200	Towers and antennas 35 to 50 feet	3	1	1
18.300	Towers and antennas more than 50 feet in height	3	3	3
18.400	Amateur (ham) radio towers and antennas more than 35 feet in height	1	1	1
19.100	Open air markets (farm, craft, flea, and produce)		1,3	1
19.210	Nurseries, commercial greenhouses; retail sales	3	1,3	1
19.220	Nurseries, commercial greenhouses; nonretail sales	1,3	1,3	1
19.230	Marijuana cultivation (5000 sq. ft. or more under cultivation)		3	3
19.240	Marijuana cultivation (fewer than 500 square feet under cultivation)		3	3
20.100	Cemetery	3	3	3
20.200	Crematorium			
20.300	Funeral home		1,3	1
21.100	Resort, lodge			
21.200	Campground			
21.300	Visitor, cultural facilities related to features of the site		3	3
22.100	Temporary structures used in connection with construction	1	1	1

Attachment D - Comp Plan Map

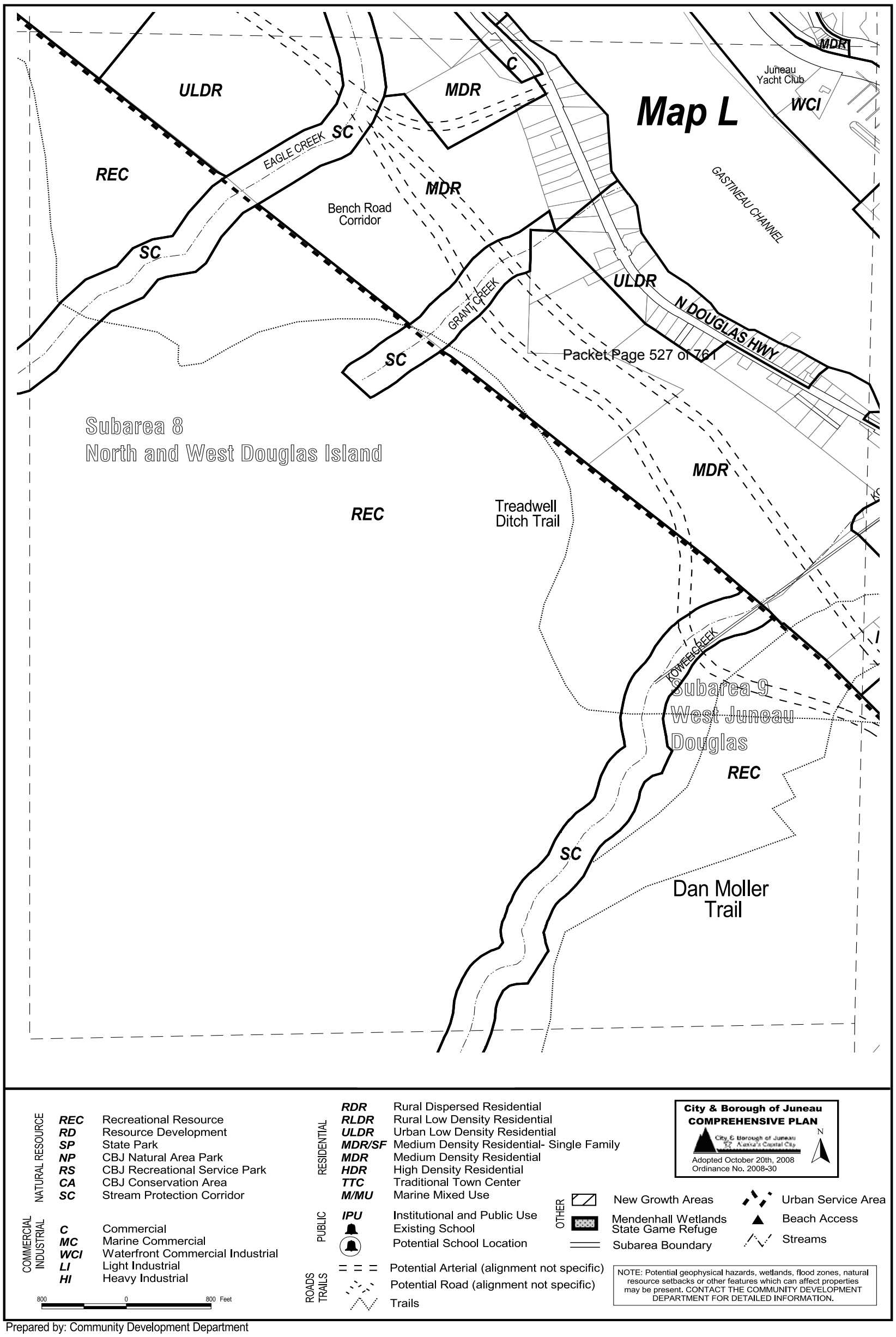

Prepared by: Community Development Department

Map 11.13

3.3 Traffic Operations

Traffic conditions were evaluated for this study using the Level of Service (LOS) methodologies of the *Highway Capacity Manual* (Transportation Research Board, 2000). The *Highway Capacity Manual* (HCM) is a nationally recognized and locally accepted method of measuring traffic flow and congestion for intersections. Criteria range from LOS A, indicating free-flow conditions with minimal vehicle delays, to LOS F, indicating congestion with significant vehicle delays.

LOS for a signalized intersection is defined in terms of the average delay experienced by all vehicles at the intersection, typically over a specified time period such as a peak hour. Threshold values are listed in Table 15. LOS for roundabout intersections has not been defined by the HCM due to the variety of analysis methods available. However, the National Cooperative Highway Research Program (NCHRP) Report 572 recommends using stop controlled intersection criteria for roundabout LOS. These criteria are shown in Table 15 and are reported by approach. The differing LOS criteria reflect drivers' increased tolerance for delay at signalized intersections.

Table 15- Intersection Level of Service Criteria

Level of Service	Signalized Control Delay (sec/veh)	Roundabout Control Delay (sec/veh)	General Description
A	≤10	≤10	Free flow
B	>10 – 20	>10-15	Stable flow (slight delays)
C	>20 – 35	>15-25	Stable flow (acceptable delays)
D	>35 – 55	>25-35	Approaching unstable flow (tolerable delay, occasionally wait through more than one signal cycle before proceeding)
E	>55 – 80	>35-50	Unstable flow (intolerable delay)
F	> 80	>50	Forced flow (jammed)

Source: Highway Capacity Manual (TRB, 2000)

The Egan Drive and 10th Street intersection is a signalized intersection. The LOS was calculated using Synchro Version 7, Build 793 (Trafficware, 2007). This intersection analysis software tool is based on the methodologies of HCM 2000 and is accepted by DOT&PF. The Douglas roundabout intersection was analyzed using the methodologies presented in NCHRP 572, which is the DOT&PF preferred method. Roundabout delay and LOS are reported as a weighted average for the entire intersection, while the volume to capacity (v/c) ratio is reported for the approach with the highest v/c ratio. Signal statistics are reported as an average for the entire intersection.

CITY AND BOROUGH OF JUNEAU

TRAFFIC IMPACT ANALYSIS

NORTH DOUGLAS HIGHWAY REZONE

Juneau, Alaska

August 2009

Prepared for:
City and Borough of Juneau
155 S Seward Street
Juneau, Alaska 99801

Prepared by:

USKH
SHARED VISION. UNIFIED APPROACH.
3031 Clinton Drive
Juneau, Alaska 99801
Phone (907) 790-2901
Fax (907) 790-3901

USKH WO# 978801

ATTACHMENT D

This page intentionally left blank.

SUMMARY

The City and Borough of Juneau is anticipating the re-zoning of land along North Douglas Highway. The re-zoning is allowed under the 2008 update of the City and Borough of Juneau Comprehensive Plan. The City and Borough of Juneau is extending the sanitary sewer system along North Douglas Highway, which removes a significant impediment to development. Housing growth is expected to include both the development of vacant land and subdivision of existing, developed parcels.

This Traffic Impact Analysis includes estimates of projected growth along this corridor and the analysis of impacts to traffic conditions at the Douglas roundabout and at the Egan Drive and 10th Street intersection. Level of service and capacity at these intersections will be negatively impacted by development along North Douglas Highway. The rezoning action will not generate traffic, but as development occurs over time, capacity improvements will eventually be required to meet minimum traffic standards.

TABLE OF CONTENTS

SUMMARY i
ACRONYMS iv
1 INTRODUCTION 1-1
2 DEVELOPMENT PROJECTION 2-2
2.1 CBJ Development Trends 2-2
2.2 Future CBJ Trends 2-5
2.3 North Douglas Projections 2-10
2.4 Section One: Kowee Creek to End of 2009 Sewer Extension 2-10
2.5 Section Two: End of 2009 Sewer Extension to Bonnie Brae 2-15
2.6 Section Three: Bonnie Brae-Subdivision and the Commercial Area on the Water Side 2-16
2.7 Summary 2-16
3 TRAFFIC ANALYSIS 3-18
3.1 Trip Generation and Distribution 3-18
3.2 Trip Distribution and Forecast Traffic Volumes 3-19
3.3 Traffic Operations 3-20
3.3.1 Existing Conditions 3-21
3.3.2 Future Conditions 3-21
3.4 Access Road Intersections 3-27
3.5 Pedestrian and Bicycle Facilities 3-28
3.6 Accident Analysis 3-28
3.7 Traffic Impact Mitigation 3-29
4 CONCLUSIONS 4-1

TABLES

Table 1 - CBJ Housing and Population History 2-3
Table 2 - Building Permit Records 2-4
Table 3 - Occupancy and Vacancy Data 2-5
Table 4 - Population and Housing Growth Projection 2-7
Table 5 - Housing Mix in 2008 2-8
Table 6 - Housing Mix Comparison: 2001-2008 2-9
Table 7 - Housing Mix Comparison, New Units: 2020 to 2030 2-10
Table 8 - Section One, Uphill Side, Development Potential Scenarios 2-15
Table 9 - Development Potential, Kowee Creek to Bonnie Brae 2-17
Table 10 - North Douglas Sewer - Growth Projection Summary 2-17
Table 11 - ITE Land Uses and Descriptions 3-18
Table 12 - Project Trip Generation, D-10 Zoning 3-19
Table 13 - Project Trip Generation, D-15 Zoning 3-19
Table 14 - Project Trip Generation, D-18 Zoning 3-19
Table 15 - Intersection Level of Service Criteria 3-20
Table 16 - Existing Level of Service Summary – AM Peak Hour 3-21
Table 17 - Existing Level of Service Summary – PM Peak Hour 3-21
Table 18 - Future Level of Service Summary – AM Peak Hour 3-21
Table 19 - Future Level of Service Summary – PM Peak Hour 3-22
Table 20 - Collisions by Year 3-29
Table 21 - Collisions by Location 3-29
Table 22 - Collisions by Type 3-29

FIGURES

Figure 1 Study Area Map 2-13
Figure 2 Section One Detail Map 2-14
Figure 3 AM Traffic Volumes for 10th and Egan 3-23
Figure 4 PM Traffic Volumes for 10th and Egan 3-24
Figure 5 AM Traffic Volumes for Douglas Roundabout 3-25
Figure 6 PM Traffic Volumes for Douglas Roundabout 3-26
Figure 7 Left-Turn Lane Thresholds 3-27
Figure 8 Right-Turn Lane Thresholds 3-28

ACRONYMS

CBJ.....City and Borough of Juneau
CDD.....Community Development Department
DOL.....Alaska Department of Labor and Workforce Development
DOT&PF.....Alaska Department of Transportation and Public Facilities
DU.....dwelling unit
EIS.....Environmental Impact Statement
ITE.....Institute of Transportation Engineers
LOS.....level of service
NCHRP.....National Cooperative Highway Research Program
NDH.....North Douglas Highway
PPH.....persons-per-household
PUD.....Planned Unit Development
ROW.....right-of-way
TIA.....Traffic Impact Analysis
v/c.....volume to capacity ratio

1 INTRODUCTION

The City and Borough of Juneau (CBJ) has requested a traffic impact analysis (TIA) for the re-zoning of land along North Douglas Highway (NDH), and specifically for the area bounded by Kowee Creek on the southeast and Bonnie Brae subdivision to the northwest. The re-zoning is anticipated and allowed under the 2008 update of the CBJ Comprehensive Plan

It is unlikely that proposed development over time due to the rezone will tax the capacity of NDH. The Alaska Department of Transportation and Public Facilities (DOT&PF) is most interested in the potential impacts to traffic conditions at the Douglas roundabout and at the intersection of Egan Drive and 10th Street. This TIA includes a development projection to support the traffic projections needed for the analysis of these intersections. The analysis includes capacity and safety studies.

2 DEVELOPMENT PROJECTION

The NDH corridor can be divided into three fairly specific sections (see Figure 1 – Study Area Map). Section One is the first mile or so of NDH that will be served by the upcoming sewer project. Section Two is the area between Section One and Bonnie Brae. Section Three is Bonnie Brae itself and the area across the highway on the channel side. The development potential for each section will be projected in this Development Projection Summary. First, however, some general information and analysis of Juneau's population and housing history are needed to set the stage.

2.1 CBJ Development Trends

The development of a city can be somewhat characterized with statistics on population and housing. There are three sources of information on population in Alaska: 1) the U.S. Census Bureau; 2) the Alaska Department of Labor and Workforce Development (DOL); and 3) the CBJ's Community Development Department (CDD) annual population estimate. Data on housing is taken from CDD's building permit records and the Assessor's records. Table 1 shows combined data from these sources.

There is quite a difference between CDD's estimate for 1990 and the U.S. Census result for that year. More recently, the DOL and CDD estimates are much closer to each other and both agencies show that the population high point was in 2005. The difference between the estimates was only 11 people. More significantly, Juneau has lost population from 2005 to the present. This is due to several factors:

- Construction on the Kensington Mine was largely complete by May 2008, and construction workers that had moved to Juneau on a temporary basis had left town by the time the estimate was prepared[1].
- Movement of several state department commissioner positions, and their support staff, to places outside Juneau.
- A generally flat economy locally.
- The 2008 nationwide general recession, first sensed in early 2008, but in full tilt by the end of the year.

Two sources of data on the housing stock are in play. Table 1 shows housing stock estimates drawn from the CBJ Assessor's records. The other source is CDD's Building Permit records. Table 2 provides a summary of the history from that source.

[1] A large reduction in staff at the Kensington Mine from over 100 to about 20 today occurred after CDD published the 2008 population estimate. This decline will show up in the mid-2009 estimate, if CDD does one.

Table 1 - CBJ Housing and Population History

No. Dwelling Units* (DU)	Persons per Household (PPH)	Population Estimates			
				CBJ Comm. Dev. Dept	
		Year	AK Dept. of Labor	Population	Mo./Yr. Prepared
13,007	2.48	2008	N/A	30,947	05/08
		2007	N/A	N/A	
12,801	2.48	2006	30,650	31,160	06/06
		2005	31,182	31,193	02/06
		2004	31,094	31,142	1/05
		2003	31,286	31,283	1/04
		2002	30,991	30,981	1/03
12,369	2.49	2001	30,453	30,903	11/01
		2000	(US Census) 30,711	31,262	11/00
		1999		30,852	11/99
11,965	2.60	1998		30,684	10/98
11,781	2.60	1997		30,396	10/97
11,515	2.65	1996		30,209	10-11/96
11,186	2.65	1995		29,755	10/95
10,912	2.64	1994		29,078	10/94
10,821	2.64	1993		28,791	10/93
10,538	2.76	1992		29,251	10/92
10,451	2.76	1991		28,965	9-10/91
		1990	(US Census) 26,751	29,881	9-10/90

* This number is derived from Assessor records, not the Building Permit data.
DU – Dwelling Unit
PPH – Persons Per Household

Table 2- Building Permit Records	
Year	**No. Res. Units Added**
1997	232
1998	147
1999	138
2000	114
2001	108
2002	153
2003	205
2004	149
2005	142
2006	157
2007	97
2008	55
Total	1,694

One discrepancy is evident. The number of Dwelling Units (DUs) claimed (Assessor) in 1997 was 11,781. Table 2 (Building Permit) shows that 1,694 units were added to the housing stock. These two numbers total 13,475, yet the CDD claims (Assessor) just 13,007 DUs in 2008; so where are the missing 468 DUs? This seems like a large number. There are three considerations.

1. The City does not keep good records of the number of DUs lost over the years. There may be data available, but it doesn't show up in the two City sources used to develop the tables above.
2. The Building Permit information is based on permits issued and may not reflect how many units were actually built. A discussion with Debra Purves, the CBJ Building Official, suggests this is unlikely to account for very many units. By the time a developer is all the way to the end of the Building Permit process, there has been a significant amount of time and money spent on planning and design and so the incentive to finish the project is high.
3. CDD's DU totals for building permits processed in 2008 were reviewed by Walsh Planning & Development Services and found to be somewhat inaccurate. Some building permits were listed as showing production of a new DU when in fact they did not. Some projects were remodel efforts that were listed as creating new units but in fact did not. One project clearly removed an apartment from a house, lowering the inventory by one.

The larger question though, is if there are were 28,965 people living in Juneau in 1991 in 10,451 DUs, and in 2008 there were 13,007 DUs housing 30,947 people (and this after the population had actually been larger, topping out in 2005 according to both DOL and CDD); then how can so few people inhabit so many homes? The answer is in two parts, Persons Per Household (PPH) and vacancy rates. The former is lower than in 1991 and the latter is much higher.

Table 3 - Occupancy and Vacancy Data							
	No. DU	Vac. Rate	Occupied Units	Multiply	Persons per Household	Gross Derived Population	Corrected After Summing Subarea Calculations
1991	10,451	1.20%	10,325	X	2.76	28,497	28,965
2008	13,007	3.55%	12,546	X	2.48	31,114	30,947
NOTE: The reason for the difference between the "Gross" and "Corrected" populations is that CDD performs the Vacancy/PPH calculation for each of nine subareas in the City and sums the products of those calculations. The Gross column above is the product of the summary numbers in the table							

Juneau had a housing shortage in 1991 (and anecdotally, has had since anyone can remember) causing the higher PPH and very low vacancy rates. It was a seller's market. Other data show an aging of the population, which indicates that there were more children in homes in 1991 compared to 2008. As the children moved out and started their own households, the parents stayed on as well, thus lowering the PPH.

A true buyer's market is generally said to reflect a 5 percent vacancy rate. In 2008 Juneau was getting close. Apartments (4.42 percent) were near 5 percent and duplexes (7.29 percent) were considerably higher; but the gold standard – the detached single-family home – only reached 2.16 percent[2]. Local real estate agents say this is enough to cause sellers to be "negotiable" and home prices did fall slightly in 2008.

The 2008 year was an instructive one for housing analysis. According to a real estate broker whose firm handled 20 percent of the transactions in 2008, there were 284 residential sales in Juneau during that year, including condominiums, townhouses, attached homes, and detached single-family homes. The broker's estimate was that 75 percent of the buyers were people who already lived in Juneau and wanted to upgrade (or perhaps downgrade to reflect smaller family size) from previous quarters.

2.2 Future CBJ Trends

The recent past might seem to portend a glum development future for Juneau. This will be explored further below, but the *need* for additional housing should also be examined. The CBJ conducted a housing study recently. The key standard for assessing housing affordability, as set forth in the study, is as follows:

> "For a homeowner, the mortgage, private mortgage insurance, homeowners' association fee, and taxes, plus essential utilities, should not exceed 30% of the household's income."[3]

A similar standard is set for renters. The report goes on to say that in 2000, "approximately 37 percent of CBJ *renter* households paid more than 30 percent of their income for shelter and about 17 percent of *owner* households paid more than 30 percent of their income for shelter." (Emphasis in the original)

[2] All of these vacancy factors came from CDD's 2008 population estimate.

[3] The report does not specify whether this is gross income or net take-home pay. Discussions with local bankers show bank policy of 30 percent, or less, of the gross is needed to qualify for a mortgage. The 30 percent is to cover the mortgage, all insurances, homeowner's fees, and taxes. It does not include utilities.

Oddly, the report goes on to say these figures did not include the costs of essential utilities such as home heating, power, water, sewer, and garbage service. Obviously, if the essential utilities were included, the number of renters and owners who pay too much would be higher still, especially considering the recent price hikes in fuel oil. Neither standard addresses fire and liability insurance.

Two other standards relating to the health of the housing stock relate to safety/sanitary conditions and overcrowding. The report says Juneau is doing well regarding these standards, but clearly not in the affordability department. Finally, after some hedging, the report declares that "an addition of 750 to 1,000 units in the near term would probably significantly ease the cost burden on Juneau households."

The CBJ report does not specify what kind of additional units should be supplied and it should be clear that this is an expression of need based on affordability - not necessarily market demand. In general, it is safe to say that as long as there is an assured variety in the units – ranging from rental apartments through large, detached single-family homes – then Juneau's housing affordability problem would be addressed by additional development. The report goes on to address ways and means to expand the housing inventory. The original purpose for this traffic study – to rezone a large area of land soon to be served with sewer along NDH – will definitely serve to help meet the report's goals. The CBJ is serious about expanding the housing stock, having already taken several actions to encourage developers to produce affordable units.

Finally, on the subject of housing, the conclusion is apparent that even with little or no population growth, there is still pressure to build more dwelling units to address that part of the population that wants to upgrade (or perhaps just live in a different location), and to address that part of the population that does not have enough affordable housing options.

Population growth has been slow in Juneau. Just how slow depends on which starting point is used. The DOL estimates are never exactly the same as CDD's but they are much closer in recent years. At the common starting point on Table 1, 1990, there is a much wider discrepancy. DOL uses the U.S. Census for years ending in zero and the number in 1990 was 26,751. CDD's estimate for 1990 was 29,881, a difference of 3,130 people.

The highest population, according to both CDD and DOL, was in 2005. Using DOL numbers, the population grew by 4,431 people from 1990 to 2005. According to CDD, the population grew by about 1,312 people over the same 15-year period. The DOL numbers indicate a growth rate of 1.04 percent per year compounded annually. The CDD growth rate works out to about 0.3 percent per year.

CDD and the DOT&PF have typically used growth rates of 1.0 to 1.5 percent per year for planning purposes. Merging the DOL and CDD numbers to arrive at an anticipated growth rate is mathematically awkward, and the past does not always foretell the future. Even so, there are anticipated events that may help a projection:

- Opening of the Kensington Mine will require 300 workers to finish construction and begin operations. Construction could finish in mid-to-late 2010, at that point the permanent mine population is expected to be about 200, which will generate another 170 indirect jobs. The 370 total jobs could reflect a population increase of 500 to include spouses and children.
- The Juneau access road, now called the Lynn Canal Highway, will generate construction jobs for many years if it goes forward. There is still doubt over whether the project will ever launch, but it is

state and local policy that it should. DOT&PF has stated the intention that the work will be broken up into small increments that will allow local and regional contractors to bid on the job. The Final Environmental Impact Statement (EIS) for the road estimates that direct, indirect, and induced employment will total 360 jobs. The project will go on for several years – at least 5 and potentially as long as 12.

- The Alaska state budget looks flat for the immediate future but if the price of oil stabilizes post-recession, and the gas pipeline draws closer to reality, it can be expected that the Juneau-based state employee work force will grow modestly.
- The price of gold is higher at present than it has been for decades. If the mining industry sees the price stay high, then interest in other mines could be sparked. The Tulsequah Chief Mine up the Taku River is slated to start up in 2009. A few local direct jobs will be created, and the mine's developer expects to spend about $25 million a year in Juneau (mostly on commodities), which will generate some indirect jobs. There are many other historic mine sites, which are still believed to contain valuable ore. Foremost of these is the AJ Mine, which was the subject of much endeavor during the late 1980s and the first half of the 1990s, sparking a lot of economic activity just in the exploration, planning, and permitting effort.
- Juneau has many amenities and appears to be a reasonably attractive place to retire. Many who have lived here during their careers continue to stay after retiring. Certainly the City and Borough of Sitka has enjoyed this status, even to the point where people from out-of-town have arrived to retire.
- There is also a pattern of in-migration from the smaller outlying communities that are having economic problems of their own.

All of the foregoing suggests that the current decline may be short and that modest growth can be expected in the next 20 years. A merged DOL/CDD derived growth rate of 0.7 percent might actually reflect reality, but working with a slightly higher rate will ensure that traffic is not under-projected. So, Table 4 is based on a 1.0 percent population growth rate. However, the housing growth rate is based on a higher number. As noted above, there are higher vacancy rates and lower occupancy rates today than 18 years ago. From 1990 to 2000, housing grew at almost 1.8 percent. From 2001 to 2008 the rate dropped to less than 1.0 percent. For the future, given natural growth, new industry, and community pressure to make housing more affordable, a housing growth rate of 1.2 percent was used.

Table 4 was compounded on an annual basis. The population for each year is 101.0 percent of the preceding year and the housing units for each year are 101.2 percent of the number for the preceding year.

Table 4 - Population and Housing Growth Projection

Year	Pop. @ 1.0%/yr.	Dwelling Units @ 1.2%/yr
2009	*31,247	**13,062
2010	31,559	13,219
2011	31,875	13,377
2012	32,193	13,538
2013	32,516	13,700
2014	32,840	13,865
2015	33,169	14,031
2016	33,501	14,200
2017	33,836	14,370
2018	34,174	14,542

Table 4 - Population and Housing Growth Projection		
Year	**Pop. @ 1.0%/yr.**	**Dwelling Units @ 1.2%/yr**
2019	34,516	14,717
2020	34,861	14,894
2021	35,210	15,072
2022	35,562	15,253
2023	35,917	15,436
2024	36,276	15,622
2025	36,640	15,809
2026	37,006	15,999
2027	37,376	16,190
2028	37,750	16,384
2029	38,127	16,580
2030	38,509	16,779
*Taken from the 2008 CDD estimate with a 300 increase due to start up of the Kensington. ** These are the 2008 (May) numbers plus the building permits issued that year.		

This indicates 1,832 new units will be added between 2010 and 2020, and an additional 1,885 new units between 2021 and 2030[4]. The question arises, what kind will they be? The percentage of high-density units like condos and apartments is sure to go up because there is so little land available for lower-density developments. According to its population estimate, CDD describes the distribution of housing types in 2008 as follows (Table 5):

Table 5 - Housing Mix in 2008		
Housing Type	**Total Units**	**% of Whole**
Single-family (SF)	5,735	44.09
Apartments (SF)	683	5.25
Duplex	580	4.46
Zero-Lot	826	6.35
Condo/Townhouse	1,184	9.10
Multi-Family	2,666	20.49
Mobile Home	1,237	9.52
Boats	89	0.68
RVs	7	0.06
Total Housing Units	13,007	100.00

Some further background will set the stage for estimating the future housing mix. The CBJ requires public sewer and water for any development that is denser than one unit per acre. There are several areas north of Auke Bay that are in private ownership and have been developed at this density, and several areas also in private ownership that could be so developed in the future. This is the most land-consumptive and least affordable form of residential development. Traditional neighborhoods in the utility-served areas of town are developed at densities of three to five units per acre. These are the D-3 and D-5 zoning districts, which also allow duplexes and zero-lot line structures. There is a land penalty for the double units. In D-3, the minimum lot size for a single-family unit is 12,000 square feet. A

[4] Despite the difference in growth rates, the change in PPH is very small. It will shrink from 2.39 in 2009 to 2.29 in 2030, according to the table.

double unit requires 18,000 square feet. For D-5, the single unit minimum is 7,000 square feet and a double unit needs 10,500 square feet.

This kind of development is most easily done on flat dry land, and the east Mendenhall Valley (east of the Mendenhall River) has become Juneau's primary traditional residential area since it is served with both water and sewer. There is relatively little un-built area left in the east valley but sewer has now been extended to the upper west valley along Back Loop Road, and D-3/D-5 development is proceeding there, albeit at a slow pace. There are also sloping areas supporting D-3/D-5 developments, with Mountainside Estates and West Juneau as the primary examples. These homes have views as well as higher development costs and are less affordable than those in flat areas. There is some room for further growth in both areas but the homes will be expensive, generally over $500,000.

So, the first factor to consider is the increasing scarcity of flat, dry land that is served with public water and sewer. A second factor is the general increase in the cost of building materials ranging from sand to concrete and lumber. A third factor is that the CBJ land use code now provides more options for smaller homes. These are:

1. The Planned Unit Development (PUD) code that allows higher-density, i.e., smaller lots, in exchange for creating public areas and parks to be shared by the development's residents. There is no limit on the house size for PUDs.
2. The Cottage Housing code, similar to PUDs, where there are shared amenities but no real lot associated with the house. Each house would be a single unit, but limited to 1,200 square feet on two floors.
3. Bungalow housing, which will allow small homes no greater than 1,000 square feet to be built as infill on pre-developed lots.

All three of these new options provide that each unit can be bought, thus allowing the owner to gain equity just as in traditional housing, but the land is managed by the community association in the same way as a condominium association. All three would allow the feel of single-family homes in much denser developments, thus providing more affordable homes than traditional single-family developments.

A fourth factor is recent local trends in housing type development. The period from 2001 to 2008 may be more instructive than the earlier housing history. The housing mix in 2001, compared with that of 2008 in percentages, is demonstrated in Table 6:

Table 6 - Housing Mix Comparison: 2001-2008

	Housing Mix in 2001		2008
Housing Type	**Total Units**	**% of Whole**	**% of Whole**
Single-family (SF)	5,323	43.06	44.09
Apartments (SF)	587	4.76	5.25
Duplex	572	4.48	4.46
Zero-Lot	774	6.28	6.35
Condo/Townhouse	1,098	8.89	9.10
Multi-Family	2,628	21.26	20.49
Mobile Home	1,225	9.93	9.52
Boats	129	1.06	0.68

Table 6 - Housing Mix Comparison: 2001-2008			
	Housing Mix in 2001		2008
Housing Type	Total Units	% of Whole	% of Whole
RVs	33	0.28	0.06
Total Housing Units	12,369	100.00	100.00

As can be seen, no meaningful trend is apparent (except for RVs). What can be expected, given the other factors cited, is that more of the single-family detached dwellings will be of the smaller size now contemplated in the land use code. With that, the projections for the future can be estimated based on the current mix. For 2020 and 2030, the distributions of new units are expected to be as follows (Table 7):

Table 7 - Housing Mix Comparison, New Units: 2020 to 2030				
	Housing Mix in 2020, New Units		Housing Mix in 2030, New	
Housing Type	Total Units	% of Whole	Total Units	% of Whole
Single-family (SF)	808	44.09	831	44.09
Apartments (SF)	96	5.25	99	5.25
Duplex	82	4.46	84	4.46
Zero-Lot	116	6.35	120	6.35
Condo/Townhouse	168	9.10	172	9.10
Multi-Family	375	20.49	386	20.49
Mobile Home	174	9.52	179	9.52
Boats	12	0.68	13	0.68
RVs	1	0.06	1	0.06
Total Housing Units	1,832	100.00	1,885	100.00

The 2020 projection added to the 2030 projection accounts for all of the 3,717 new housing units expected to be built in Juneau by 2030.

2.3 North Douglas Projections

Now the question of how many of these new units would or could be built along NDH can be addressed. First, it appears that the entire length of NDH, out to Bonnie Brae, will eventually be served with sewer before 2020. The current sewer project, to be completed in 2009, will start at the Douglas Bridge and extend about 1-mile northwest, ending at 4300 North Douglas Highway. A second phase, funded and planned for 2010, will go at least as far as the Channel View Terrace mobile home park. What remains is a third phase to connect the rest of the way to Bonnie Brae, which is already served with public sewer. This is not funded but is seen by CBJ Engineering to be reasonable for near-term completion and thus is assumed to be built for our projections.

2.4 Section One: Kowee Creek to End of 2009 Sewer Extension

This area, on the uphill side of the highway, is specifically addressed in the 2008 update of the CBJ Comprehensive Plan as a transition area that is to be given high-density residential zoning when sewer is available. The area beyond is not given any transitional status. The Comprehensive Plan shows Section One as transitioning from "Urban Low-density Residential" to "Medium Density Residential." In zoning terms, this has the practical effect of changing from a one unit per acre limitation (forced by lack

of sewer, not zoning) to one or more of three higher-density options: 10 units per acre, 15 units per acre, or 18 units per acre. This analysis will address development potential as if the entire area uphill of NDH is rezoned to one of the three classifications. The uphill area is a band of land about 1,200 feet wide and almost a mile long.

The area on the water side of Section One is not shown as transitional, meaning it would keep the zoning it has now – D-3. There are 31 individual parcels on the water side of Section One. All but 5 have houses on them, sometimes duplexes. The arrival of sewer will enable more duplexes, or apartment additions to single-family homes. There is one tract that has about 600 feet of frontage on the highway and might be seen to have subdivision potential, but this is made difficult by the CBJ rule that requires new lots to front on residential streets, not arterials, which is the classification of NDH. There are topographic challenges as well. The overall growth potential for this tract is no more than 20 new units

The uphill side of Section One has the most significant growth potential. The rezone application submitted in July 2008 was specific to Parcel 1 and Parcel 5 (see Figure 2). It is anticipated that the City will expand the request to include the entire area between those two parcels and actually, a little further; one parcel short of the area presently zoned General Commercial. This would have the effect of rezoning Parcels 2, 3, and 4 as well as all of the smaller lots – nearly all of which have been developed with single-family houses. The five major parcels are vacant save for Parcel 3, which has a church building on it. The rezone application requests change to D-18, or 18 units per acre. This is typical for apartments, condominiums, row houses, townhouses, and for the new DU types envisioned in the City's new cottage and bungalow housing options.

> Parcel 1: 86 acres. No direct access to an existing street. There is an access agreement with the owner of Parcel 4 and a pioneer road, with gate, has been built across Parcel 4 and across the lower portion of Parcel 1. This is shown on Figure 1. A DOT&PF driveway permit was obtained for the driveway intersection with NDH, and sight distance was evaluated at that time. The pioneer road was built to meet CBJ grade and curve requirements and can easily be finished as a public street.
>
> The upper portion of Parcel 1 may be very difficult to develop because of steep slopes and perched wetlands. Legal density for a given parcel is calculated on the basis of how much land is available *after the land needed for right-of-way (ROW) is deducted.* A rough layout of roads for Parcel 1 indicates that up to 8 acres of ROW would have to be dedicated. Rough development considerations that account for wetlands and steep slopes produce another 20-acre penalty leaving 58 acres for density calculation. This produces a development potential of 1,044 DUs if rezoned to D-18.
>
> Parcel 2: 6 acres. Has direct adjacency with NDH. Moderate uphill slope with view potential. This parcel could be developed with a public street. Doing so would probably consume an acre, producing development potential of 90 units. The potential rises to 108 units if no public road is dedicated. There is a possibility that street development on Parcel 2 could be designed to facilitate access to USS 569, and lots 4, 5, and 6 to the west of Parcel 2, which are presently land locked. (There appears to be an unconnected section of ROW in front of these three lots and so there would be no ROW deduction penalty for the three.) Lot 5 presently has a duplex on it, accessed by a long driveway across the private land between it and NDH. Together, these three

lots comprise 148,104 square feet. At D-18, the three lots could host 61 DUs; a total of 151 units supplying traffic to the intersection location shown for Parcel 2.

Parcel 3: 4.23 acres. The parcel has two potential access locations to NDH. The arrow on the map points to an existing driveway. There is a 6,048 square foot building presently in use as a church. The property has a moderate uphill slope with view potential. The slope is too steep to allow convenient development with internal public streets, so the most likely high-density development scenario is as an apartment or condominium facility. At D-18, the parcel could host 76 DUs.

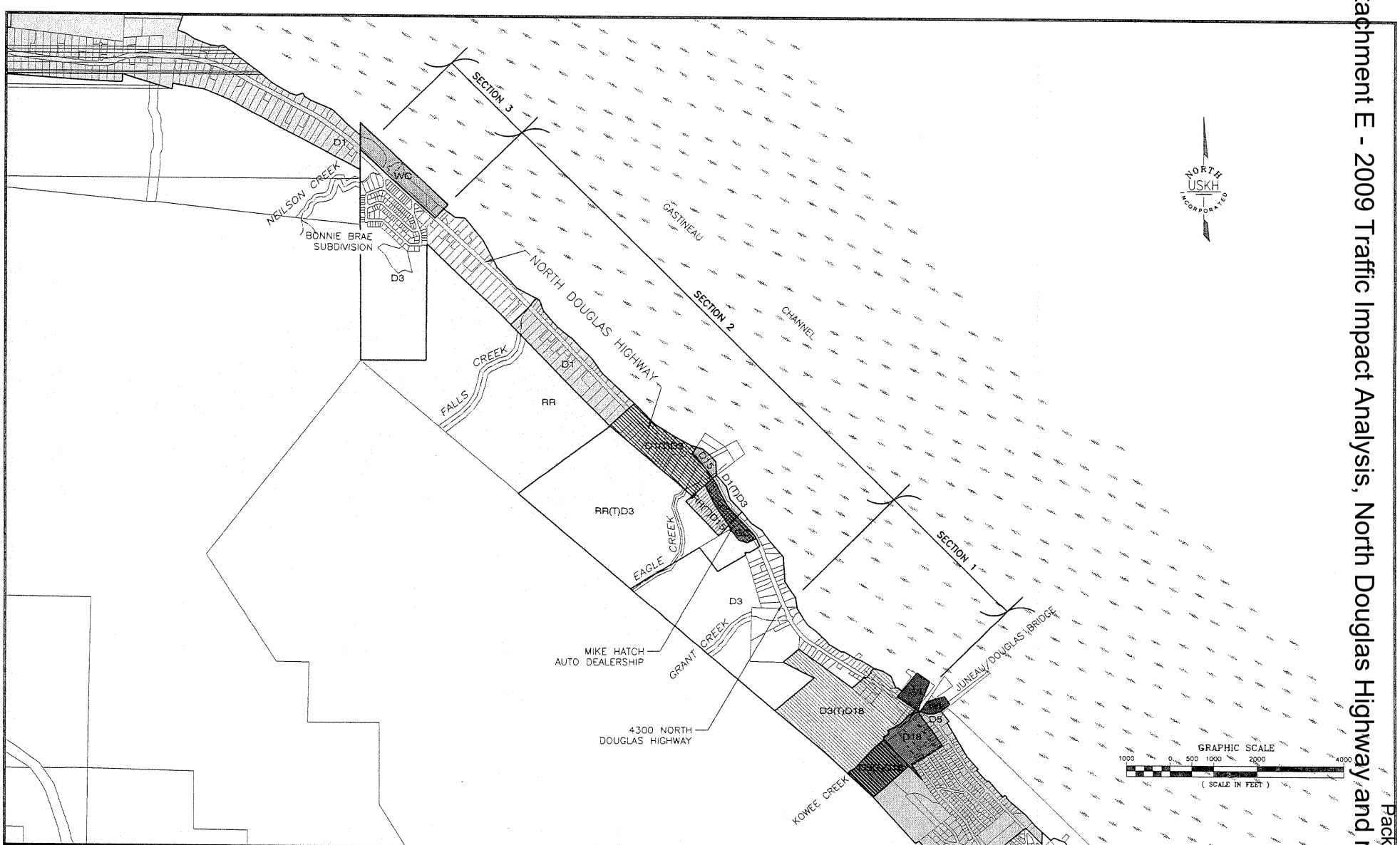

FILE: \\978801\Dwg\C\Figures\978801 Figure 01.dwg			
REV.	DATE	BY	DESCRIPTION OF CHANGE
RECORD OF REVISIONS			

DATE: 7/17/09
DESIGN: NCL
DRAWN: WJP
CHECKED: WW

USKH Architecture • Engineering
Land Surveying • Planning
3031 Clinton Drive, Suite 200
Juneau, Alaska 99801
907/790-2901
907/790-3901 (fax)
USKH WO# 978801

CITY AND BOROUGH OF JUNEAU
★ ALASKA'S CAPITAL CITY
DEPARTMENT OF ENGINEERING

NORTH DOUGLAS HIGHWAY REZONE
TRAFFIC IMPACT ANALYSIS

STUDY AREA MAP

FIGURE NO.

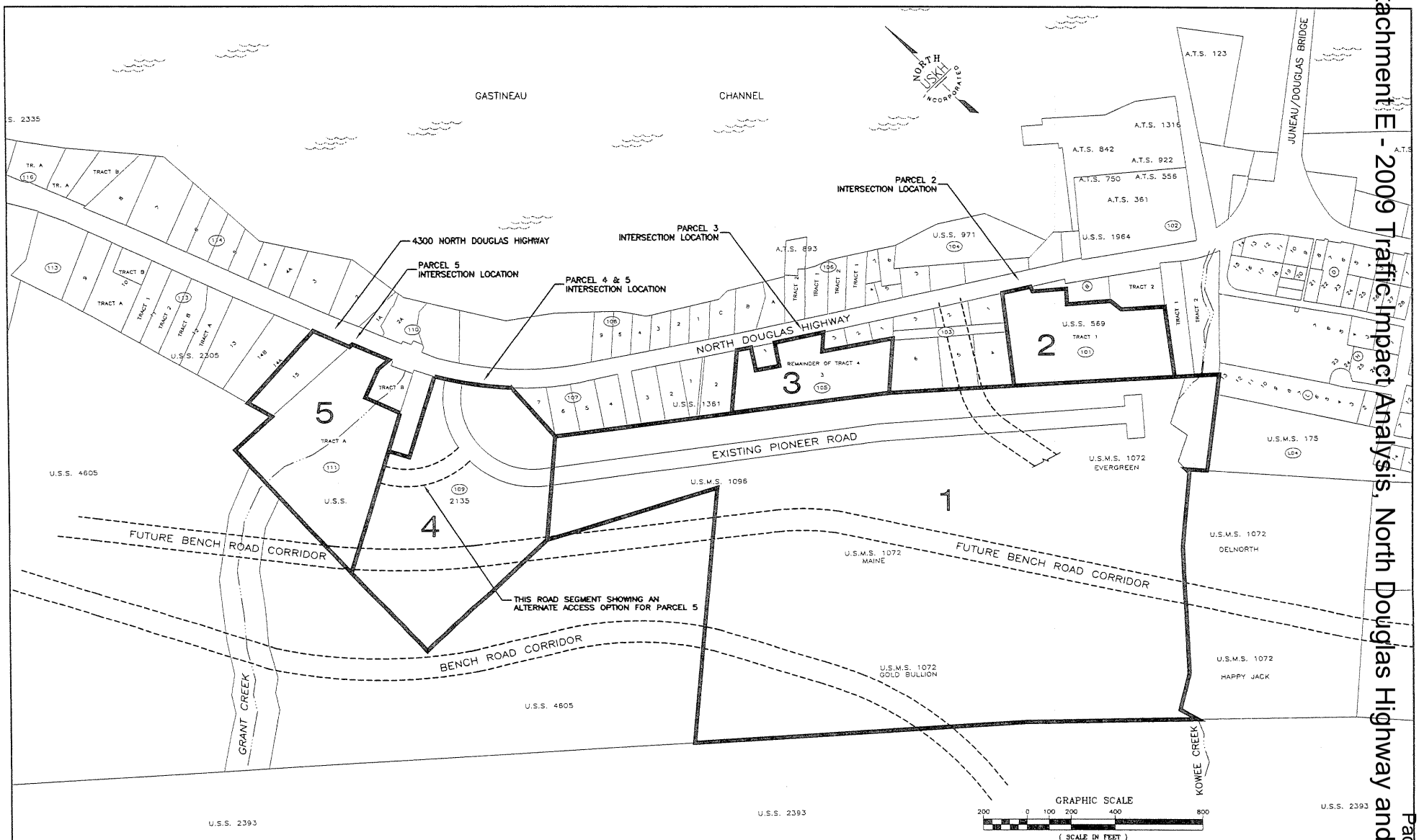

REV.	DATE	BY	DESCRIPTION OF CHANGE

RECORD OF REVISIONS

FILE: I:\978801\Dwgs\C\Figures\978801 Figure 02.dwg

DATE: 7/17/09
DESIGN: NCL
DRAWN: WJP
CHECKED: WW

USKH
Architecture • Engineering
Land Surveying • Planning
3031 Clinton Drive, Suite 200
Juneau, Alaska 99801
907/790-2901
907/790-3901 (fax)
USKH WO# 978801

CITY AND BOROUGH OF JUNEAU
★ ALASKA'S CAPITAL CITY
DEPARTMENT OF ENGINEERING

NORTH DOUGLAS HIGHWAY REZONE
TRAFFIC IMPACT ANALYSIS

SECTION 1
KOWEE CREEK TO END OF 2009 SEWER EXTENSION

FIGURE NO.

Parcel 4: 17 acres. This parcel has an easy uphill slope and has been developed with the pioneer road leading to Parcel 1. If developed as shown, about an acre of land would be lost to ROW leaving 16 acres to calculate density. This would enable the parcel to host up to 288 dwelling units at D-18 zoning.

Parcel 5: 10.4 acres. The parcel also has an easy uphill slope. Present development planning shows a direct street intersection with NDH. That same planning has resulted in a trial road layout that would consume 1.4 acres of land, leaving 9 acres for density calculation. At D-18, the parcel could host 162 units.

Alternative for Parcels 4 and 5: There may be reluctance to have two public street intersections so close together; as would be the case if both Parcels 4 and 5 were developed independently. An option would be to extend access from Parcel 4 over to Parcel 5 uphill from NDH (see Figure 2). This additional length of road would deduct about nine units from the full build-out potential for Parcel 4. The result, however, would be a street intersection with NDH that supports traffic from Parcels 1, 4, and 5. At full build-out, this could be traffic from 1,485 dwelling units. By contrast, the Cordova Street intersection with Douglas Highway receives traffic from 390 dwelling units, (approximately 210 SF DUs and 180 apartment units.)

At present, it is expected that all of the land will convert to D-18. There are, however, options for lower-density zones such as D-15 and D-10. It is possible that the City could resort to lower-density zones as a compromise. Table 8 shows the development potential under each scenario.

Table 8 - Section One, Uphill Side, Development Potential Scenarios

Parcel	Usable Acres	No. DU @ D-10	No. DU @ D-15	No. DU @ D-18
1	58	580	870	1,044
2	6	60	90	108
3	4.23	42	63	76
4	16	160	240	288
5	9	90	135	162
Totals	77.53	932	1,398	1,678

2.5 Section Two: End of 2009 Sewer Extension to Bonnie Brae

The water side has a short multi-family area containing two mobile home parks and a small apartment building. These have been on private sewer for many years and were created long before the modern CBJ land use code. The arrival of public sewer would increase the development potential, but probably not by much since the mobile home units already cover most of the usable land. The apartment building could be enlarged somewhat but it sits on a very small parcel. Further out, there are 64 waterfront single-family parcels, of which only 5 are vacant. There is potential to add apartments to the single-family homes but otherwise there is just no meaningful amount of land to develop.

The uphill side has 74 parcels, of which 11 are vacant. Many are the result of "panhandle" subdivisions where a single, wide and deep parcel is cut into two lots, one behind the other and they share a single driveway for access to NDH. There are 34 lots configured this way, and an additional 21 that are large enough to divide as well. This produces the potential for 21 additional lots, most of which would be

large enough to host a duplex. That, plus the ability to add apartments and the vacant lots add up to a potential increase of 60 units over the next 20 years.

2.6 Section Three: Bonnie Brae-Subdivision and the Commercial Area on the Water Side

The water side is zoned Waterfront Commercial, a fairly limited category where most development must be related to the water in some way. Apartment buildings are not allowed, but hotels and motels are. Single-family homes and duplexes are allowed, as are subdivisions. The parcels are narrow and the residential road requirement discussed above would make subdividing for residential purposes very challenging. Finally, there are two large parcels. One is the ERA Helicopters base and they are not likely to be willing to redevelop their parcel. The other parcel is undeveloped, but its owners have been discussing commercial options with the CBJ.

The uphill side is Bonnie Brae subdivision, which contains 112 dwelling units, mostly in zero-lot line configurations, and 12 vacant lots. All of the vacant lots have the potential to add 2 units so there is an immediate opportunity to build 24 more units on lots that already have street frontage and utilities. Interestingly, there is a 98-acre parcel above Bonnie Brae that is left over from the original subdivision. Within this parcel is another 6.6-acre area designated as a park site and the CBJ is shown as a co-owner. The other 91.4 acres likely have some development potential but also contain a lot of forested wetlands and muskegs. Moreover, a new access route would most likely be required to connect the undeveloped area to NDH. The existing Bonnie Brae entrances might allow some modest development of the area immediately adjacent to the upper portion of Bonnie Brae, but not for the potentially hundreds of lots that could be created with road access. Absent a new road, there is probably potential for another 50 units.

2.7 Summary

The overall population and housing growth projections above estimate the demand for 3,717 new dwelling units over the next 20 years. The three sections of NDH under this analysis would be able to host nearly half of those. Absent some dramatic new availability of land, such as on West Douglas, there is every likelihood that the development predicted for North Douglas will occur.

Table 9 - Development Potential, Kowee Creek to Bonnie Brae					
		Existing DU	New DU Potential		
Section One	Water Side of NDH	27	20		
	Uphill Side of NDH	32	D-10	D-15	D-18
			580	870	1,044
			60	90	108
			42	63	76
			160	240	288
			90	135	162
Section Two	Water Side of NDH	115	20	20	20
	Uphill Side of NDH	63	60	60	60
Section Three	Water Side of NDH	2	10	10	10
	Bonnie Brae Sub.	112	74	74	74
	Totals	351	1,116	1,582	1,862

The CBJ Engineering Department issued a conceptual design and technical report for the North Douglas sewer project in 1998. This document presented a 30-year population forecast that coincides with the 20-year planning horizon for the re-zone study. The sewer study included nine zones, the first four of which include the re-zone study area limits. The sewer study provides estimates for the design year (2028) population and full build-out, or saturation, population. Table 10 summarizes developable land area, the potential mix of DU types, and population projections from the sewer study. The sewer study predicted a growth in housing units of 219 housing units from 1998 to 2028, and a saturation-level increase of 1393 housing units.

The growth of 1,116 to 1,862 housing units reported in this Development Projection Summary is more in line with the saturation projections than the 2028 forecast in the sewer report.

Table 10 - North Douglas Sewer - Growth Projection Summary							
Zone	Undeveloped Land (Acres)	Existing (1998)		Design (2028)		Saturation	
		DU	Population	DU	Population	DU	Population
1	214	80	223	112	312	510	1,564
2	145	48	260	133	370	297	860
3	264	87	242	119	332	328	947
4	150	81	226	151	421	554	1,567
Totals	773	296	951	515	1,435	1,689	4,938
Source: North Douglas Sewer Conceptual Design and Technical Report, CBJ Engineering Department, December 1985							

3 TRAFFIC ANALYSIS

This section describes existing traffic conditions, and projected traffic conditions in the year 2028 with the development of the NDH corridor area. It is organized into sections that describe: project trip generation and assignment; 2028 with-project volumes; and future LOS.

3.1 Trip Generation and Distribution

Trip generation for this project was based on the methodologies outlined in the Institute of Transportation Engineers (ITE) *Trip Generation Manual.* The ITE *Trip Generation Manual* is a nationally recognized and locally accepted method for estimating the travel characteristics of homes and businesses. Trip generation was determined by creating a composite trip generation rate based on the variety of possible developments that are expected to take place along NDH.

Table 11 below outlines the land uses that were used to calculate the composite trip generation rate.

Table 11- ITE Land Uses and Descriptions

Land Use	Description
210: Single-Family Detached Housing	All single-family detached homes on individual lots. Typical subdivision.
220: Apartment	Rental dwelling unit with at least three other dwelling units. Typical four-plex.
221: Low-Rise Apartment	Rental dwelling units located in rental buildings that have one or two levels.
223: Mid-Rise Apartment	Rental dwelling units located in rental buildings that have between three and ten levels.
230: Condo/Townhouse	Residential ownership units that have at least one other unit in the same building structure.
231: Low-Rise Condo/Townhouse	Residential units located in buildings with one or two levels.
270: Residential PUD	Residential planned urban development is a combination of residential land uses.

All land uses described in the Table 11 were used to determine two composite trip generation rates. Composite Rate A was based on land uses 210, 220, 221, and 270. This rate was then applied to all development proposed on the water side in Section One of NDH, all of Section Two and Section Three. Composite Rate B was based on land uses 220, 221, 223, 230, and 231. This rate was applied to all development proposed on the uphill side of NDH for Section One only. The trip generation rates equate trip generation to the number of dwelling units.

After the composite trip generation rates were calculated, they were applied to the projected number of new dwelling units described earlier in this report in Table 9. Trips for three different scenarios were calculated based on the different zoning options available, including: D-10, D-15, and D-18. The trips calculated for areas on the water and uphill sides of NDH were combined to determine the total new trip generation for both the AM and PM peak hour conditions.

A summary of trip generation projections for NDH is shown in the following tables for the weekday AM and PM peak hours. Table 12, Table 13, and Table 14 outline the trip generation for the D-10, D-15, and D-18 development scenarios, respectively.

Table 12 - Project Trip Generation, D-10 Zoning

	Dwelling Units	AM Peak Hour Trips			PM Peak Hour Trips		
		In	Out	Total	In	Out	Total
Composite Rate A	184	23	80	103	85	45	129
Composite Rate B	932	102	342	444	339	199	539
Total							

Source: ITE Trip Generation Manual (8th Edition)

Table 13 - Project Trip Generation, D-15 Zoning

	Dwelling Units	AM Peak Hour Trips			PM Peak Hour Trips		
		In	Out	Total	In	Out	Total
Composite Rate A	184	23	80	103	85	45	129
Composite Rate B	1,398	153	512	665	509	299	808
Total							

Source: ITE Trip Generation Manual (8th Edition)

Table 14 - Project Trip Generation, D-18 Zoning

	Dwelling Units	AM Peak Hour Trips			PM Peak Hour Trips		
		In	Out	Total	In	Out	Total
Composite Rate A	184	23	80	103	85	45	129
Composite Rate B	1,678	184	615	799	611	359	970
Total							

Source: ITE Trip Generation Manual (8th Edition)

3.2 Trip Distribution and Forecast Traffic Volumes

Trip distributions from the proposed development were estimated based on existing turning movement distributions at the Douglas roundabout and at the 10th and Egan intersections. As such, 10 percent of project trips are expected to/from Douglas, thus traveling straight through the Douglas Highway/NDH roundabout. The remaining trips cross the bridge and diverge at the Egan Drive/10th Street intersection. At this point, 25 percent of total project trips are expected to/from the north on Egan Drive (toward the Mendenhall Valley), 5 percent to/from the east on 10th Street, and 60 percent to/from the south on Egan Drive (toward downtown).

Project trips were then assigned to the study area based on the distribution assumptions. Typically, a growth rate is applied to existing traffic and added to project generated trips. A growth rate was not used in this case because Juneau has not shown any significant traffic growth in the past several years. The project trip assignments were combined with existing traffic volumes for both the AM and PM peak hours.

3.3 Traffic Operations

Traffic conditions were evaluated for this study using the Level of Service (LOS) methodologies of the *Highway Capacity Manual* (Transportation Research Board, 2000). The *Highway Capacity Manual* (HCM) is a nationally recognized and locally accepted method of measuring traffic flow and congestion for intersections. Criteria range from LOS A, indicating free-flow conditions with minimal vehicle delays, to LOS F, indicating congestion with significant vehicle delays.

LOS for a signalized intersection is defined in terms of the average delay experienced by all vehicles at the intersection, typically over a specified time period such as a peak hour. Threshold values are listed in Table 15. LOS for roundabout intersections has not been defined by the HCM due to the variety of analysis methods available. However, the National Cooperative Highway Research Program (NCHRP) Report 572 recommends using stop controlled intersection criteria for roundabout LOS. These criteria are shown in Table 15 and are reported by approach. The differing LOS criteria reflect drivers' increased tolerance for delay at signalized intersections.

Table 15- Intersection Level of Service Criteria

Level of Service	Signalized Control Delay (sec/veh)	Roundabout Control Delay (sec/veh)	General Description
A	≤10	≤10	Free flow
B	>10 – 20	>10-15	Stable flow (slight delays)
C	>20 – 35	>15-25	Stable flow (acceptable delays)
D	>35 – 55	>25-35	Approaching unstable flow (tolerable delay, occasionally wait through more than one signal cycle before proceeding)
E	>55 – 80	>35-50	Unstable flow (intolerable delay)
F	> 80	>50	Forced flow (jammed)

Source: Highway Capacity Manual (TRB, 2000)

The Egan Drive and 10th Street intersection is a signalized intersection. The LOS was calculated using Synchro Version 7, Build 793 (Trafficware, 2007). This intersection analysis software tool is based on the methodologies of HCM 2000 and is accepted by DOT&PF. The Douglas roundabout intersection was analyzed using the methodologies presented in NCHRP 572, which is the DOT&PF preferred method. Roundabout delay and LOS are reported as a weighted average for the entire intersection, while the volume to capacity (v/c) ratio is reported for the approach with the highest v/c ratio. Signal statistics are reported as an average for the entire intersection.

3.3.1 Existing Conditions

Existing traffic operations were analyzed as a means of comparison again the trips generated by the development along NDH. Evaluations were conducted based upon existing road geometries and control data noted in the field. Table 16 and Table 17 provide summaries of existing LOS, average vehicle delays, and the v/c ratio.

Table 16- Existing Level of Service Summary – AM Peak Hour

Location	LOS[1]	Delay[2]	V/C[3]
Egan/10th	E	57.0	1.12
Douglas Hwy/NDH	B	12.5	0.77

1. LOS = level-of-service
2. Average control delay for intersection (sec/veh)
3. V/C = volume to capacity ratio

Table 17 - Existing Level of Service Summary – PM Peak Hour

Location	LOS[1]	Delay[2]	V/C[3]
Egan/10th	D	51.0	1.17
Douglas Hwy/NDH	A	8.4	0.65

1. LOS = level-of-service
2. Average control delay for intersection (sec/veh)
3. V/C = volume to capacity ratio

3.3.2 Future Conditions

The intersections were analyzed to evaluate traffic conditions and operations that include the proposed development, based on the forecasts described above. Table 18 and Table 19 provide a summary of the analyses for the AM and PM peak hours, respectively.

Table 18- Future Level of Service Summary – AM Peak Hour

Location	D-10 Development			D-15 Development			D-18 Development		
	LOS[1]	Delay[2]	V/C[3]	LOS	Delay	V/C	LOS	Delay	V/C
Egan/10th	F	103.1	1.30	F	125.9	1.50	F	361.9	3.11
Douglas Hwy/NDH	F	149.7	1.17	F	343.7	1.38	F	519.3	1.52

1. LOS = level-of-service
2. Average control delay for intersection (sec/veh)
3. V/C = volume to capacity ratio

Table 19- Future Level of Service Summary – PM Peak Hour									
Location	D-10 Development			D-15 Development			D-18 Development		
	LOS[1]	Delay[2]	V/C[3]	LOS	Delay	V/C	LOS	Delay	V/C
Egan/10th	F	184.4	2.18	F	244.6	2.58	F	361.9	3.11
Douglas Hwy/NDH	B	13.7	0.71	C	24.2	0.90	E	48.0	1.00

1. LOS = level-of-service
2. Average control delay for intersection (sec/veh)
3. V/C = volume to capacity ratio

Traffic Volumes at these two intersections are portrayed in Figures 3 through 6. AM and PM traffic volumes are shown for the existing conditions along with each of the different levels of development.

The intersections were also evaluated to estimate how much additional traffic could be added before the LOS was reduced to F. At Egan Drive/10th Street, the limiting time was the PM peak hour. The intersection would be able to accommodate an additional 517 entering vehicles before reaching LOS F during the PM peak hour, assuming the signal phase splits could be optimized for the traffic volumes. This corresponds to an additional 184 dwelling units at Composite Rate A plus an additional 666 dwelling units at Composite Rate B.

At the Douglas Highway/NDH roundabout, the AM peak hour was the limiting time, at which time the roundabout would be able to accommodate an additional 334 vehicles before reaching LOS F. This corresponds to an additional 184 dwelling units at Composite Rate A plus an additional 481 dwelling units at Composite Rate B. The Federal Highway Administration states that when v/c ratios on roundabout approaches exceed 0.85, operations tend to breakdown frequently and unpredictably. If the v/c ratio threshold is used to determine roundabout failure, only 126 additional AM peak hour vehicles could be added. This corresponds to an additional 184 dwelling units at Composite Rate A plus an additional 48 dwelling units at Composite Rate B.

Attachment E - 2009 Traffic Impact Analysis, North Douglas Highway and roundabout

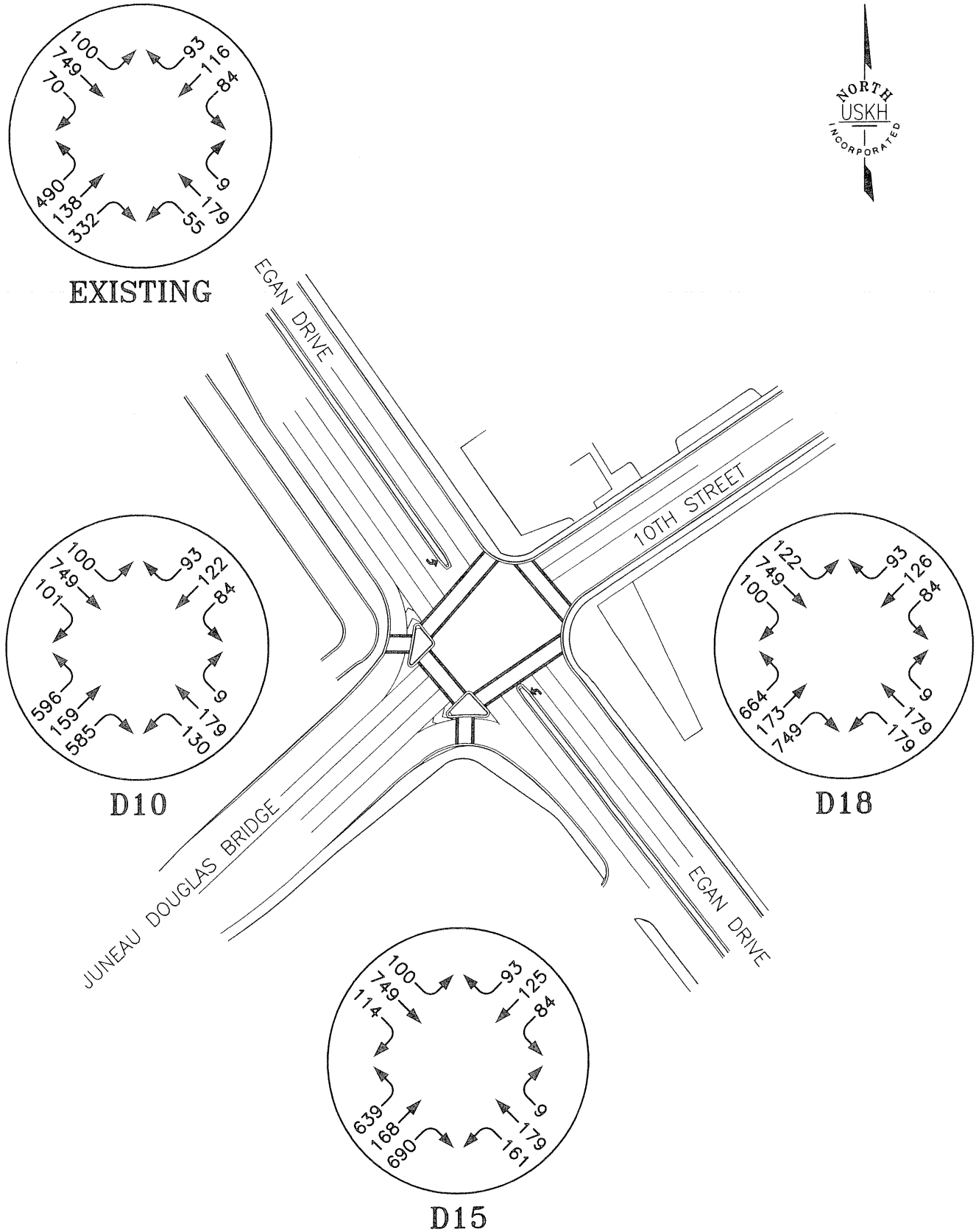

USKH Architecture • Engineering Land Surveying • Planning	CITY AND BOROUGH OF JUNEAU ★ ALASKA'S CAPITAL CITY DEPARTMENT OF ENGINEERING	PROJECT: NORTH DOUGLAS HIGHWAY REZONE TRAFFIC IMPACT ANALYSIS	FIGURE NO.
		TITLE: AM VOLUME DATA FOR 10TH STREET & EGAN DRIVE	3
		CLIENT: CITY & BOROUGH OF JUNEAU	

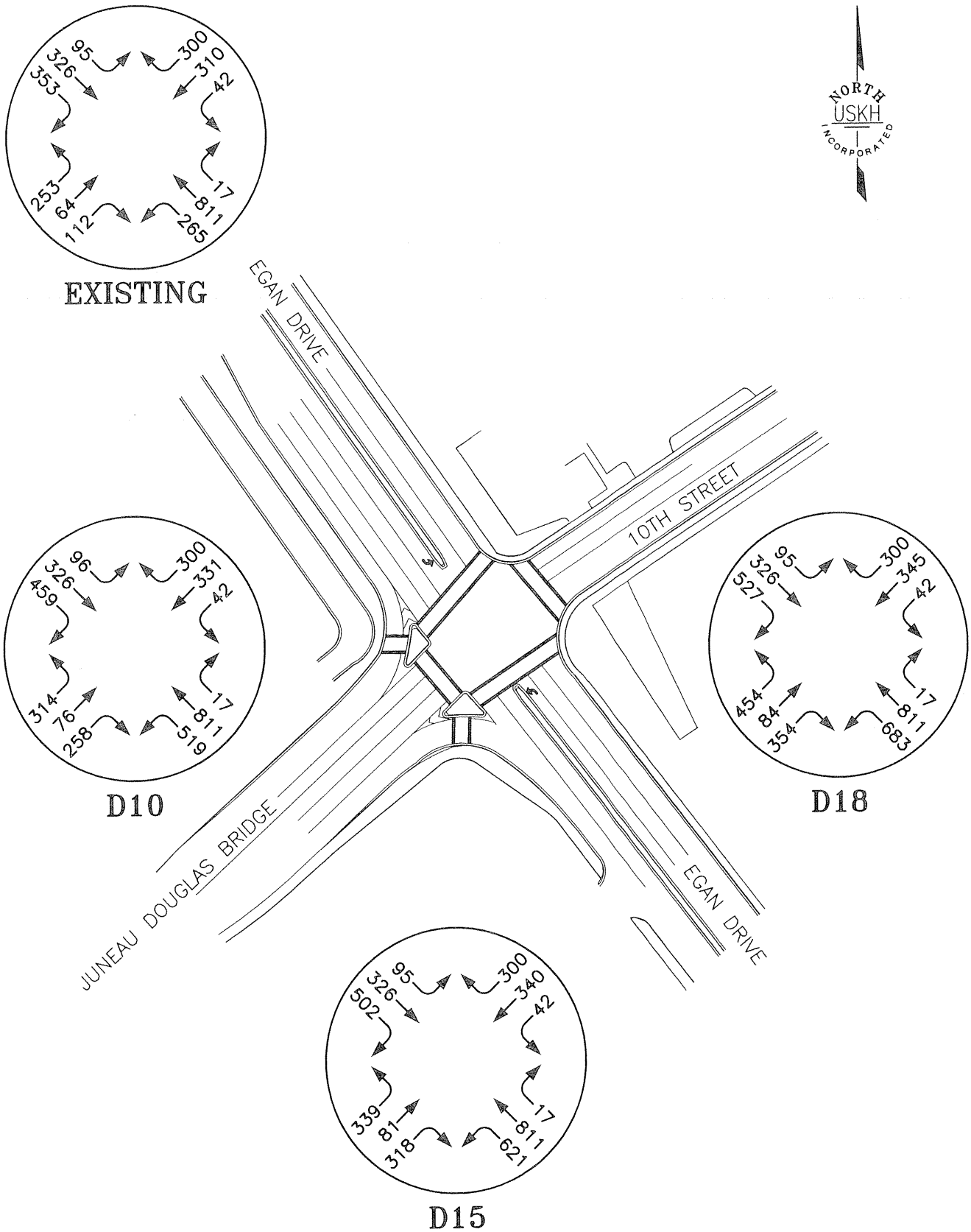

USKH Architecture • Engineering Land Surveying • Planning	CITY AND BOROUGH OF JUNEAU ★ ALASKA'S CAPITAL CITY DEPARTMENT OF ENGINEERING	PROJECT: NORTH DOUGLAS HIGHWAY REZONE TRAFFIC IMPACT ANALYSIS	FIGURE NO.
		TITLE: PM VOLUME DATA FOR 10TH STREET & EGAN DRIVE	4
		CLIENT: CITY & BOROUGH OF JUNEAU	

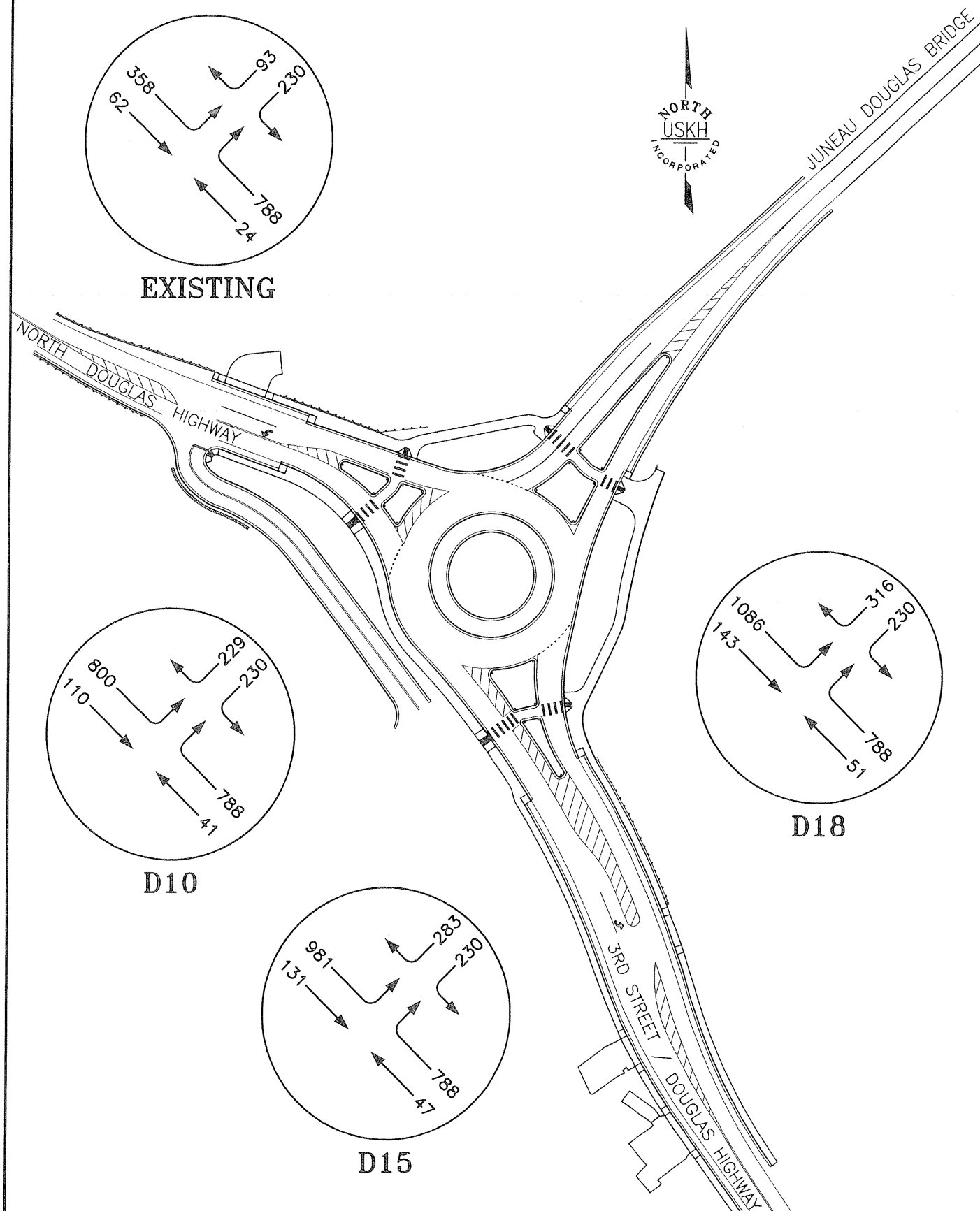

USKH Architecture • Engineering Land Surveying • Planning	CITY AND BOROUGH OF JUNEAU ★ ALASKA'S CAPITAL CITY DEPARTMENT OF ENGINEERING	PROJECT: NORTH DOUGLAS HIGHWAY REZONE TRAFFIC IMPACT ANALYSIS	FIGURE NO.
		TITLE: AM VOLUME DATA FOR THE DOUGLAS ROUNDABOUT	5
		CLIENT: CITY & BOROUGH OF JUNEAU	

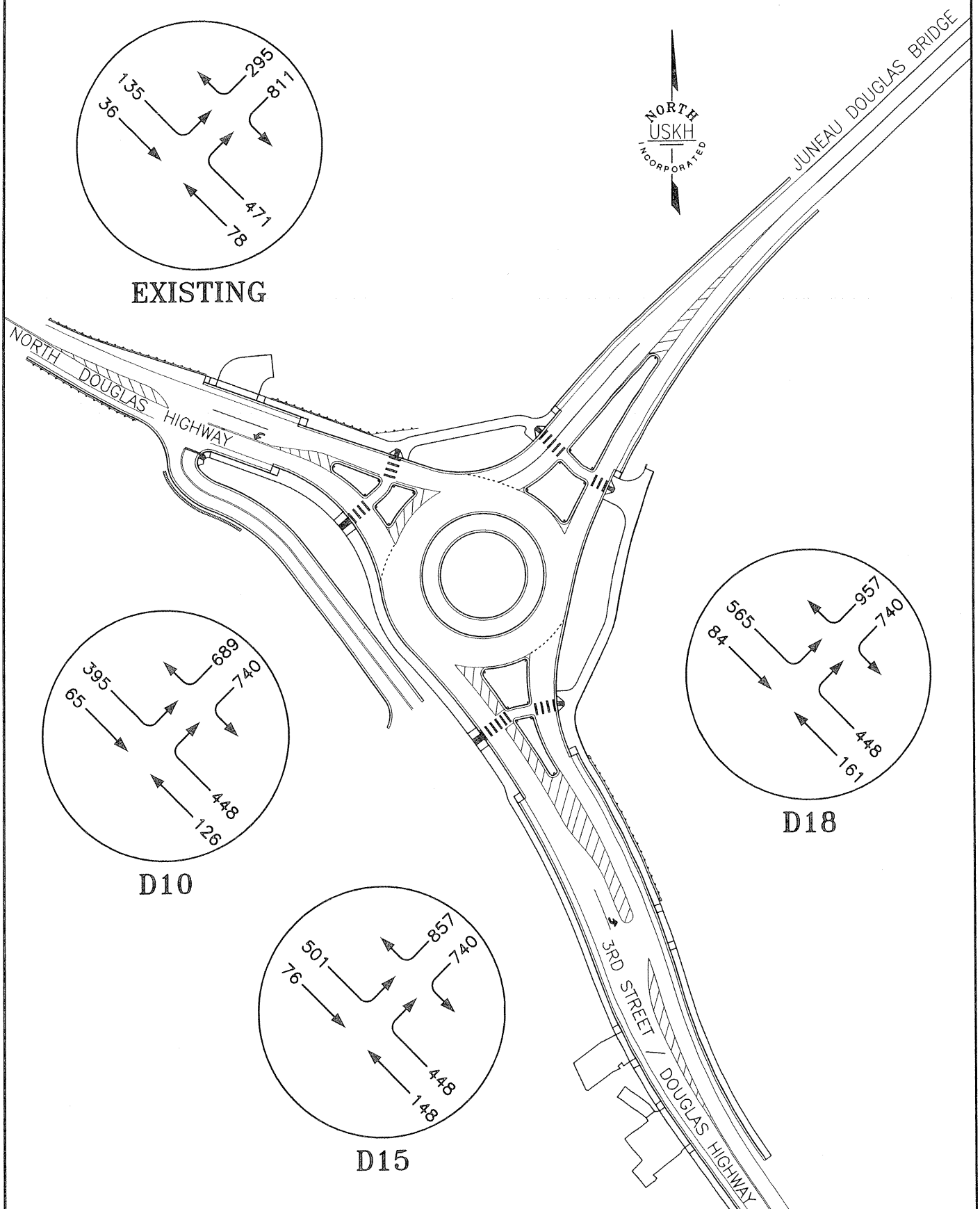

USKH Architecture • Engineering Land Surveying • Planning	CITY AND BOROUGH OF JUNEAU ★ ALASKA'S CAPITAL CITY DEPARTMENT OF ENGINEERING	PROJECT: NORTH DOUGLAS HIGHWAY REZONE TRAFFIC IMPACT ANALYSIS	FIGURE NO.
		TITLE: PM VOLUME DATA FOR THE DOUGLAS ROUNDABOUT	6
		CLIENT: CITY & BOROUGH OF JUNEAU	

3.4 Access Road Intersections

The access road schemes for future development along the NDH corridor have not been established at this time. Driveways and access roads connecting to NDH will be subject to the DOT&PF driveway permit process. In general, access points for new developments should be aggregated to the extent feasible, and access roads should be spaced at least one quarter mile from adjacent access roads.

The need for auxiliary lanes at access road intersections will depend on the traffic demands at the intersection, both turning onto the access road and continuing through the intersection on NDH. The following figures from NCHRP 457 give guidance on what traffic thresholds justify adding auxiliary turn bays onto NDH. Figure 7 applies for left-turn lanes and Figure 8 is applicable to right-turn lanes. It will be the responsibility of the developer to determine what, if any, auxiliary lanes are necessary on the access roads.

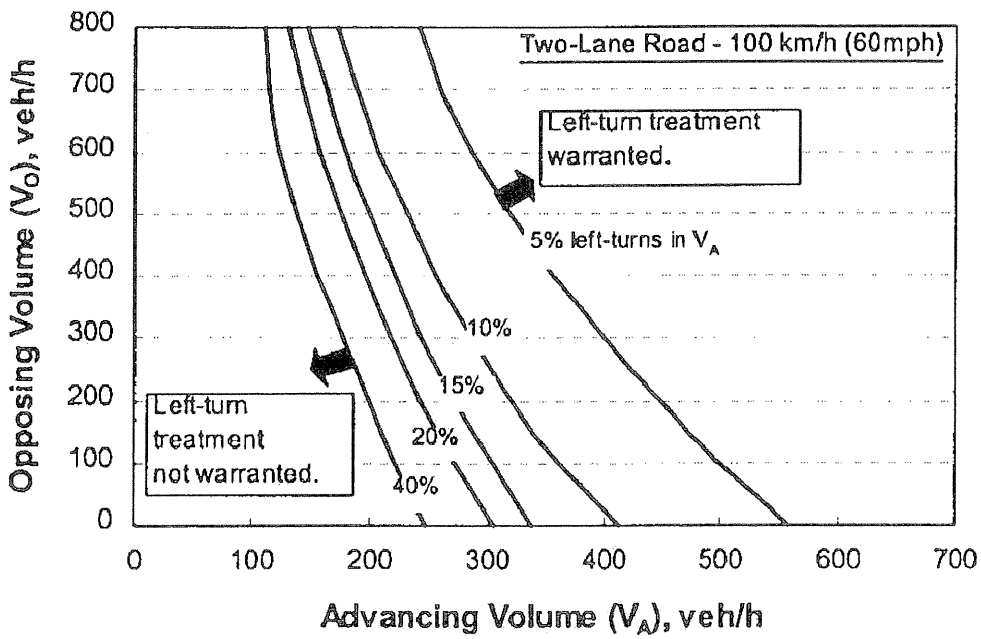

Figure 7 Left-Turn Lane Thresholds

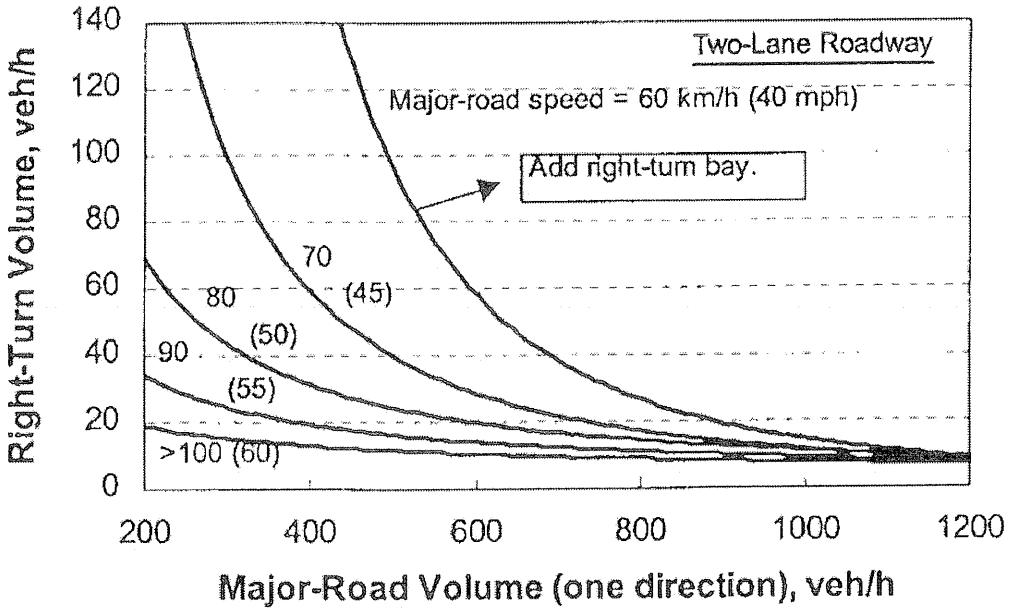

Figure 8 Right-Turn Lane Thresholds

3.5 Pedestrian and Bicycle Facilities

This segment of North Douglas Highway has 12-foot traffic lanes and 6- to 8-foot shoulders. Commuter bicycle traffic may use the traffic lanes or shoulders. The shoulders provide for other non-motorized traffic. In the 5-year time period analyzed in Section 2.6, only one collision involving non-motorized traffic has occurred. In May 2004 a vehicle collided with a pedestrian near 1.3 Mile causing a minor injury. The collision occurred during daylight hours on a straight and dry section of highway; inadequate pedestrian facilities do not appear to have been a factor.

Shoulder widths should be maintained when adding or improving access points along the highway. If auxiliary lanes are warranted, maintaining current lane and shoulder widths will help maintain a safe environment for non-motorized use.

3.6 Accident Analysis

DOT&PF analyzed safety at the intersections of Egan Drive and 10th Street and Douglas Highway and NDH and published the results in a Preliminary Engineering Report in December 2002. The analysis concluded that both intersections warranted safety improvements. DOT&PF constructed the roundabout at the Douglas Highway and NDH intersection to address capacity and safety in 2006. Recommended improvements at Egan Drive and 10th Street have not been constructed. DOT&PF has not recently studied collisions at these two intersections, but since traffic volumes have not increased, anecdotal evidence suggests no significant changes in safety conditions at the Egan Drive and 10th Street intersection, and improved safety at the Douglas roundabout.

DOT&PF provided collision statistics for NDH north of the roundabout for 2003 through 2007. A total of 37 collisions were reported within the limits of this study. No collisions resulted in fatalities, 3 caused

an incapacitating injury, 12 caused only non-incapacitating or possible injuries, and 22 resulted only in property damage. The tables below summarize the number of collisions by date, location and type.

Table 20 - Collisions by Year	
Year	**No.**
2003	12
2004	7
2005	5
2006	6
2007	7
Total	37

Table 21 - Collisions by Location	
Milepoint Range	**No.**
0 - 0.5	7
0.5 - 1	5
1 - 1.5	8
1.5 - 2	6
2 - 2.5	2
2.5 - 3	4
3 - 3.3	5
Total	37

Table 22 - Collisions by Type	
Type	**No.**
Rear End	8
Angle	9
Pedestrian	1
Parked Vehicle	1
Intersection/Driveway	15
Single Vehicle	17
Multiple Vehicle	20

The collision history shows a pattern of accidents at intersections and driveways, which is typical of high-speed highways with many access points. The rate of accidents is not high, but adding driveways along NDH is likely to increase that rate. To the extent possible, new development should use existing access points. New and improved access points should meet DOT&PF intersection and driveway design standards. Auxiliary lanes, if warranted (Section 2.4), should be used.

3.7 Traffic Impact Mitigation

Full development at any of the three housing mix scenarios presented in Chapter 1 would eventually result in LOS levels at Egan Drive and 10th Street that fall below minimum LOS standards. However, this development will occur over time and the re-zoning action in and of itself does not generate traffic. The re-zoning action will not require traffic impact mitigation. This report identifies the likelihood of decreased LOS at the critical intersections analyzed in this study as development occurs along NDH.

4 CONCLUSIONS

The development of land along NDH has the potential to accommodate much of Juneau's population growth for the next 20 years. The traffic generated by this development will negatively impact the LOS at the Douglas roundabout and the intersection of Egan Drive and 10th Street. Eventually, improvements to these intersections may be warranted to allow this growth to occur. Mitigation of impacts to pedestrian and bicycle facilities and safety are not likely to be warranted.

The re-zoning action will not cause impacts to traffic, but does increase the opportunity and potential for growth in the study area. Mitigation of these future impacts is not required for the rezoning action. As the development occurs over time, the impacts are projected to increase to the point that improvements at the subject intersections will be necessary.

CITY AND BOROUGH OF JUNEAU
ALASKA'S CAPITAL CITY
COMMUNITY DEVELOPMENT

(907) 586-0715
CDD_Admin@juneau.org
www.juneau.org/CDD
155 S. Seward Street • Juneau, AK 99801

COMMUNITY DEVELOPMENT DEPARTMENT - REQUEST FOR AGENCY COMMENT

DEPARTMENT: CBJ Streets Department

STAFF PERSON/TITLE: Ed Foster

DATE: 2/16/2021

APPLICANT: TDLH, LLC.

TYPE OF APPLICATION: Request to Rezone

PROJECT DESCRIPTION:

Request to rezone approximately 15 acres, at North Douglas Highway, from D15 (15 dwelling units per acre) to GC (50 dwelling units per acre) OR LC (30 dwelling units per acre). The 2013 Comprehensive Plan designates this area as Medium Density Residential.

LEGAL DESCRIPTION: Channel View Lot 1

PARCEL NUMBER(S): 6D0601150011

PHYSICAL ADDRESS: North Douglas Highway

SPECIFIC QUESTIONS FROM PLANNER:

1. Does CBJ Streets have any concerns regarding the rezone from D3 to D5?
2. Any additional information that the CBJ Street Dept. thinks will be useful in the decision-making process.

AGENCY COMMENTS:

CBJ Street Maintenance does not have any issues with this rezone request.

AGENCY COMMENTS (CONTINUED):

CITY AND BOROUGH OF JUNEAU
ALASKA'S CAPITAL CITY
COMMUNITY DEVELOPMENT

(907) 586-0715
CDD_Admin@juneau.org
www.juneau.org/CDD
155 S. Seward Street • Juneau, AK 99801

COMMUNITY DEVELOPMENT DEPARTMENT - REQUEST FOR AGENCY COMMENT

DEPARTMENT: Alaska Department of Transportation

STAFF PERSON/TITLE: Marie Heidemann

DATE: 03/19/2021

APPLICANT: TDLH, LLC.

TYPE OF APPLICATION: Request to Rezone 17 acres from D15 to GC, LC, or GC/LC

PROJECT DESCRIPTION:

Request to rezone approximately 15 acres, North Douglas Highway, from D15 (15 dwelling units per acre) to GC (50 dwelling units per acre), or LC (20 dwelling units per acre). The development potential will increase from 134 lots, at D15 lot sizes, to 335 lots, at GC and LC lot sizes. This lot count does not account for the land required for the development of internal roads, setbacks and open space. Any future subdivision will require additional comments and review from Alaska DOT

LEGAL DESCRIPTION: Channel View Lot 1

PARCEL NUMBER(S): 6D0601150011

PHYSICAL ADDRESS: North Douglas Highway

SPECIFIC QUESTIONS FROM PLANNER:

1. Does DOT have any concerns about driveways and easements onto North Douglas Highway regarding the rezone from D15 to GC, LC or GC/LC at this time?
2. Any additional information that DOT thinks will be useful in the decision-making process.

AGENCY COMMENTS:

Environmental – No objections or comments

Design – No objections

Traffic & Safety - The denser 50 du/acre may trigger the requirement for a traffic impact analysis. These are required when a proposed development is expected to generate over 100 trips in a peak hour.

Planning – Planning concurs with traffic/safety that a TIA may be required and which may result in some necessary mitigating action. We have concerns about the ability of North Douglas Highway and the bridge to handle the additional traffic. As well, high density development without any sidewalks could prove problematic. That all said, the TIA is the appropriate process to move forward with analysis of impacts.

AGENCY COMMENTS (CONTINUED):

ROW – No objection to the rezone request. We require submission of a driveway/approach road application for any changes in zoning designation or plans to create access onto state travel ways. As such, TDLH, LLC must submit an application for an approach road within ePermits for our review and adjudication.

ROW would most likely not approve an easement request. However the applicant may also consider applying for an Encroachment Permit or Right of Way Use Agreement to fill additional needs. An encroachment would be assessed economic rent and any use agreement would be thoroughly reviewed by our DOT&PF department review team. The application must comply with all federal, state, and local statutes or regulations.
It is best to reach out to ROW during the approach road planning stage before applying for a permit. This way we may assist in steering the applicant away from impermissible designs. It would also be prudent to consult with DOT Traffic & Safety during this time.

Some useful links include:
ePermits: http://www.dot.state.ak.us/stwddes/permits/index.shtml
Design & Construction Standards: http://dot.alaska.gov/stwddes/dcsrow/resources.shtml
Alaska Highway Preconstruction Manual: http://www.dot.state.ak.us/stwddes/dcsprecon/preconmanual.shtml
DOT Traffic & Safety: http://www.dot.state.ak.us/stwddes/dcstraffic/index.shtml

From: Bizzarro, Caleb T (DOT)
To: Laurel Christian; Joseph Meyers
Cc: Heidemann, Marie E (DOT)
Subject: DOT&PF SCR Review Feedback for Douglas Hwy Rezone & Subdivision requests
Date: Friday, April 16, 2021 4:13:17 PM
Attachments: image001.png
image002.png
Narrative.pdf
DOT Request for Comment.pdf

EXTERNAL E-MAIL: BE CAUTIOUS WHEN OPENING FILES OR FOLLOWING LINKS

Good afternoon Laurel and Joseph,

DOT&PF Southcoast Region has reviewed the request to rezone Channel View Lot 1, by TDLH, LLC as well as the request to subdivide Lot 1, Block C, Capital View Subdivision No. 1 by Brad Campbell. DOT&PF SCR would like to provide the following comments and feedback.

CBJ REZONE – Channel View Lot 1, North Douglas Highway

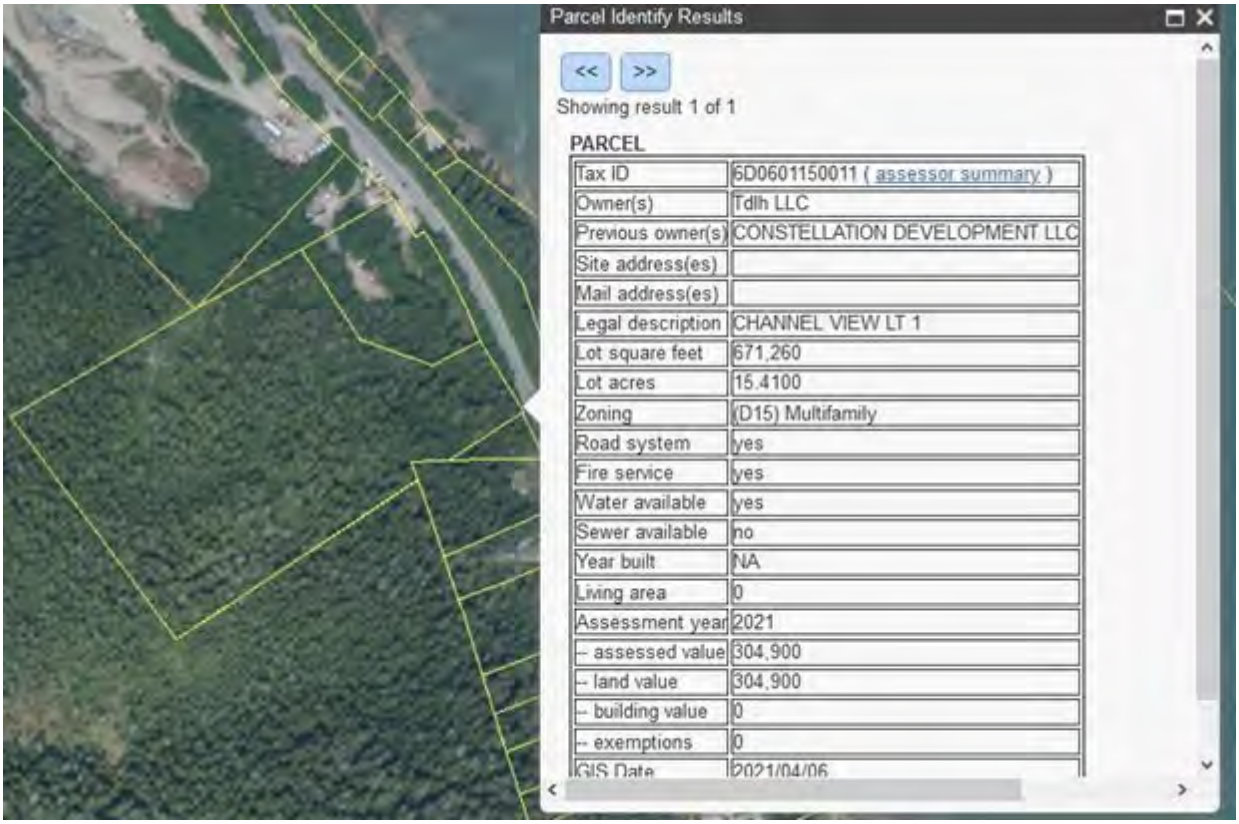

Environmental – No objections or comments
Design – No objections
Traffic & Safety - The denser 50 du/acre may trigger the requirement for a traffic impact analysis. These are required when a proposed development is expected to generate over 100 trips in a peak

hour.
Planning - Planning concurs with traffic/safety that a TIA may be required and which may result in some necessary mitigating action. We have concerns about the ability of North Douglas Highway and the bridge to handle the additional traffic. As well, high density development without any sidewalks could prove problematic. That all said, the TIA is the appropriate process to move forward with analysis of impacts.
ROW – No objection to the rezone request. We require submission of a driveway/approach road application for any changes in zoning designation or plans to create access onto state travel ways. As such, TDLH, LLC must submit an application for an approach road within ePermits for our review and adjudication.

ROW would most likely not approve an easement request. However the applicant may also consider applying for an Encroachment Permit or Right of Way Use Agreement to fill additional needs. An encroachment would be assessed economic rent and any use agreement would be thoroughly reviewed by our DOT&PF department review team. The application must comply with all federal, state, and local statutes or regulations.
It is best to reach out to ROW during the approach road planning stage before applying for a permit. This way we may assist in steering the applicant away from impermissible designs. It would also be prudent to consult with DOT Traffic & Safety during this time.

Some useful links include:
ePermits: http://www.dot.state.ak.us/stwddes/permits/index.shtml
Design & Construction Standards: http://dot.alaska.gov/stwddes/dcsrow/resources.shtml
Alaska Highway Preconstruction Manual:
http://www.dot.state.ak.us/stwddes/dcsprecon/preconmanual.shtml
DOT Traffic & Safety: http://www.dot.state.ak.us/stwddes/dcstraffic/index.shtml

CBJ SUBDIVISION – Lot 1, Block C, Capital View Subdivision No. 1, South Douglas Highway

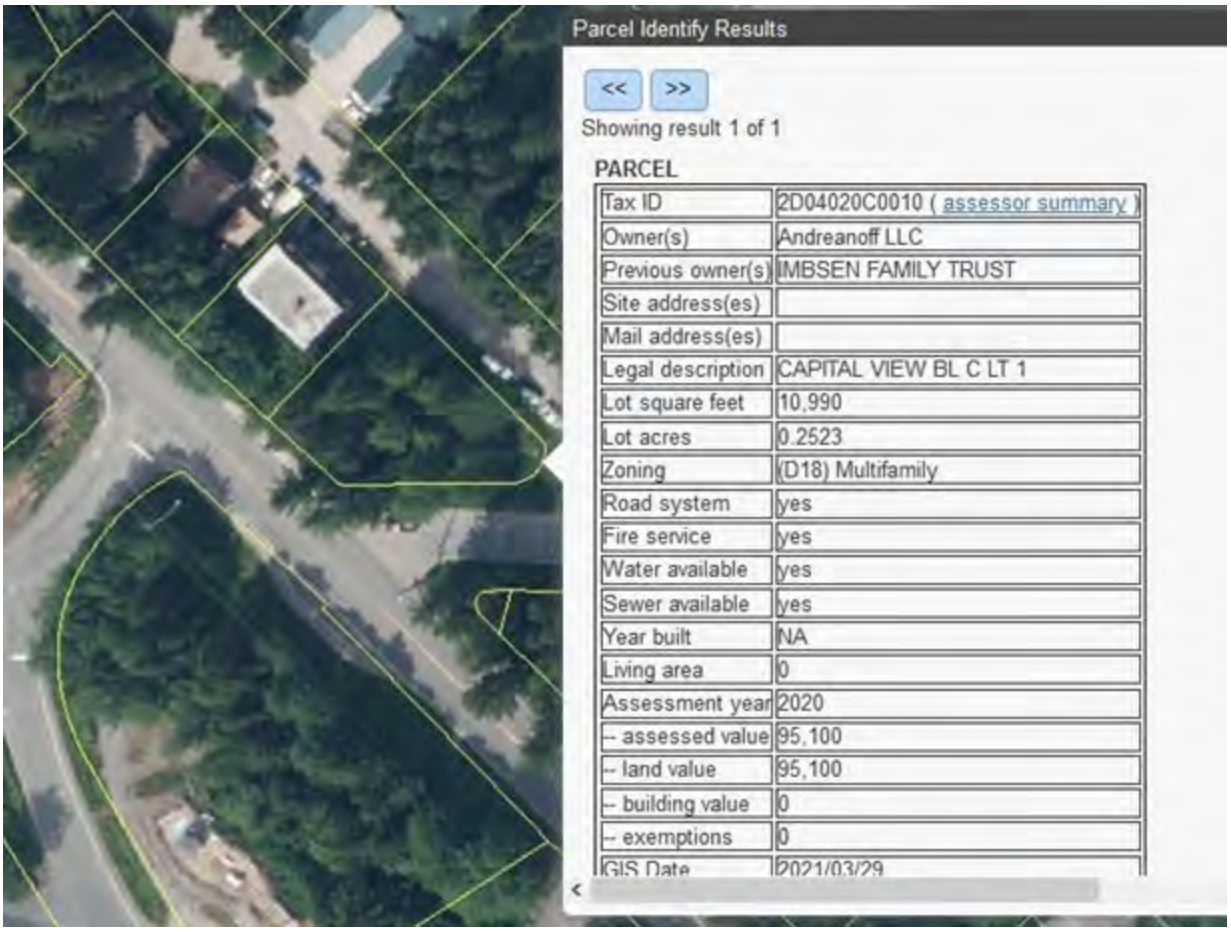

Environmental – No objections or comments
Planning – Planning supports driveway access from 2nd street. Therefore, no objections from planning.
Design – No comments or objections.
ROW Property Management - No objection to the proposed subdivision of Lot 1. Ensure access is from 2nd Street - as is currently planned.
ROW Utilities – Water and sewer utilities are accessed from 2nd street. Power and comm. are also acceptable from 2nd street. If this remains the plan for utilities, Utilities section has no objections.

Best Regards,

Caleb Bizzarro
Right Of Way Agent
Department of Transportation & Public Facilities
Southcoast Region Design & Engineering Services
Ph: (907) 465 4519
Email: caleb.bizzarro@alaska.gov

From: Autumn Sapp
To: Joseph Meyers
Subject: RE: AME 2021-0001
Date: Tuesday, February 16, 2021 2:00:50 PM

Good afternoon,

There are no comments for rezoning from General Engineering. Let me know if there was something specific you were looking for comments on.

Thanks,

Autumn Sapp
City and Borough of Juneau
Engineering & Public Works
Business Manager
907-586-0917

From: Joseph Meyers <Joseph.Meyers@juneau.org>
Sent: Tuesday, February 16, 2021 1:15 PM
To: Autumn Sapp <Autumn.Sapp@juneau.org>
Subject: AME 2021-0001

Hello Autumn,

I have a rezone for D60601150011 and I am reaching out for comment. Please provide comment by March 2nd 2021.

I:\DOCUMENTS\CASES\2021\AME\AME21-001 N Douglas Hwy\Agency Review\CBJ Engineering_Request for Comment.pdf
I:\DOCUMENTS\CASES\2021\AME\AME21-001 N Douglas Hwy

Thank you!

Joseph Meyers | Planner I
Community Development Department | City & Borough of Juneau, AK
230 S. Franklin Street, 4th Floor Marine View Building
Main Line: 907.586.0715
Personal Line: 907.586.0466
He/him/his

CITY AND BOROUGH OF
JUNEAU
ALASKA'S CAPITAL CITY

AME2021 0001 – Public Meeting

March 11, 2021, 6:00 P.M

Proposed rezone of 15.41 acres on North Douglas Highway

Presentation by Joseph Meyers

Presentation by Travis Arndt

6 public attendees

Q: Does CDD understand that the applicant has not specified a specific intention or reason to change the zoning designation to fit the application?

CDD Staff: As the applicant mentioned, he is aiming to expand possible uses to include non-residential boat storage.

Q: What is the feasibility of the bench road, and when could that possibly happen? If it is the one I'm thinking of, it has a very narrow access to the highway, and a high traffic area. I imagine it could be challenging to pull boats in and out. I'm thinking the bench road might be the better access, and if the bench road might be the primary intent.

CDD Staff: The bench road, at this point, is a Comprehensive Plan proposal, keeping options open with a few different alignments. There is some property at the top of Cordova that is transition zoned. That means it cannot be higher density until a bench road is constructed. The bench road would probably not come that far out North Douglas. It is not on the books, but there is recognition that the access would be helpful in the future. The Comprehensive Plan is long range and visionary.

The applicant stated they are not doing this to be part of the bench road.

Applicant: I am not into giving the city a free easement. If the city was asking about access, and it worked with the layout of the property, but not a big fan of building roads for others. Not much gain for the users of the lot, as it is very expensive. Not doing it for the bench road.

C: It is nice to see the lot locations on the big screen, to see how they are laid out. It would be helpful to have a photograph of the space available between houses where the access is along the highway.

Q: I assume that space has been confirmed adequate. What size vehicles would be anticipated at his development?

Applicant: We usually work with the Alaska Department of Transportation and Public Facilities when we have a proposal similar to this. Frontage would be next to Mike Hatch, with frontage of about 200 feet.

From: Margo Waring
To: Joseph Meyers
Subject: ReZone North Douglas
Date: Tuesday, March 16, 2021 5:47:24 PM

EXTERNAL E-MAIL: BE CAUTIOUS WHEN OPENING FILES OR FOLLOWING LINKS

Hello Mr. Meyers,

Thank you for sharing the recording of the neighborhood meeting with Travis Arndt who explained his interest in re zoning his D15 parcel to a more commercial designation. As I understand it, his current concept is to build boat storage, perhaps some with apartments above a boat garage. He feels this would be a good location because owners could go either to the Douglas Boat Launch or the North Douglas Boat Launch.

My main concern is that the property's road frontage is very limited, which means that any road from the property would enter the North Douglas Highway on a blind curve. Since the boats being trailered or hauled are likely of a substantial size (otherwise skiffs would be in people's driveways not in expensive storage), we could expect that the vehicle plus boat would be turning for more time that a car would and would, therefore be a longer lasting danger to traffic, whether turning right or left. Many have been the near collisions I have seen on this stretch of the highway.
As an alternative, perhaps Mr. Arndt could arrange for a right of way through the adjoining property and exit at the gravel pit's road, a safer exit on the roadway.

I strongly encourage requiring an easement to access the Bench Road as a development requirement. For too long the CBJ has not looked far enough into the future , requiring access to the Bench Road. When it becomes clearer that the Bench Road is needed we will rue the day that shorter term decision making precludes sensible roadway development.

As long as there is no Bench Road, whatever designation is ultimately decided by the Planning Commission, I urge that mining and similar extraction and processing be prohibited, as increasing large truck traffic is inconsistent with the uses of the highway.

I would appreciate my letter being kept in this file as it moves on to the Planning Commission.
Sincerely,
Margo Waring
11380 N. Douglas Hwy
Juneau, AK 99801

MINUTES

REGULAR PLANNING COMMISSION MEETING
City and Borough of Juneau
Mike Satre, Chairman

August 26, 2014

I. ROLL CALL

Mike Satre, Chairman, called the Regular Meeting of the City and Borough of Juneau (CBJ) Planning Commission (PC), held in the Assembly Chambers of the Municipal Building, to order at 7:00 pm.

Commissioners present: Mike Satre, Chairman; Dennis Watson, Vice Chairman; Bill Peters, Ben Haight, Gordon Jackson, Paul Voelckers

Commissioners absent: Dan Miller, Karen Lawfer, Nicole Grewe

Staff present: Hal Hart, Planning Director; Travis Goddard, Planning Manager; Chrissy McNally, Planner I; Jonathan Lange, Planner II; Beth McKibben, Senior Planner; Robert Palmer, Municipal Attorney II

II. APPROVAL OF MINUTES

- July 22, 2014 – Special Planning Commission Meeting
- July 22, 2014 – Regular Planning Commission Meeting

MOTION: *by Mr. Watson, to approve the minutes of the Special Planning Commission Meeting of July 22, 2014, with the correction that the Special Meeting did not adjourn at 6:06 p.m. but reconvened in executive session, from which it adjourned at about 7:15 p.m., and approved the Regular Planning Commission Meeting of July 22, 2014, with any minor modifications by any Commission members or by staff.*

The motion by Mr. Watson was approved with no objection.

III. PUBLIC PARTICIPATION ON NON-AGENDA ITEMS

Wilma Avenue resident Russ McDougall addressed the Commission stating that he is a 40 year resident of Juneau. He told the Commission he felt that work on modifying the accessory apartment rule was coming along slowly, and he wanted to encourage the Commission to take action on this rule. They would like to increase the accessory apartment rule from 600 square

feet up to 800 to 1000 square feet, explained Mr. McDougall. Mr. McDougall said that he has a job pending because of this rule.

Mr. Watson asked when they began working on this issue.

Mr. McDougall responded they began working on this in 2007.

Mr. McDougall stated that it has been kicked around as an issue long enough and that it is now time to move forward to resolve these problems.

Mr. Voelckers asked where the current holdup is with this project.

Mr. McDougall said he believes that it is coming up before the Commission within the next month or two for a final recommendation.

IV. PLANNING COMMISSION LIAISON REPORT

Mr. Nankervis reported that the Assembly met last night and did see the Landscape Alaska appeal. That decision has not been made public yet, said Mr. Nankervis.

V. RECONSIDERATION OF THE FOLLOWING ITEMS - None

VI. CONSENT AGENDA - None

VII. CONSIDERATION OF ORDINANCES AND RESOLUTIONS - None

VIII. UNFINISHED BUSINESS - None

IX. REGULAR AGENDA

AME2013 0016:	Rezone of approximately 245 acres of RR(T)D3 to D3 and RR(T)D15 to D15 and approximately 40 acres of D1(T)D3 to D3 along North Douglas Highway.
Applicant:	City and Borough of Juneau
Location:	North Douglas Highway

Staff Recommendation

1. Approve the zone transition from RR to D-15.
2. Approve the zone transition from D1 to D-3 for those lots designated RDR on the Land Use maps of the Comprehensive Plan.

Additionally, staff recommends consideration of the following:

1. An up zone to D5 for lots designated as ULDR on the Land Use maps of the Comprehensive Plan.
2. An up zone to D-15 for lots designated as MDR on the Land Use maps of the Comprehensive Plan.

Ms. McNally reported that this transition rezone was initiated by the CDD staff. This land is located from mile 1.3 to 1.9 on North Douglas Highway, she said. This area received public sewer in the summer of 2013, said Ms. McNally, so the staff felt that it was time to initiate the rezone. Approximately 200 acres of the CBJ owned land designated for transition from Rural Residential to D3 is shown primarily as Urban Low Density Residential, said Ms. McNally. She added that in addition there is a 400 foot wide buffer along Eagle Creek which is designated for a stream protection corridor. There are 43 parcels in the transition area with the majority of the parcels zoned D1 with the transition to D3, explained Ms. McNally.

Mr. Watson asked how the 200 acre area of the CBJ parcel would be accessed by the highway.

Ms. McNally responded that at this juncture there is currently no access to the highway from those lots in question.

MOTION: *by Mr. Watson, that AME2013 0016 be approved based upon staff's findings and recommendations, and asked for unanimous consent by the Commission.*

The motion was approved by unanimous consent.

AME2014 0009:	An Application to Rezone Lot 3 of Black Bear Subdivision at the south end of Silver Street from D-1 to D-3.
Applicant:	Juneau Youth Services, Inc.
Location:	Silver Street

Staff Recommendation

Based upon the proposed project (identified as Attachments A and B), and the findings and conclusions stated above, the Community Development Director recommends the Planning Commission **RECOMMEND APPROVAL** to the Assembly for the rezone proposal.

This lot is located at the south end of Silver Street which is located in the west Mendenhall Valley, explained Mr. Lange. This is west of the Mendenhall River, north east of Auke Lake in the Back Loop Road area, and south of the Montana Creek area, explained Mr. Lange.

Juneau Youth Services is the applicant of this large parcel of land consisting of 159 acres, said Mr. Lange. In 2013 they recently divided that large parcel into three smaller parcels, said Mr. Lange. Juneau Youth Services is located on the Back Loop Road, and they have requested to rezone a ten acre parcel, with a 127 acre conservation lot which they have given to Alaska Seal Trust, which has subsequently been deeded to the CBJ as a conservation lot, explained Mr. Lange.

Juneau Youth Services is asking to rezone the ten acre parcel from D1 to D3, said Mr. Lange, which would be the same zoning as the adjacent McGinnis subdivision. The D3 zone request would be an expansion of an existing zone north of the subject parcel, said Mr. Lange. The

rezone request does conform to the maps of the Comprehensive Land Use Plan, said Mr. Lange, characterized by densities of one to six units per acre, he said.

The proposed rezone did go before the Wetlands Review Board in July, said Mr. Lange. The Wetlands Review Board gave a recommendation that if a rezone were recommended for a density greater than D3, then an additional wetland evaluation should be performed.

Mr. Watson asked staff to clarified that the existing lots located north of the subject parcel were currently zoned D3 .

Mr. Lange confirmed that this was correct.

Board President for Juneau Youth Services Peter Freer said while they do not have any agency or institutional uses planned for the property at this time, they will have future plans for the property at a zoning density consistent with the surrounding neighborhood.

Mr. Watson asked if there was a walking path through the larger parcel of land.

Mr. Freer said that there was an unofficial walking path, but not on the 10 acre parcel of land.

PUBLIC COMMENT
Mark Millay, a resident of Wren Drive, said that he wanted to make it clear that the land was not platted according to Title 49. He said he objects to the zoning change until the subdivision itself is in compliance. He said in his view essentially what is happening is that the zoning change is being requested in which D1 zoning cannot even be supported, let alone support for D3 zoning. He said when the survey was completed, the Title 49 section dictating compliance was omitted. He said he felt this plat should never have been signed until the amenities and utilities were brought forth. He said the argument for the North Douglas rezone request was that utilities were present in the area. There are a lot of issues which need to be nailed down before development can proceed, such as expanded size for accessory apartments creating expanded size of the sewer, said Mr. Millay.

Lorraine Hansen, who lives in the end of Wren Drive, said she is concerned about this application because there is no information provided for the adjacent neighborhood property owners. She said they cannot properly assess the impact to their properties when they have no knowledge as to why the rezoning is occurring. She said that she would appreciate a proposal from the applicant actually stipulating what they plan to do with the property.

Chairman Satre responded that the Planning Commission is in the same position regarding re-zones. He said they have to consider all possibilities in that zoning district because the owner can always sell it the next day.

Wren Drive resident Christie Elliott said she is also frustrated with what she sees as a double standard in the zoning process for this zoning parcel. She also expressed confusion about the wetlands issues.
Mr. McDougal wanted to make the current property owner and future property owners aware of the forthcoming tax abatement coming before the Legislature this year which would defer property tax owed on property until it was sold. In addition, Mr. McDougal said that he is in favor of the zone change, but that it does need to meet the standards, and if necessary it should be delayed until it can meet those standards.

Mr. Nate Houston said they bought their house a little over a year ago with the assumption that the land behind their property would be undisturbed. He expressed concern that such a large majority of the ten acres which were wetlands are no longer wetlands and are now uplands. Mr. Houston said that he feels the rezone to D3 does not match the rest of the neighborhood. Mr. Houston stated that his biggest concern is the view shed. They have a lot of standing water in their yards and no sidewalks, and this did not seem like D3 zoning to him, he said.

APPLICANT
Mr. Freer said that he had no notion that anything was wrong with the plat. He said it was taken through the normal CBJ process, and it was approved and signed, and he was caught quite unaware tonight that there was some fatal flaw or something defective in their plat. Should the Commission want to delay their decision while the plat is reviewed again for accuracy before completeness, Mr. Freer said he thought that would certainly be suitable.

Regarding the wetlands issue, said Mr. Freer, the ten acre parcel is largely uplands on the basis of two wetlands reports that were done by Bosworth Botanical Consulting in connection with appraisals for the property that led to the subdivision of the property and the setting aside of the majority of that property for conservation purposes. He said they do not have a development proposal at this time.

Chairman Satre said the wetlands determinations were specifically labeled as non-jurisdictional studies. If there were a specific proposal for the land, said Chairman Satre, at that point the Army Corps of Engineers would become involved.

Mr. Voelckers asked if the plat was legally recorded.

He was told that the plat was legally recorded.

Mr. Voelckers asked for a follow-up of the legal status of the plat.

Mr. Lange answered that it is a legally recorded plat with legally recorded lots.

Chairman Satre asked if the other questions raised by Mr. Millay could be addressed regarding access, the frontage required, and the other requirements for subdivisions.

Mr. Goddard responded that the frontage and utilities for this lot are in the right-of-way fronting the property. However, said Mr. Goddard, they are not extended to the property line nor is the road itself. Mr. Goddard said he does not know why they were not required to build a full width road from Wren to the edge of the subdivision. He said that is a good question, to which he does not have the answer at this time. Theoretically, said Mr. Goddard, the time to appeal that subdivision would have been at the time of that decision.

Chairman Satre said assuming the rezone passes by the Assembly, what would the applicant have to do, to develop the right-of-way.

Mr. Goddard responded that they would have to improve the driveway to the standards up to an existing maintained City right-of-way. The newly created lots would have to have frontage in accordance with the standard of the zoning district under which they are subdivided.

Mr. Watson said he was not comfortable this evening until he had some more answers. Mr. Watson said he needed some more clarification for several reasons: he felt they were entitled to this as a Commission, and all of their decisions were appealable, and if they could prevent neighbors and the applicant having to become embroiled in a very lengthy appeal process, then he felt a continuance may prevent this.

Mr. Haight said that he agreed with Mr. Watson. He said since this would be moving forward to the Assembly, then the Commission should provide as much information as possible.

Mr. Goddard asked for clarification of the two specific questions to which the Commission would like answers.

Chairman Satre agreed. He said they needed to provide the staff with as clear direction as possible.

Mr. Watson said he would like clarification on Title 49. He said he would like clarification on the access with regards to whether or not there are to be sidewalks on both sides of the street and all of the street requirements because that would be affecting the neighbors' property.

MOTION: *by Mr. Watson, to continue this at the next available Planning Commission meeting, asking for staff to provide additional information, and asking for unanimous consent.*

The motion passed by unanimous consent.

X. BOARD OF ADJUSTMENT – None

XI. OTHER BUSINESS - None

XII. DIRECTOR'S REPORT

Accessory Apartments
Ms. McKibben asked the Commission if they want to launch off with the new draft regarding accessory apartments or if they would prefer that it go to the Title 49 Committee first.

Mr. Watson asked when they would be seeing the draft of the accessory apartment language.

Mr. Goddard responded they have the draft as it was left by Ben Lyman.

Chairman Satre said he was uncomfortable discussing transitional housing in tandem with the hearing coming up.

Ms. McKibben said they were not thinking of discussing the issues in tandem.

Mr. Goddard said the Subdivision Review Committee has enough to do with perhaps the accessory apartments since it is essentially complete. It may be slid in late September or October with Title 49.

Mr. Watson repeated that he would still like to know when the accessory apartment issue would be brought before the Commission.

Ms. McKibben said at this point it would be at some time in October because of the current schedule of Planning Commission meetings.

Transitional Housing
In light of the Use Not Listed decision, said Mr. Palmer, one of the concerns that came out of that discussion was a recommendation by the Board of Adjustment to recommend to the Assembly a transitional housing element in a D5 zone. With that recommendation, said Mr. Palmer, the City believes that process should be started sooner rather than later. They want to ask the Commission how they would like to proceed with this; did they want this to go through the Title 49 Committee or through the Commission as a whole.

Chairman Satre said he thought it would be nice to start with the Committee structure and work up rather than start with the Commission and work down.

Mr. Haight said he agreed with Chairman Satre. He said at this point they needed to define what needed to go to the Committee.

Mr. Watson said he would like to know who was on Title 49 Committee, and that he would appreciate it if the website could be updated indicating the membership of that committee.

Chairman Satre asked Ms. McKibben if she could send the rough document of the work plan to the Commission members for their review.

The Commission agreed that accessory apartment language could come directly to the Commission for review could come directly to the Commission for review rather than committee.

Street Vacation
Mr. Palmer stated that the Street Vacation Code needs to be amended to comply with state law, and to include some provisions that a street vacation decision by the Commission is the recommendation that goes to the Assembly, because that is a legislative decision. Mr. Palmer said his question for the Commission tonight is does the Commission want this to start at a committee level or with the Commission.

Chairman Satre asked if Mr. Palmer had language on this issue for ready to be launched.

Mr. Palmer responded in the affirmative.

Mr. Haight said this was their next topic for the Subdivision Review Committee.

Director
The Wireless Communication Facilities Ordinance is before the Assembly and should be decided this fall, said Mr. Hart.

The Auke Bay Steering Committee is working on the Auke Bay Sub Area Plan Saturday, September 6, said Mr. Hart. The topic for that date is in-fill. That plan should be before the Commission in October, said Mr. Hart.

The staff is continuing to work with FEMA (Federal Emergency Management Agency), said Mr. Hart, to continue to see how FEMA will assist this community, especially in the area of velocity flood zones and other flood areas around Juneau.

The companion piece to the Auke Bay Area Plan will be delivered about three months after the first piece, said Mr. Hart. The Comprehensive Plan comes first, with the actual rules following, said Mr. Hart.

Mr. Hart asked the Commission where it would next like to direct its attention for neighborhood planning.

The Economic Development Plan will also be presented to the Commission, said Mr. Hart. Those policies and objectives are the forerunner of the next Comprehensive Plan, said Mr. Hart.

Mr. Watson said when the Economic Development contractors presented their plan to the Assembly, that he was disappointed in what they presented. Mr. Watson said it was his impression that the contractors were asking more of what the Assembly, wanted rather than imparting information to the Assembly.

Mr. Hart said it was his understanding that a more focused Comprehensive Plan was desired for this year, with less content and more focus. His feedback from last year was that the document was too big, too unwieldy, and that there was too much content to weed through.

Mr. Hart said that during the next 12 to 15 months that the Commission will be seeing action on almost every chapter of the Comprehensive Plan.

Mr. Voelckers said that he recalled that a joint meeting was scheduled with the Assembly at some point in the near future.

Mr. Hart stated he believed that was at some date in September.

Mr. Voelckers said that he recalled that the Commission was going to schedule time at another meeting to discuss the Economic Development Council presentation.

Chairman Satre said he felt it would be very appropriate to schedule some time during the next meeting during Commission comments and questions to discuss the Economic Development Council presentation and Commission feedback.

- Joann Lott, Steering Committee Applicant

The Commission approved Joann Lott as a new member for the Auke Bay Steering Committee.

XIII. REPORT OF REGULAR AND SPECIAL COMMITTEES

Subdivision Review Committee
Mr. Haight reported that the Subdivision Review Committee met this evening. There will be another meeting this Thursday night (August 28, 2014), with probably another meeting or so before they have completed their necessary business. They are working on lot consolidation, reaching into the public way. Easement vacation is next, said Mr. Haight. They also reviewed a document submitted by the Engineering Department which addressed financial responsibility.

Commission on Sustainability
Last week, said Mr. Haight, he was with the Commission on Sustainability. Their guest was the City Manager. She spoke about the importance of celebrating some of the Borough's successes in energy conservation management.

Public Works
The Public Works Committee met two weeks ago, said Mr. Watson. It discussed street vacations, said Mr. Watson. That will be coming towards the next Planning Commission meeting, said Mr. Watson.

XIV. PLANNING COMMISSION COMMENTS AND QUESTIONS

Mr. Watson said he would still like to address the issue of why rezone requests can only be brought up only in January and July.

XV. ADJOURNMENT

The meeting was adjourned at 8:59 PM

CITY/BOROUGH OF JUNEAU
ALASKA'S CAPITAL CITY

PLANNING COMMISSION
NOTICE OF RECOMMENDATION
Date: November 25, 2014
File No.: AME2013 0016

City & Borough of Juneau
City & Borough Assembly
155 South Seward Street
Juneau, AK 99801

Application For:	A rezone request to up-zone 2 parcels from RR(T)D-3 to D-15 along North Douglas Highway.
Legal Description:	Channel View Lot 1
	Triangle Lot 3
Property Address:	North Douglas Highway
Parcel Code No.:	6D0601150011
	6D0701000020
Hearing Date:	November 25, 2014

The Planning Commission, at its regular public meeting, adopted the analysis and findings listed in the attached memorandum dated August 18, 2014, and recommended that the City and Borough Assembly adopt staff's recommendation for a zone change request. This regulatory map change would modify the current RR(T)D-3 district in the designated area to D-15, allowing 15 dwelling units per acre.

This rezone is part of a larger transition zone which includes 43 parcels. The remaining 41parcels will be zoned according to the transition zoning as mapped on the CBJ Zoning Atlas, that is RR(T)D3, RR(T)D15, and D-1(T)D-3.

Attachments: August 18, 2014 memorandum from Chrissy McNally, Community Development, to the CBJ Planning Commission regarding AME2013 0016.

This Notice of Recommendation constitutes a recommendation of the CBJ Planning Commission to the City and Borough Assembly. Decisions to recommend an action are not appealable, even if the recommendation is procedurally required as a prerequisite to some other decision, according to the provisions of CBJ §01.50.020 (b).

City & Borough of Juneau
File No.: AME2013 0016
December 1, 2014
Page 2 of 2

Project Planner: Chrissy McNally, Planner
Community Development Department

Michael Satre, Chair
Planning Commission

Filed With City Clerk

12/2/14
Date

NOTE: The Americans with Disabilities Act (ADA) is a federal civil rights law that may affect this recommended map change. ADA regulations have access requirements above and beyond CBJ - adopted regulations. Contact an ADA - trained architect or other ADA trained personnel with questions about the ADA: Department of Justice (202) 272-5434, or fax (202) 272-5447, NW Disability Business Technical Center (800) 949-4232, or fax (360) 438-3208.

CITY/BOROUGH OF JUNEAU
ALASKA'S CAPITAL CITY

MEMORANDUM

Community Development Department

Date: **November 13, 2014**

To: **Planning Commission**

From: **Travis Goddard, Planning Manager**
Community Development Department

File No: **AME2013 0016**

Re: **Supplemental Public Input and Analysis**

This memorandum provides points of clarification as requested for the above noted project.

The rezone request was initiated by CBJ Community Development Staff after a discussion with a property owner within the transition zoning area. This property owner was contemplating a cottage development but needed a higher density zoning. It was determined at that time that the transition trigger, the provision of utilities in this case, had been satisfied and that the transition was warranted.

While processing AME20130016 with the existing transition zones, the CBJ Lands and Resources Division noted that the transition zoning was not the highest density zoning that could be obtained under the 2013 *Comprehensive Plan* and suggested that the land be rezoned to a higher density. Up-zoning was recommended to the Planning Commission.

AME2013 0016 received a recommendation for approval from the Planning Commission at the regular August 26, 2014 hearing and the Notice of Recommendation was filed with the City Clerk on September 4, 2014. The Assembly reviewed the case at the October 20, 2014 hearing. Neighbors speaking at the hearing raised questions about the case and whether notice had adequately been given. After discussion of the issues, the Assembly remanded the case to the Planning Commission. The Assembly asked that staff ensure proper notice is given for the case and that analysis be performed to determine whether zoning for even higher densities could be assigned to the area.

Concerns over Public Notice Compliance
Public notice consistent with CBJ chapter 49.15.230 was provided on three occasions. In addition, prior to the Assembly hearing, property owners within the area affected by AME2013 0016 were invited to a neighborhood meeting to explain the effects of the rezone. Public notice was also performed for the October 20, 2014 Assembly meeting. Staff finds that the application has met public notice standards.

Staff Report Density Highlights
In the original staff report CDD Planner, Chrissy McNally, reviewed the *Plan* for density direction and noted her findings in the attached staff report. Specifically she found:

- Medium Density Residential (MDR) prescribes "*densities ranging from 5 to 20 units per acre";*
- Urban/Low Density Residential (ULDR) prescribes "*densities of one to six units per acre"; and,*
- Rural Dispersed Residential (RDR) prescribes densities "*intended to permit one dwelling unit per acre or larger lot sizes…"*

In the staff report, analysis identified that the appropriate zoning under each *Comprehensive Plan* designation was:

- MDR – D-3, D-5, D-10, D-10SF, D-15, and D-18 are all consistent with the MDR designation.
    - D-3, D-5 and D-10SF are single-family residential zoning districts.
    - D-10 and D-15 are intended to be relatively low-density multi-family residential districts.
    - D-18 is intended for high density multi-family development accommodated through midrise-type development.
- ULDR – D-5 at five units per acre (D-10 being too high and D-3 not being appropriate within urban service boundaries); and
- RDR – D-1 and outside of urban service boundaries.

Reconciling Inconsistencies between the Comprehensive Plan & Zoning
Staff review identified conflicts/inconsistencies between the *Comprehensive Plan* and zoning, which warranted changes to the requested transition zones.

ULDR - For those parcels in ULDR, the proposed transition zone of D-3 was no longer appropriate because D-3 zoning is for land outside urban service boundaries. The very fact that the "transition" wasn't triggered till urban services became available created a catch-22 for staff.

When Lands (who own 200 of the 285 acres) suggested higher densities were warranted, CDD staff agreed and recommended the highest density single-family residential zoning possible within the six-unit per acre density outlined in the *Plan*. Staff reviewed the zoning code and

found D-5 to be both within the *Plan* density range goal, but also to be a zoning district to be served by urban services. Therefore, staff recommended D-5 up-zoning.

RDR – The *Plan* intends RDR designations to be very low density development that is not provided with municipal water or sewer. So right from the start, the *Plan* designation does not fit with the underlying zoning that existed when the *Plan* was adopted. Now, faced with the desire to accommodate, and if possible facilitate, residential development, staff was faced with reviewing a transition rezone request that is on its face inconsistent with the *Plan*.

Staff concluded that the RDR designation could not be fulfilled because the area was already serviced by municipal services and the existing zoning envisioned densities higher than the *Plan*. Lacking further guidance, staff concluded implementation of the underlying transition zone of D-3 was appropriate given that it existed prior to adoption of the *Plan* and that the *Plan* adoption process made no effort to correct the discrepancy.

For this reason, staff recommended D-3 zoning for the RDR properties. D-5 up-zoning was not recommended because it would not be consistent with either the RDR *Plan* Designation or the underlying transition zoning district.

MDR – The *Plan* intends land designated as MDR to be urban residential development for multi-family dwelling units. Densities between 5 and 20 units per acre are desired.

As noted above, transition from RR to D-3, D-5, and D-10SF would not be consistent because they are not consistent with the desire for higher density multi-family development. This means that D-10, D-15, and D-18 were zoning designation candidates that could be consistent with the *Plan*.

Staff analyzed the existing conditions and neighboring zoning and found the “transition” D-15 zoning be consistent with both the *Plan* and the neighboring D-15 property zoning.

However, it must be noted that D-18 would also be consistent with the *Plan*. Staff did not recommend the up-zoning to D-18 for two reasons: first, D-18 intends to have midrise-type developments which aren’t currently in the neighborhood, and second, because it isn’t consistent with the D-15 transition designation that the property already has.

Higher Density Considerations

During the Assembly meeting, several Assembly-members inquired as to whether higher densities could be assigned to the properties.

As discussed above, only one property has the opportunity to be up-zoned further and still be consistent with the *Plan*. This is the 11 acres of land transitioning from RR to D-15. The property could be up-zoned from D-15 to D-18 (adding a potential capacity for 33 more units).

Higher densities could not be achieved within the *Plan* designations for these properties. However, it should be noted that by code, higher densities can be achieved in other zones: MU (no maximum density); MU2 (80 units per acre); LC (30 units per acre); and GC (50 units per acre).

The property between N. Douglas Highway and the property being rezoned D-15 (the Jeep dealership) is zoned LC.

Public Comments and Requests
Staff held a neighborhood meeting for AME2013 0016 on June 24, 2014 but no members of the public attended. Public phone calls and comments were received after the Notice of Recommendation was issued but prior to the Assembly hearing. Comments were again raised before Assembly and the Assembly felt they warranted additional review so the case was remanded to the Commission. Comments received after the remand order and in response to the additional public notice are:

Mr. Fred Yates, neighbor at 5470 N. Douglas Highway, indicated he would like to be included in the rezone.

> *Staff Response: Unfortunately, Mr. Yates' property was not transition zoned so the property was not included within the rezone proposal when it previously reviewed by the Planning Commission. Staff could not consider accommodating Mr. Yates request because the property had not been properly noticed for rezoning. Mr. Yates would need to apply for a rezone though the normal rezone application process.*

Mr. Kody & Sofia Stitz, property owners within the rezone at 5065 N. Douglas Highway, attended the Assembly Hearing to raise objections, met with staff, and submitted written comments. Mr. Stitz's written comments are attached.

> *Staff Response: When meeting with Travis Goddard, CDD Planning Manager, Mr. Stitz raised concerns about the rezone because of advice he was previously given by staff, which indicated that he would be required to apply for a Conditional Use Permit to keep livestock should his property be up-zoned. He indicated that when he purchased the property, his intent was to have rabbits and goats for his children; he felt that the rezone to D-5 would harm his chances for keeping livestock. He also expressed that the City had no right to up-zone his property without his express support.*
>
> *During that conversation, staff indicated that the rezone was intended to serve as an "opportunity creator" and to implement the desired transition to higher zoning as envisioned in the 1980's. It was not intended to limit his property rights or prevent him from keeping livestock. Staff also indicated that he was well within his rights to ask to be removed from the up-zone.*

Staff indicated they would recommend support of his removal from the up-zone given his concerns about the effect on his property, but warned him that should he wish to rezone the property in the future, he would have to incur those rezone costs himself. Mr. Stitz understood and agreed to this because he stated he had no intention to rezone the property.

Mr. Stitz's written comments expand on the concerns he has for his property. His comments reflect opposition to the up-zoning of not only his property but all the up-zoned parcels in the neighborhood. His attached comments include three points:

1. The property will not be able to be used for its intended purpose;
2. The proposed rezone is inconsistent with the long-standing transitional zoning of the neighborhood; and
3. The rezone is not consistent with neighborhood preservation measures and other parts of the *Comprehensive Plan*.

Staff Response –

1. Staff assumes Mr. Stitz' s primary concern is about the density of neighboring development affecting the enjoyment of his property, not his actual ability to live on his property.

Staff sympathizes with this concern but staff's responsibility is to take guidance from the Comprehensive Plan which is in turn implemented by the zoning code. As discussed above, all the rezoned zoning designations approved by the Planning Commission are consistent with the Comprehensive Plan or with the transition zoning designation.

2. Regardless of the zoning, each property owner has the ability to choose not to develop their property. The rezone of the property creates the opportunity for owners to increase the value of their land by adding additional dwellings or subdividing the property. Each property owner was given four separate mailings informing them that the zoning of their property would be changed. This provided them with ample opportunity to contact CDD and request to be excluded from the rezone or up-zone. Mr. Stitz is the only owner who has contacted CDD and requested to be excluded from the up-zone (but not the transition rezone).

It also needs to be noted that while the property has had a long history of having transitional zoning, the provision of public services were only recently provided. Therefore, the unfulfilled transition shouldn't be seen as a matter of neighborhood choice or tradition; it was a function of the fiscal realities associated with capital budgeting. Now that the transition trigger has been met, Staff had no choice but to view the up-zoning of the property as consistent with the Comprehensive Plan.

3. Mr. Stitz points out that there are inconsistencies between the zoning and the Plan. There also seem to be inconsistencies within the Plan itself. In the past, staff and the Planning Commission have tried to balance the competing interests and desires outlined within the Plan. To this end, staff regularly has to weigh different parts of the Plan and

apply their best professional judgment to assign them priority depending upon how they apply to a given case.

Mr. Stitz expressed that "the adopted Plan in its entirety must be adhered too and used as a basis for decisions." This is only true to a point because it assumes that consistency is black and white. For example, this logic assumes that a D-3 residential development can meet every goal for residential development, as well as all the goals for commercial development, industrial development, natural resource preservation, historic preservation, etc. For this reason, consistency with the "entire plan" is a review standard that would be nearly impossible to meet for any project. Staff instead reviews for general consistency and ensures that projects are generally fulfilling the goals of the community as set forth in the Plan.

The stated goals for housing support the approval of increased densities wherever possible, as consistent with the Plan. This logic is what led to the staff recommendation as outlined in the staff report. Staff still finds this logic to be sound.

After meeting with Mr. Stitz, staff understands his concerns. Staff indicated to Mr. Stitz they would recommend that his property be excluded from the up-zone and simply be rezoned to the transition zone of D-3. Staff made this conditional upon his understanding that such an action would mean that any future rezone request for the property would be done at the owner's expense.

Recommendation

Staff recommends that the Planning Commission reaffirm its recommendation of approval of AME2013 0016 with the exception of Parcel 6D0701010040, which should be rezoned to D-3 as requested by the property owner.

NOTICE OF PUBLIC HEARING

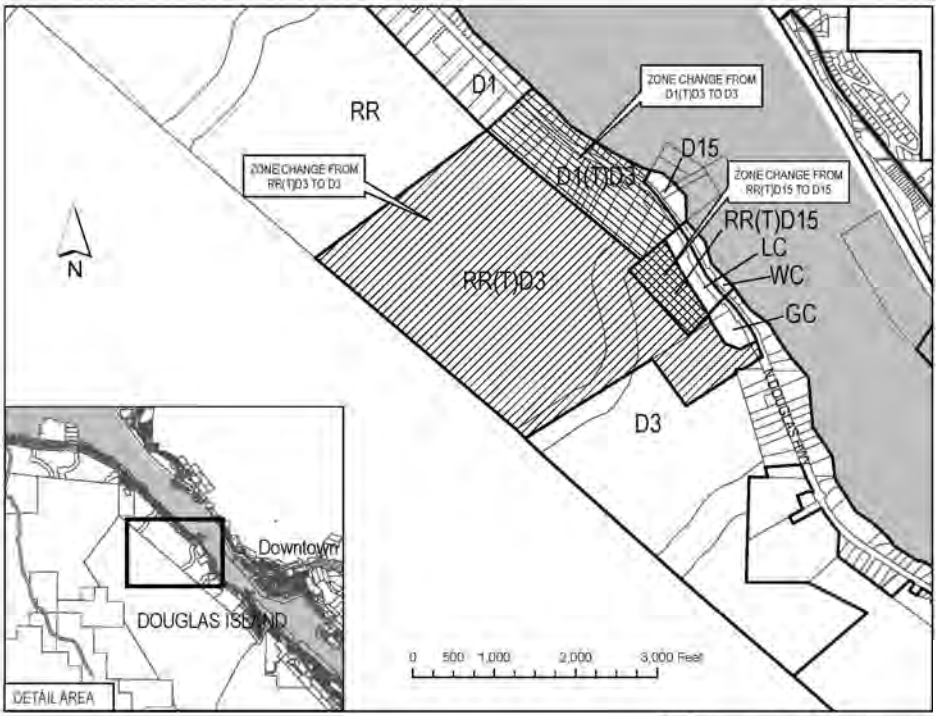

City & Borough of Juneau
Community Development Department
155 S Seward Street • Juneau, Alaska 99801

SHIP TO:

CITY/BOROUGH OF JUNEAU
ALASKA'S CAPITAL CITY

PROPOSAL: **Residential rezone of 43 parcels along North Douglas Highway.**

The Planning Commission has the discretion to consider and recommend alternative rezoning designations other than that being proposed by the applicant or recommended by staff.

File No:	AME2013 0016	Applicant:	City and Borough of Juneau
To:	Adjacent Property Owners	Property PCN:	Multiple
Hearing Date:	November 25, 2014	Owner:	Multiple
Hearing Time:	7:00 PM	Size:	285 Acres
Place:	Assembly Chambers	Zoned:	RR(T)D3 and RR(T)D15
	Municipal Building	Site Address:	1.3 — 1.9 Mile of N. Douglas Highway
	155 South Seward Street	Accessed Via:	N. Douglas Highway
	Juneau, Alaska 99801		

PROPERTY OWNERS PLEASE NOTE:

You are invited to attend this Public Hearing and present oral testimony. The Planning Commission will also consider written testimony. You are encouraged to submit written material to the Community Development Department 14 days prior to the Public Hearing. Materials received by this deadline are included in the information packet given to the Planning Commission a week before the Public Hearing. Written material received after the deadline will be provided to the Planning Commission at the Public Hearing.

CITY/BOROUGH OF JUNEAU
ALASKA'S CAPITAL CITY

If you have questions, please contact Travis Goddard at travis.goddard@juneau.org or at 586-0715.

Planning Commission Agendas, Staff Reports and Meeting Results can be viewed at www.juneau.org/plancomm.

Date notice was printed: November 5, 2014

NOTICE OF PUBLIC HEARING

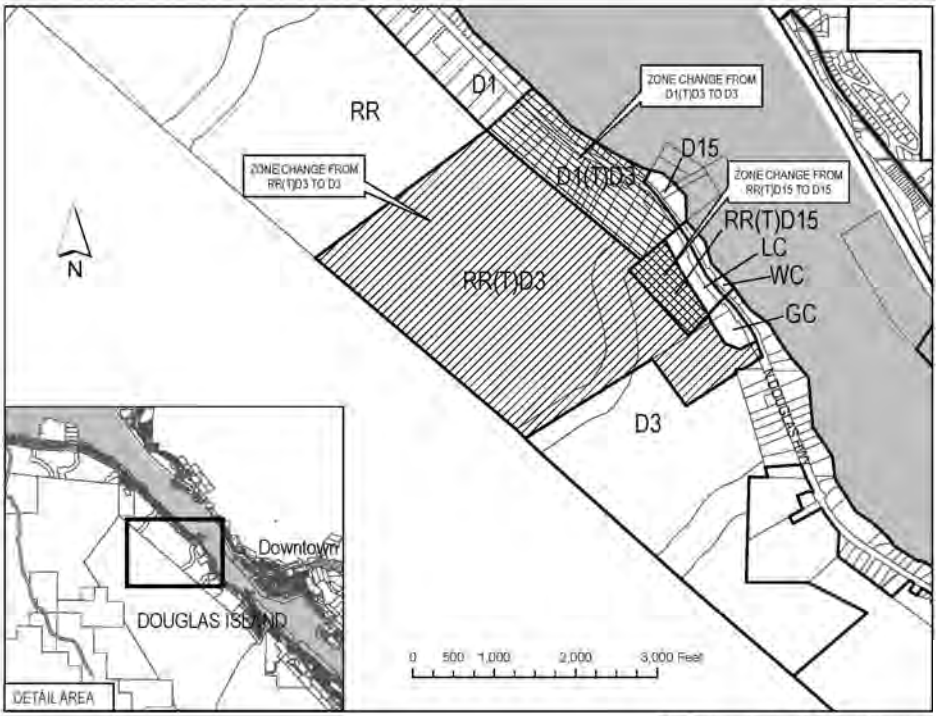

City & Borough of Juneau
Community Development Department
155 S Seward Street • Juneau, Alaska 99801

SHIP TO:

CITY/BOROUGH OF JUNEAU
ALASKA'S CAPITAL CITY

PROPOSAL: **Residential rezone of 43 parcels along North Douglas Highway.**

File No:	AME2013 0016	Applicant:	City and Borough of Juneau
To:	Adjacent Property Owners	Property PCN:	Multiple
Hearing Date:	November 25, 2014	Owner:	Multiple
Hearing Time:	7:00 PM	Size:	285 Acres
Place:	Assembly Chambers	Zoned:	RR(T)D3 and RR(T)D15
	Municipal Building	Site Address:	1.3 — 1.9 Mile of N. Douglas Highway
	155 South Seward Street	Accessed Via:	N. Douglas Highway
	Juneau, Alaska 99801		

PROPERTY OWNERS PLEASE NOTE:

You are invited to attend this Public Hearing and present oral testimony. The Planning Commission will also consider written testimony. You are encouraged to submit written material to the Community Development Department 14 days prior to the Public Hearing. Materials received by this deadline are included in the information packet given to the Planning Commission a week before the Public Hearing. Written material received after the deadline will be provided to the Planning Commission at the Public Hearing.

If you have questions, please contact Chrissy McNally at 586-0761 or christine.mcnally@juneau.org

CITY/BOROUGH OF JUNEAU
ALASKA'S CAPITAL CITY

Planning Commission Agendas, Staff Reports and Meeting Results can be viewed at www.juneau.org/plancomm.

Date notice was printed: October 28, 2014

Travis Goddard

From: Christine McNally
Sent: Tuesday, November 04, 2014 1:21 PM
To: 'travis.goddard8@gmail.com'; Travis Goddard
Subject: FW: Rezone

For the North Douglas rezone memorandum

-----Original Message-----
From: Fred Yares [mailto:fred12yates@gmail.com]
Sent: Tuesday, November 04, 2014 12:13 PM
To: Christine McNally
Subject: Rezone

Good morning, My name is Fred Yates. My address is 5470 n Douglas I am on the boundary of the residential rezone proposal along north Douglas hwy. I would like my property to be included in this rezone. When I spoke to you on Monday you suggested I write an email to request my property to be included in this rezone.

Thank you for the consideration.
Fred Yates

Sent from my iPhone

Planning Commission
& Community Dev. Dep.

155 S. Seward St.
Juneau, AK 99801

RECEIVED
NOV 10 2014
PERMIT CENTER

Re: North Douglas Highway Re-zone

Dear Planning Commission and Community Development,

This letter is to inform you that I fully and completely object to any proposed increases in zoning beyond D-3 at my property located at 5065 N. Douglas Highway. Further, I object to any neighborhood wide increases in zoning, beyond D-3, of the neighborhood. Juneau is in the midst of a housing crisis and I am extremely happy that the CBJ is taking steps to solve the problem. Please continue to work towards fixing the housing problem, BUT you must act in measured and predictable way and within the bounds of the CBJ Comprehensive Plan. My family and I have three primary reasons for our objections; 1: We will not be able to use our property for the reasons we purchased it. 2: The proposed re-zone departs from the long-standing transitional zoning of the neighborhood. 3: The re-zone is not consistent with neighborhood preservation measures found in the Comp Plan. Please read this letter in its entirety and give it due and fair consideration as you discuss the proposed re-zone on 25 Nov 2014.

1. My family and I purchased our home at 5065 N. Douglas Hwy in July 2014. We chose this home because it sat on a large wooded lot situated amongst other large wooded lots on the uphill side of N. Douglas Highway, making for a very rural feeling neighborhood. Additionally, my children love animals and desperately want to have pet rabbits and a miniature goat. City ordinances preclude having "farm" animals (even pets) in D-5 zoning or higher so we needed to find a home zoned D-1 or D-3 and one large enough to support the animal. Because we needed a large lot, a rural feeling neighborhood and zoning that allowed animals we were very restricted in the potential homes available to us.

   We eventually found a house, but had to pay a high price for it because large lots in rural settings are in very short supply in Juneau. When we purchased this home we did our due diligence beforehand and understood that this home was zoned D-1(T)D-3. We prefer the D-1 zoning and had hoped it would last many years. Even knowing a re-zone to D-3 could happen we were still willing to buy the house because it would still be fairly rural and allow farm pets. Now, within just a couple months of buying our dream house/property all of our aspirations, dreams and enthusiasm have been destroyed because of a sudden and unpredictable change in zoning. I realize there is a housing crisis in Juneau but do not solve this crisis by forcibly changing our neighborhood from D-1(T)D-3 to D-5.

2. This neighborhood has been zoned D-1(T)D-3 since the late 1980's. That means that the City of Juneau has been signaling to both current and future landowners for more than 20+ years that this land will eventually transition to D-3. Never ever has there been any indication whatsoever that this land would transition to D-5. I reviewed public land records for all parcels located in my neighborhood that are part of the up-zone proposal to D-5. What I found was that 23 of the 24 privately owned lots have been sold and re-purchased since 1990. What that means is that 96% of current owners have made a clear and overt financial decision to buy land zoned D-1(T)D-3. Changing the neighborhoods zoning to anything other than D-3 would be reckless, irresponsible and undermine a landowner's ability to rely on the CBJ's adopted planning documents to make purchasing decisions.

   It is improper for CDD and the Planning Commission to assume that any landowner who is not overtly fighting against the zoning change agrees with it and desires D-5 zoning. Modern families are extremely busy and many do not engage the democratic process and provide the government with input. Do not assume that a landowner's inaction to fight against the up-zone means they agree with it. The landowners have already spoken. Just like me, they have spoken through the overt act of spending thousands of dollars on a home and land. Since 1990, 96% of the homes have been repurchased which is a clear and undeniable action by the landowners that they wanted land zoned D-1(T)D-3. I understand there may be a landowner or two who now desires to up-zone their land to D-5 and develop it. This landowner purchased land zoned D-1(T)D-3; if they now desire D-5 land they should seek out and buy land zoned D-5 or apply for a zoning change on his or her own and undergo the appropriate review process. Do not assume anyone not fighting against the re-zone desires to up-zoned and certainly do not undertake a bulk up-zone to D-5 when every CBJ planning and zoning documents for the last 20+ years has indicated a change to D-3 and landowners like myself have made buying decisions based on these plans.

3. Lastly, a change to D-5 is not fully consistent with the adopted 2013 Comprehensive Plan. Page 14 of the Comp Plan describes rural areas of Juneau as follows: "Rural: Rural areas can be found in the forested areas west of the Mendenhall River and in Thane, North Douglas… Vacant parcels within rural neighborhoods that are provided municipal sewer service should be developed at suburban densities, although with site design and massing that reflects the rural character of the neighborhood." The adopted plan in its entirety must be adhered to and used as a basis for decisions. Please do not ignore this section of the plan that explicitly notes N. Douglas is a rural area and directs the rural character of the neighborhood to be maintained. D-5 zoning is not rural and will negatively impact the rural feel of the neighborhood.

Please also note the following excerpt from page 144 of the Plan where it cautions against using land use categories as the sole basis for development decisions. "These [land use] descriptions are intended to describe the overall character of development for each land use category and are not intended to be firm or restrictive definitions." This neighborhood is categorized as ULDR and has been since the late 1980's. There is a great deal of land categorized as ULDR in Juneau that is also zoned D-5. Places like the Mendenhall Valley, Lemon Creek, and the Twin Lakes are correctly categorized as ULDR/D-5 combination. However, N. Douglas is a very different area with a very different neighborhood character and massing. Several neighborhood areas off of Back Loop road and near Auke Lake area are correctly classified as ULDR/D-1 or ULDR/D-3 because of their rural nature. North Douglas is very similar and should have its rural character preserved by zoning it no higher than ULDR/D-3. The Plan allows for D-3 zoning in a ULDR land categorization. D-3 is what CBJ has planned for this area for over 20 years and represents a good fit for the area because it maintains the rural character of the area while allowing a reasonable level of in-fill development to occur.

Thank you for taking the time to read this letter. It is my family's sincere hope that you have read this letter with an open and un-biased mindset. Yes, there is a housing crisis in Juneau that must be solved. Please work towards solving the housing problem, but do not do it on the backs of private landowners who already have a home. For over 20 years, people like me have made home buying decisions based on the D-1(T)D-3 zoning density of this neighborhood. We have plans and aspirations for our land and the sudden push to up-zone the land to D-5 is negatively impacting us. A D-3 zoning density is consistent with the Comp Plan, will maintain the rural feel and character of the neighborhood and yet allow a reasonable level of additional development. Please stick with the original plan and transition this neighborhood D-3.

Sincerely,

Kody and Sofia Stitz

5065 N. Douglas Hwy
Juneau, AK 99801

MEMORANDUM

CITY/BOROUGH OF JUNEAU
155 South Seward Street, Juneau, Alaska 99801

DATE: August 18, 2014

TO: Planning Commission

FROM: Chrissy McNally, Planner
Community Development Department

FILE NO.: AME2013 0016

PROPOSAL: Rezone property from RR(T)D3, D1(T)D3, and RR(T)D15 to D3 and D15 along North Douglas Highway.

Applicant:	City and Borough of Juneau
Property Owner:	City and Borough of Juneau, Multiple
Property Address:	North Douglas Highway
Site Size:	285 Acres
Zoning:	RR(T)D3, D1(T)D3, RR(T)D15
Comprehensive Plan Land Use Designations:	MDR, ULDR, RDR, SC (Maps K &L)
Utilities:	CBJ water and sewer
Access:	North Douglas Highway
Existing Land Use:	vacant, single family, duplex, multifamily, commercial
Surrounding Land Use:	North- Rural Reserve/D1 South- D3/D18 East - Gastineau Channel West - Rural Reserve

CITY/BOROUGH OF JUNEAU
ALASKA'S CAPITAL CITY

VICINITY MAP

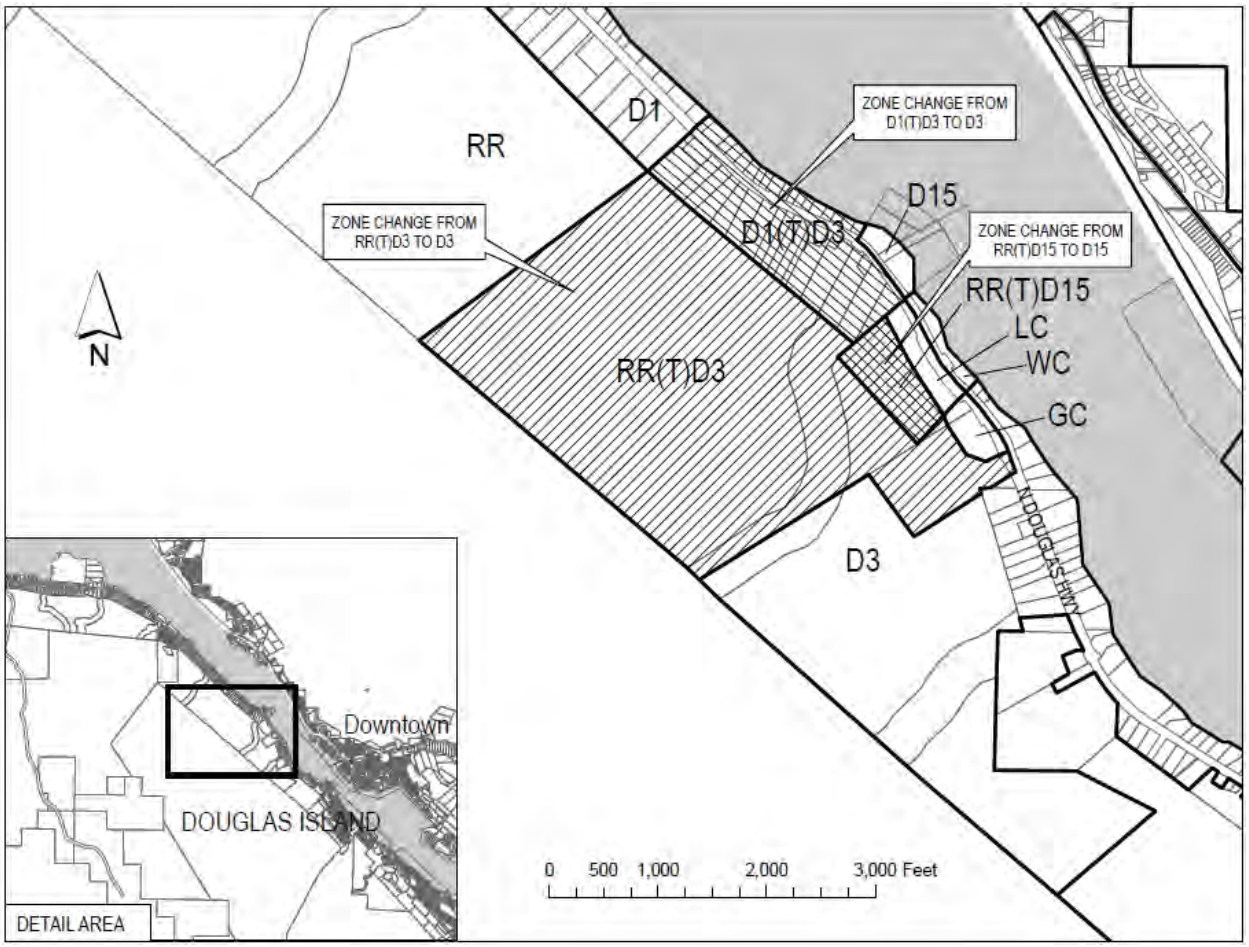

Attachment A: Comprehensive Plan Land Use Maps
Attachment B: 2009 Traffic impact analysis study areas map
Attachment C: Ordinance 89-07
Attachment D: Ordinance 99-01AM
Attachment E Ordinance 97-01AM
Attachment F: Public notice
Attachment G: Neighborhood meeting notice

Parcel Code No.	Legal Description	Current Zoning	Transition Zone	Acres
6D0701000031	USMS 2225 Tract 1	RR	D15	11
6D0611000010	USS 4605 FR	RR	D3	200
6D0611000012	USS 4605 FR	RR	D3	18.35
6D0601150011	Channel View Lot 1	RR	D3	15.41
6D0701000020	Triangle Lot 3	RR	D3	1.03
6D0701010171	USS 2960 Lot 7A	D1	D3	0.83
6D0701010172	USS 2960 Lot 7B	D1	D3	2.75
6D0701010161	USS 2960 Lot 8B	D1	D3	1.5
6D0701010162	USS 2960 Lot 8A	D1	D3	1.5
6D0701010150	USS 2960 Lot 9A	D1	D3	1.67
6D0701010140	USS 2960 Lot 9B	D1	D3	1.66
6D0701010130	USS 2960 Lot 10 FR	D1	D3	1.88
6D0701010120	USS 2960 Lot 10 FR	D1	D3	1.92
6D0701010110	Deep Lots Lot 11A	D1	D3	1.04
6D0701010100	Deep Lots Lot 11B	D1	D3	1.08
6D0701010090	Deep Lots Lot 11C	D1	D3	1.13
6D0701010080	Deep Lots Lot 11D	D1	D3	1.17
6D0701010070	USS 2960 Lot 12A	D1	D3	1.26
6D0701010071	USS 2960 Lot 12B	D1	D3	2.23
6D0701010060	USS 2960 Lot 13 FR	D1	D3	0.29
6D0701010050	USS 2960 Lot 13 FR	D1	D3	3.39
6D0701010040	USS 2960 Lot 14 Tract 2	D1	D3	3.2
6D0701010030	USS 2960 Lot 14 Tract 1	D1	D3	0.61
6D0701010020	USS 2960 Lot 15	D1	D3	3.54
6D0701010010	USS 2960 Lot 16	D1	D3	1.53
6D0701080160	USS 2960 Lot 6 Tract 1	D1	D3	0.28
6D0701080152	USS 2960 Lot 6 Tract 2	D1	D3	0.72
6D0701080151	USS 2960 Lot 6 Tract 2A	D1	D3	0.38
6D0701080140	USS 2960 Lot 5 Tract A	D1	D3	0.44
6D0701080130	USS 2960 Lot 5 Tract B	D1	D3	0.44
6D0701080120	USS 2960 Lot 5 Tract C	D1	D3	0.43
6D0701080111	Scott Lot 6	D1	D3	0.28
6D0701080112	Scott Lot 7	D1	D3	0.27
6D0701080100	Scott Lot 5	D1	D3	0.41
6D0701080090	Scott Lot 4	D1	D3	0.26

6D0701080080	Scott Lot 3	D1	D3	0.26
6D0701080070	Scott Lot 2	D1	D3	0.27
6D0701080060	Scott Lot 1	D1	D3	0.24
6D0701080050	Graham Lot 3A	D1	D3	0.28
6D0701080040	Graham Lot 3B	D1	D3	0.23
6D0701080030	Graham Lot 3C	D1	D3	0.24
6D0701080020	Graham Lot 3D	D1	D3	0.25
6D0701080010	USS 2960 Lot 2 FR	D1	D3	0.31

BACKGROUND

The rezone of 43 parcels along North Douglas Highway extending from mile 1.3 to 1.9 was initiated by Community Development staff. The area is identified as a transition zone, RR(T)D3, RR(T)D-15, and D1(T)D3. The area has remained a transition zone in anticipation of City sewer installation. Sewer installation was completed in the summer of 2013.

Prior to 1984 the area was a mixture of zoning districts that included Low Density Multi-Family Residential District (RML), Residential Waterfront Commercial District (CWR), Residential District (R12) and Residential Reserve (R40). In 1987 zoning districts were amended on a borough wide scale. The zoning for these parcels was changed to RR(T)D3 and D1(T)D3.

Discussion

The area discussed in this staff report is currently zoned D1(T)D-3, RR(T)D3, and RR(T)D-15. CBJ§49.70, Article VII addresses transition zones. CBJ§49.70.700 states that a transition zone is an overlay zoning district for certain lands that are set aside for higher density development after public water and sewer have been provided. It further states that the increase in density will take place at the time public services are provided. Public water has been available for some time, and public sewer installation was completed in the summer of 2013.

The following language is provided by the CBJ Land Use Code to describe the zoning designations:

CBJ 49.25.200 describes the Rural Reserve (RR) zoning district as follows:

> *The RR, rural reserve zoning district, is intended for lands primarily in public ownership managed for the conservation and development of natural resources <u>and for future community growth</u>. In addition, recreation cabins, lodges and small seasonal recreational facilities may be allowed.* (emphasis added)

CBJ 49.25.210 (a) describes the D-1 zoning district as follows:

> *The D-1, residential district, is intended to accommodate primarily single-family and duplex residential development in areas outside the urban service boundary at a density of one unit per acre. <u>Certain D-1 zoned lands, however, may exist within the urban service boundary in transition areas if public sewer or water are absent but planned for. The D-1 classification will be changed to a higher density upon provision of services.</u>* (emphasis added)

CBJ 49.25.210 (b) describes the D-3 zoning district as follows:

> *The D-3, residential district is intended to accommodate primarily single-family and duplex residential development at a density of three dwelling units per acre.* ***D-3 zoned lands are primarily located outside the urban service boundary where public utilities are not provided****. The density reflects the existing pattern of development of properties in the district. There is a limited amount of D-3 zoned lands located within the urban service boundary.* ***These are lands for which a lower density is deemed appropriate or, in the case of transition zones, where the zoning will be changed to a higher density when sewer and water are provided****.* (emphasis added)

CBJ 49.25.210 (e) describes D-15 as follows:

> *The D-10 and D-15 residential districts are intended to accommodate primarily multi-family residential development at a density of ten and 15dwelling units per acre respectively. These are relatively low-density multi-family districts.*

The 2013 Comprehensive Plan land use maps K and L show a variety of land use designations in the area (See attachment A). Four parcels are partially designated Medium Density Residential (MDR). These include parcels 6D0601150011 are 6D0701000020 designated for transition from RR to D3 and parcel 6D0701000031, designated for transition from RR to D-15. A portion of this 14.7 acre parcel was zoned Light Commercial with Ordinance 89-07 (See attachment C). Additionally, the southeast corner of the nearly 200 acre parcel, 6D0611000010, is designated MDR.

The approximately 200 acres of CBJ owned land designated for transition from RR to D3 is shown primarily as Urban Low Density Residential (ULDR). In addition, there is a 400 foot wide buffer along Eagle Creek which is designated SC which means Stream Protection Corridor. The total area of RR(T)D3 is approximately 216 acres.

The remaining 38 parcels are designated for transition from D1 to D3. Of these parcels, 26 are shown as ULDR on the Comprehensive Plan maps and 12 are shown as Rural Dispersed Residential (RDR).

The plan describes MDR (page 147) as follows:

> *These lands are characterized by urban residential lands for multi-family dwelling units at densities ranging from 5 to 20 units per acre. Any commercial development should be of a scale consistent with a residential neighborhood, as regulated in the Table of Permissible Uses (CBJ 49.25.300).*

The plan describes ULDR (page 147) as follows:

> *These lands are characterized by urban or suburban residential lands with detached single-family units, duplex, cottage or bungalow housing, zero-lot-line dwelling units and manufactured homes on permanent foundations at densities of one to six units per acres. Any commercial development should be of a scale consistent with a single-family residential neighborhood, as regulated in the Table of Permissible Uses (CBJ 49.25.300).*

The plan describes RDR (page 147) as follows:

> *These lands are characterized by dispersed, very low density* ***development not provided with municipal sewer or water****. Densities are intended to permit one dwelling unit per acre or larger lot sizes, based on existing platting or the capability of the land to accommodate on-site septic systems and wells. Uses may also include small-scale visitor-oriented, seasonal recreational facilities.* (emphasis added)

The plan describes SC (page 145) as follows:

> *On CBJ-owned lands, a SC-Stream Protection Corridor designation serves to protect anadromous fish streams and their tributaries from development that could cause pollution, erosion, depletion of groundwater infiltration or otherwise could degrade the stream corridor and its biological functions. Upon first designation, a 200 foot wide corridor on both sides of the bank would be included within the designated corridor along anadromous fish water bodies included within the Alaska Department of Fish and Game Inventory adopted by the CBJ Assembly. However, this "base" designation should be revised and the length and breadth of the specific corridor should be determined by a scientific/biological assessment of the functionality and habitat value of the particular stream segment; the width and length of the protected corridor may be more or less than the 200-foot base protection zone. No development should be permitted other than passive, non-motorized trails, their support systems and, under special circumstances, roads and parking areas necessary to the maintenance and protection of the resources therein or to facilitate managed non-motorized public access for education and passive recreation activities. These lands should be zoned to prevent residential, commercial, and industrial development, as well as resource extraction activities. The CBJ should retain ownership of these lands.*

CBJ 49.75.120 places restrictions on rezoning. One of these restrictions is that a rezoning shall not allow uses which violate the land use maps of the comprehensive plan.

ANALYSIS

Zone Change Initiation

> CBJ §49.75.110. INITIATION. A rezoning may be initiated by the director, the commission or the assembly at any time during the year. A developer or property owner

may initiate a request for rezoning in January or July only. Adequate public notice shall be provided by the director to inform the public that a rezoning has been initiated.

1. Were the proposed zone changes initiated by the property owner during the appropriate time frame?

   Yes. Application for AME2013 0016 was submitted by the director on December 20, 2013.

2. Did the director provide adequate public notice through newspaper advertising, property owner mailings and requiring a public notice sign to be posted on-site as required by CBJ§49.15.230, Public Notice Requirements?

   Yes. The public was notified through newspaper advertising published on Friday, August 15, 2014 and Monday, August 25, 2014, mailings to owners of all properties within 500 feet of the subject properties, and a public notice sign posted on-site for two weeks prior to the Planning Commission hearing on the rezone request.

Restrictions and Procedure

CBJ §49.75.120. RESTRICTIONS ON REZONINGS. Rezoning requests covering less than two acres shall not be considered unless the rezoning constitutes an expansion of an existing zone. Requests which are substantially the same as a rezoning request rejected within the previous twelve months shall not be considered. A rezoning shall not allow uses which violate the land use maps of the comprehensive plan.

The CBJ Land Use Code provides minimum restrictions for zone change requests. This proposal conforms to these restrictions as follows:

The entire area, as proposed for rezoning is greater than 2 acres. The proposed area for transition from RR and D1 to D-3 is 274 acres and is an expansion of an existing zoning district. The area proposed for transition from RR to D-15 is 11 acres and not part of an expansion of an existing zoning district. However, the proposed rezone to D-15 is consistent with the MDR designation shown on the maps of the Comprehensive Plan and is greater than 2 acres.

CBJ§49.70, Article VII addresses Transition Zones. CBJ§49.70.700 states that a transition zone is an overlay zone district for certain lands that are set aside for higher density development after public water and sewer have been provided. It further states that the increase in density will take place at the time public services are provided. As stated previously, public water has been available for some time, and public sewer installation was completed in the summer of 2013.

Land use

The area is made up of 43 individual lots. The majority of the transition area is a nearly 200 acre portion of a CBJ owned parcel. Of the 38 parcels designated to transition to D3, eight are vacant twenty of them are developed with single family homes; five are developed with single family homes with accessory apartments; two are developed with duplexes and three with triplexes. These lots range in size from10,018 square feet to 3.54 acres.

The approximately 200 acres of CBJ owned land designated for rezoning is part of a larger vacant 654 acre parcel. This parcel was part of the Community Development Department's 2006 Buildable Sites study. Buildable land was considered to have less than an 18% slope and absent of Category A or B wetlands. The area in the transition zone is a bench consisting mostly of Category B wetlands. The 2006 study determined only 10% or 65 acres of the entire 654 acre parcel developable. There is currently no developed access road to this parcel. CBJ Lands and Resources Manager, Greg Chaney provided the following comments on the rezone:

> "*Given that this area has some locations that represent development challenges, in the future multifamily zoning might be appropriate so that development could be clustered in the best sites. Until this time, the proposed D3 zoning will serve our needs as a placeholder.*"

The parcel designated for partial transition to D-15 is the site of an inactive gravel pit. A portion of the parcel is zoned Light Commercial. As previously stated, this parcel was partially rezoned to Light Commercial in 1989. The purpose of this rezone was to provide an appropriate designation for a permitted gravel pit. In 1997 the remaining portion of the lot was rezoned from RR(T)D3 to RR(T)D-15 with the approval of MAP-ZC96-03 in order to create a better transition from Light Commercial for future development (Attachment E).

To the east of the Light Commercial zone is parcel 6D0701000020, partially zoned General Commercial. This rezone occurred with Ordinance 99-01AM (Attachment D). This lot is restricted to motor vehicle sales and repairs and is the site of Mike Hatch Jeep. The area of parcel 6D0701000020 designated to be rezoned from RR to D3 is vacant.

Density

The requested D-3 zone would allow for up to 3 dwellings per acre. Already developed lots could potentially accommodate additional dwelling units each based on individual lot size. Current zoning will allow for 1 unit per acre on each of the 43 lots in the transition area. A total of 44 units currently exist on the subject parcels. An upgrade in zoning density provides for a potential maximum of 161 dwelling units.

Without considering topographical and other design constraints, the eleven privately owned vacant lots combined area could potentially support 54 units. The maximum potential density could be as high as 259 units if the entire area was built out to its highest potential.

The requested D-15 zone would allow for 15 units per acre. The subject area is 11 acres, therefore, this site could allow for 165 units.

A D-3 and D-15 zoning designation would allow for some lots to be subdivided. For lots currently zone RR(T)D-3 and D-1(T)D-3 the minimum lot size will decrease from 36,000 square feet to 12,000 square feet with a transition to D3. The parcel to transition from RR to D-15 will have the minimum lot size decrease from 36,000 to 5,000 square feet.

However, according to the CBJ roadway classification maps North Douglas Highway is classified as a minor arterial. Based on CBJ 49.40.130(b) lots resulting from a subdivision of land seeking new access via a minor arterial must meet the D1 zoning district lot area standards.

This requirement is found in the "Access" section of Title 49. This section is intended to minimize the number of driveways, and vehicles accessing the minor arterial. Therefore, excluding the large CBJ owned parcel, 17 lots would eligible for subdivision without the need for an approved variance. However, most lots will be able to add dwelling units without subdividing. Any new access onto North Douglas Highway would require approval of the Alaska Department of Transportation and Public Facilities (DOT&PF). DOT&PF classifies North Douglas Highway as a collector.

While solicited, comments from the Fire Marshall were not received specific to this rezone. The Fire Marshall will be consulted regarding any future development proposals.

Comprehensive Plan

As mentioned earlier, the entire area is shown on Maps K and L (pgs 161 & 162) of the 2013 Comprehensive Plan. The area is shown as Rural Dispersed Residential (RDR), Urban Low Density Residential (ULDR), and Medium Density Residential (MDR) and the area around Eagle Creek as a Stream Protection Corridor (SC).

Parcels 6D0601150011, 6D0701000020, and 6D0611000010 are each either in part or in whole designated for transition to D-3 and are designated as MDR on the Comprehensive Plan maps. A D-3 zoning designation is not consistent with the MDR designation which calls for 5 to 20 units per acre. A zoning designation of D-5, D-10, D-15, or D-18 would be consistent with the MDR land use designation. However, rezoning to any zone other than D-3 will require approval by the Assembly.

Parcel 6D0701000031 is designated for transition to D-15. This parcel is designated as MDR on the Comprehensive Plan maps. The D-15 zone is consistent with the MDR designation.

For those parcels zoned D-1(T)D-3 and the remainder of the large CBJ owned parcel, a zoning designation of D-3 is not entirely consistent with the ULDR designation provided by the Comprehensive Plan maps. The ULDR designation calls for 1 to 6 units an acre and is intended

for common wall development, which is allowed in the D-5 zoning district but not in the D-3 zoning district. These parcels could be rezoned to D-5 and be more consistent with the ULDR designation. D-5 is consistent with the maps of the comprehensive plan but would require approval by the Assembly.

Further inconsistency exists between those parcels zoned D-1(T)D-3 that are designated RDR by the Comprehensive Plan. An RDR designation is consistent with the D-1 zoning district as it calls for 1 unit an acre and no municipal sewer. These lots now have city sewer service. The RDR land use designation does not align with the provision of city water and sewer. However, given the installation of public sewer and several policies of the Comprehensive Plan that support increased density, a transition to D-3 would be appropriate.

The Comprehensive Plan offers general guidance for residential development:

> **Policy 10.1** (page 129) states it is the policy of the CBJ "to facilitate availability of sufficient land with adequate public facilities and services for a range of housing types and densities to enable the public and private sectors to provide affordable housing opportunities for all CBJ residents."
>
> **SOP2** (page 130) states "Designate sufficient land on the Comprehensive Land Use Maps and zoning maps to provide for a full range of housing types and densities desired by CBJ households. Provide choices in residential neighborhood character such that residents can choose to live in urban, suburban and rural residential settings and neighborhoods."
>
> **Policy 10.3** (page 131) states it is the policy of the CBJ to "facilitate residential developments of various types and densities that are appropriately located in relation to site considerations, surrounding lands uses, and capacity of public facilities and transportation systems."

The proposed rezoning is within Subarea 8 of the 2013 Comprehensive Plan. The Plan (page 190) states that when recognizing the growth potential of this area the limitation of the North Douglas Highway and the Juneau-Douglas Bridge must also be considered. On page 192 *Guideline and Considerations* number 4 states in part that when city water and sewer are provided, more efficient use of the land should be encouraged. It also states that residential densities should be increased when, and where roads, terrain, and other public services would provide carrying capacity for the additional residential population.

Therefore, given the recent installation of City sewer services, this transition to a higher density is in general conformity with the 2013 Comprehensive Plan.

Traffic and Access

As mentioned above, North Douglas Highway and the Juneau-Douglas Bridge create limitations for future development. This is why CBJ commissioned a Traffic Impact Analysis (TIA) prior

to evaluating previous rezoning requests adjacent to the subject area. The conclusions of this TIA are relevant to the rezone considered in this staff report.

The TIA Study Area evaluated potential future traffic impacts along the North Douglas Highway from the roundabout to just past Nelson Creek. The TIA further broke the study area up into three sections. The subject area is within study area 2 (Attachment B). The study concludes that traffic generated by future development along North Douglas Highway will negatively impact the level of service (LOS) at the Douglas roundabout and at the intersection of Egan Drive and 10th Street. On page 3-22 the study estimated how much additional traffic could be added before LOS F is reached. The study concludes that at 10th and Egan the limiting time is PM peak hour. The TIA states the intersection can accommodate 517 additional vehicles before reaching LOS F. For the Douglas roundabout the limiting time is the AM peak hour, and 334 additional vehicles can be accommodated before LOS F is reached.

The TIA also notes that access road schemes for future development in the study area have not been established (pg 3-27). Future driveways and access roads will be subject to the DOT&PF permitting process. However, the TIA recommends that access points for new developments should be aggregated to the extent possible, and access roads should be spaced at least one quarter mile from adjacent access roads.

In response to a request for comment on this rezone DOT&PF expressed concern with future access points and would like to see them limited. DOT&PF commented that it is difficult to comment without specific development plans. Access is addressed with the subdivision ordinance mentioned previously requiring any additional lots that sought new access onto a minor arterial to meet the D-1 zoning district minimum lot size of 36,000 square feet. If access was to be shared with an existing lot, this standard would not apply.

CBJ Title 49 may also require future applications for development to submit traffic impact analyses. This places the burden of mitigation on the developer whose proposal triggers the number of trips that requires mitigation.

Summary

There is an inconsistency with the definition of the D-3 zoning district and transitioning 42 parcels to this zoning designation. As stated on page 6 of this report, the D-3 zoning district is intended to exist primarily outside of the urban service boundary or as the zoning designation before a transfer to a higher density. However, the D-3 zoning designation may be applied where generally lower densities are considered appropriate. Therefore, while D-3 is not entirely inconsistent, a D-5 zoning designation for those lots designated ULDR should be considered.

While density of 3 units per acre is consistent with the ULDR designation of the Comprehensive Plan, it is not consistent with the MDR designation. A D-5 zoning designation is more consistent with the ULDR and MDR designations. Further, a D-15 zoning designation is consistent with

MDR and would great a continuous D-15 zone next to the Light Commercial and General Commercial zones.

A recommendation of D-5 or higher must be approved by the Assembly. Only the transitions to D-3 and D-15 can be approved by the Planning Commission. Should the Planning Commission approve any zoning other than the mapped transitions, staff recommends holding an additional neighborhood meeting before seeking Assembly action.

FINDINGS

After review of the application materials, the CBJ Land Use Code and the CBJ Comprehensive Plan the Director makes the following findings:

1. The request meets the submittal requirements and the rezoning initiation, zone change restrictions and procedural requirements of the CBJ Land Use Code.

2. D-3 zoning substantially conforms to Land Use maps K and L of the Comprehensive Plan for those lots designated as ULDR, RDR and SC.

3. D-15 zoning substantially conforms to Land Use maps K and L of the Comprehensive Plan for those lots designated MDR.

RECOMMENDATION

Staff recommends the following:

1. Approve the zone transition from RR to D-15.

2. Approve the zone transition from D1 to D-3 for those lots designated RDR on the Land Use maps of the Comprehensive Plan.

Additionally, staff recommends consideration of the following:

1. An upzone to D5 for lots designated as ULDR on the Land Use maps of the Comprehensive Plan.

2. An upzone to D-15 for lots designated as MDR on the Land Use maps of the Comprehensive Plan.

Should the Planning Commission approve any zoning other than the mapped transitions, staff recommends holding an additional neighborhood meeting before seeking Assembly action.

2013 Comprehensive Plan Land Use Map

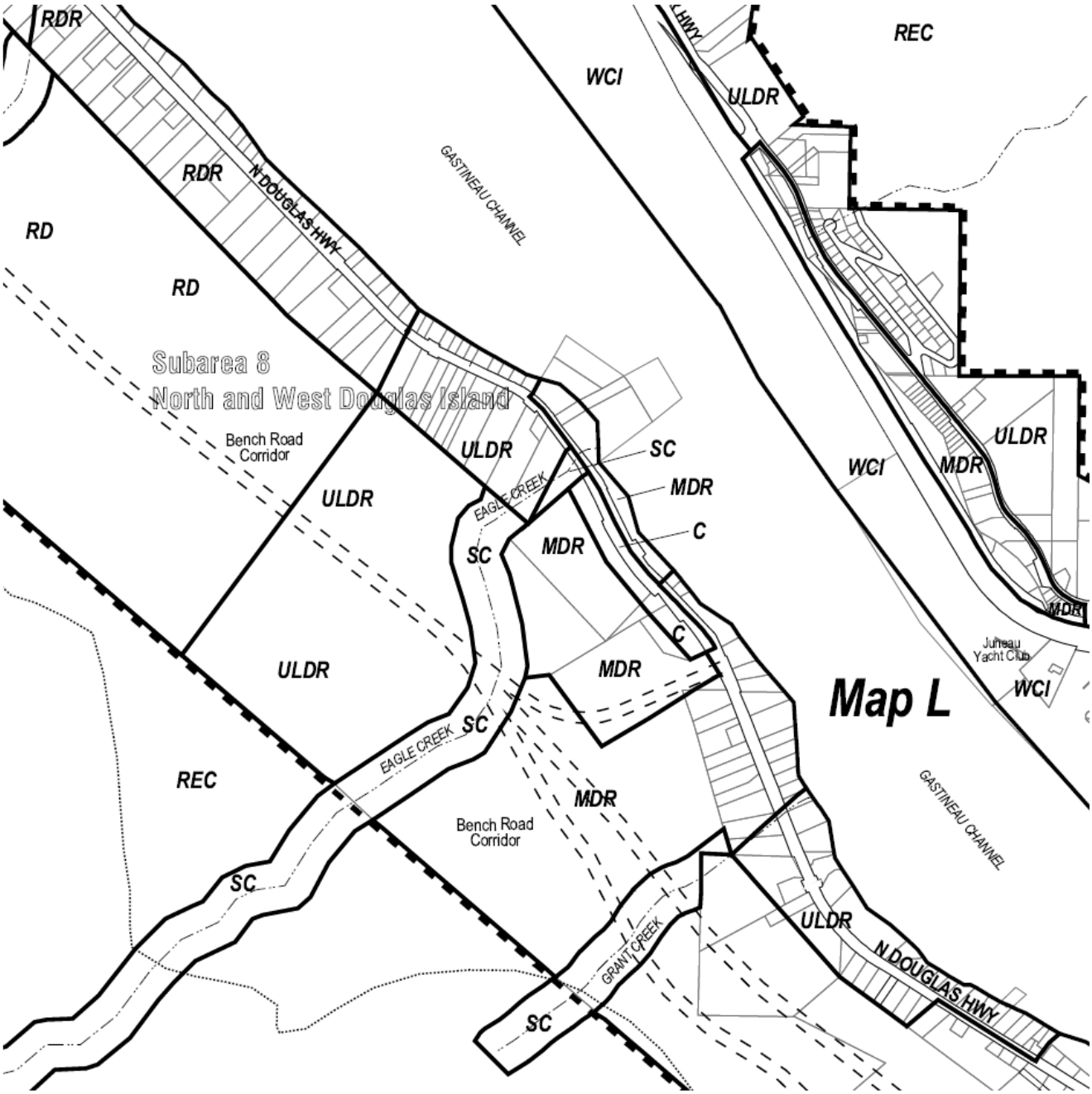

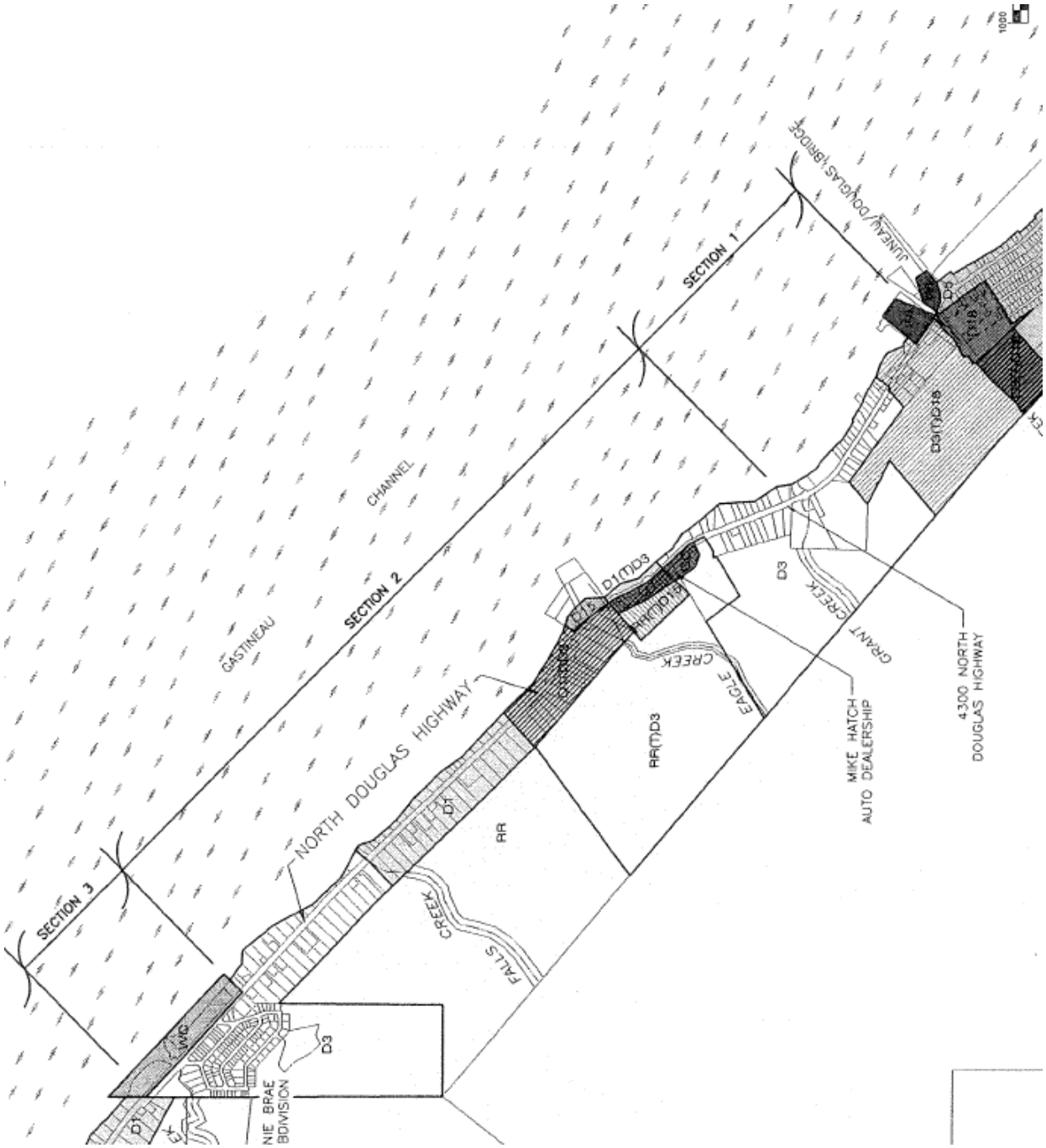
SECTION 1
SECTION 2
SECTION 3
JUNEAU/DOUGLAS BRIDGE
GASTINEAU CHANNEL
NORTH DOUGLAS HIGHWAY
D1(T)D3
D1(T)D18
D3(T)D18
D3
RR(T)D3
RR
D1
LWC
D3
D1
NIE BRAE DIVISION
FALLS CREEK
EAGLE CREEK
GRANT CREEK
MIKE HATCH AUTO DEALERSHIP
4300 NORTH DOUGLAS HIGHWAY

Presented by: The Manager
Introduced: 02/13/89
Drafted by: B.J.B.

ORDINANCE OF THE CITY AND BOROUGH OF JUNEAU, ALASKA

Serial No. 89-07

AN ORDINANCE AMENDING THE OFFICIAL ZONING MAP OF THE CITY AND BOROUGH TO CHANGE THE ZONING OF A PORTION OF LOT 3, U.S. SURVEY 3381 FROM RR(T)D-3 (RURAL RESERVE TRANSITION TO D-3 RESIDENTIAL), TO GC, GENERAL COMMERCIAL; AND TO CHANGE THE ZONING OF A PORTION OF U.S. MINERAL SURVEY 2225 FROM RR(T)D-3 TO LC, LIGHT COMMERCIAL.

BE IT ENACTED BY THE ASSEMBLY OF THE CITY AND BOROUGH OF JUNEAU, ALASKA:

* Section 1. Classification. This ordinance is of a general and permanent nature and shall become a part of the city and borough code.

* Section 2. Amendment of Official Zoning Map. The official zoning map of the city and borough adopted pursuant to CBJ 49.25.110 is amended as shown on the attached Exhibit "A" to change the zoning of a portion of Lot 3, U.S. Survey 3381, from RR(T)D-3 (rural reserve transition to D-3 residential) to GC, general commercial; and to change the zoning of a portion of U.S. Mineral Survey 2225 from RR(T)D-3 to LC, light commercial; with the following conditions:

(a) Access to and from North Douglas Highway shall be restricted to one driveway located in the vicinity of the common property line between Lot 3, U.S. Survey 3381, and U.S. Mineral Survey 2225; and

(b) The owner of Lot 3, U.S. Survey 3381, shall submit a site plan of the automobile dealership located on the property to the design review board for review and approval.

* Section 3. Effective Date. This ordinance shall be effective thirty days after its adoption.

Adopted this 6th day of March, 1989.

Mayor

Attest:

Clerk

Received
on
MAR 05 1999
CBJ
Permit Center

Presented by: The Manager
Introduced: 01/04/99
Drafted by: J.R. Corso

ORDINANCE OF THE CITY AND BOROUGH OF JUNEAU, ALASKA

Serial No. 99-01am

An Ordinance Amending the Official Zoning Map of the City and Borough to Change the Zoning of Lot 2, Channel View Subdivision.

BE IT ENACTED BY THE ASSEMBLY OF THE CITY AND BOROUGH OF JUNEAU, ALASKA:

Section 1. Classification. This ordinance is of a general and permanent nature and shall become a part of the city and borough code.

Section 2. Amendment of Official Zoning Map. The Official Zoning Map of the city and borough adopted pursuant to CBJ 49.25.110 is amended to change the zoning of Lot 2, Channel View Subdivision from RR(T)D3 (Rural Reserve Transitional to D-3 Residential) to GC (General Commercial). The area of changed zoning is shown on the attached Exhibit "A."

Section 3. Conditions. The zone change shall be subject to either of the following sets of conditions, one of which the developer must select and satisfy prior to issuance of any building or development permit for the property:

(a) Option 1.

(1) A driveway permit shall be obtained from the Alaska Department of Transportation and Public Facilities for access to the existing commercial use; all improvements required by the permit shall be completed, and any proposed access solution shall be compatible with existing access restrictions.

(2) The use of the property shall be restricted to motor vehicle sales and repair.

(3) Compliance with all conditions will be determined by the Director of the Community Development Department.

(b) Option 2.

(1) The use of Lot 2, Channel View Subdivision, for a portion of the existing commercial use, and the resulting access to North Douglas Highway, shall be discontinued.

(2) That the existing physical access from Lot 2, Channel View Subdivision to North Douglas Highway be blocked.

(3) The use of the property shall be restricted to motor vehicle sales and repair.

* Section 3. Effective Date. This ordinance shall be effective thirty days after its adoption.

Adopted this 6th day of March, 1989.

Mayor

Attest:

Clerk

Presented by: The Manager
Introduced: 09/15/97
Drafted by: J.R. Corso

ORDINANCE OF THE CITY AND BOROUGH OF JUNEAU, ALASKA

Serial No. 97-38

An Ordinance Amending the Official Zoning Map of the City and Borough to Change the Zoning of a Portion of Tract 1, USMS 2225, an Area Generally Described as 2 Mile North Douglas Highway.

BE IT ENACTED BY THE ASSEMBLY OF THE CITY AND BOROUGH OF JUNEAU, ALASKA:

Section 1. Classification. This ordinance is of a general and permanent nature and shall become a part of the city and borough code.

Section 2. Amendment of Official Zoning Map. The Official Zoning Map of the city and borough adopted pursuant to CBJ 49.25.110 is amended to change the zoning of a portion of Tract 1, USMS 2225, an area generally described as 2 Mile North Douglas Highway, from RR (T) D-3 (Rural Reserve Transitional to Single-Family/Duplex Residential) to RR (T) D-15 (Rural Reserve Transitional to Multi-Family Residential), exclusive of the LC, Light Commercial, portion. The described area is shown on the attached Exhibit "A."

Section 3. Effective Date. This ordinance shall be effective thirty days after its adoption.

Adopted this 6th day of October, 1997.

Dennis Egan, Mayor

Attest:

Marian J. Miller, Clerk

NOTICE OF PUBLIC HEARING

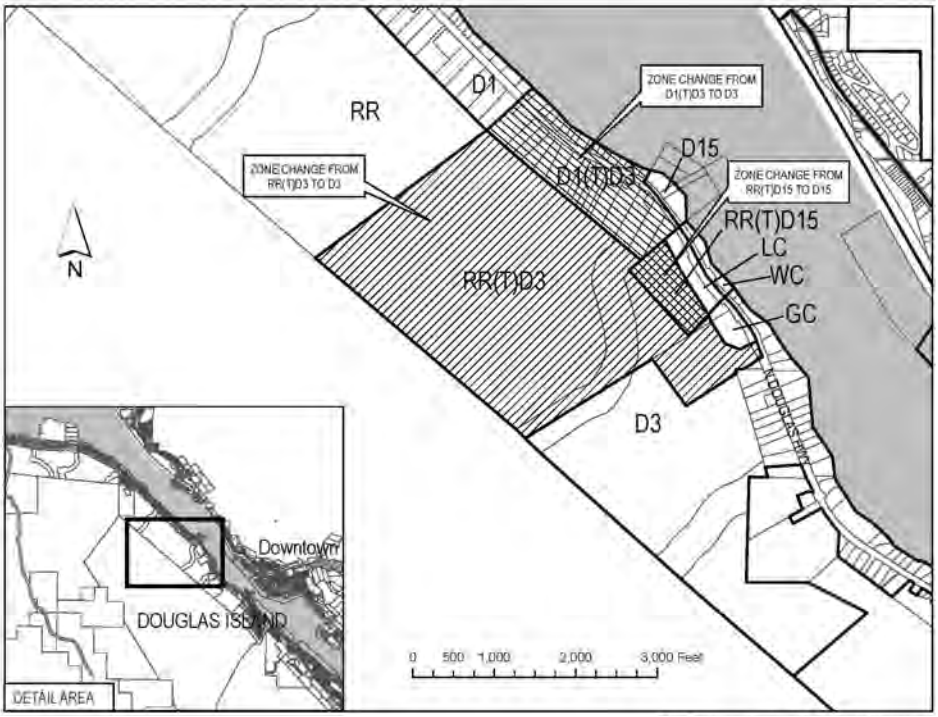

City & Borough of Juneau
Community Development Department
155 S Seward Street • Juneau, Alaska 99801

SHIP TO:

CITY/BOROUGH OF JUNEAU
ALASKA'S CAPITAL CITY

PROPOSAL: **Rezone of approximately 245 acres of RR(T)D3 to D3 and RR(T)D15 to D15 and approximately 40 acres of D1(T)D3 to D3 along North Douglas Highway.**

File No:	AME2013 0016	Applicant:	City and Borough of Juneau
To:	Adjacent Property Owners	Property PCN:	Multiple
Hearing Date:	August 26, 2014	Owner:	Muliple
Hearing Time:	7:00 PM	Size:	285 Acres
Place:	Assembly Chambers	Zoned:	RR(T)D3 and RR(T)D15
	Municipal Building	Site Address:	1.3 — 1.9 Mile of N. Douglas Highway
	155 South Seward Street	Accessed Via:	N. Douglas Highway
	Juneau, Alaska 99801		

PROPERTY OWNERS PLEASE NOTE:

You are invited to attend this Public Hearing and present oral testimony. The Planning Commission will also consider written testimony. You are encouraged to submit written material to the Community Development Department 14 days prior to the Public Hearing. Materials received by this deadline are included in the information packet given to the Planning Commission a few days before the Public Hearing. Written material received after the deadline will be provided to the Planning Commission at the Public Hearing.

If you have questions, please contact Chrissy McNally at 586-0761 or christine_mcnally@ci.juneau.ak.us

CITY/BOROUGH OF JUNEAU
ALASKA'S CAPITAL CITY

Planning Commission Agendas, Staff Reports and Meeting Results can be viewed at www.juneau.org/plancomm.

ATTACHMENT F

Date notice was printed: August 5, 2014

CITY/BOROUGH OF JUNEAU
ALASKA'S CAPITAL CITY

NOTICE OF NEIGHBORHOOD MEETING
FOR TRANSITION ZONE
Assembly Chambers
Wednesday, June 25, 6:30-7:30 p.m.

June 3, 2014

Dear Resident,

You are receiving this letter because your property is zoned either RR(T)D3, RR(T)D15, or D1(T)D3. The CBJ Community Development Department initiated a Zone Change Application for properties in transition zones along mile 1.3 and 1.9 of North Douglas Highway. Enclosed you will find a list of all the properties in the transition area.

The CBJ Community Development Department is hosting a neighborhood meeting to explain the details and the CBJ rezone process. This meeting will be held on Wednesday, June 25, 2014, from 6:30 to 7:30 p.m. in the Assembly Chambers of City Hall.

The purpose of the June 25th meeting is to provide information, respond to questions, and to get a sense of concerns that the neighborhood might have, so issues may be addressed in advance of the formal public hearing with the CBJ Planning Commission. The project has been scheduled for review by the Planning Commission at the August 26th Regular Meeting. Prior to the meeting all landowners within 500 feet of the proposed rezone will receive a separate notice with details on how and where to submit comments or testify on the proposal.

If you have questions or would like more information, please contact Chrissy McNally, Community Development Planner, at 586-0761 or email: christine_mcnally@ci.juneau.ak.us.

Enclosure: List of properties to be rezoned

cc: File number AME2013 0016

155 So. Seward Street, Juneau, Alaska 99801-1397

Proposed Rezone of 15.41 Acres North Douglas Highway TDLH, LLC.

Neighborhood Meeting
March 11, 2021

Agenda

1. Welcome and Introductions
2. Community Development Department (CDD) discusses
   a. Proposal
   b. Analysis
   c. Rezone review process
3. Comments from applicant
4. Open Discussion
5. Closing and Follow-up Information

Purpose of Neighborhood Meeting

The meeting is intended to increase understanding of the proposed rezone and the review process through presentations and dialogue among stakeholders.

Stakeholders include neighborhood residents, larger Juneau community, applicant and CDD.

Overview

Site Size:	15.41 acres
Existing Zoning:	D-15 (Multi-family, 15 du/acre)
Utilities:	City water and sewer
Access:	North Douglas Highway
Existing Land Use:	Vacant

What is proposed?

A revision to the official Zoning Atlas of the CBJ

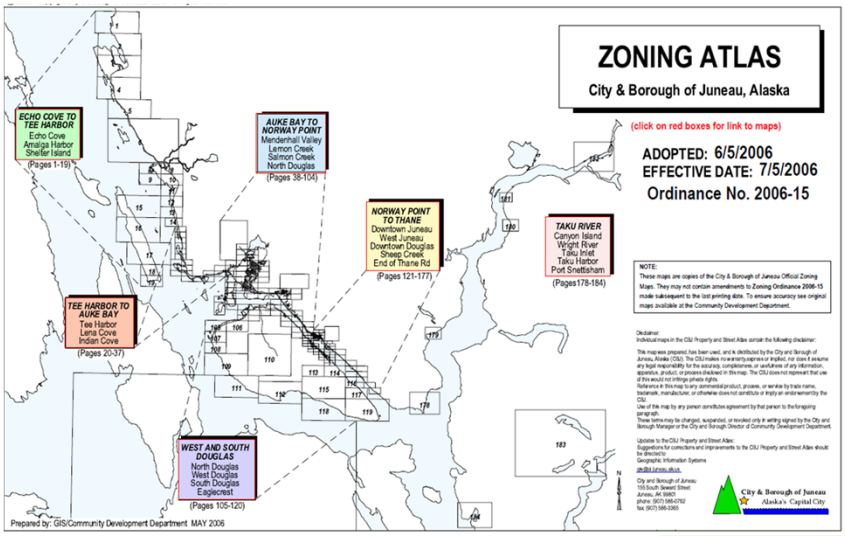

Current Zoning

D-15

The **D-15, residential district**, is intended to accommodate primarily multi-family development at a density of 15 units per acre. These are relatively low-density multi-family districts.

Current Zoning

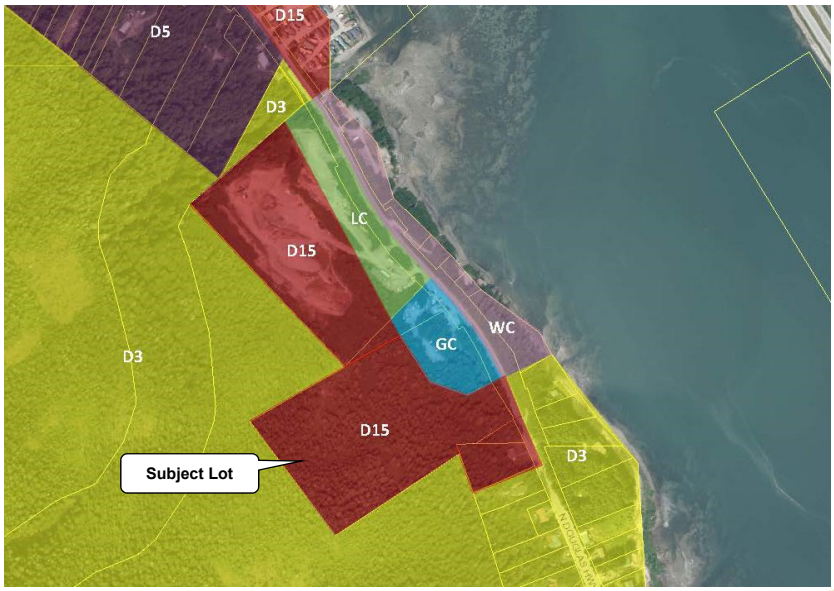

Preferred Rezone Request

FROM:

D-15 zoning

TO:

The **GC, commercial district**, is intended to accommodate most commercial uses. Commercial activities are permitted outright in the zone except for those few uses that are listed as conditional uses to ensure compatibility. Residential development is allowed in mixed- and single-use developments in the general commercial district. GC zoned lands are **located in the urban service boundary and are served or can be served by public water and sewer.**

Residential development is allowed in GC zoning and can have a density of up to 50 units per acre.

Proposed Rezone 1

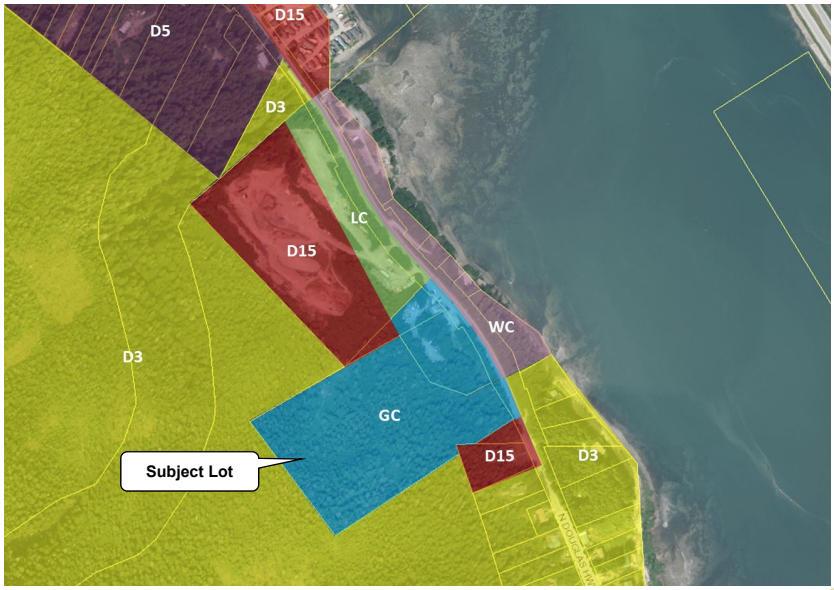

Alternative Rezone Request

FROM:

The **D-15 zoning**

TO:

The **LC, light commercial district**, is intended to accommodate commercial development that is less intensive than that permitted in the general commercial district. Light commercial districts are primarily located adjacent to existing residential areas. Although many of the uses allowed in this district are also allowed in the GC, general commercial district, they are listed as conditional uses in this district and therefore require commission review to determine compatibility with surrounding land uses. A lower level of intensity of development is also achieved by stringent height and setback restrictions. Residential development is allowed in mixed- and single-use developments in the light commercial district. LC zoned lands are **located in the urban service boundary and are served or can be served by public water and sewer.**

Residential development is allowed in LC zoning and can have a density of up to 30 units per acre.

Proposed Rezone 2

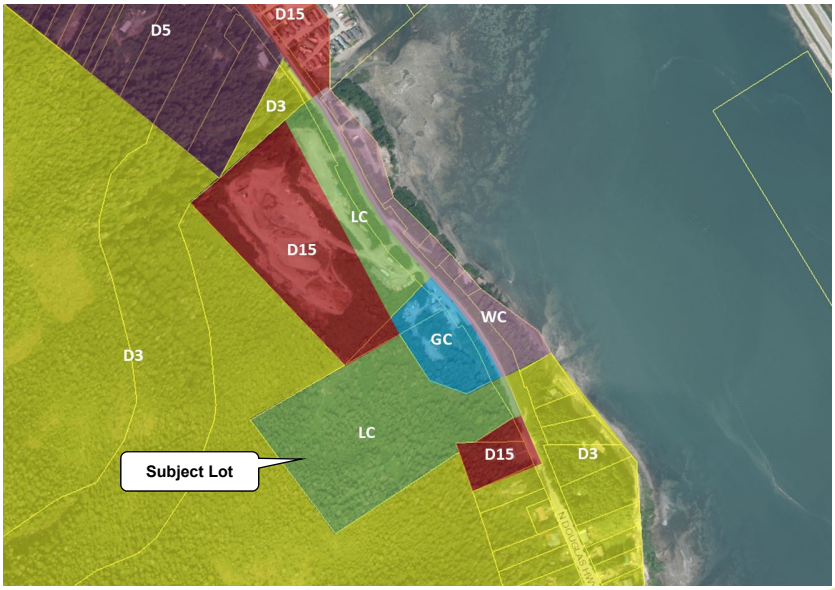

Proposed Rezone 3

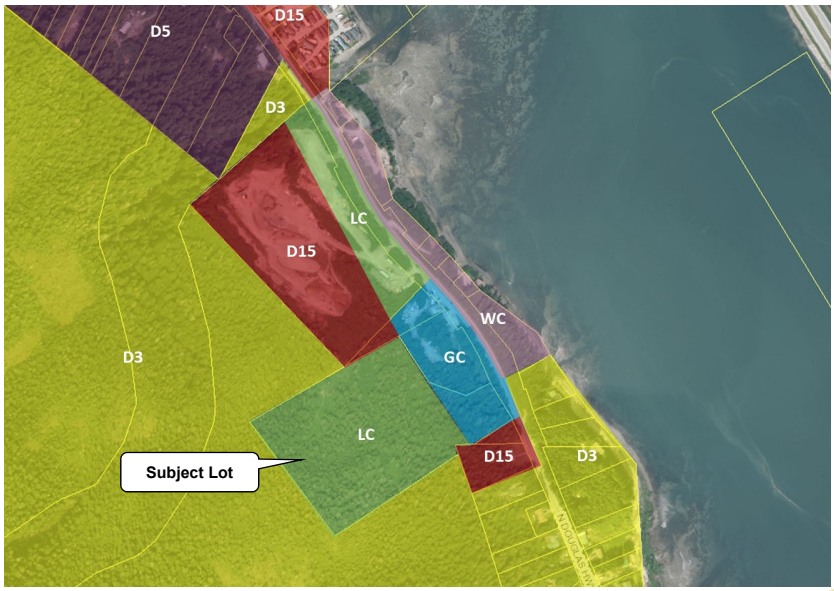

Rezone Request

Table of Dimensional Standards Existing site 15.41 acres	Current Zoning D-15 (15 du/acre)	Proposed Zoning GC (50 du/acre)	Proposed Zoning LC (30 du/acre)
Maximum Number of Units	231 units	771 units	462 units
Maximum Height Limit	35 feet	55 feet	45 feet
Maximum Lot Coverage	50%	None	None
Vegetative Cover	30%	10%	15%
Minimum Lot Size	5,000 sq. ft.	2,000 sq. ft.	2,000 sq. ft.
Minimum Lot Width	50 feet	20 feet	20 feet
Minimum Lot Depth	80 feet	60 feet	80 feet
Minimum Front Yard Setback	20 feet	10 feet	25 feet
Minimum Street Side Yard Setback	13 feet	17 feet	10 feet
Minimum Side Yard Setback	5 feet	10 feet	10 feet
Minimum Rear Yard Setback	15 feet	10 feet	10 feet

Rezone Request

CUP: Conditional Use Permit, Review by Planning Commission

DEPT: Review by CDD with Building Permit

	Current Zoning D-15	Proposed Zoning GC	Proposed Zoning LC
Single-family residential, detached	DEPT	DEPT	DEPT
Multifamily	DEPT/CUP	DEPT/CUP	DEPT/CUP
Bed & Breakfasts, Rooming Houses	CUP	DEPT/CUP	DEPT/CUP
Hotels, Motels	Not allowed	DEPT/CUP	DEPT/CUP
Marijuana retail or cultivation	Not allowed	CUP	CUP
Offices less than 1,000 sq. ft.	CUP	DEPT	DEPT
Rock Crushing	Not allowed	Not allowed	Not allowed
Elementary and secondary schools	CUP	CUP	CUP
Tennis, racquetball, squash courts, skating rinks, exercise facilities, swimming pools, archery ranges	CUP	DEPT/CUP	DEPT/CUP
Sand and gravel operations	Not allowed	CUP	CUP
Mining Operations	CUP	Not allowed	Not allowed

Urban Service Boundary

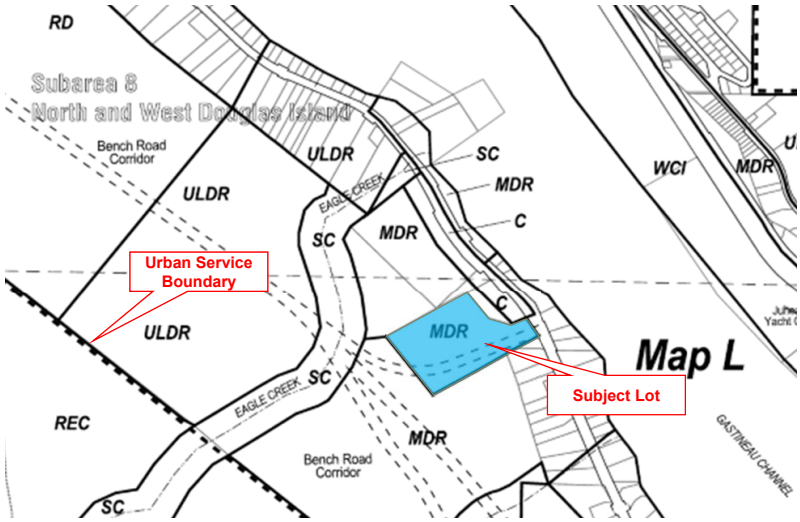

Bench Road Corridor and Access

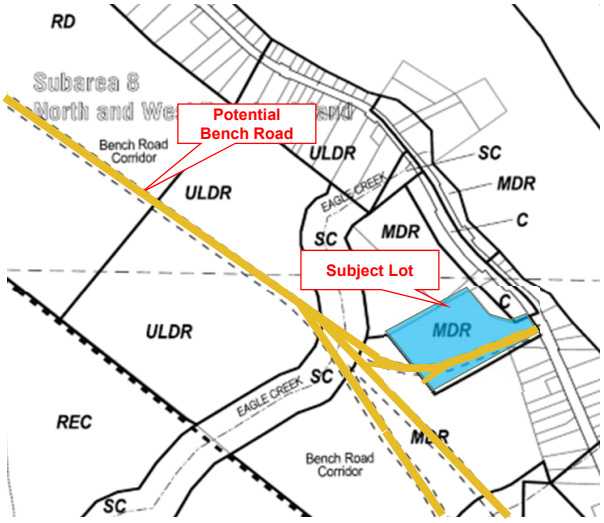

Rezone Process

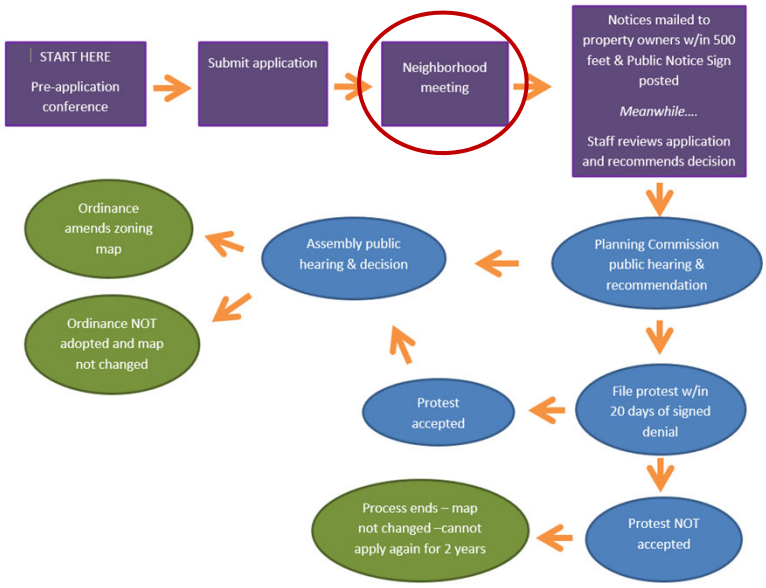

Planning Commission Review & Recommendation

Next Steps

Now through March 21st
Comments received during this time will be included in the staff report to the Planning Commission

March 22nd through Noon April 12th
Comments received during this time will be sent directly to the Planning Commission

Hearing: April 13th at 7:00pm
A public hearing will be held where you can testify before the Planning Commission

April 14th
Results posted

A rezone decision by the Planning Commission can be protested by filing a written protest with the City Clerk within 20 days of the decision.

Contact

Joseph Meyers, Planner
joseph.meyers@juneau.org
(907) 586-0466

https://library.municode.com/ak/juneau/codes/code_of_ordinances?nodeId=PTIICOOR_TIT49LAUS

https://juneau.org/index.php?gf-download=2017%2F08%2F20170316UPDATEComp.Plan2013WEB.pdf&form-id=22&field-id=11&hash=44bf8467abf6aacec02114d42e16e845d6a7d6c9ebb1b73a4e0e299b018299a8

AME2021 0001 – Public Meeting

March 11, 2021, 6:00 P.M

Proposed rezone of 15.41 acres on North Douglas Highway

Presentation by Joseph Meyers

Presentation by Travis Arndt

6 public attendees

Q: Does CDD understand that the applicant has not specified a specific intention or reason to change the zoning designation to fit the application?

CDD Staff: As the applicant mentioned, he is aiming to expand possible uses to include non-residential boat storage.

Q: What is the feasibility of the bench road, and when could that possibly happen? If it is the one I'm thinking of, it has a very narrow access to the highway, and a high traffic area. I imagine it could be challenging to pull boats in and out. I'm thinking the bench road might be the better access, and if the bench road might be the primary intent.

CDD Staff: The bench road, at this point, is a Comprehensive Plan proposal, keeping options open with a few different alignments. There is some property at the top of Cordova that is transition zoned. That means it cannot be higher density until a bench road is constructed. The bench road would probably not come that far out North Douglas. It is not on the books, but there is recognition that the access would be helpful in the future. The Comprehensive Plan is long range and visionary.

The applicant stated they are not doing this to be part of the bench road.

Applicant: I am not into giving the city a free easement. If the city was asking about access, and it worked with the layout of the property, but not a big fan of building roads for others. Not much gain for the users of the lot, as it is very expensive. Not doing it for the bench road.

C: It is nice to see the lot locations on the big screen, to see how they are laid out. It would be helpful to have a photograph of the space available between houses where the access is along the highway.

Q: I assume that space has been confirmed adequate. What size vehicles would be anticipated at his development?

Applicant: We usually work with the Alaska Department of Transportation and Public Facilities when we have a proposal similar to this. Frontage would be next to Mike Hatch, with frontage of about 200 feet.

AME 2021 0001
A request to rezone15.41 acres from D-15 to GC

Staff recommends approval to D15(T)LC with two conditions.

Planning Commission Meeting
May 11, 2021

CITY AND BOROUGH OF JUNEAU
ALASKA'S CAPITAL CITY

Commission Duties

CBJ 49.75.130(a),

The Commission may recommend Assembly approval, approval with modifications or denial of a rezone request.

<u>Options</u>

- Recommend approval
- Deny rezone request
- Recommend different zoning districts than what is requested by the applicant or recommended by staff
- May determine the boundary of the area to be rezoned
  - This means that if the Commission wishes to do so, the zone district boundary line may be moved from its current location, as long as it is found to be in substantial conformance with the Comprehensive Plan

CITY AND BOROUGH OF JUNEAU
ALASKA'S CAPITAL CITY

Rezone Requirements

CBJ 49.75.110 Initiation

A developer or property owner may initiate a request for rezoning in January or July. Adequate public notice shall be provided by the director to inform the public that a rezoning has been initiated.

CBJ 49.75.120 Restrictions on Re-zoning

Rezonings must be more than two acres or an expansion of an existing zone. Requests which are substantially the same as a rezoning request rejected within the previous 12 months shall not be considered.

49.75.120 Restrictions on Rezonings

A rezoning shall only be approved upon a finding that the proposed zoning district and the uses allowed therein are in substantial conformance with the land use maps of the comprehensive plan

CITY AND BOROUGH OF JUNEAU
ALASKA'S CAPITAL CITY

Overview & Existing Conditions

Existing Zoning: D-15 (Multi-family, 15 du/acre)

Comprehensive Plan Land Use Designation: MDR (Medium Density Residential)

Utilities: CBJ Water & Sewer

Access: North Douglas Highway

Existing Land Use: Vacant, undeveloped

CITY AND BOROUGH OF JUNEAU
ALASKA'S CAPITAL CITY

Current Zoning

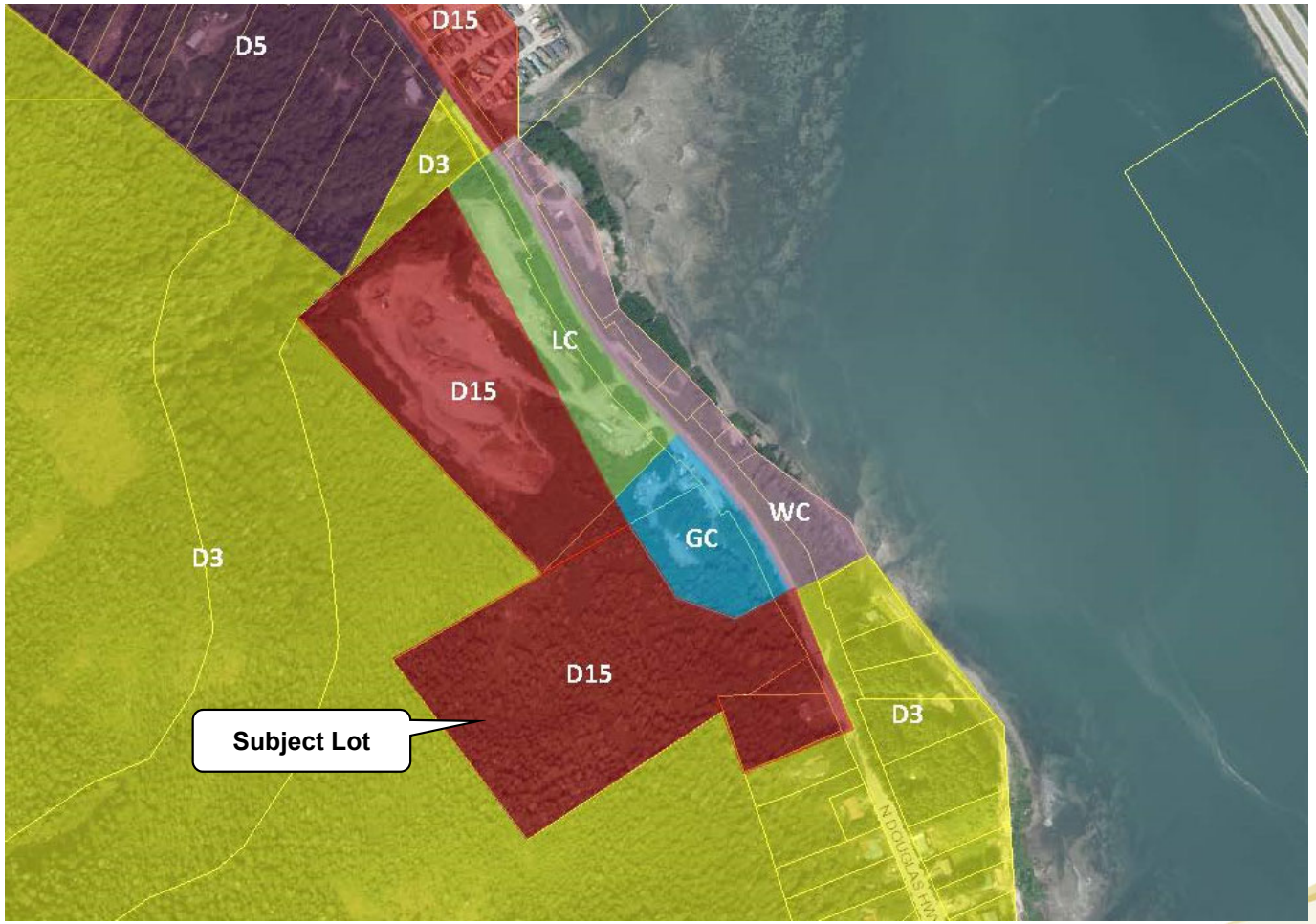

Comprehensive Plan Land Use Designation

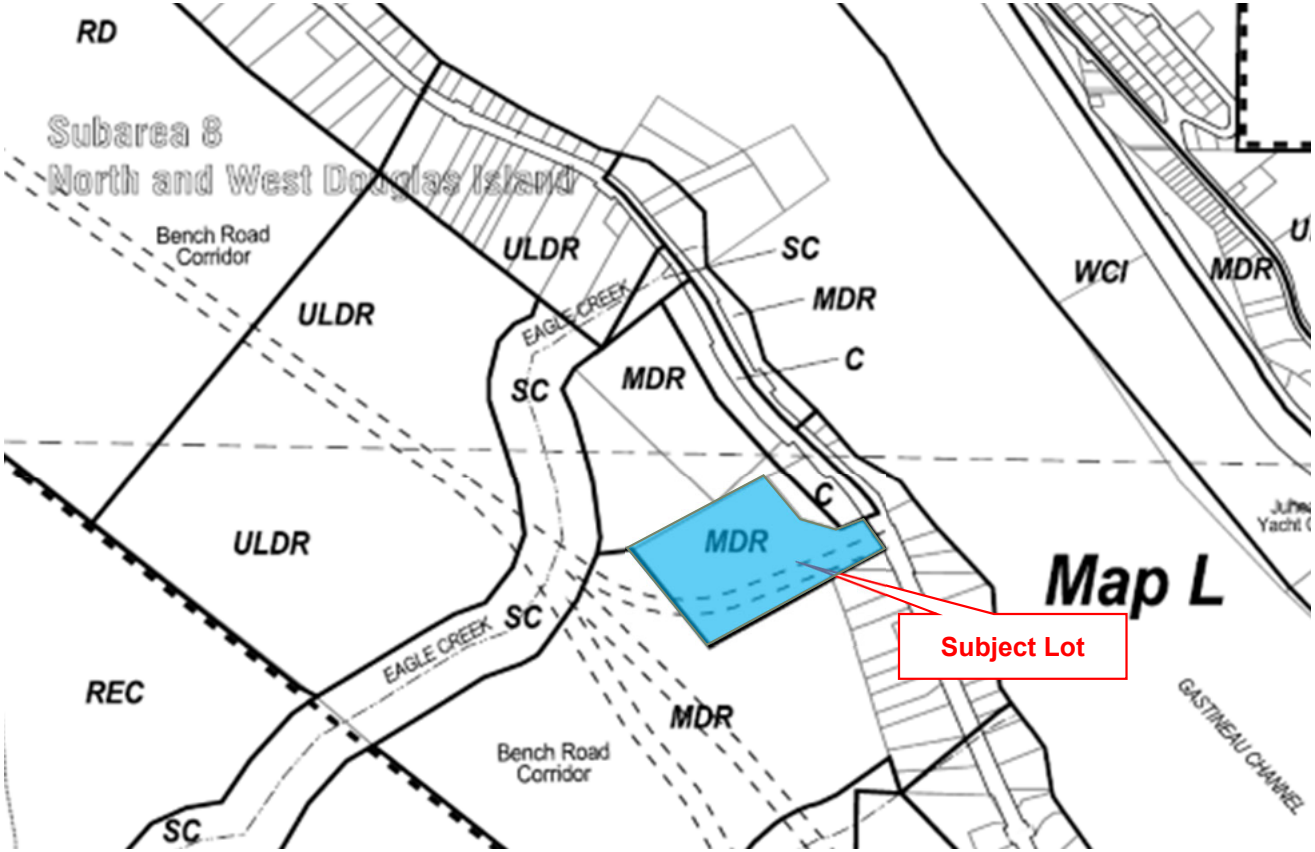

Comprehensive Plan Land Use Designation

Medium Density Residential (MDR)

These lands are characterized by urban residential lands for multifamily dwelling units at densities ranging **from 5 to 20 units per acre**. Any commercial development should be of a scale consistent with a residential neighborhood, as regulated in the Table of Permissible Uses (CBJ 49.25.300). (emphasis added)

Rights-of-way & Traffic

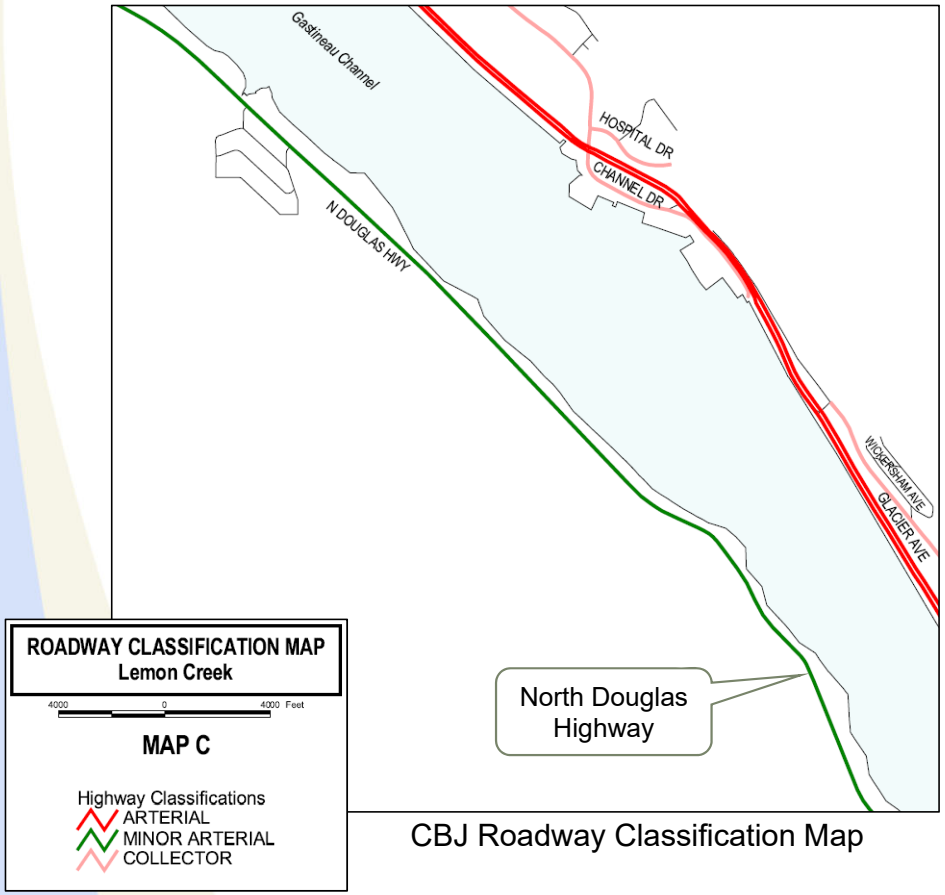

CBJ Roadway Classification Map

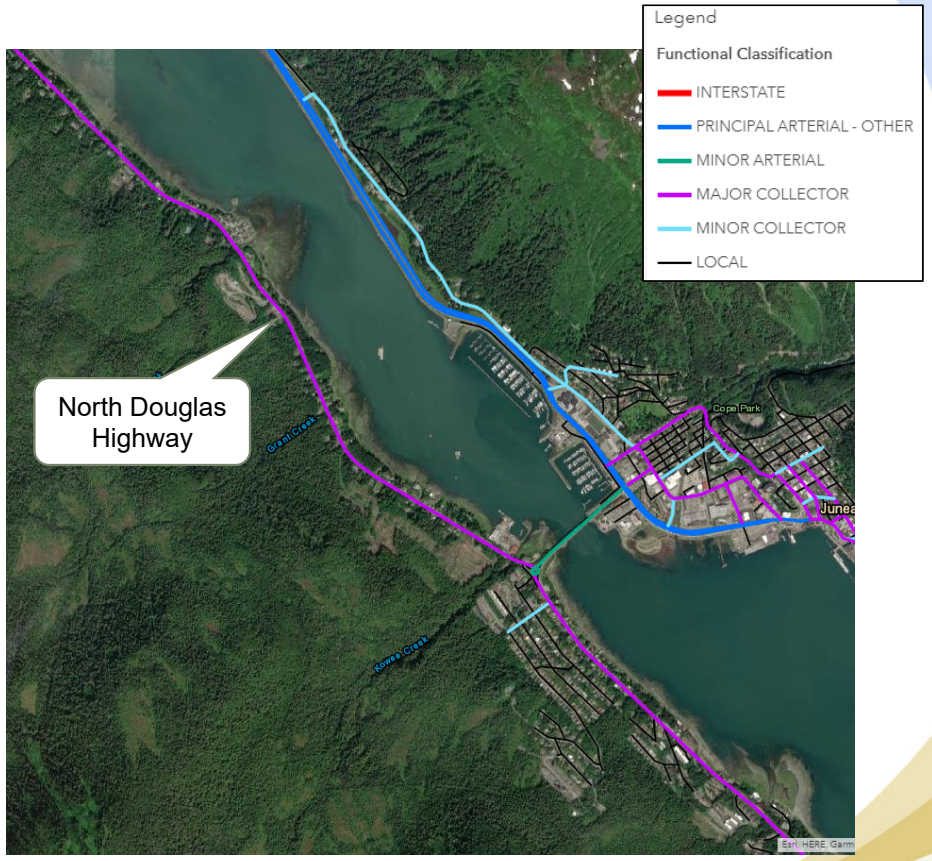

DOT&PF Roadway Classification Map

CITY AND BOROUGH OF JUNEAU
ALASKA'S CAPITAL CITY

Rights-of-way & Traffic

Table 16- Existing Level of Service Summary – AM Peak Hour			
Location	LOS[1]	Delay[2]	V/C[3]
Egan/10th	E	57.0	1.12
Douglas Hwy/NDH	B	12.5	0.77

1. LOS = level-of-service
2. Average control delay for intersection (sec/veh)
3. V/C = volume to capacity ratio

Table 17 - Existing Level of Service Summary – PM Peak Hour			
Location	LOS[1]	Delay[2]	V/C[3]
Egan/10th	D	51.0	1.17
Douglas Hwy/NDH	A	8.4	0.65

1. LOS = level-of-service
2. Average control delay for intersection (sec/veh)
3. V/C = volume to capacity ratio

Table 18- Future Level of Service Summary – AM Peak Hour									
Location	D-10 Development			D-15 Development			D-18 Development		
	LOS[1]	Delay[2]	V/C[3]	LOS	Delay	V/C	LOS	Delay	V/C
Egan/10th	F	103.1	1.30	F	125.9	1.50	F	361.9	3.11
Douglas Hwy/NDH	F	149.7	1.17	F	343.7	1.38	F	519.3	1.52

1. LOS = level-of-service
2. Average control delay for intersection (sec/veh)
3. V/C = volume to capacity ratio

Tables 16, 17, & 18.
Source: 2009 Traffic Impact Analysis, North Douglas Highway & Roundabout

CITY AND BOROUGH OF JUNEAU
ALASKA'S CAPITAL CITY

Rights-of-way & Traffic

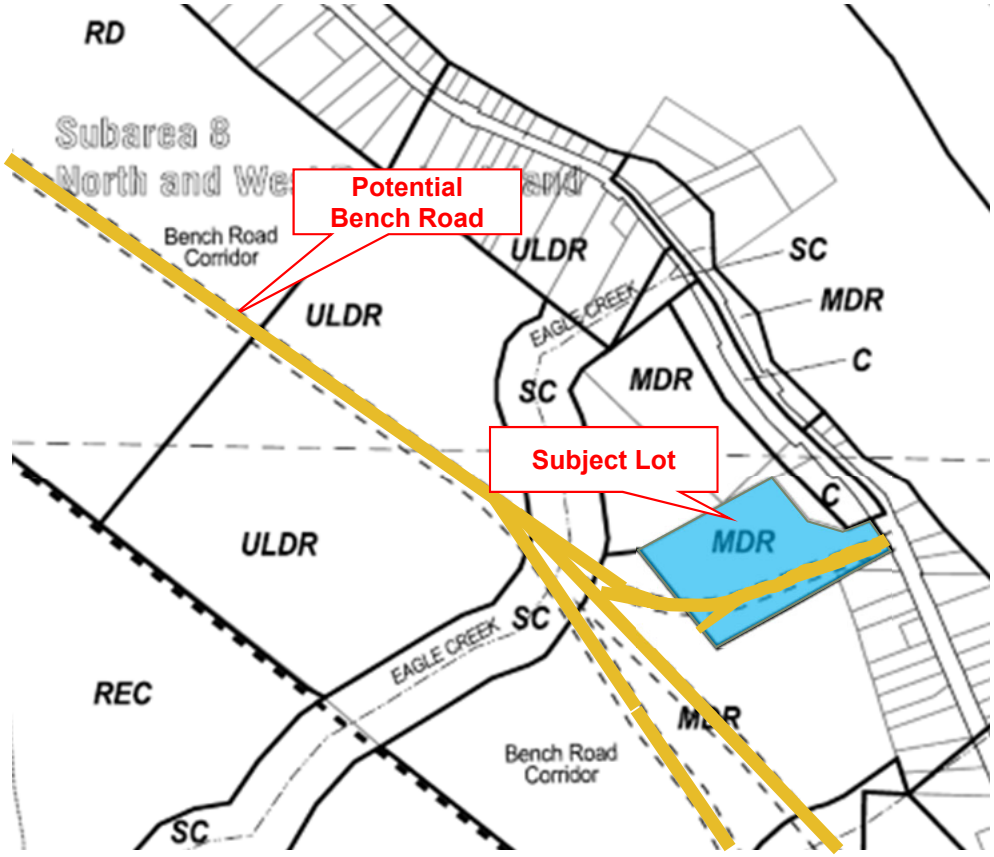

Proposed Rezone

Proposed Rezone

FROM:

D-15 zoning

TO:

The **GC, commercial district**, is intended to accommodate most commercial uses. Commercial activities are permitted outright in the zone except for those few uses that are listed as conditional uses to ensure compatibility. Residential development is allowed in mixed- and single-use developments in the general commercial district. GC zoned lands are located in the urban service boundary and are served or can be served by public water and sewer.

Residential development is allowed in GC zoning and can have a density of up to 50 units per acre.

CITY AND BOROUGH OF JUNEAU
ALASKA'S CAPITAL CITY

Staff Zoning Recommendation

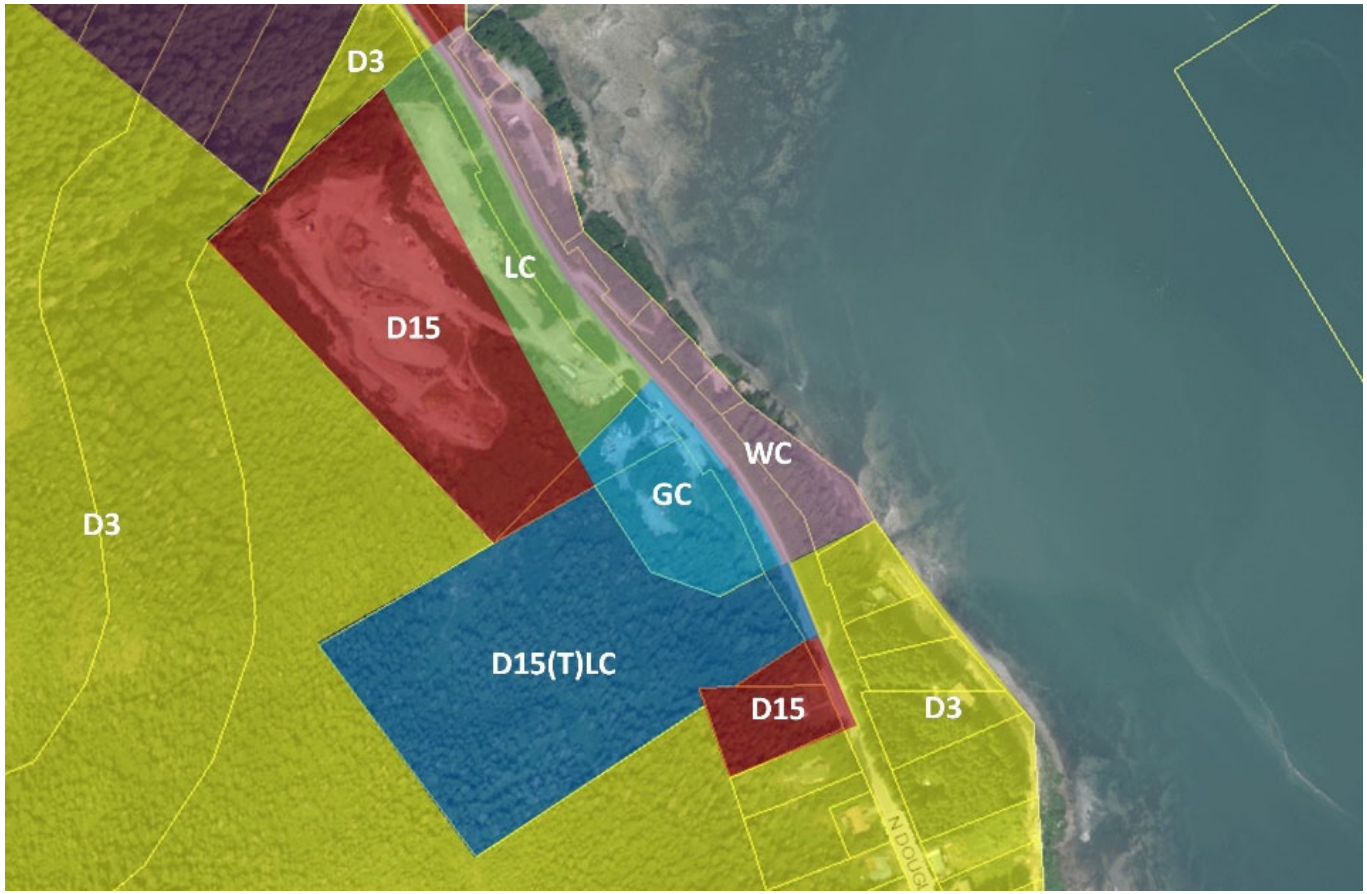

Staff Zoning Recommendation

FROM:

D-15 zoning

TO:

The **D15(T)LC, light commercial district**, is intended to accommodate commercial development that is less intensive than that permitted in the general commercial district. Light commercial districts are primarily located adjacent to existing residential areas. Although many of the uses allowed in this district are also allowed in the GC, general commercial district, they are listed as conditional uses in this district and therefore require commission review to determine compatibility with surrounding land uses. A lower level of intensity of development is also achieved by stringent height and setback restrictions. Residential development is allowed in mixed- and single-use developments in the light commercial district.

Residential development is allowed in LC zoning and can have a density of up to 30 units per acre.

CITY AND BOROUGH OF JUNEAU
ALASKA'S CAPITAL CITY

Rezone Request

Table of Dimensional Standards Existing site 15.41 acres	Current Zoning D-15 (15 du/acre)	Proposed Zoning GC (50 du/acre)	Proposed Zoning D15(T)LC (30 du/acre after transition)
Maximum Number of Units	231 units	771 units	462 units
Maximum Height Limit	35 feet	55 feet	45 feet
Maximum Lot Coverage	50%	None	None
Vegetative Cover	30%	10%	15%
Minimum Lot Size	5,000 sq. ft.	2,000 sq. ft.	2,000 sq. ft.
Minimum Lot Width	50 feet	20 feet	20 feet
Minimum Lot Depth	80 feet	60 feet	80 feet
Minimum Front Yard Setback	20 feet	10 feet	25 feet
Minimum Street Side Yard Setback	13 feet	17 feet	10 feet
Minimum Side Yard Setback	5 feet	10 feet	10 feet
Minimum Rear Yard Setback	15 feet	10 feet	10 feet

CITY AND BOROUGH OF JUNEAU
ALASKA'S CAPITAL CITY

Rezone Request

CUP: Conditional Use Permit, Review by Planning Commission

DEPT: Review by CDD with Building Permit

	Current Zoning	Proposed Zoning	Proposed Zoning
	D-15	GC	D15(T)LC
Single-family residential, detached	DEPT	DEPT	DEPT
Multifamily	DEPT/CUP	DEPT/CUP	DEPT/CUP
Bed & Breakfasts, Rooming Houses	CUP	DEPT/CUP	DEPT/CUP
Hotels, Motels	Not allowed	DEPT/CUP	DEPT/CUP
Marijuana retail or cultivation	Not allowed	CUP	CUP
Offices less than 1,000 sq. ft.	CUP	DEPT	DEPT
Rock Crushing	Not allowed	Not allowed	Not allowed
Elementary and secondary schools	CUP	CUP	CUP
Tennis, racquetball, squash courts, skating rinks, exercise facilities, swimming pools, archery ranges	CUP	DEPT/CUP	DEPT/CUP
Sand and gravel operations	Not allowed	CUP	CUP
Mining Operations	CUP	Not allowed	Not allowed

CITY AND BOROUGH OF JUNEAU
ALASKA'S CAPITAL CITY

Public Comments

Concerns raised by the public include:

- Potential for increased vehicle traffic
- Frontage on a low-visibility curve
- Encourage an easement for a bench road
- Prohibit uses that cause large vehicle traffic

CITY AND BOROUGH OF JUNEAU
ALASKA'S CAPITAL CITY

Agency Comments

- CBJ Engineering & Public Works, CBJ Assessor's Office & Capital City Fire and Rescue – No concerns
- AKDOT&PF– Concerns about the ability of North Douglas Highway and the bridge to handle additional traffic. Concerns about high density developments without any sidewalks. A traffic impact analysis may be required.

CITY AND BOROUGH OF JUNEAU
ALASKA'S CAPITAL CITY

Zone Change Options & Alternatives

CBJ 49.75.130(a),

The Commission may recommend Assembly approval, approval with modifications or denial of a rezone request.

Options

- Recommend approval
- Deny rezone request
- Recommend different zoning districts than what is requested by the applicant or recommended by staff
- May determine the boundary of the area to be rezoned
  - This means that if the Commission wishes to do so, the zone district boundary line may be moved from its current location, as long as it is found to be in substantial conformance with the Comprehensive Plan

CITY AND BOROUGH OF JUNEAU
ALASKA'S CAPITAL CITY

Findings

After review of the application materials, the CBJ Land Use Code, and the CBJ 2013 Comprehensive Plan, the Director makes the following findings:

1. The request meets the submittal requirements and the rezoning initiation, zone change restrictions, and procedural requirements of the CBJ Land Use Code. The application was filed in January, is an expansion of an existing zoning district, is more than 2 acres, and is not similar to a request rejected in the past year.

2. Based on the preceding analysis, the proposal *does not* substantially conform to the Land Use Maps and policies of the Comprehensive Plan.

CITY AND BOROUGH OF JUNEAU
ALASKA'S CAPITAL CITY

Recommendation

Staff recommends the Planning Commission ADOPT the Director's analysis and findings and forward a recommendation of APPROVAL to the Assembly for a rezone from D15 to D15(T)LC.

The approval for completion of the transition zone is subject to the following conditions:

1. Prior to upgrading the zoning from D15 to LC, additional public infrastructure must be constructed.
2. Prior to upgrading the zoning from D15 to LC, a Comprehensive Land Use Designation Map amendment is required from MDR to HDR.

CITY AND BOROUGH OF JUNEAU
ALASKA'S CAPITAL CITY

Questions?

CITY AND BOROUGH OF
JUNEAU
ALASKA'S CAPITAL CITY

Planning Commission

(907) 586-0715
PC_Comments@juneau.org
www.juneau.org/plancomm
155 S. Seward Street • Juneau, AK 99801

PLANNING COMMISSION
NOTICE OF RECOMMENDATION

Date: May 19, 2021
Case No.: AME2021 0001

City and Borough of Juneau
City and Borough Assembly
155 South Seward Street
Juneau, AK 99801

Proposal:	Planning Commission Recommendation to the City and Borough Assembly regarding a request to rezone 15.41 acres of land from D15 to General Commercial, General Commercial/Light Commercial, or Light Commercial
Property Address:	North Douglas Highway
Legal Description:	Channel View Lot 1
Parcel Code Number:	6D0601150011
Hearing Date:	May 11, 2021

The Planning Commission, at its regular public meeting, recommended that the City & Borough Assembly approve a modified request to rezone 15.41 acres of land from D15 to Light Commercial at Channel View Lot 1.

The applicant requested to rezone 15.41 acres of land from D15 to General Commercial. After review and analysis, staff determined that Light Commercial (LC) and General Commercial (GC) zoning districts do not substantially conform to the Comprehensive Plan and the Land Use Designation Maps. Staff recommended creation of a transition zone, D15(T)LC, contingent on improvements to transportation infrastructure.

The Commission determined that LC zoning district more substantially conforms to the Land Use Designation Maps than GC, and did not believe that a transition zone was required. The Commission also determined that the Comprehensive Plan Land Use Designation Maps were inaccurate and

recommended updating the Land Use Designation Maps from Medium Density Residential (MDR) to High Density Residential (HDR) for the 15.41 acres of the requested rezone.

The Commission adopted the following findings:

1. Was the rezone application filed timely in accordance with CBJ 49.75.110?

   Finding: Yes. The rezone application was filed in January 2021.

2. Was adequate public notice provided in accordance with CBJ 49.75.110?

   Finding: Yes. Adequate public notice was provided in accordance with CBJ 49.75.110.

3. Is this request for an area covering more than two acres or an expansion of an existing zoning district as required by CBJ 49.75.120?

   Finding: Yes. The proposed rezone meets the minimum area required by CBJ 49.75.120.

4. Has no similar request been made within the previous 12 months as required by CBJ 49.75.120?

   Finding: Yes. No similar rezone request has been filed within the previous 12 months for any of the rezone options.

5. Is the proposed zoning district and the uses allowed therein found to be in substantial conformance with the land use maps of the Comprehensive Plan and policies of the Comprehensive Plan, in accordance with CBJ 49.75.120?

   Finding: Yes. Rezoning 15.41 acres from D15 to Light Commercial zoning conforms with the policies and guidelines of the Comprehensive Plan and substantially conforms to the Land Use Designation Maps.

6. Is the proposed zoning district and the uses allowed therein found to be in substantial conformance with Title 49 – Land Use Code, in accordance with CBJ 49.75.120?

   Finding: Yes. The proposed rezone is in substantial conformance with Title 49 – Land Use Code.

Attachments: April 30, 2021 memorandum from Joseph Meyers, Community Development, to the CBJ Planning Commission regarding AME2021 0001.

This Notice of Recommendation constitutes a recommendation of the CBJ Planning Commission to the City and Borough Assembly. Decisions to recommend an action are not appealable, even if the recommendation is procedurally required as a prerequisite to some other decision, according to the provisions of CBJ 01.50.020 (b).

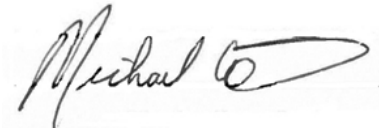

May 19, 2021

Michael LeVine, Chair
Planning Commission

Date

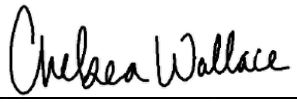

May 19, 2021

Filed With City Clerk

Date

cc: **Plan Review**

NOTE: The Americans with Disabilities Act (ADA) is a federal civil rights law that may affect this recommended text amendment. ADA regulations have access requirements above and beyond CBJ - adopted regulations. Contact an ADA - trained architect or other ADA trained personnel with questions about the ADA: Department of Justice (202) 272-5434, or fax (202) 272-5447, NW Disability Business Technical Center (800) 949-4232, or fax (360) 438-3208.

PLANNING COMMISSION AGENDA
THE CITY AND BOROUGH OF JUNEAU, ALASKA

VAR2021 0001: Variance to D18 lot depth from 80 to 78.2 feet for the purposes of a common wall subdivision - Continued public hearing from April 13, 2021 (Commission may reopen and take more public testimony) - APPROVED AS AMENDED

AGENDA ITEM:

Case No.: VAR2021 0001
Applicant: Natalia Golovatiuk
Location: Peters Lane
Proposal: Variance to D18 lot depth from 80 to 78.2 feet for the purposes of a common wall subdivision - Continued public hearing from April 13, 2021

ATTACHMENTS:

	Description	Upload Date	Type
	Staff Report for VAR2021 0001 from Aprl 13, 2021 Planning Commission Meeting	4/28/2021	Staff Report
	Legal Opinion: Subdivisions, variances, and nonconforming situations	5/3/2021	Miscellaneous
	Public Notice Announcement for VAR2021 0001, Revised	4/28/2021	Public Notice Announcement
	Presentation from April 13, 2021 Planning Commission Meeting	5/11/2021	Presentation
	Notice of Decision for VAR2021 0001	6/23/2021	Notice of Decision

CITY AND BOROUGH OF JUNEAU
ALASKA'S CAPITAL CITY
COMMUNITY DEVELOPMENT

BOARD OF ADJUSTMENT STAFF REPORT
VARIANCE VAR2021 0001
HEARING DATE: APRIL 13, 2021

(907) 586-0715
CDD_Admin@juneau.org
www.juneau.org/CDD
155 S. Seward Street • Juneau, AK 99801

DATE: March 30, 2021

TO: Michael LeVine, Chair, Board of Adjustment

BY: Beth McKibben, Senior Planner, AICP

THROUGH: Jill Maclean, Director, AICP

PROPOSAL: Applicant requests a Non-administrative Variance for minimum lot depth from 80 to 76.23 (proposed Lot 5A) and 79.45 (proposed Lot 5B) feet for the purposes of a common wall subdivision.

STAFF RECOMMENDATION: Denial

KEY CONSIDERATIONS FOR REVIEW:

- Variance would allow subdivision creating two lots with substandard depth. Lots would be considered compliant if variance is approved.
- Lot is vacant and can be developed with up to three units without a subdivision.
- Natural conditions of the lot do not create undue hardship.
- Similarly situated properties have the same constraints to subdivision and development.

GENERAL INFORMATION	
Property Owner	Natalia Golovatiuk
Applicant	Natalia Golovatiuk
Property Address	Peters Lane
Legal Description	Belleview Block I Lot 5
Parcel Number	1D050L140050
Zoning	D18
Lot Size	7,900 square feet
Water/Sewer	City water; sewer to be extended by developer
Access	Peters Lane
Existing Land Use	Vacant
Associated Applications	NCC2021 0017

ALTERNATIVE ACTIONS:

1. **Approve:** approve the permit and adopt new findings for items 1-2 below that support the approval. Approval may require conditions.
2. **Continue:** to a future meeting date if determined that additional information or analysis is needed to make a decision, or if additional testimony is warranted.

ASSEMBLY ACTION REQUIRED:

Assembly action is not required for this permit.

STANDARD OF REVIEW:

- Quasi-judicial decision
- Requires five (5) affirmative votes for approval
- Code Provisions:
  - 49.15.420
  - 49.20.230(b)
  - 49.20.240
  - 49.20.250(b)
  - 49.20.260
  - 49.25.400

The Commission shall hear and decide the case per *49.20.240.* *The board of adjustment shall hear all variance requests except administrative variances, and shall either approve, conditionally approve, modify or deny the request based on the criteria in section 49.20.250(b).*

SITE FEATURES AND ZONING

SURROUNDING ZONING AND LAND USES	
North D18)	Vacant/residential
South (D18)	Residential
East (D18)	Residential
West (D18)	Residential/vacant

SITE FEATURES	
Anadromous	No
Flood Zone	No
Hazard	No
Hillside	Yes
Wetlands	No
Parking District	No
Historic District	No
Overlay Districts	No

BACKGROUND INFORMATION

Project Description – The applicant requests a variance to reduce D18 minimum lot depth for the purposes of a common wall subdivision (**Attachment A**).

A variance changes the standards and regulations that apply to a lot. If the Board of Adjustment (board) grants this variance, the resulting lots will be considered compliant, despite the substandard lot depth.

In order to grant a variance, the board must determine that [CBJ 49.20.250(b)]:

> (A) Enforcement of the ordinance would create an undue hardship resulting from the unusual or special conditions of the property;
>
> (B) The unusual or special conditions of the property are not caused by the person seeking the variance;
>
> (C) The grant of the variance is not detrimental to public health, safety, or welfare; and
>
> (D) The grant of the variance is narrowly tailored to relieve the hardship.

The need for the variance must be based on a naturally-occurring peculiarity of the lot. A variance provides a "relief valve" for a land owner who would suffer undue hardship from literal application of zoning rules.

The table on page 3 summarizes relevant history for the lot and proposed development.

Background – The applicant submitted the building permits for a common wall development at which time it was realized that the average lot depth is less than the required 80-foot minimum. The nonconforming lot depth was overlooked in the pre-application.

History

The existing lot was platted in 1963 as part of the Belleview Subdivision, with Platting Resolution 150. The area was not zoned at the time, and no minimum lot area, lot width or lot depth requirements were required. The area was zoned D18 in 1987.

The table below summarizes relevant history for the lot and proposed development.

Item	Summary
PAC2020 0043	Pre-application Conference Report (PAC)
NCC2021 0017	A nonconforming certificate review for lot.
Platting Board minutes October 29, 1963	Approving platting resolution 150 for the Belleview Plat.
BLD20200723 & BLD2020724	Building permits to construct two units with the intent to subdivide as common wall; includes associated engineering required for the hillside endorsement.

ANALYSIS

Project Site – The site meets or exceeds the minimum lot area and lot width of the D18 zoning. Proposed lot 5A would have a lot depth of ~76.3 feet, and proposed lot 5B would have a lot depth of ~79.5 feet.

Standard (Common wall)	Requirement	Existing	Requested		Code Reference
			Lot 51A	***Lot 5B***	
Lot Size, square feet	2,500	7,9000	4,078	3,782	49.25.400
Lot Width, linear feet	20	~107	59.3	47.83	49.25.400
Lot Depth, linear feet	80	78.12	~76.3	~79.5	49.25.400

Platting

If the board grants the variance, the owner could subdivide the existing lot into two common wall lots with substandard lot depth. Resulting lots would be considered compliant for lot depth. A subdivision application has not been received nor reviewed; other applicable platting standards would apply. This variance approval is separate from a common wall subdivision approval.

Lot Dimensional Standards -

If the board grants this variance, the owner could subdivide the existing into two common wall lots with substandard lot depth. Lot 5A would have a depth of approximately 78.12 feet. Lot 5B would have a depth of approximately 79.5 feet.

To summarize the proposal [CBJ 49.15.420]:

	Required	Existing	Proposed Lot 5A	Proposed Lot 5B
Lot Depth	80	78.12*	76.3	79.5
Minimum lot area – common wall (square feet)	2,500	7,900	4,078	3,782

*Existing nonconforming lot (Attachment E)

"Lot depth" means the average distance measured from the front lot line to the rear lot line [CBJ 49.80]. Lot depth can be determined by adding the lot depth at one end to lot depth at the other, and dividing by two. Using this method, the lot's current nonconforming depth is 78.12 linear feet.

Subdivided lots resulting from approval of this variance would have less-than-required lot depth, and would be considered compliant with a new lot depth specialized for this situation. They would not qualify for setback reductions for substandard lots.

The proposed common wall development would meet or exceed other dimensional standards.

Alternatives Reviewed – A number of other alternatives to the variance process were evaluated for this site.

Permissible Development Options

D18 zoning requires a minimum of 2,420 square feet per dwelling unit. With a lot area of 7,900 square feet, the lot has a density of up to three units. The two-unit structure, as designed, may be used as a duplex. Additionally, the project could use a condominium ownership structure, allowing each unit to be owned individually, with the land owned in common with a Homeowners' Association.

The lot may support up to three units, attached or detached, if dimensional standards are met; or one single-family dwelling, or a single-family dwelling with an accessory apartment.

Non-permissible Development Options

CBJ 49.25.510(g) provides for a conditional use permit for a common wall or duplex development on a lot less than the required lot size. The applicant must demonstrate that the same number of units exist or may be lawfully created as a result of nonconforming development provisions. This lot exceeds the minimum lot area. This option is not available to the applicant.

CBJ 49.25.510(h) provides for a conditional use permit for a two-unit common wall structure on less than the required lot area. The lot must have been legally platted prior to 1987 and the subdivision designed specifically for two-unit common wall structures. No information is available to indicate that the subdivision was created specifically for two-unit common wall development, and the lot exceeds the minimum lot size. This option is not available to the applicant.

CBJ 49.70 Article XII, Alternative Residential Subdivision was evaluated. However, this process would result in the creation of three new lots: the parent lot and two unit lots. This would be an aggravation of the nonconforming situation.

VARIANCE STANDARDS

Pursuant to CBJ 49.20.200, a non-administrative variance may be granted to provide an applicant relief from the requirements of this Title 49, the Land Use Code. A variance cannot vary requirements or regulations of Title 49 concerning the use of land or structures, housing density, lot area, requirements in chapter 49.35 (Public and Private Improvements), or requirements in chapter 49.65 (Specified Use Provisions).

Per CBJ 49.20.250(b), a non-administrative variance may be granted to provide an applicant relief from requirements of this title after the prescribed hearing and after the board has determined that:

A. Enforcement of the ordinance would create an undue hardship resulting from the unusual or special conditions of the property.

Analysis: The applicant must establish that adhering to the code creates hardship that is distinct from similarly situated properties. Hardship must be due to peculiarities of the land.

"Hardship" means that the land cannot be used as intended. Pecuniary difficulties cannot be considered hardship.

The lot was platted prior to zoning. It is located in a district intended for multi-family development. The lot is vacant and may be developed with up to three units without a subdivision. Reasonable use of the property is not prohibited.

There are no mapped anadromous streams and no mapped wetlands on the lot. The lot is not in a FEMA mapped flood zone. The lot is steeply sloped similarly to surrounding properties, and a hill side endorsement is required regardless of the proposed subdivision.

The ability to develop the property with up to three units on the land demonstrates the land does not have peculiarities that deny use.

Finding: This criterion **has not** been met.

B. The unusual or special conditions of the property are not caused by the person seeking the variance.

Analysis: No unusual conditions of the property exist, caused by the applicant or otherwise.

The owner's desire to subdivide the land creates the need for a variance. The need for a variance is not due to a natural condition of the land.

Finding: This criterion **has not** been met.

C. The grant of the variance is not detrimental to public health, safety, or welfare.

Analysis: The applicant is required to complete site engineering through the required hillside endorsement process, which is reviewed and approved by the Director, through the building permit process. This process is intended to protect the site, and the area both during and after construction.

Finding: This criterion **has** been met.

D. The grant of the variance is narrowly tailored to relieve the hardship.

Analysis: The variance cannot be considered narrowly tailored.

- There is no proven hardship to which to tailor the variance.
- The subdivision would self-create a hardship.

This variance request is based on the most restrictive lot depth required for the proposed subdivision.

Finding: This criterion **has not** been met.

Pursuant to CBJ 49.20.260, the board may attach to a non-administrative variance conditions regarding the location, character, and other features of the proposed structures or uses as it finds necessary to carry out the intent of this title and to protect the public interest.

Condition: None recommended.

AGENCY REVIEW

CDD conducted an agency review comment period between March 8, 2021 and March 16, 2021. Comments received are found in Attachment C and are summarized below.

Agency	Summary
CCFR	No fire code or fire department concerns from the project as proposed. Public concerns regarding emergency vehicle access is a longer term challenge. Emergency apparatus requires a minimum of a 20-foot wide drivable surface, which does not have to be paved (per fire standards).
CBJ Streets	No concerns with the variance request provided the developer installs driveways in accordance with CBJ standards. Peters Lane is signed for no parking but signage isn't obvious. Streets will improve this signage when weather allows. Concerns from neighbors were a result of a 100 year storm event and a non-permitted driveway with an undersized culvert. Properly sized driveways culverts will help prevent this from happening in the future.

PUBLIC COMMENTS

In accordance with 49.20.230(b) public notice was mailed to property owners within 500 feet of the lot, a public notice sign was posted on-site two weeks prior to the hearing, and ads were placed in the Juneau Empire. Public comments received at time of writing this staff report can be found in Attachment D and are summarized below.

Name	Summary
Frank & Nancy Baxter	Concern with drainage from an unnamed creek; narrow unpaved street, poorly drained, emergency vehicle access when vehicles are parked on the street, safety of proposed structure in the event of an earthquake; requirement for off-street parking; no sidewalks on the street and need for accommodations for handicapped people; and danger to pedestrians.
Julie Costello	Concern for consideration of the stability of hillside supporting existing condominiums uphill from proposed development; culverts, ditches, and roadway during and after construction. Road needs maintenance. Concern for ability of narrow roadway to support additional development.
Ann House	Questions about the building design; and how construction will be monitored; concerns about impacts of development because of damage incurred during storms in 2019. Expressed concurrence with the variance request, but would like to see improvement to the neighborhood.

FINDINGS

1. ***Is the application for the requested variance complete?***

   Analysis: No additional analysis required.

   Finding: Yes. The application for the required variance is complete.

2. ***Does the variance as requested meet the criteria of Section 49.20.250(b)(1), Non-Administrative Variances?***

   Analysis: As discussed above, the Applicant has not established that:
   - A peculiarity of the land causes hardship.
   - The land cannot be used as intended.
   - The lot is different than similarly-situated properties.
   - A natural condition creates hardship.

   Finding: No. The requested variance does not meet all of the criteria of Section 49.20.250(b)(1), Non-Administrative Variances.

RECOMMENDATION

Staff recommends that the Board of Adjustment adopt the Director's analysis and findings and DENY requested non-administrative variance.

STAFF REPORT ATTACHMENTS

Item	Description
Attachment A	Application Packet
Attachment B	Abutters Notice
Attachment C	Agency Comments
Attachment D	Public Comments
Attachment E	NOD NCC2021 0017
Attachment F	PAC2020-0043 report

CITY AND BOROUGH OF JUNEAU
ALASKA'S CAPITAL CITY
COMMUNITY DEVELOPMENT

DEVELOPMENT PERMIT APPLICATION

NOTE: Development Permit Application forms must accompany all other Community Development Department land use applications.

To be completed by Applicant

PROPERTY LOCATION

Physical Address
Peters Ln, Douglas AK

Legal Description(s) (Subdivision, Survey, Block, Tract, Lot)
BELLEVIEW BL I LT 5

Parcel Number(s)
1D050L140050

☐ This property located in the downtown historic district
☐ This property located in a mapped hazard area, if so, which _____

LANDOWNER/ LESSEE

Property Owner
NATALIA GOLOVATIUK

Contact Person
NATALIA GOLOVATIUK

Mailing Address
7602 LUMBIS AVE UNIT 4, ANCHORAGE AK 99518

Phone Number(s)
(907)500-4756

E-mail Address
ODESSA.CLUB@YAHOO.COM

LANDOWNER/ LESSEE CONSENT Required for Planning Permits, not needed on Building/ Engineering Permits

I am (we are) the owner(s)or lessee(s) of the property subject to this application and I (we) consent as follows:

A. This application for a land use or activity review for development on my (our) property is made with my complete understanding and permission.
B. I (we) grant permission for officials and employees of the City and Borough of Juneau to inspect my property as needed for purposes of this application.

X Natalia Golovatiuk
Landowner/Lessee Signature

06/24/2020
Date

X
Landowner/Lessee Signature

Date

NOTICE: The City and Borough of Juneau staff may need access to the subject property during regular business hours and will attempt to contact the landowner in addition to the formal consent given above. Further, members of the Planning Commission may visit the property before the scheduled public hearing date.

APPLICANT If the same as OWNER, write "SAME"

Applicant
SAME

Contact Person
SAME

Mailing Address
SAME

Phone Number(s)
(907)500-4756

E-mail Address
SAME

X Natalia Golovatiuk
Applicant's Signature

06/24/2020
Date of Application

----------DEPARTMENT USE ONLY BELOW THIS LINE----------

This form and all documents associated with it are public record once submitted.

INCOMPLETE APPLICATIONS WILL NOT BE ACCEPTED

For assistance filling out this form, contact the Permit Center at 586-0770.

Intake Initials	
BMc	
Case Number	Date Received
VAR2021 0001	2.26.2021

CITY AND BOROUGH OF JUNEAU
ALASKA'S CAPITAL CITY
COMMUNITY DEVELOPMENT

VARIANCE APPLICATION

See reverse side for more information regarding the permitting process and the materials required for a complete application.

NOTE: Must be accompanied by a DEVELOPMENT PERMIT APPLICATION form.
Not to be used for Administrative Variances

To be completed by Applicant

PROJECT SUMMARY
Subject Parcel's ID: 1D050L140050, D-18 zoned lot, area 7,900 sq ft, was determined not to meet a minimum lot depth to qualify for a common-wall subdivision of the subject lot into two parcels. An applicant is proposing a minor common-wall subdivision of the subject parcel to create two lots.

VARIANCE REQUESTED (list CBJ Code section you are requesting a variance to)
Variance is requested for the minimum lot depth requirement (80') stated in Table of Dimensional Standards 49.25.400

Previous Variance Applications? YES (NO) Date of Filing: 02/17/2021

Previous Case Number(s): _____ Building Permit related to this variance? (YES) NO

Was the Variance Granted? YES NO

UTILITIES AVAILABLE: **WATER** (Public) On Site **SEWER:** (Public) On Site → not available.

ALL REQUIRED MATERIALS ATTACHED

Complete application per CBJ 49.65.210

Narrative including:

Any characteristics of land or building(s) or extraordinary situations that are unusual to this property or structure

Why a variance would be needed for this property regardless of the owner

What hardship would result if the variance is not granted

Site Plan

----------DEPARTMENT USE ONLY BELOW THIS LINE----------

VARIANCE FEES	Fees	Check No.	Receipt	Date
Application Fees	$ 400			
Adjustment	$			
Total Fee	$ 400			

This form and all documents associated with it are public record once submitted.

INCOMPLETE APPLICATIONS WILL NOT BE ACCEPTED

For assistance filling out this form, contact the Permit Center at 586-0770.

Case Number	Date Received
VAR	2.26.2021

Variance Application Instructions

Variances are outlined in CBJ 49.20 article II

Application: An application for a Variance will not be accepted by the Community Development Department *(CDD) until it is* determined to be complete. The items needed for a complete application are:

1. **Forms:** Completed Variance Application and Development Permit Application forms.
2. **Fees:** The fee for a Variance Application is $400.00. If the application is in conjunction with a major development permit, the Variance fee will be reduced by 20 percent. Any development, work or use done without a permit issued will be subject to double fees. All fees are subject to change.
3. **Project Description:** A detailed letter or narrative describing the hardship that is the result of an unusual situation or physical feature affecting a specific parcel of land or structure. **Also include how the proposed project meets the variance criteria listed on the attached sheet.**
4. **Plans:** A site plan showing the following information:
   A. The location of existing and proposed structures (i.e. buildings, fences, signs, parking areas, etc.); and
   B. The location of existing physical features of the site (i.e. drainage, eagle trees, hazard areas, salmon streams, wetlands, etc.).

Document Format: All materials submitted as part of an application shall be submitted in either of the following formats:

1. Electronic copies in the following formats: .doc, .txt, .xls, .bmp, .pdf, .jpg, .gif, .xlm, .rtf (other formats may be preapproved by the Community Development Department).
2. Paper copies 11" X 17" or smaller (larger paper size may be preapproved by the Community Development Department).

Please consult with the Community Development Department to discuss whether additional information may be required for your application. The "Planner-On-Call" can be reached by contacting the Community Development Department at (907) 586-0715 or via email at Permits@juneau.org.

Application Review & Hearing Procedure: Once the application is determined to be complete, the Community Development Department will initiate the review and scheduling of the application. This process includes:

Review: As part of the review process the Community Development Department will evaluate the application for consistency with all applicable City & Borough of Juneau codes and adopted plans. Depending on unique characteristics of the Variance Application request the application may be required to be reviewed by other municipal boards and committees. During this review period, the Community Development Department will coordinate the review of this application by other agencies, as necessary. Review comments may require the applicant to provide additional information, clarification, or submit modifications/alterations for the proposed project.

Hearing: All Variance Applications must be reviewed by the Board of Adjustment. Once an application has been deemed complete and has been reviewed by all applicable parties the Community Development Department will schedule the requested permit for the next appropriate meeting.

Public Notice Responsibilities: As part of the Variance process, all requests must be given proper public notice as outlined in 49.20.230 which consists of the following:

Community Development Department will give notice of the pending Planning Commission meeting and its agenda in the local newspaper a minimum of 10-days prior to the meeting. Furthermore, the department will mail abutters notices to all property owners within 500-feet of the project site. A "Public Notice Sign" is required to be posted on the site by the Applicant and the Community Development Department will create the sign to be posted.

KATABATIC ENGINEERING

Gabriel Hayden, P.E.
hayden@katabaticeng.com
(503) 866-5579

Construction Drawings
Natalia Golovatiuk

Subdivision of
Lot 5 Block 1 Bellevue Sub
Peters Lane
Juneau, AK 99801

Vicinity Map

DRAWN: 8/23/20
SHEET # 1/15

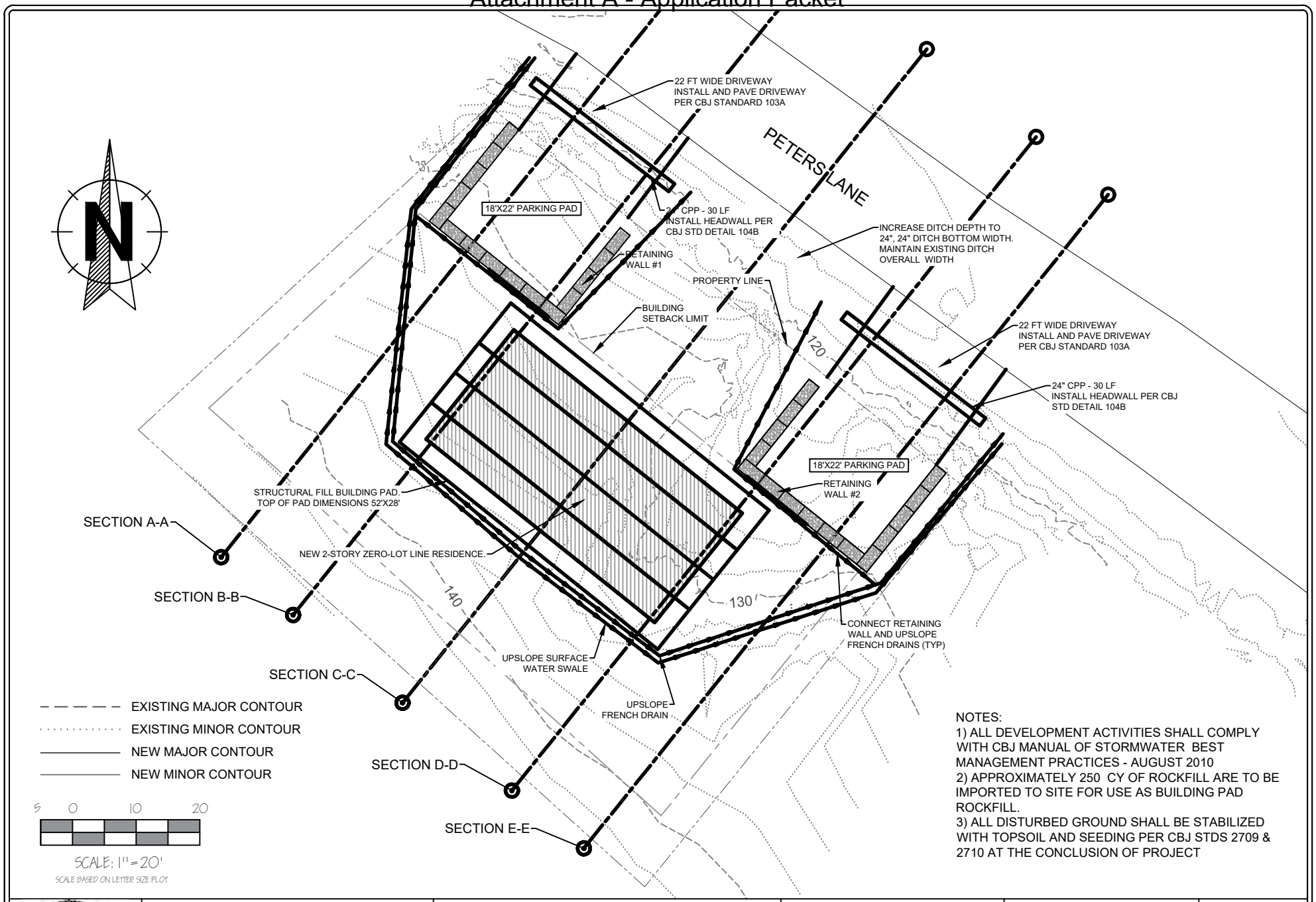

NOTES:
1) ALL DEVELOPMENT ACTIVITIES SHALL COMPLY WITH CBJ MANUAL OF STORMWATER BEST MANAGEMENT PRACTICES - AUGUST 2010
2) APPROXIMATELY 250 CY OF ROCKFILL ARE TO BE IMPORTED TO SITE FOR USE AS BUILDING PAD ROCKFILL.
3) ALL DISTURBED GROUND SHALL BE STABILIZED WITH TOPSOIL AND SEEDING PER CBJ STDS 2709 & 2710 AT THE CONCLUSION OF PROJECT

	KATABATIC ENGINEERING	Gabriel Hayden, P.E. hayden@katabaticeng.com (503) 866-5579	Construction Drawings Natalia Golovatiuk	Subdivision of Lot 5 Block 1 Bellevue Sub Peters Lane Juneau, AK 99801	Site Plan	DRAWN: 12/11/20 SHEET # 2/15

KATABATIC ENGINEERING
Gabriel Hayden, P.E.
hayden@katabaticeng.com
(503) 866-5579

Construction Drawings
Natalia Golovatiuk

Subdivision of
Lot 5 Block 1 Bellevue Sub
Peters Lane
Juneau, AK 99801

Original
Slope Grades

DRAWN:
8/23/20
SHEET #
3/15

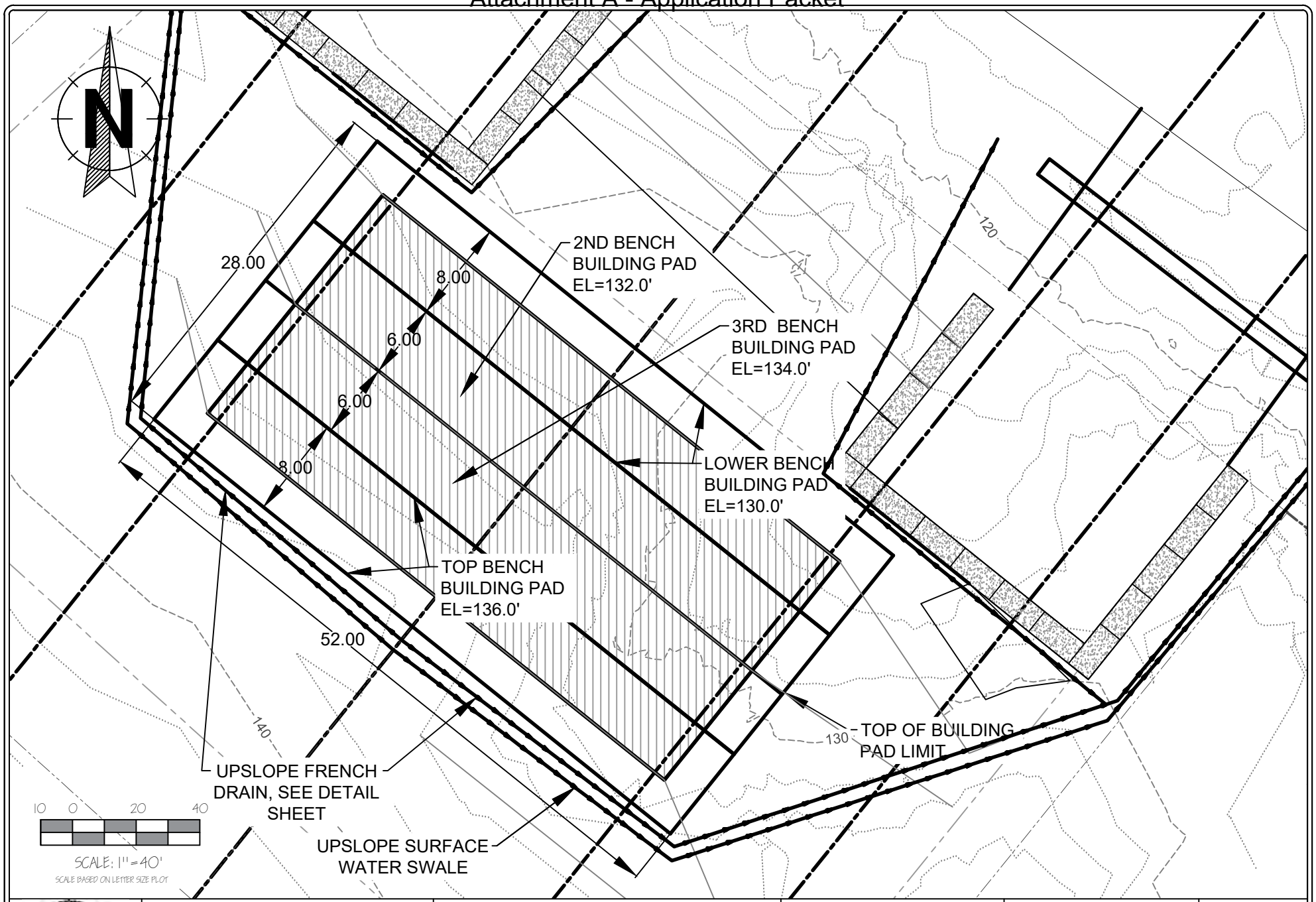

	KATABATIC ENGINEERING	Gabriel Hayden, P.E. hayden@katabaticeng.com (503) 866-5579	Construction Drawings Natalia Golovatiuk	Subdivision of Lot 5 Block 1 Bellevue Sub Peters Lane Juneau, AK 99801	Building Pad Plan	DRAWN: 12/11/20 SHEET # 4/15

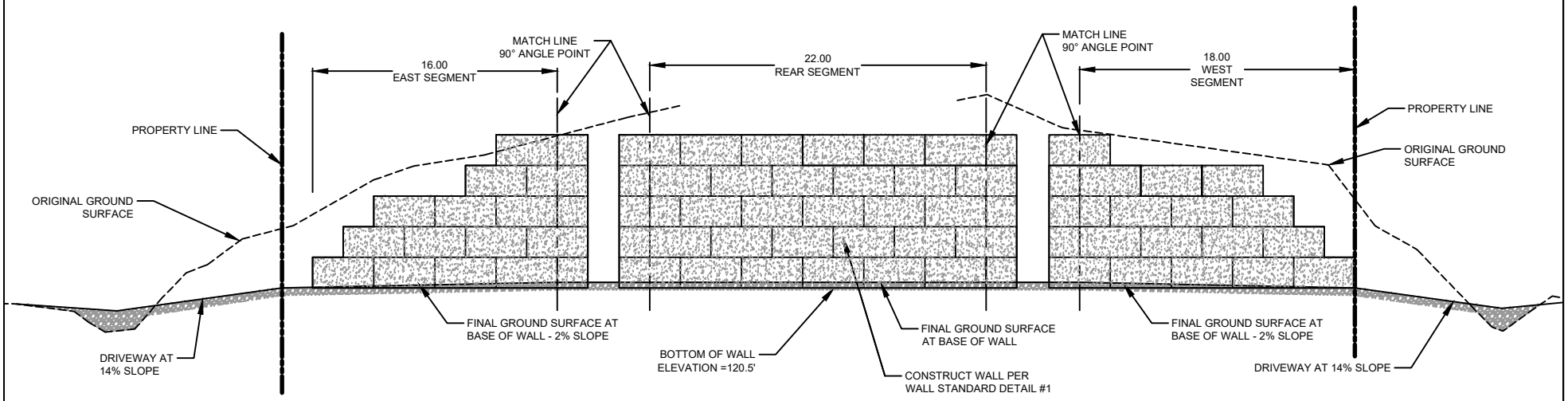

WALL #1 - ELEVATION VIEW

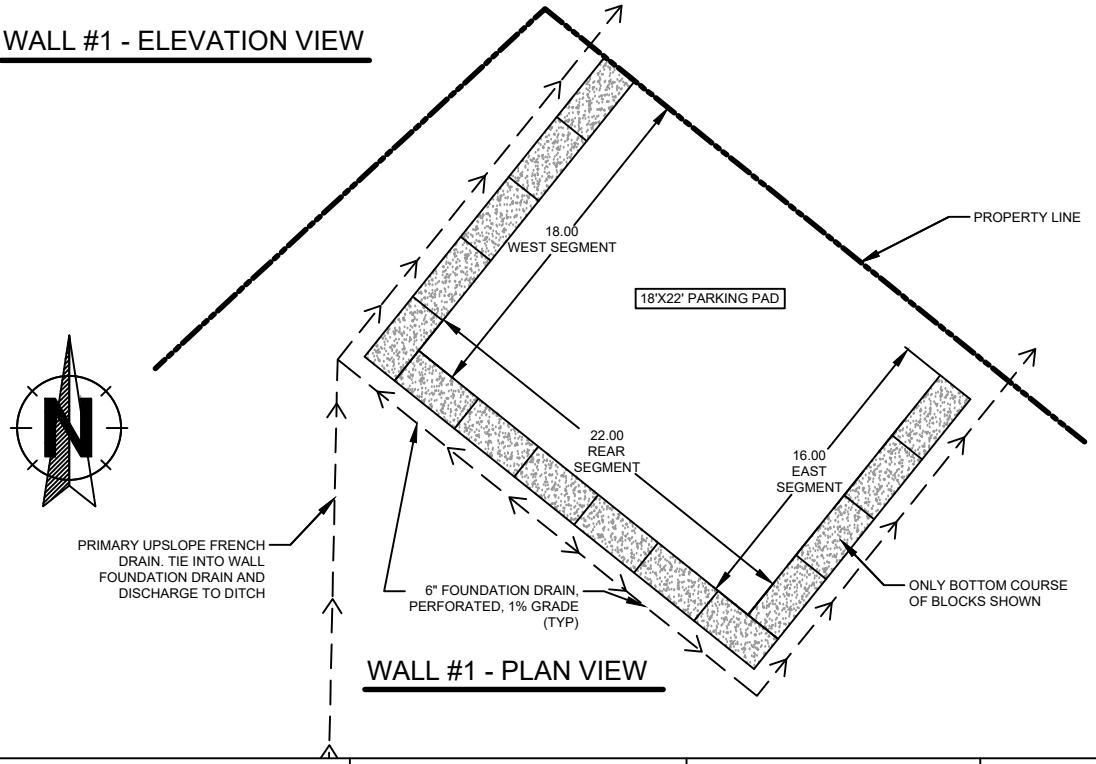

WALL #1 - PLAN VIEW

SCALE: 1"=10'

SCALE BASED ON LETTER SIZE PLOT

	KATABATIC ENGINEERING	Gabriel Hayden, P.E. hayden@katabaticeng.com (503) 866-5579	Construction Drawings Natalia Golovatiuk	Subdivision of Lot 5 Block 1 Bellevue Sub Peters Lane Juneau, AK 99801	Retaining Wall #1 Plan & Elevation	DRAWN: 12/11/20 SHEET # 5/15

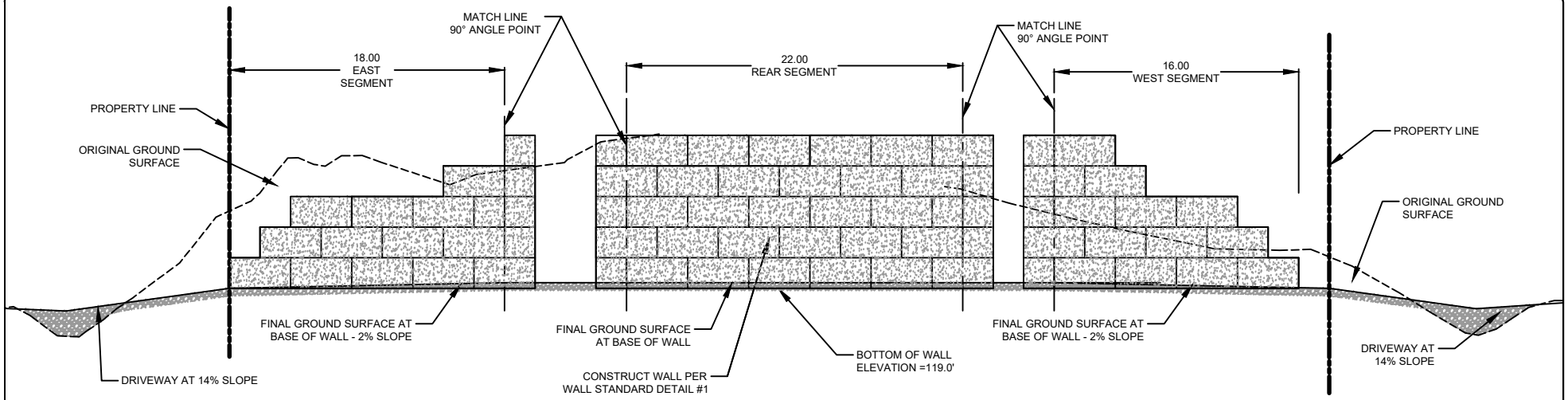

WALL #2 - ELEVATION VIEW

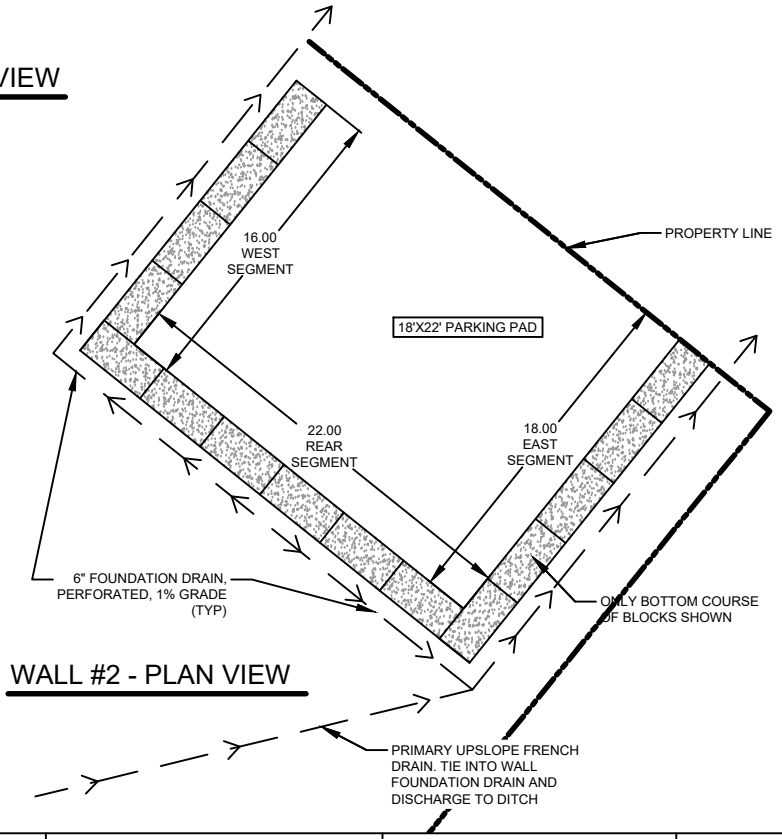

WALL #2 - PLAN VIEW

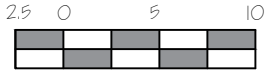

SCALE: 1"=10'

SCALE BASED ON LETTER SIZE PLOT

KATABATIC ENGINEERING
Gabriel Hayden, P.E.
hayden@katabaticeng.com
(503) 866-5579

Construction Drawings
Natalia Golovatiuk

Subdivision of
Lot 5 Block 1 Bellevue Sub
Peters Lane
Juneau, AK 99801

Retaining Wall #2
Plan & Elevation

DRAWN:
12/11/20
SHEET #
6/15

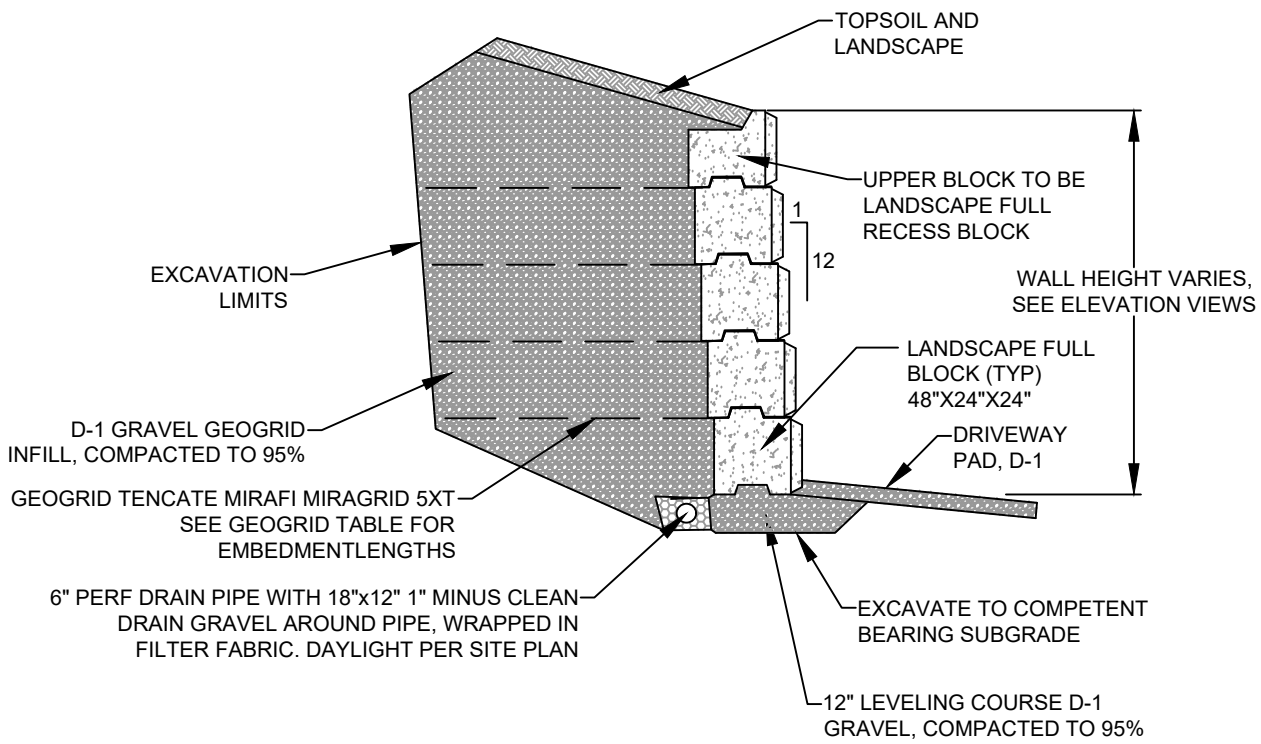

WALL STANDARD DETAIL

GEOGRID TABLE		
# OF BLOCKS HIGH	TOTAL GEOGRID LENGTH	GEOGRID EMBEDMENT LENGTH
5	8	6
4	7	5
3	6	4
2 OR LESS	NO GEOGRID	

NOTES:
1) INSTALL BLOCKS PER INSTALLATION GUIDELINES GIVEN IN 'WORLD BLOCK INSTALLATION AND ENGINERING MANUAL' DOCUMENT. AVAILABLE AT https://www.worldblock.com/world-block-installation-and-engineering-manual.html
2) PURCHASE OFFSET BLOCKS FOR EAST/WEST SEGMENTS SO AS TO ACCOMODATE FOR 2" STEPBACK PER COURSE

0 2.5 5

SCALE: 1"=5'
SCALE BASED ON LETTER SIZE PLOT

KATABATIC ENGINEERING
Gabriel Hayden, P.E.
hayden@katabaticeng.com
(503) 866-5579

Construction Drawings
Natalia Golovatiuk

Subdivision of
Lot 5 Block 1 Bellevue Sub
Peters Lane
Juneau, AK 99801

Retaining Wall Details

DRAWN: 8/23/20
SHEET # 7/15

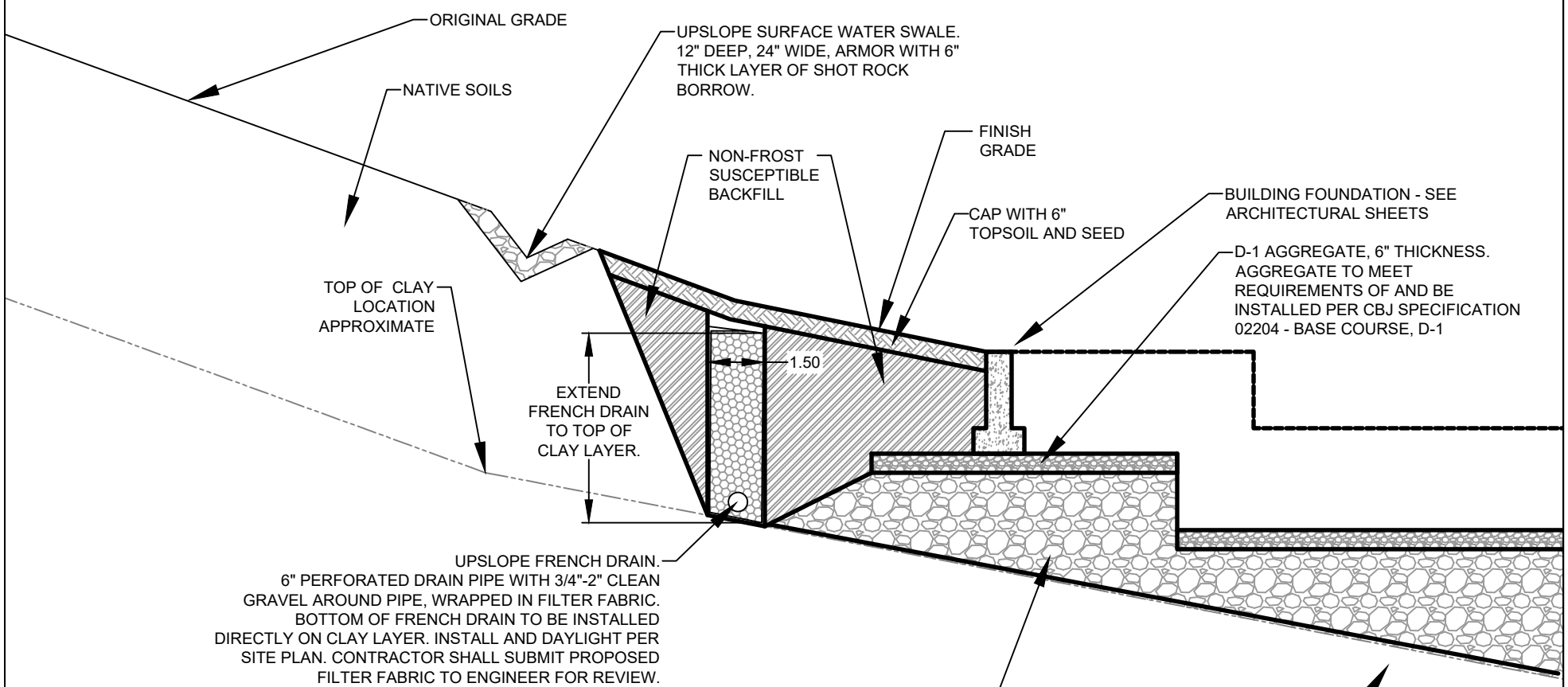

1 0 2 4

SCALE: 1" = 4'

SCALE BASED ON LETTER SIZE PLOT

	KATABATIC ENGINEERING	Gabriel Hayden, P.E. hayden@katabaticeng.com (503) 866-5579	Construction Drawings Natalia Golovatiuk	Subdivision of Lot 5 Block 1 Bellevue Sub Peters Lane Juneau, AK 99801	Foundation Pad Details	DRAWN: 8/23/20 SHEET # 8/15

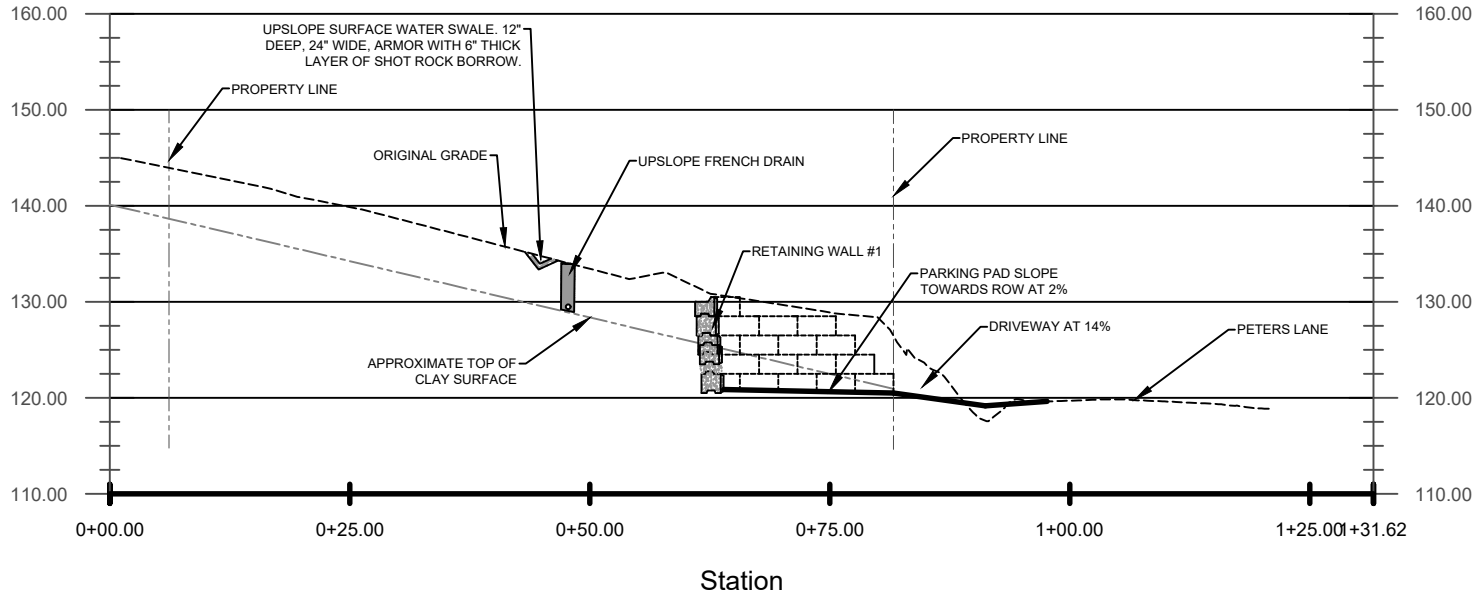

Section A- A

5 0 10 20

SCALE: 1" = 20'

SCALE BASED ON LETTER SIZE PLOT

	KATABATIC ENGINEERING	Gabriel Hayden, P.E. hayden@katabaticeng.com (503) 866-5579	Construction Drawings Natalia Golovatiuk	Subdivision of Lot 5 Block 1 Bellevue Sub Peters Lane Juneau, AK 99801	Section A-A	DRAWN: 12/11/20 SHEET # 9/15

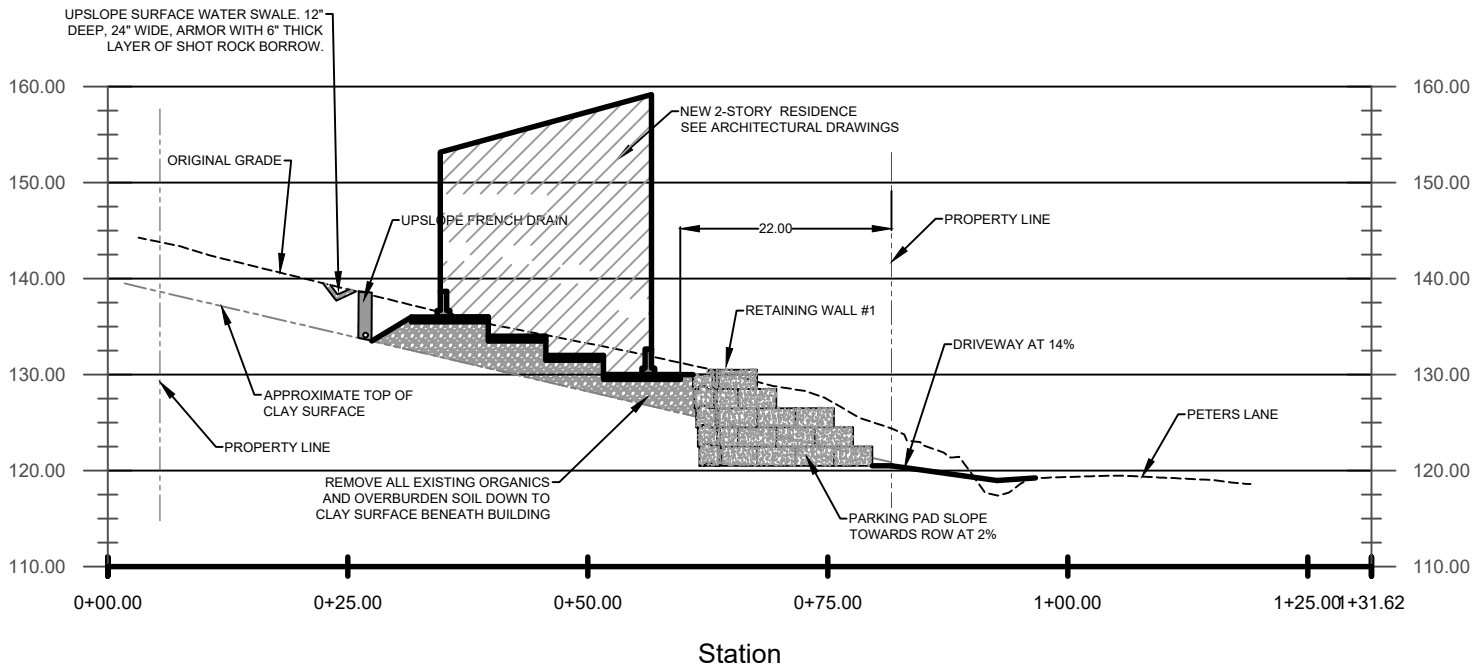

Section B-B

5 0 10 20

SCALE: 1" = 20'

SCALE BASED ON LETTER SIZE PLOT

	KATABATIC ENGINEERING	Gabriel Hayden, P.E. hayden@katabaticeng.com (503) 866-5579	Construction Drawings Natalia Golovatiuk	Subdivision of Lot 5 Block 1 Bellevue Sub Peters Lane Juneau, AK 99801	Section B-B	DRAWN: 12/11/20 SHEET # 10/15

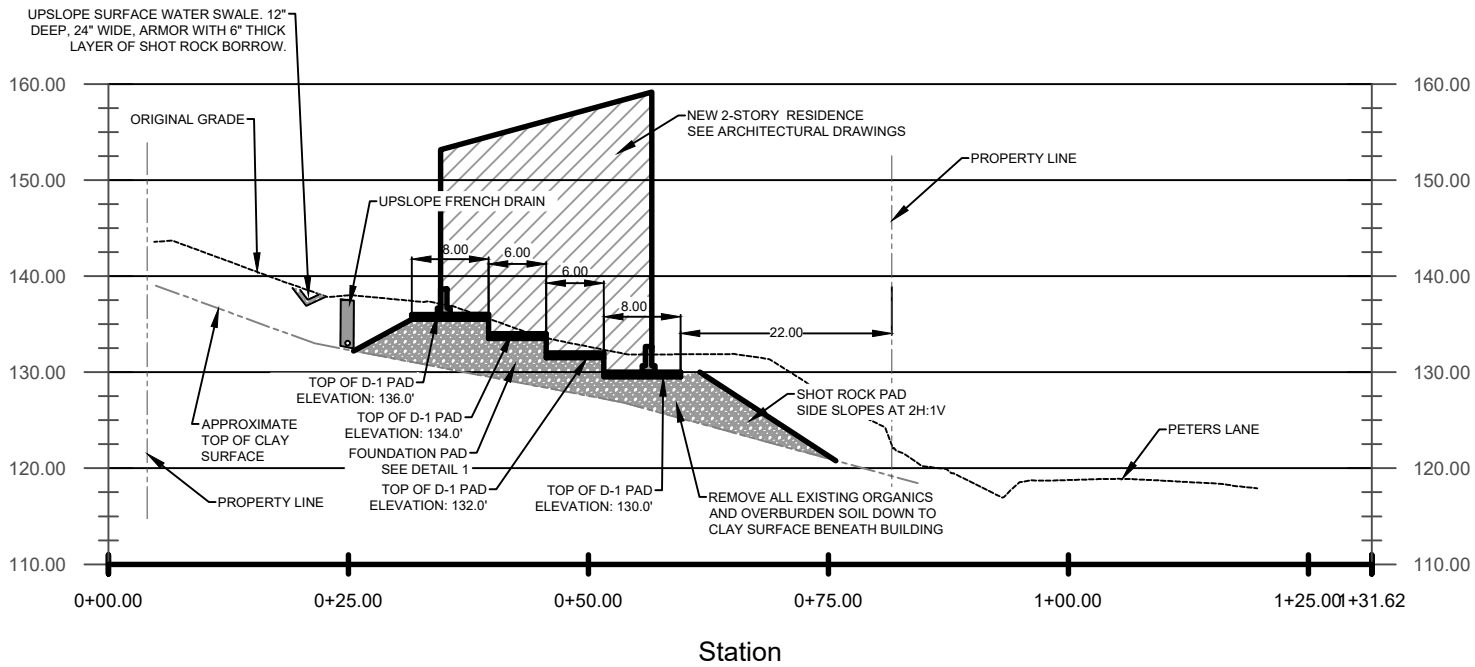

Section C-C

5 0 10 20

SCALE: 1" = 20'

SCALE BASED ON LETTER SIZE PLOT

	KATABATIC ENGINEERING	Gabriel Hayden, P.E. hayden@katabaticenq.com (503) 866-5579	Construction Drawings Natalia Golovatiuk	Subdivision of Lot 5 Block 1 Bellevue Sub Peters Lane Juneau, AK 99801	Section C-C	DRAWN: 12/11/20 SHEET # 11/15

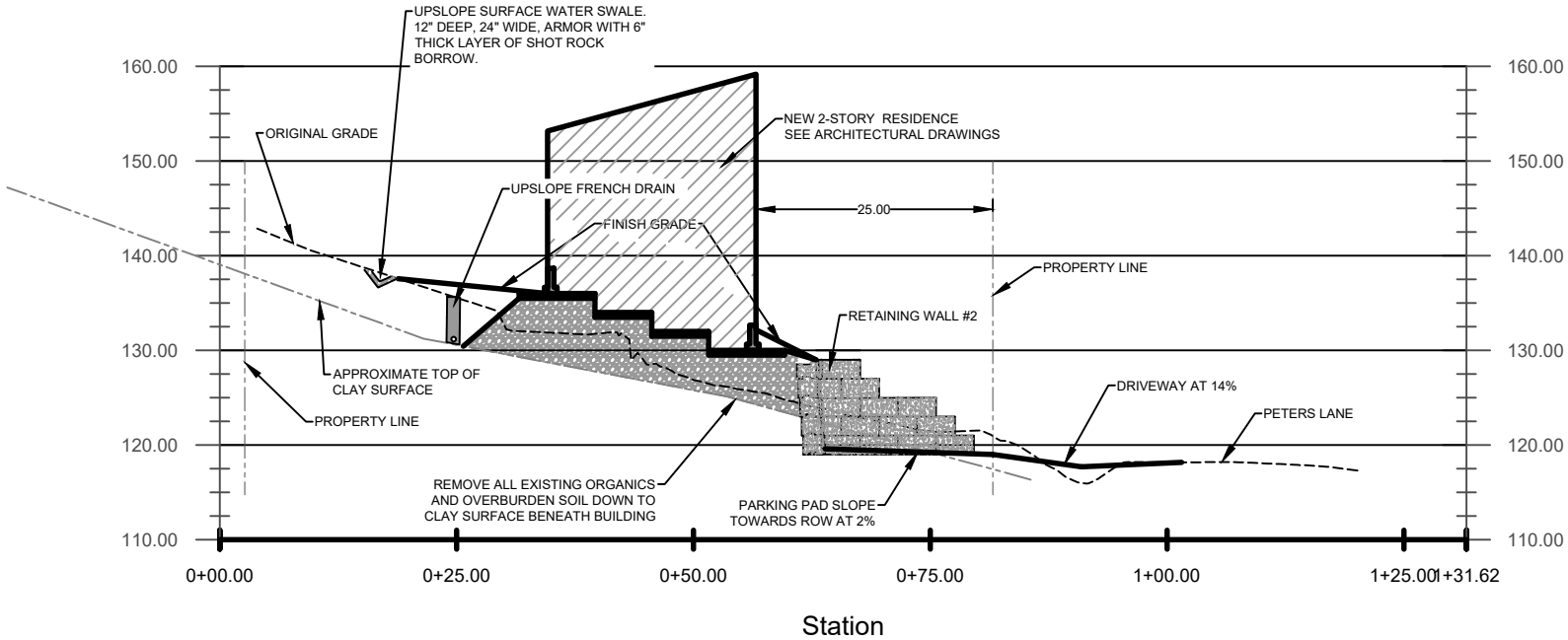

Section D-D

5 0 10 20

SCALE: 1" = 20'

SCALE BASED ON LETTER SIZE PLOT

	KATABATIC ENGINEERING	Gabriel Hayden, P.E. hayden@katabaticeng.com (503) 866-5579	Construction Drawings Natalia Golovatiuk	Subdivision of Lot 5 Block 1 Bellevue Sub Peters Lane Juneau, AK 99801	Section D-D	DRAWN: 12/11/20 SHEET # 12/15

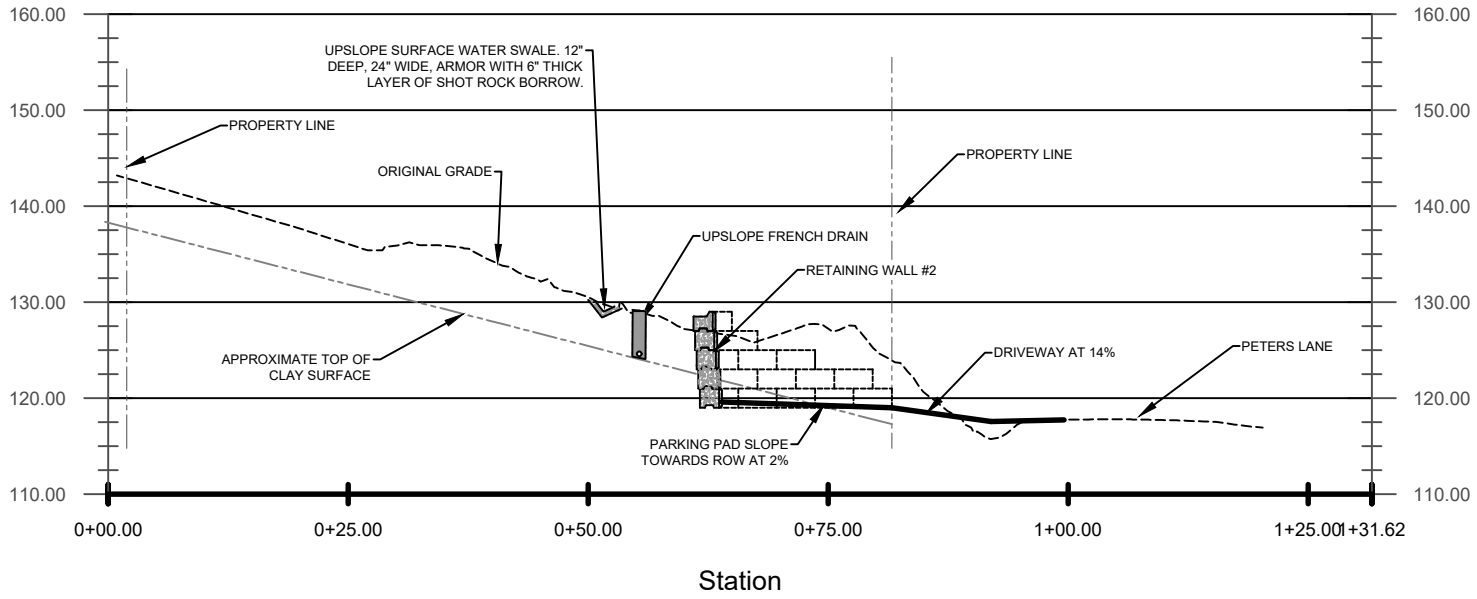

Section E- E

5 0 10 20

SCALE: 1" = 20'

SCALE BASED ON LETTER SIZE PLOT

KATABATIC ENGINEERING
Gabriel Hayden, P.E.
hayden@katabaticeng.com
(503) 866-5579

Construction Drawings
Natalia Golovatiuk

Subdivision of
Lot 5 Block 1 Bellevue Sub
Peters Lane
Juneau, AK 99801

Section E-E

DRAWN: 12/11/20
SHEET # 13/15

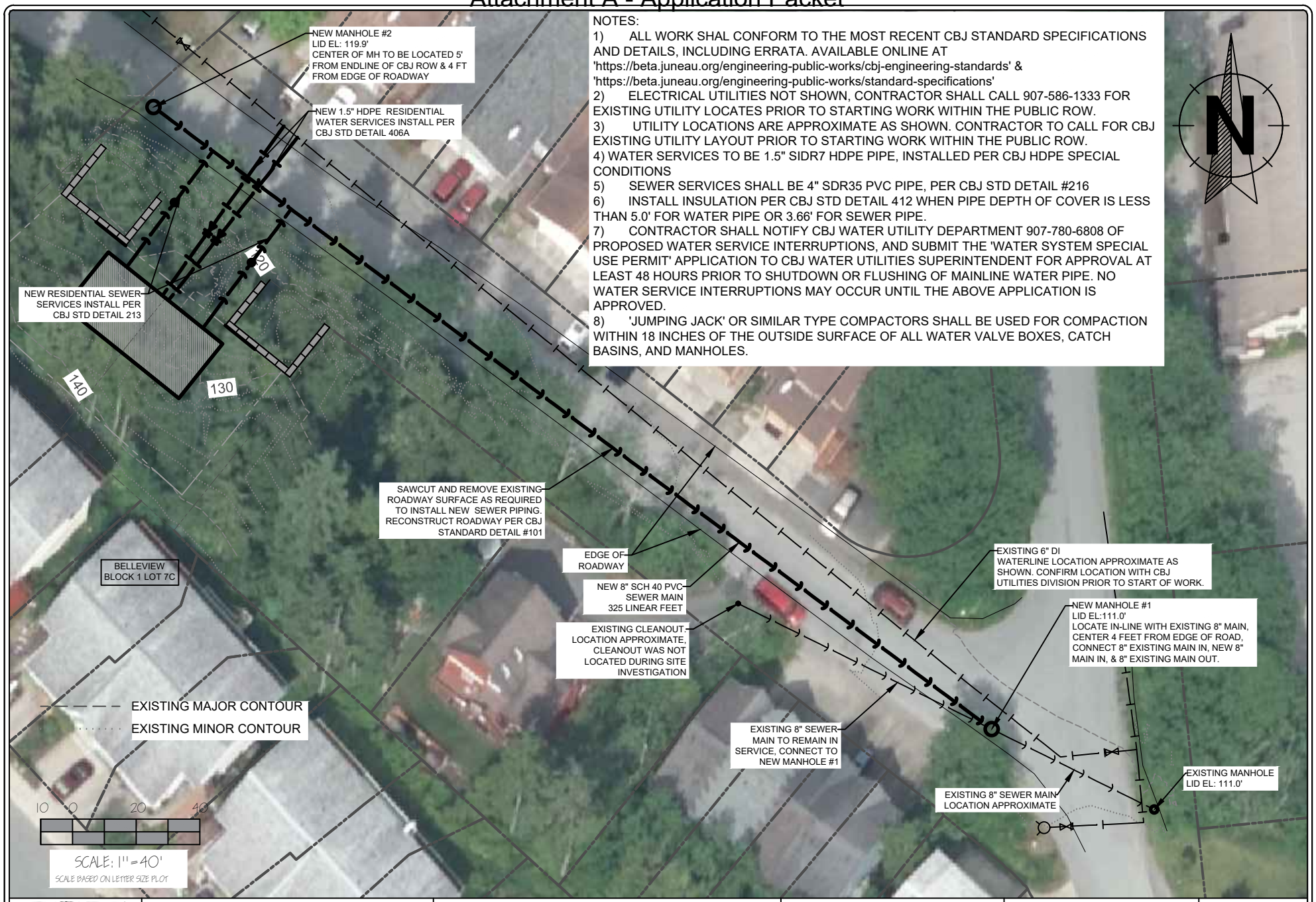

NOTES:

1) ALL WORK SHAL CONFORM TO THE MOST RECENT CBJ STANDARD SPECIFICATIONS AND DETAILS, INCLUDING ERRATA. AVAILABLE ONLINE AT 'https://beta.juneau.org/engineering-public-works/cbj-engineering-standards' & 'https://beta.juneau.org/engineering-public-works/standard-specifications'

2) ELECTRICAL UTILITIES NOT SHOWN, CONTRACTOR SHALL CALL 907-586-1333 FOR EXISTING UTILITY LOCATES PRIOR TO STARTING WORK WITHIN THE PUBLIC ROW.

3) UTILITY LOCATIONS ARE APPROXIMATE AS SHOWN. CONTRACTOR TO CALL FOR CBJ EXISTING UTILITY LAYOUT PRIOR TO STARTING WORK WITHIN THE PUBLIC ROW.

4) WATER SERVICES TO BE 1.5" SIDR7 HDPE PIPE, INSTALLED PER CBJ HDPE SPECIAL CONDITIONS

5) SEWER SERVICES SHALL BE 4" SDR35 PVC PIPE, PER CBJ STD DETAIL #216

6) INSTALL INSULATION PER CBJ STD DETAIL 412 WHEN PIPE DEPTH OF COVER IS LESS THAN 5.0' FOR WATER PIPE OR 3.66' FOR SEWER PIPE.

7) CONTRACTOR SHALL NOTIFY CBJ WATER UTILITY DEPARTMENT 907-780-6808 OF PROPOSED WATER SERVICE INTERRUPTIONS, AND SUBMIT THE 'WATER SYSTEM SPECIAL USE PERMIT' APPLICATION TO CBJ WATER UTILITIES SUPERINTENDENT FOR APPROVAL AT LEAST 48 HOURS PRIOR TO SHUTDOWN OR FLUSHING OF MAINLINE WATER PIPE. NO WATER SERVICE INTERRUPTIONS MAY OCCUR UNTIL THE ABOVE APPLICATION IS APPROVED.

8) 'JUMPING JACK' OR SIMILAR TYPE COMPACTORS SHALL BE USED FOR COMPACTION WITHIN 18 INCHES OF THE OUTSIDE SURFACE OF ALL WATER VALVE BOXES, CATCH BASINS, AND MANHOLES.

KATABATIC ENGINEERING
Gabriel Hayden, P.E.
hayden@katabaticeng.com
(503) 866-5579

Construction Drawings
Natalia Golovatiuk

Subdivision of
Lot 5 Block 1 Bellevue Sub
Peters Lane
Juneau, AK 99801

Utility Plan

DRAWN: 9/1/20
SHEET # 14/15

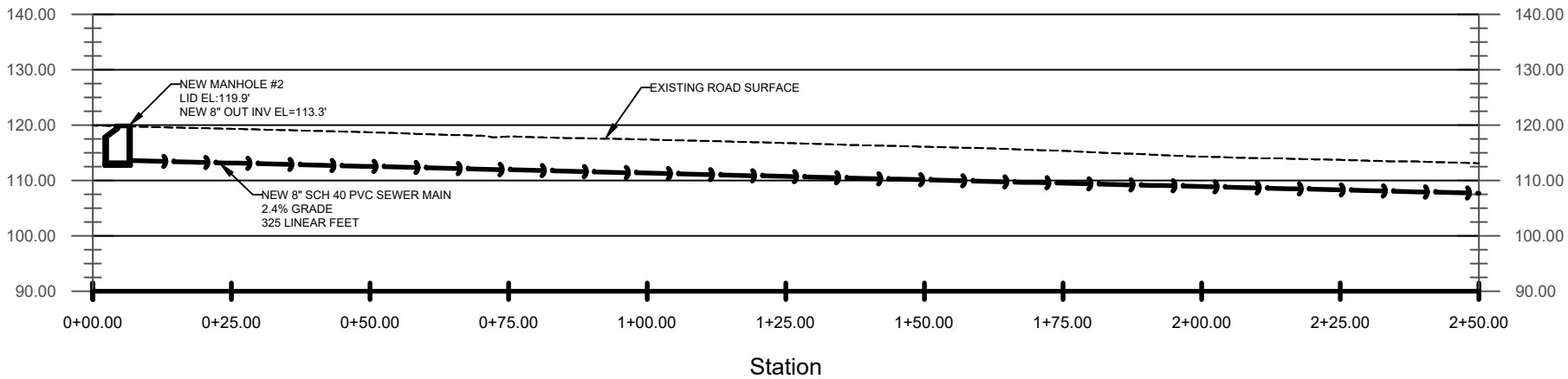

Section Sewer

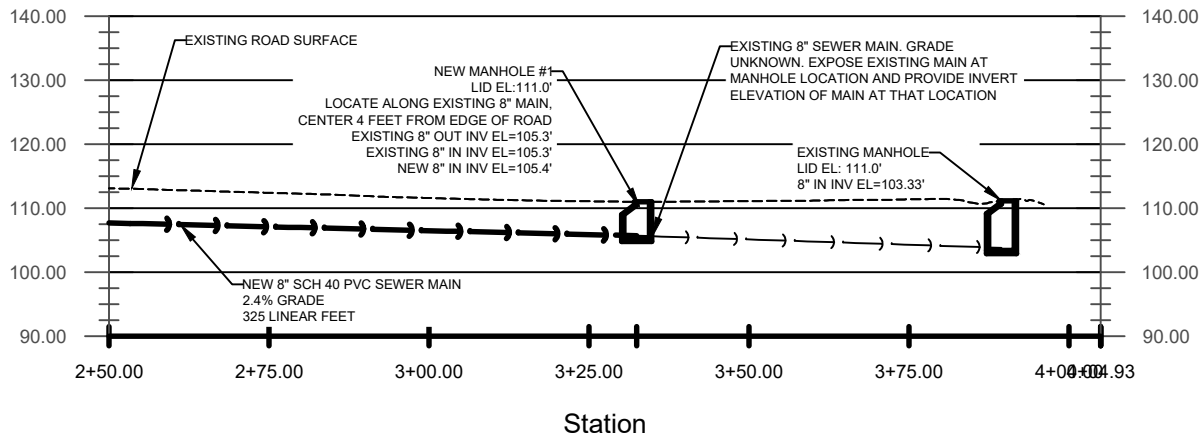

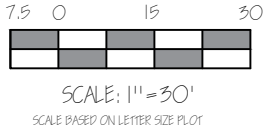

Section Sewer

	KATABATIC ENGINEERING	Gabriel Hayden, P.E. hayden@katabaticenq.com (503) 866-5579	Construction Drawings Natalia Golovatiuk	Subdivision of Lot 5 Block 1 Bellevue Sub Peters Lane Juneau, AK 99801	Sewer Profile	DRAWN: 9/1/20 SHEET # 15/15

#3. Narrative. Project Description:

A detailed letter or narrative describing the hardship that is the result of an unusual situation or physical feature affecting a specific parcel of land or structure. Also include how the proposed project meets the variance criteria listed on the attached sheet.

- Why the Variance is the most feasible option in order to develop the land.
- Why meeting the standard is not possible for the proposed use.

Subject parcel ID: 1D050L140050.

To allow for a minor common-wall subdivision of the subject parcel, the applicant is requesting variance for a minimum lot depth requirement, which per Table of Dimensional Standards 49.25.400, should be 80'.

The subject parcel's depth on south side, 81.31', meets the minimum lot depth requirement for the D-18 district common-wall subdivision.

Depth in the mid-area of the parcel is 77.58', whereas the parcel's depth on north side is 75'.

The subject lot area is 7,900 sq ft, while minimum lot area in the D-18 district is 2,500 sq ft.

(B) The unusual or special conditions of the property are not caused by the person seeking the variance.

The subject parcel features unusual and specials conditions which are explained below.

The parcel is categorized by an extremely high development cost due to:

1. <u>Absence of the sewer service to the lot.</u>

To construct a new residential dwelling on the lot, the owner/developer would be required to bring the sewer services to the lot. Per the CBJ Engineering, the sewer main installation costs will be responsibility of the developer.
A proposed engineered plan for extending a sewer main to the subject lot has been produced.
According to one of the lower bids by Howell Excavation LLC, the cost of sewer main installation to the lot, creates an additional cost to the developer of at least $60,000.

2. **<u>Hillside Endorsement is required for the subject lot.</u>**

Per Hillside Endorsement requirement to develop the subject parcel, an engineered site plan, grading plan and drainage plan will be required when a developer applies for a building permit.

The engineered site plan, drainage plan and grading plans have been produced by an Alaska-licensed engineer. Consistent with civil engineer-recommended specifications, pre-construction site preparation costs for the subject lot result in a much higher than what's considered traditional and normal site preparation costs in Juneau.
One bid only for a pre-construction site preparation work, by Arete Construction, resulted in a dollar figure that is twice as high as the parcel's tax assessed value.

A) Enforcement of the ordinance would create an undue hardship resulting from unusual or special conditions of the property.

The two factors stated above already create unusually high cost, which results in a hardship to the lot owner for developing the subject parcel.

It is important to note, during the last several years, the subject lot changed several owners, who all chose to rather sell the lot because they were confronted with the same challenges - high cost of bringing sewer services to the lot and high site preparation cost.

These were the reasons which precluded previous owners of the subject parcel from building on it.
An appraised value of a newly built dwelling would not justify the high cost of:

a. the site preparation work to comply with the Hillside Endorsement process.
b. high cost of installing sewer services to the lot.

According to a professional opinion of a Juneau realtor, a resale value of the proposed newly built duplex on the subject lot will be as follows:

I. A newly built single-owner duplex on a subject parcel without the subdivision, - $600,000.

Under this option, a cost of bringing utilities to the lot, site preparation work, architectural and engineering fees, construction cost combined with the cost of purchasing the parcel will result in a higher than $600,000 cost. This option is not a *financially viable option* for the developer because the appraised value of the single-owner duplex built on the subject lot ends up being lower than overall construction costs involved in this project.

II. Another option that was proposed by the CBJ Community Development was to create a two-unit condominium association without parcel's subdivision. The idea is to create two individual condo units, that could be sold individually and owned separately by independent owners.

This option does not create a noticeable increase in the appraised value of the duplex-to be built, if compared with the Option I. The condominium route, however, does create an additional expense to the developer with an estimated $20,000 of legal and attorney fees, as well as costs associated with managing the Condo Association.

Yet, an appraised market value for the two resulting condo units does not justify particularly high development and construction costs, as well as legal fees involved in creating a Condo Association.
This makes the creating a "condominium" option not *commercially viable* for the developer.

III. With a minor common-wall subdivision option of the subject D-18 parcel approved per Code 49.65.710, a newly built duplex will result in creation of two separate residential units.

Overall, development plus construction cost of the proposed new duplex building remain to be unusually high. However, an appraised value of the two resulting individual townhome units (each half of the duplex) is substantially higher under this option.
Per realtor's assessment, the resale value of each side of the duplex under this option, will be around $360,000 for each independent unit, making a combined project resale value around $720,000 for both units. This is the only finically viable option for the developer.

(C) The grant of the variance is no detrimental to public health, safety or welfare.

A proposed common-wall subdivision of the subject parcel does not create any detriment to public health, safety or welfare.

1. The subject lot is surrounded by common-wall townhome units situated on individual lots. Majority of housing units in the immediate neighborhood (Peters Ln and Simpson Ave), are townhome-style units created through a common-wall subdivision process in the D-18 district. For majority of these housing units tax assessed value is just under $300,000.

2. Approval of the requested variance to allow subdivision does not result in a higher density of units per acre.

3. A bordering parcel (***ID: 1D050L140062, 2961 Simpson Ave***) on west-side of the subject lot, features a common-wall townhome unit. It is noteworthy, three bordering lots to the west side of the subject parcel, became a product of subdivision of the bigger 7,532 sq ft. lot. A parent lot was subdivided into three parcels via a common-wall subdivision process for D-18 district, while each of newly created lots resulted in around 2,500 sq ft. area.
   Depth of parcel ***ID: 1D050L140062,*** on north side of the lot, is 72.59 feet, which is a few feet under a minimum lot depth required for the D-18 district, while this parcel's area is 2,527 sq. ft.

4. The subject lot area is 7,900 sq ft, while minimum lot area in the D-18 district is 2,500 sq ft.
   With grant of variance and approval of the proposed common-wall subdivision for the subject lot, area of each of the two resulting lots, will be approximately 3,950 sq ft.
   This area of each newly created lot is still about 58% higher if compared to a minimum lot area of 2,500 sq ft in the D-18 district.

5. A proposed common-wall subdivision of the subject parcel into two separate lots will be a more suitable fit for this particular D-18-zoned neighborhood and for its existing housing pattern.
   If each resulting duplex-half together with a land parcel under this half was owned separately, this would create a higher assessed property value for the owner, as well as for the City.
   Put differently, CBJ property tax will be assessed based on an overall higher value of each individual unit, creating a benefit for the City.

   In contrary, a single owner duplex within a D-18 neighborhood, with its' $600,000 price range, situated on a 7,900 sq ft will be more of an outcast in this neighborhood.

(D) The grant of the variance is narrowly tailored to relieve the hardship.

Project Background: Subject parcel ID: 1D050L140050.

A pre-application conference for the subdivision of the subject parcel was conducted on 07/08/2020.
During the pre-application conference, the developer was led to believe, the common-wall subdivision was a viable option for the subject D-18 lot. Pre-application conference notes, PAC20200043, served as reassurance to the developer that the subject lot was meeting criteria for minor common-wall subdivision of the subject parcel.

Relying on the information received during and after the pre-application conference, the lot owner proceeded with contracting an Alaska-licensed architect to produce architectural plans for a common-wall duplex building.

To comply with the CBJ recommendations which were provided following the Pre-Application Conference in the Notes PAC20200043, the developer also contracted with a civil engineer who produced an engineered design of the water/sewer connection to the parcel. A civil engineer also produced a site plan, grading plan, drainage report which were all required consistent with the pre-application conference notes.

The developer diligently took these necessary steps, while incurring significant costs in architectural and civil engineering fees ($19,000) to fulfill requirements for obtaining a building permit, as was recommended in the PAC20200043.
The developer was informed, the subject lot would be suitable for a construction of a single owner triplex on the parcel. Yet, the triplex option is not financially feasible for the developer, because it triggers a need for a new architectural and structural-engineered design, as well as it would require a revision of already created civil engineered site plan, grading plan and drainage plan for the lot.

NOTES:

1) THE ERROR OF CLOSURE OF THIS SURVEY DOES NOT EXCEED 1:10000.

2) ALL DISTANCES ARE MEASURED IN U.S. SURVEY FEET.

3) RECORD INFORMATION DERIVED FROM THE OFFICIAL PLAT OF US SURVEY 472, DATED 12 March 1917; US SURVEY 1956, DATED 27 JANUARY, 1931; US MINERAL SURVEY 262 DATED 24 NOVEMBER 1896; BELLEVIEW SUBDIVISION PLAT 472 DATED OCTOBER 29 1963; LOT 6 BLOCK I BELLEVIEW SUBDIVISION PLAT 96-52 DATED 23 AUGUST 1996; LOT 7A, BLOCK I BELLEVUE SUBDIVISION PLAT 96-38 DATED 31 MAY 1996; TREADWELL TOWNHOUSE SUBDIVISION PLAT 81-79 DATED 6 NOVEMBER 1981; PLAT OF LOTS 7 & 8, BLOCK I BELLEVIEW SUBDIVISION PLAT 96-21 DATED 16 SEPTEMBER 1996: ON FILE WITH ALASKA DEPARTMENT OF NATURAL RESOURCES RECORDER'S OFFICE JUNEAU RECORDING DISTRICT.

4) WHERE DIFFERENT FORM MEASURED OR CALCULATED RECORD DIMENSIONS ARE SHOWN IN PARENTHESES.

5) DOMESTIC WATER & SANITARY SEWER PROVIDED BY THE CITY AND BOROUGH OF JUNEAU PUBLIC UTILITIES.

6) SUBJECT TO EASEMENTS AND RESTRICTIONS OF RECORD.

BASIS OF BEARING

THE BASIS OF BEARING FOR THIS PLAT IS THE RECORD BEARING OF S 51°15'30" E BETWEEN FOUND 2" J.W. BEAN ALUMINUM CAP ON 5/8" REBARS, DELINEATING THE NORTHERLY CORNERS OF LOT 5, DATE OF ESTABLISHMENT UNKOWN. NO RECORD OF SURVEY OR MONUMENT RECORDS LOCATED WITHIN THE JUNEAU RECORDING DISTRICT, ANCHORAGE, ALASKA.

OWNERSHIP CERTIFICATE

I HEREBY CERTIFY THAT I AM THE OWNER OF THE PROPERTY SHOWN AND DESCRIBED HERON AND THAT I HEREBY ADOPT THIS PLAT OF SUBDIVISION WITH OUR FREE CONSENT, AND DEDICATE ALL STREETS, ALLEYS, WALKS, PARKS, AND OTHER OPEN SPACES TO PUBLIC OR PRIVATE USE AS NOTED:

DATE: _____,2020

OWNER _____
NATALIA GOLOVATUIK

NOTARY ACKNOWLEDGEMENT

UNITED STATES OF AMERICA)
)SS
STATE OF ALASKA)

THIS IS TO CERTIFY THAT ON THIS____ DAY OF _____, 2020, BEFORE ME THE UNDERSIGNED, A NOTARY PUBLIC IN AND FOR THE STATE OF ALASKA, DULY COMMISSIONED AND SWORN, PERSONALLY APPEARED NATALIA GOLOVATUIK TO ME KNOWN TO BE THE PERSONS DESCRIBED IN AND WHO EXECUTED THE ABOVE AND FOREGOING INSTRUMENT, AND ACKNOWLEDGED TO ME THAT THEY SIGNED AND SEALED THE SAME FREELY AND VOLUNTARY FOR THE USES AND PURPOSES THEREIN MENTIONED.

WITNESS MY HAND AND OFFICIAL SEAL THE DAY AND YEAR IN THIS CERTIFICATE FIRST ABOVE WRITTEN.

_____
NOTARY PUBLIC FOR ALASKA MY COMMISSION EXPIRES:_____

CERTIFICATE OF PLAT APPROVAL

I HEREBY CERTIFY THAT THE PLAT HEREON HAS BEEN FOUND TO COMPLY WITH TITLE 49 OF THE CODE OF THE CITY AND BOROUGH OF JUNEAU AND IS APPROVED BY THE CITY AND BOROUGH OF JUNEAU, DEPARTMENT OF COMMUNITY DEVELOPMENT, FOR RECORDING IN THE OFFICE OF THE JUNEAU RECORDING DISTRICT, JUNEAU, ALASKA.

DATED _____,2020

_____
JILL MACLEAN, DIRECTOR, COMMUNITY DEVELOPMENT
CITY AND BOROUGH OF JUNEAU
DEPARTMENT OF COMMUNITY DEVELOPMENT

ATTEST:

_____
CLERK, CITY AND BOROUGH OF JUNEAU

SURVEYOR'S CERTIFICATE

I, JOSHUA IVANISZEK, IN MY CAPACITY AS A PROFESSIONAL LAND SURVEYOR REGISTERED IN THE STATE OF ALASKA, CERTIFY THAT THIS PLAT REPRESENTS THE SURVEY MADE BY ME OR UNDER MY DIRECT SUPERVISION, THAT THE ACCURACY OF THE SURVEY IS WITHIN THE LIMITS REQUIRED BY TITLE 49 OF THE CODE OF THE CITY AND BOROUGH OF JUNEAU, THAT ALL DIMENSIONAL AND RELATIVE BEARINGS ARE CORRECT, AND THAT MONUMENTS ARE SET IN PLACE AND NOTED UPON THIS PLAT AS PRESENTED.

DATED: _____,2020

STATE OF ALASKA
49TH
Joshua Frantz Ivaniszek
No.12314
REGISTERED PROFESSIONAL

Draft for review only

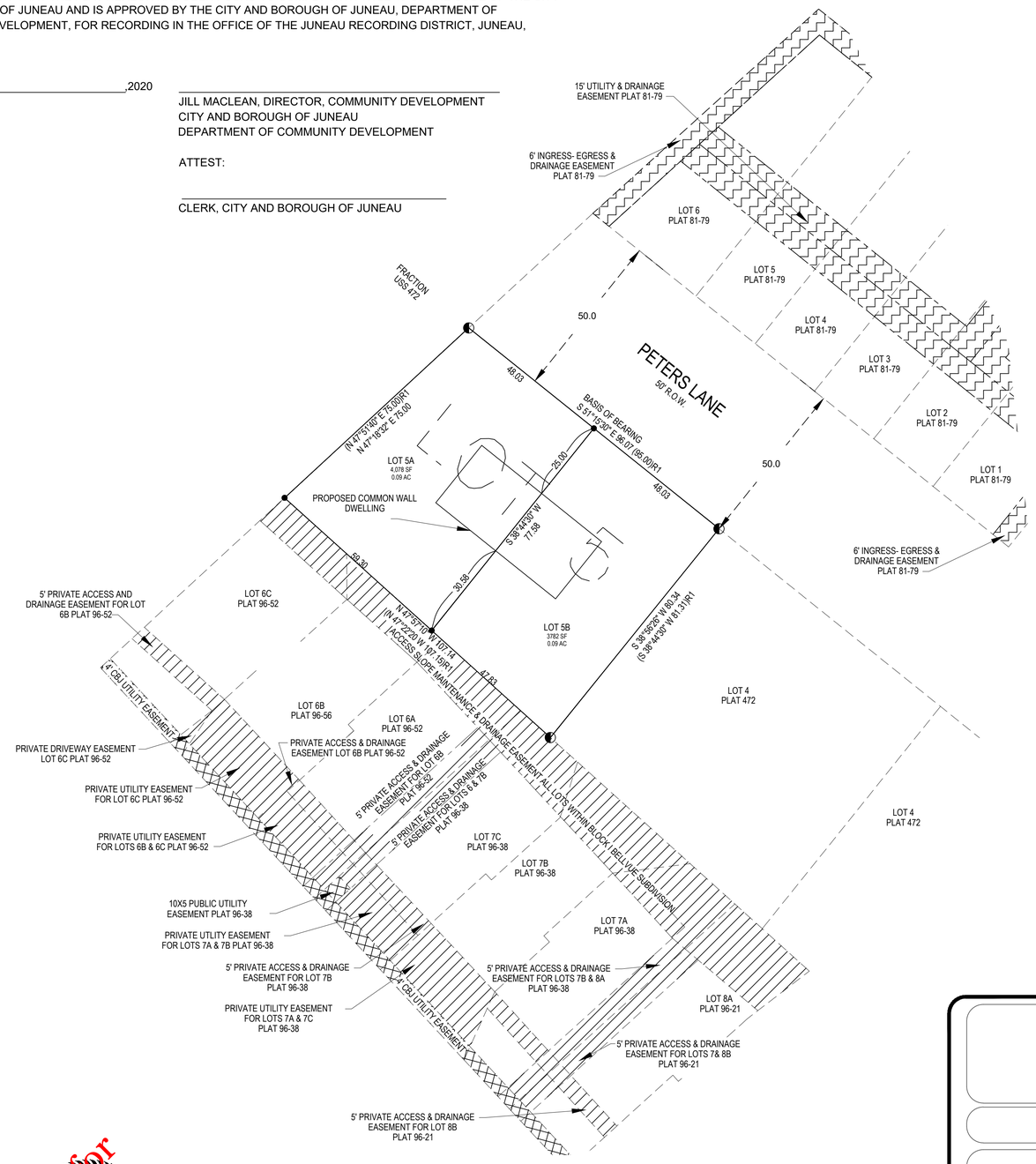

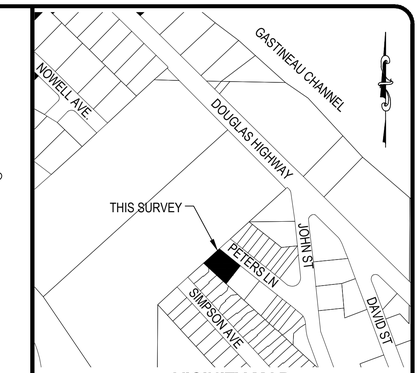

VICINITY MAP
SCALE N.T.S.
SOURCE CBJ BASEMAP

LEGEND:

- 3650-S SECONDARY MONUMENT RECOVERED
- 12314-S SECONDARY MONUMENT SET
- PROPERTY LINES
- UNSURVEYED LINES
- EXISTING PUBLIC UTILITY EASEMENTS
- EXISTING PRIVATE ACCESS & UTILITY EASEMENTS
- EXISTING EASEMENTS PLAT 81-79
- (N 45°11' W)R1 RECORD INFORMATION FROM PLAT 472
- (N45°04'15" W)R2 RECORD INFORMATION FROM PLAT No. 84-110

TYPICAL SET MONUMENT DETAIL

N.T.S.

IVANISZEK
12314S

36" 5/8" REBAR WITH RED PLASTIC CAP
STAMPED AS SHOWN

1"=20'

0 20 40 60 80

PLAT OF
LOT 5 A & LOT 5 B
A SUBDIVISION OF
LOT 5 BLOCK I BELLEVIEW SUBDIVISION
WITHIN THE CITY AND BOROUGH OF JUNEAU, ALASKA
JUNEAU RECORDING DISTRICT

STATE RECORDER'S OFFICE AT ANCHORAGE

CHILKAT SURVEYING & MAPPING, LLC
10654 PORTER LANE JUNEAU, ALASKA 99801
907-957-1908 LIC

OWNERS
NATALIA GOLOVATIUK
7602 LUMBIS AVE UNIT 4, ANCHORAGE, ALASKA 99518

SCALE:	DATE:	SHEET NO.
1" = 20'	30 SEPTEMBER 2020	1 OF 1

SPECIAL INSPECTION PROPOSAL FORM

Note: This form must be completed by the Owner or Architect/Engineer of Record and approved by the Building Official prior to issuance of a Building Permit. The qualified individual special inspector must be identified along with their firm.
Special Inspector may not be employed by the Contractor or anyone responsible for the construction work.

PROJECT Subdivision of Lot 5 Block 1 Bellevue Sub **PERMIT APPLICATION NO.:**

OWNER Natalia Golovatiuk **DATE:** 12/11/20

PROPOSED SPECIAL INSPECTOR Firm: Katabatic Engineering and Individual: Gabe Hayden
(Please fill out one of these forms for each Special Inspector on this project. Attach proposed inspector's qualifications.)

PROPOSED TESTING AGENCIES
(Specify which catagory they are testing.)

The use of a special inspector does not negate the need to call for and have all normal required CBJ inspections inspected and approved by CBJ Inspectors. Report requirements shall comply with the 2006 IBC Section 1704.1.2

TYPES OF INSPECTIONS REQUIRED:

Check each type of inspection required by Architect/Engineer of Record as indicated on the approved building plans and specifications.

☐ **1. CONCRETE**
Inspection Scope & Schedule*
Frequency of Sampling Materials
Frequency of Testing

☐ **2. BOLTS INSTALLED IN CONCRETE**
Inspection Scope & Schedule*

☐ **3. SPECIAL MOMENT - RESISTING CONCRETE FRAME**
Inspection Scope & Schedule*
Frequency of Sampling Materials
Frequency of Testing

☐ **4. REINFORCING STEEL AND PRESTRESSED STEEL TENDONS**
Inspection Scope & Schedule*
Method of Testing

5. WELDING

☐ **A. SPECIAL MOMENT - RESISTING STEEL FRAMES**
Inspection Scope & Schedule*
Type of non-destructive testing
Frequency of Tests

☐ **B. STRUCTURAL WELDING INCLUDING REINFORCING STEEL**
Inspection Scope & Schedule*
Type of non-destructive testing
Frequency of Tests

☐ **6. HIGH-STRENGTH BOLTING**
Inspection Scope & Schedule*
Method of Testing
Frequency of Testing

☐ **7. STRUCTURAL MASONRY**
Inspection Scope & Schedule*
Frequency of Sampling Materials
Frequency of Testing

☐ **8. REINFORCED GYPSUM CONCRETE**
Inspection Scope & Schedule*
Frequency of Sampling Materials
Frequency of Testing

OVER →

☐ **9. INSULATING CONCRETE FILL**
Inspection Scope & Schedule*

Frequency of Sampling Materials
Frequency of Testing

☐ **10. SPRAYED-ON FIREPROOFING**
Inspection Scope & Schedule*

Method of Inspection
Frequency of Sampling Materials
Frequency of Testing

☐ **11. PILING, DRILLED PIERS AND CAISSONS**
Inspection Scope & Schedule*

Method of Inspection

☐ **12. SHOTCRETE**
Inspection Scope & Schedule*

Method of Inspection
Frequency of Sampling Materials
Frequency of Testing

☒ **13. SPECIAL GRADING, EXCAVATION AND FILLING**
Inspection Scope & Schedule*

The engineered slopes and wall shall be constructed in accordance with the approved plan, applicable CBJ codes and shall be stable and not create a hazard to public or private property. Submit a letter from an Alaskan licensed engineer to the CBJ General Engineering Division stating the work has been inspected and completed in accordance with the design, is stabilized, and capable of withstanding the forces for which it was designed. The letter must include the engineer's professional stamp with signature.

☐ **14B. SPECIAL CASES** **TYPE:**
Inspection Scope & Schedule*

Method of Inspection
Other

☐ **14C. SPECIAL CASES** **TYPE:**
Inspection Scope & Schedule*

Method of Inspection
Other

SPECIAL INSPECTOR CERTIFICATION:

I hereby certify that I am qualified to perform the special inspection items marked above, that I will perform the special inspections at the appropriate times scheduled by the contractor and that I will submit weekly and final reports.

Special Inspector: Gabriel Hayden **Date:** 12/11/20

OWNER CERTIFICATION: (May be signed by Architect /Engineer of Record on Owner's behalf.)

I hereby certify that I will employ the aforementioned Special Inspector to perform the inspections shown above.

Owner: _____ **Date:** _____

BUILDING OFFICIAL'S APPROVAL OF PROPOSAL OF SPECIAL INSPECTION:

Building Official: _____ **Date:** _____

Note:

Special Inspection weekly reports must be submitted to the owner and to the Building Official within 5 working days of the last day of the week being reported to avoid Suspension of the Building Permit and possible Stop Work Order.
A monthly summary letter is required for overall status including any outstanding items that require followup. The final special inspection approval letter(s) must be submitted before use or occupancy. Any variation to the special inspection proposal requires prior approval of the Building Official.

* (extent of work inspected; continuous or periodic, frequency)

CITY AND BOROUGH OF JUNEAU
ALASKA'S CAPITAL CITY
COMMUNITY DEVELOPMENT

SUBDIVISION AND DEVELOPMENT PLAN APPLICATION

See subdivision hand-outs for more information regarding the permitting process and the materials required for a complete application.

NOTE: Must be accompanied by a DEVELOPMENT PERMIT APPLICATION form.

To be completed by Applicant

PROJECT SUMMARY

Subject Lot: Lot 5 Block 1 Belleview Subdivision, Peters Ln, Douglas, AK. Parcel ID: 1D050L140050. Current zoning: D-18. Area of the subject lot: 7,900 sq ft Applicant is requesting a minor "zero-lot-line" subdivision of the subject lot to create two parcels.

Number of Existing Parcels 1 Total Land Area 7,900 Number of Resulting Parcels 2

HAS THE PARCEL BEEN CREATED BY A MINOR SUBDIVISION IN THE PRECEDING 24 MONTHS

○ NO ○ YES Case Number _____

TYPE OF SUBDIVISION OR PLATTING APPROVAL REQUESTED

MINOR DEVELOPMENT
(changing or creating 13 or fewer lots)

- ○ Preliminary Plat (MIP)
- ○ Final Plat (MIF)
- ○ Panhandle Subdivision
- ○ Accretion Survey
- ○ Boundary Adjustment
- ○ Lot Consolidation (SLC)
- ○ Bungalow Lot Subdivision
- ● Common Wall/Zero Lot Subdivision
- ○ Other _____

MAJOR DEVELOPMENT
(changing or creating 14 or more lots)

- ○ Preliminary Plat (SMP)
- ○ Final Plat (SMF)
- ○ Preliminary Development Plan – PUD (PDP)
- ○ Final Development Plan – PUD (PDF) Preliminary
- ○ Development Plan – ARS (ARP) Final
- ○ Development Plan – ARS (ARF)
- ○ Bungalow Lot Subdivision
- ○ Common Wall/Zero Lot Subdivision
- ○ Other _____

ALL REQUIRED DOCUMENTS ATTACHED

- ☑ **Pre-application conference notes**
- ☑ **Narrative including:**
  - ☑ Legal description(s) of property to be subdivided
  - ☑ Existing structures on the land
  - ☑ Zoning district
  - ☑ Density
  - ☑ Access
  - ☑ Current and proposed use of any structures
  - ☑ Utilities available
  - ☑ Unique characteristics of the land or structure(s)
- ☑ **Preliminary Plat checklist**

----------DEPARTMENT USE ONLY BELOW THIS LINE----------

SUBDIVISION/PLATTING FEES	Fees	Check No.	Receipt	Date
Application Fees	$_____			
Admin. of Guarantee	$_____			
Adjustment	$_____			
Total Fee	**$_____**			

For assistance filling out this form, contact the Permit Center at 586-0770.

INCOMPLETE APPLICATIONS WILL NOT BE ACCEPTED

Case Number	Date Received

City & Borough of Juneau
Alaska's Capital City

Community Development & Engineering Departments
Mail: 155 South Seward Street
Juneau, Alaska 99801
Telephone: 586-0770 FAX: 586-3365

JUNEAU PERMIT CENTER, 4TH FLOOR MARINE VIEW CENTER, 230 South Franklin Street

Water Line Information

To be provided for any new building, addition, or remodel with added plumbing fixtures

1. **NEW FIXTURES:** List the number of each type of fixture that is new to this building. (Where no fixtures were before—this does not include fixtures being replaced.)

WFU	No. of Fixtures	
___	1	Bathtub (w/ or w/o showerhead)
___	0	Bathtub with ¾" valve
___	0	Bidet
___	3	Lavatory (bathroom sink)
___	1	Shower
___	3	Toilet
___	0	Urinal

WFU	No. of Fixtures	
___	1	Dishwasher
___	1	Clothes washer hook-up
___	0	Bar Sink
___	1	Kitchen Sink
___	0	Laundry Sink
___	1	Hose Bibb (for hose connection)

STAFF USE Total Additional WFU:	

2. **EXISTING FIXTURES:** List the number of each type of existing fixture in the building. (Fixtures to be left unchanged or replaced.)

WFU	No. of Fixtures	
___	___	Bathtub (w/ or w/o showerhead)
___	___	Bathtub with ¾" valve
___	___	Bidet
___	___	Lavatory (bathroom sink)
___	___	Shower
___	___	Toilet
___	___	Urinal

WFU	No. of Fixtures	
___	___	Dishwasher
___	___	Clothes washer hook-up
___	___	Bar Sink
___	___	Kitchen Sink
___	___	Laundry Sink
___	___	Hose Bibb (for hose connection)

STAFF USE Total Existing WFU:	
STAFF USE Grand Total WFU:	
STAFF USE Appendix C Total WFU:	

3. What is the **size** of the incoming water street service line? (pipe size from city main to curb-stop at property line.) TBD by City Engineering Dept. Inches
4. What is the **size** of the building service line? (pipe size from curb-stop entering the building.) N/A ___ Inches
5. What is the **distance** from the water shutoff box at the property line or well pump to the farthest plumbing fixture fed by this water service? N/A Feet
6. If known, what is the water **pressure** at the house, or low water pressure setting on the well pump? N/A PSI
7. What is the **height** measured vertically (above + or below -) of the highest fixture (new or existing) measured from the street level at the water shutoff box or well pump? 33 Feet

STAFF USE Hydrant PSI:		**STAFF USE** PSI Adjustment:		**STAFF USE** Total PSI:	

Invitation to Comment

On a proposal to be heard by the CBJ Planning Commission

Your Community, Your Voice

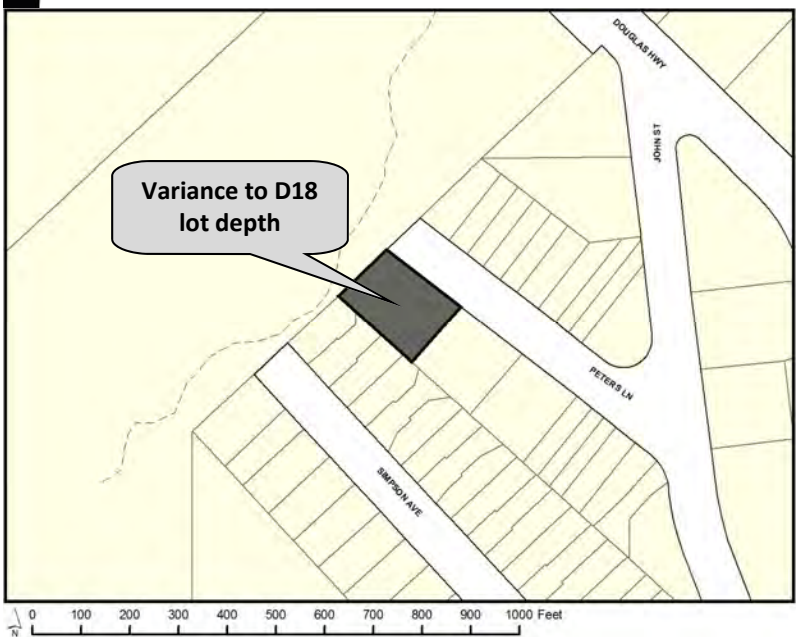

CITY AND BOROUGH OF JUNEAU
ALASKA'S CAPITAL CITY
COMMUNITY DEVELOPMENT

155 S. Seward Street Juneau, Alaska 99801

TO:

An application has been submitted for consideration and public hearing by the Planning Commission for a **variance to D18 lot depth from 80 to 78.2 feet for the purposes of a common wall subdivision** at **Peters Lane** in a **D18 zone**.

TIMELINE

Staff Report expected to be posted **Monday, April 5, 2021** at **https://juneau.org/community-development/planning-commission.** Find hearing results, meeting minutes and more here as well.

Now through March 22

Comments received during this period will be sent to the Planner, **Beth McKibben,** to be included as an attachment in the staff report.

Mar. 23 — noon, Apr. 12

Comments received during this period will be sent to Commissioners to read in preparation for the hearing.

HEARING DATE & TIME: 7:00 pm, April 13, 2020

This virtual meeting will be by video and telephonic participation only. To join the Webinar, visit: https://juneau.zoom.us/j/95201900876. The Webinar ID is: 952 0190 0876. To join by telephone, call: +1 253 215 8782 or +1 346 248 7799 or +1 669 900 6833 or +1 301 715 8592 or +1 312 626 6799 or +1 929 436 2866 and enter the Webinar ID.

April 14

The results of the hearing will be posted online.

Phone: **(907)586-0715** ◆ Email: **pc_comments@juneau.org**
Mail: **Community Development, 155 S. Seward St, Juneau AK 99801**

Printed March 9, 2021

Case No.: VAR2021 0001
Parcel No.: 1D050L140050
CBJ Parcel Viewer: http://epv.juneau.org

CITY AND BOROUGH OF JUNEAU
ALASKA'S CAPITAL CITY
COMMUNITY DEVELOPMENT

(907) 586-0715
CDD_Admin@juneau.org
www.juneau.org/CDD
155 S. Seward Street • Juneau, AK 99801

COMMUNITY DEVELOPMENT DEPARTMENT - REQUEST FOR AGENCY COMMENT

DEPARTMENT: Fire Marshal Daniel Jager, Capital City Fire Rescue

STAFF PERSON/TITLE: Beth McKibben, Senior Planner

DATE: March 8,2021

APPLICANT: Natalia Golovatiuk

TYPE OF APPLICATION: variance to minimum lot depth

PROJECT DESCRIPTION:

Applicant seeks a variance to the required minimum lot depth in the D15 zoning district. If approved the applicant would subdivide the lot into two common wall lots.

LEGAL DESCRIPTION: Belleview Block I Lot 5

PARCEL NUMBER(S): 1D050L140050

PHYSICAL ADDRESS: no number Peters Lane Douglas

SPECIFIC QUESTIONS FROM PLANNER:

AGENCY COMMENTS:

This project, as proposed, on the lots identified does not bring up any fire code or fire department concerns. Any public concerns regarding fire or emergency apparatus access is going to be a longer term challenge that will most likely require other agency review and comment than just the fire code. As long as there is at least a 20 foot wide drivable surface, not necessarily paved, then emergency apparatus can drive down Peters Lane. the 20 foot width does not have to be continuous as on street parking may be intermittent and not necessarily solid along one or both sides of the street.

The application in question is for Lot 5 to be allowed to subdivide and have two common wall lots. This project does not cross a threshold where additional fire or emergency apparatus access requirements would come into review at this time. Any concerns regarding access should be addressed in a different format and again, with other agency stakeholders.

AGENCY COMMENTS (CONTINUED):

CITY AND BOROUGH OF JUNEAU
ALASKA'S CAPITAL CITY
COMMUNITY DEVELOPMENT

(907) 586-0715
CDD_Admin@juneau.org
www.juneau.org/CDD
155 S. Seward Street • Juneau, AK 99801

COMMUNITY DEVELOPMENT DEPARTMENT - REQUEST FOR AGENCY COMMENT

DEPARTMENT: PW/Eng

STAFF PERSON/TITLE: Ed Foster, Ops Superintendent II

DATE: March 8,2021

APPLICANT: Natalia Golovatiuk

TYPE OF APPLICATION: variance to minimum lot depth

PROJECT DESCRIPTION:

Applicant seeks a variance to the required minimum lot depth in the D15 zoning district. If approved the applicant would subdivide the lot into two common wall lots.

LEGAL DESCRIPTION: Belleview Block I Lot 5

PARCEL NUMBER(S): 1D050L140050

PHYSICAL ADDRESS: no number Peters Lane Douglas

SPECIFIC QUESTIONS FROM PLANNER:

AGENCY COMMENTS:

Street Maintenance has no issues with this request for variance, providing the developer installs driveways in accordance with CBJ Standards.

The concerns voiced by neighboring residents were based on a flooding event caused during a 100 years storm. At which time we experienced major water shed through a drainage ditch just North of this property. That water shed caused a minor land slide that plugged the culvert running under Peters Lane and redirected the water to flow down Peters Lane ditch towards John St.. Recently before this storm the developer of this property had installed a non-permitted driveway with an under sized culvert. That culvert also plugged from debris washing down the hill and caused water to flow over Peters Lane into the homes across the street.
Not to say this will never happen again, but properly sized and properly installed culverts will help prevent it.

Peters Lane is signed "No Parking Anytime" on the up hill side and "No Parking Nov thru April" on the down hill side. However the signage isn't obvious so we will be improving on it as soon as weather allows.

AGENCY COMMENTS (CONTINUED):

From: John Bohan
To: Autumn Sapp; Beth McKibben; Ed Foster
Subject: RE: Agency Review VAR21-01
Date: Wednesday, March 10, 2021 7:24:31 AM

No concerns from my end.

Thanks
John Bohan, PE
CBJ Chief CIP Engineer
155 S. Seward St
Juneau AK 99801
(907)586-0876 fax 463-2606

From: Autumn Sapp <Autumn.Sapp@juneau.org>
Sent: Wednesday, March 10, 2021 7:12 AM
To: Beth McKibben <Beth.McKibben@juneau.org>; John Bohan <John.Bohan@juneau.org>; Ed Foster <Ed.Foster@juneau.org>
Subject: RE: Agency Review VAR21-01

I think the same response still applies. NA for GE.

Thanks,

Autumn Sapp
City and Borough of Juneau
Engineering & Public Works
Business Manager
907-586-0917

From: Beth McKibben <Beth.McKibben@juneau.org>
Sent: Tuesday, March 9, 2021 3:51 PM
To: Autumn Sapp <Autumn.Sapp@juneau.org>; John Bohan <John.Bohan@juneau.org>; Ed Foster <Ed.Foster@juneau.org>
Subject: RE: Agency Review VAR21-01

Correction

The variance is to lot depth (not width).

Thank you.

From: Autumn Sapp <Autumn.Sapp@juneau.org>
Sent: Tuesday, March 9, 2021 2:53 PM
To: Beth McKibben <Beth.McKibben@juneau.org>; John Bohan <John.Bohan@juneau.org>; Ed Foster <Ed.Foster@juneau.org>

Subject: RE: Agency Review VAR21-01

Good afternoon,

GE does not have an issue with the reduced width of the properties in question.

Thanks,

Autumn Sapp
City and Borough of Juneau
Engineering & Public Works
Business Manager
907-586-0917

From: Beth McKibben <Beth.McKibben@juneau.org>
Sent: Tuesday, March 9, 2021 1:45 PM
To: John Bohan <John.Bohan@juneau.org>; Autumn Sapp <Autumn.Sapp@juneau.org>; Mary Hammond <mary.hammond@juneau.org>; Charlie Ford <Charlie.Ford@juneau.org>; Ed Foster <Ed.Foster@juneau.org>; Dan Jager <Dan.Jager@juneau.org>
Subject: Agency Review VAR21-01

Hello

Attached is an application for a variance to minimum lot width. If approved the applicant would be allowed to subdivide the lot into two common wall lots, each with a single family home. The lot does not meet the minimum lot depth for the D15 zoning district.

Please return your comments by March 16th.

Thank you

Beth McKibben, AICP | Senior Planner
Community Development Department | City & Borough of Juneau, AK
Location: 230 S. Franklin Street, 4th Floor Marine View Building
Office: 907.586.0465

Fostering excellence in development for this generation and the next.

From: Autumn Sapp
To: Beth McKibben; John Bohan; Ed Foster
Subject: RE: Agency Review VAR21-01
Date: Wednesday, March 10, 2021 7:11:39 AM

I think the same response still applies. NA for GE.

Thanks,

Autumn Sapp
City and Borough of Juneau
Engineering & Public Works
Business Manager
907-586-0917

From: Beth McKibben <Beth.McKibben@juneau.org>
Sent: Tuesday, March 9, 2021 3:51 PM
To: Autumn Sapp <Autumn.Sapp@juneau.org>; John Bohan <John.Bohan@juneau.org>; Ed Foster <Ed.Foster@juneau.org>
Subject: RE: Agency Review VAR21-01

Correction

The variance is to lot depth (not width).

Thank you.

From: Autumn Sapp <Autumn.Sapp@juneau.org>
Sent: Tuesday, March 9, 2021 2:53 PM
To: Beth McKibben <Beth.McKibben@juneau.org>; John Bohan <John.Bohan@juneau.org>; Ed Foster <Ed.Foster@juneau.org>
Subject: RE: Agency Review VAR21-01

Good afternoon,

GE does not have an issue with the reduced width of the properties in question.

Thanks,

Autumn Sapp
City and Borough of Juneau
Engineering & Public Works
Business Manager
907-586-0917

From: Beth McKibben <Beth.McKibben@juneau.org>
Sent: Tuesday, March 9, 2021 1:45 PM
To: John Bohan <John.Bohan@juneau.org>; Autumn Sapp <Autumn.Sapp@juneau.org>; Mary Hammond <mary.hammond@juneau.org>; Charlie Ford <Charlie.Ford@juneau.org>; Ed Foster <Ed.Foster@juneau.org>; Dan Jager <Dan.Jager@juneau.org>
Subject: Agency Review VAR21-01

Hello

Attached is an application for a variance to minimum lot width. If approved the applicant would be allowed to subdivide the lot into two common wall lots, each with a single family home. The lot does not meet the minimum lot depth for the D15 zoning district.

Please return your comments by March 16th.

Thank you

Beth McKibben, AICP | Senior Planner
Community Development Department | City & Borough of Juneau, AK
Location: 230 S. Franklin Street, 4th Floor Marine View Building
Office: 907.586.0465

Fostering excellence in development for this generation and the next.

City and Borough of Juneau

155 S Seward Street

Juneau, Alaska 99801

Re Case Number VAR2021 0001

Parcel 1D959L140050

To whom it may concern

We reside across the street from the proposed development and believe that several situations need to be remedied prior to the approval of the Variance.

While we have only lived here since November, we have seen pictures of the flood that occurred in May of 2020 caused by an unnamed creek coming down the side of the mountain. It appears to us from the drawing that the development is proposed either at the border of this creek or adjacent to the border. Any variance for this parcel should have significant improvement to the drainage of this creek for the 100-year rainfall occurrence.

Our second concern is that this portion of Peters Lane is an unfinished roadway, that would appear to be non-conforming to the density suggested by the development. It is unpaved, poorly drained, and very narrow. When there is parking on this street, I believe that fire trucks or any other emergency vehicle could not get through.

In addition, the slope of the mountain at this location is severe, with the condos above being build on concrete piles. It is unclear to me whether this construction has been approved for severe earthquakes, but the projected development would be in their path.

Parking is a severe issue on this small road, and any approval of any variance should include the requirement for at least one garage and one parking spot completely off the road.

There are no sidewalks on this road, and there should be some accommodation for the handicapped people. It is a heavily used road for dog walkers, and right now is dangerous because people cannot get out of the road safely.

Thank you for considering these serious issues in the review process.

Sincerely

Frank and Nancy Baxter

2814 Peters Lane

Juneau, Alaska 99801

P O Box 240012, Douglas, Alaska 99824

fhbaxter@msn.com

From: Boheme <an1898inn@aol.com>
Sent: Friday, March 19, 2021 4:54 PM
To: PC_Comments
Subject: Peters Lane Variance proposal.

EXTERNAL E-MAIL: BE CAUTIOUS WHEN OPENING FILES OR FOLLOWING LINKS

Hello Beth and Juneau Community Development and planning commission,

I am a resident of Peters Lane and have lived here for the past 20 plus years. I am concerned with the proposed new building on Peters Lane. I understand there is a variance that needs to be considered, and I appreciate having knowledge of this. I have questions about the design of the building and how the construction is being planned and monitored. I had damage in the amount of $14,000.00 to my home in 2019 because of ill planned non permitted lot clearing in combination with heavy rain that year. I want neighborhood improvements, but I have concerns about my home preservation as I have endured costly damage and repairs that were not covered by insurance. I am in concurrence with the variance that is being requested, and at the same time I would like to see improvement to our neighborhood.

Sincerely,

Ann House

Boheme
907-586-2050
175 S Franklin St
Juneau Alaska 99801

From: PC_Comments
To: Beth McKibben
Subject: FW: Comments to Planner Beth McKibben re: Variance request on Peters Lane
Date: Friday, March 19, 2021 10:20:24 AM

Hey Beth,

Here's the email.

Jack Scholz | Administrative Assistant I
Community Development Department | City & Borough of Juneau, AK
Location: 230 S. Franklin Street, 4th Floor Marine View Building
Main Line: 907.586.0715 | Personal Line: 907.586.0736

Fostering excellence in development for this generation and the next.

From: Julie Costello <juneautwins@hotmail.com>
Sent: Friday, March 19, 2021 9:54 AM
To: PC_Comments <PC_Comments@juneau.org>
Cc: Julie Costello <juneautwins@hotmail.com>; Boheme <an1898inn@aol.com>
Subject: FW: Comments to Planner Beth McKibben re: Variance request on Peters Lane

EXTERNAL E-MAIL: BE CAUTIOUS WHEN OPENING FILES OR FOLLOWING LINKS

Sent from Mail for Windows 10

From: Julie Costello
Sent: Friday, March 19, 2021 8:50 AM
To: Beth McKibben
Subject: Comments to Planner Beth McKibben re: Variance request on Peters Lane

Hello Beth McKibben and the Juneau Community Development Planning Commission,

Thank you for the opportunity to submit a comment before the upcoming hearing for a variance to D18 lot depth 80 to 78.2 feet for the purposes of a common wall subdivision at Peters Lane in a D18 zone.

I am the townhome and property owner across the street from the proposed variance. I have resided at 2812 Peters Lane for the past 20 years. I have serious concerns about the new construction that is planned on the uphill side of Peters Lane where the building of duplex's are currently being considered. My concerns are that the stability of the hillside supporting the existing condos above the proposed construction site on Simpson Street, supporting ditches, culvert and roadway on Peters Lane are being very well considered. I understand that a variance isn't going to change the building process but I also have previously endured costly home repair (not covered by my homeowners insurance) that was caused by the lack of proper lot prep without permitting and a heavy rainstorm season. I am submitting a series of photos to share with you that were taken October of 2019.
In addition to my house concerns I would like to point out the road conditions on Peters Lane. The road has not been properly repaired since the flood of 2019 and parking on our street is at a minimum. The uphill side of Peters Lane has no parking signage as the Lane should be kept clear for emergency responders, this is the same side of the street where new construction is proposed. I feel the general maintenance of the road, parking, ditches and culvert will be seriously impacted by the new construction and I have concerns how this little street is going to support so much.
I believe the existing homes and property need to be at the forefront of consideration during this process. I personally cannot afford to fix my home out of pocket again. Thank you for your time in reviewing my comments and looking at photos supporting my concerns.

Sincerely,

Julie Costello

2812 Peters Lane
Juneau, AK
99801

Sent from Mail for Windows 10

Attachment D - Public Comments

Attachment D - Public Comments

Attachment D - Public Comments

Attachment D - Public Comments

Attachment D - Public Comments

Attachment D - Public Comments

Attachment D - Public Comments

Attachment D - Public Comments

Attachment D - Public Comments

Attachment D - Public Comments

Attachment D - Public Comments

CITY AND BOROUGH OF JUNEAU
ALASKA'S CAPITAL CITY
COMMUNITY DEVELOPMENT

(907) 586-0715
CDD_Admin@juneau.org
www.juneau.org/CDD
155 S. Seward Street • Juneau, AK 99801

NONCONFORMING CERTIFICATE

Date: March 26, 2021
File No.: NCC2021 0017

Natalia Golovatiuk
7602 Lumbis Avenue Unit 4
Anchorage, AK 99518

Proposal:	A Nonconforming Certification Review for lot.
Property Address:	Peters Lane
Property Legal Description:	Belleview Block I Lot 5
Property Parcel Code No.:	1D050L140050

The Director of Community Development adopted the analysis and findings listed in the attached memorandum dated March 26, 2021, and has found the following situations on the lot to be certified nonconforming to the Title 49 Land Use Code of the City and Borough of Juneau:

- Nonconforming Lots (49.30.260):
  - Lot depth of 78.12 feet

This Nonconforming Certificate applies to the nonconforming situations stated above. The nonconforming rights provided herein may be relinquished under certain circumstances provided under the CBJ Title 49 Land Use Code. It is the responsibility of the owner or agent of the owner to ensure that all development on the lot is in compliance with this certification and the CBJ Title 49 Land Use Code.

This Nonconforming Certificate constitutes a final decision of the Director of Community Development. Appeals must be brought to the CBJ Planning Commission in accordance with CBJ 49.20.110. Appeals must be filed by 4:30 P.M. on the day twenty days from the date the decision is filed.

If you have any questions regarding your project or anticipate any changes to your plans, please call the Community Development Department at (907) 586-0715.

Project Planner:

Beth McKibben, Senior Planner, AICP
Community Development Department

Jill Maclean, Director, AICP
Community Development Department

NOTE: The Americans with Disabilities Act (ADA) is a federal civil rights law that may affect this development project. ADA regulations have access requirements above and beyond CBJ-adopted regulations. Owners and designers are responsible for compliance with ADA. Contact an ADA - trained architect or other ADA trained personnel with questions about the ADA: Department of Justice (202) 272-5434, or fax (202) 272-5447, NW Disability Business Technical Center (800) 949-4232, or fax (360) 438-3208.

(907) 586-0715
CDD_Admin@juneau.org
www.juneau.org/CDD
155 S. Seward Street • Juneau, AK 99801

Peters Lane Commonwall

Case Number: PAC2020 0043

Applicant: Natalia Golovatiuk

Property Owner: same

Property Address: N/A

Parcel Code Number: 1D050L140050

Site Size: 7,900 square feet

Zoning: D18 (18 DU/acre)

Existing Land Use: Vacant

Conference Date:	July 8, 2020
Report Issued:	07/17/20

List of Attendees

Note: Copies of the Pre-Application Conference Report will be emailed, instead of mailed, to participants who have provided their email address below.

Name	Title	Email address
Natalia Golovatiuk	Applicant	Odessa.club@yahoo.com
Beth McKibben, AICP	Senior Planner	beth.mckibben@juneau.org
Kyle Paw	Permit Tech	Kyle.paw@juneau.org
Autumn Sapp	General Engineering	Atuumn.Sapp@juneau.org

Conference Summary

Questions/issues/agreements identified at the conference that weren't identified in the attached reports.
The following is a list of issues, comments and proposed actions, and requested technical submittal items that were discussed at the pre-application conference.

Planning Division

1. **Zoning** – D18
    a. Minimum lot size of 5,000 square feet; minimum lot size for common wall 2,500 sq. feet; Multifamily (3 units +) 2,420 sq. ft. per unit – this lot max units of 3.2
    b. Minimum lot width 50 ft.; Minimum lot depth 80 ft. 49.65.750 Dimensional standards for common wall development – min lot width of 20 ft.; Common wall shall extend at least 15 ft. along the common property line.
    c. 49.25.300.1.910 Common wall development 2 units –allowed use building permit only
    d. 49.25.300.1.920 Common wall development 3 or more units – 1, 3 – use permit required when more than 9 units. NOTE –this lot is NOT large enough to support more than 3 common wall units.
    e. 49.65.730 requires all common wall dwellings to be served by individual public water and sewer service.
2. **Setbacks** – Front 20 ft.; Rear 10ft; side 5 ft.; street side 13 ft.; Common wall side yard 5 ft with note 7: zero foot setback for the portion of the dwelling with a common wall, five foot setback or five foot easement for the portion of the dwelling at the common lot line without a common wall, and five foot setback for the remaining side yards of the lot.
    a. 49.65.755 prohibits architectural features other than roof eaves authorized to project into required yard setbacks by 49.24 article IV may from projecting into required side yards. No architectural features may project into the neighboring lots.
3. **Height** –35 ft. primary structure; 25 ft accessory structures – see attached handout for calculating building height
4. **Access – Peters Lane – local residential**
5. **Parking & Circulation**–Minimum of 2 off street parking spaces per dwelling unit; back out parking is permissible. 49.65.735 Parking and access for common wall developments will apply if commonwall subdivision is pursued. Required parking must be off-street.
6. **Lot Coverage –**50% maximum lot coverage (structures/rooflines)
7. **Vegetative Coverage** – Minimum vegetative cover of 30% Vegetative cover should be shown on site plan
8. **Lighting** – No off site glare
9. **Noise** – No impacts expected from residential use
10. **Flood** – N/A

11. Hazard/Mass Wasting/Avalanche/Hillside Endorsement – Not in mapped hazard area – The majority of the lot has a grade in excess of 18% a hillside endorsement will be required for new development. *A grading and site plan stamped by an Engineer is required. See attached section of code for Hillside Endorsements for the application requirements. Hillside endorsement applies only to any areas where slopes exceed 18% or where new slopes are being created in excess of 18% for the following:*

a. Removal of vegetative cover; excavation of any slope in excess of 18%; creation of new slope in excess of 18% for a vertical distance of at least 5 feet;

As a minor development the hillside endorsement may be reviewed by the Director of CDD. The hillside endorsement will be submitted with the grading permit for site work prior to, or concurrently with the building permit.

Test holes for the purpose of gathering information for the Hillside Endorsement do not require a hill side endorsement. They may require a grading permit.

12. Wetlands – n/a
13. Habitat – None noted. If an active eagle's nest is discovered, contact the US Fish and Wildlife Service.
14. Plat or Covenant Restrictions – none found
15. Traffic – Traffic impact analysis not required, expected average trips per day approximately 10 per unit.
16. Nonconforming situations – None noted
17. Common wall Process 49.65 Article 7
    a. Common wall development (residential) 49.25.300 Table of Permissible Uses 1.920; minor development is Director review, major development is PC review; 8 dwelling units or less in a multifamily district is considered minor development and requires a common wall subdivision (a minor subdivision):
    b. <u>First Step</u>:
        i. Development Permit: submit the sketch plat (site plan) depicting the existing parcels, and the proposed common walls, setbacks, access, parking etc. per 49.65.710

        and

        ii. Building Permit: obtain a building permit – a condition will be included that the lots are to be common walls prior to the issuance of any C.O.s
    c. <u>Second Step</u>:
        i. Minor subdivision process creating the common wall lots once the foundations are poured and the exact location of the common wall lot lines are known

<u>Common Wall Development</u> (will be Department Review – minor development)

49.65.710 - Development permits.

(a) The development permits required for construction of common wall development are either department review, or planning commission review under the conditional use permit process. The particular permit is determined by which zoning district within which the project is located, and the proposed number of units, in accordance with the CBJ table of permissible uses.

(1) Department review.

(A) Application submittals. The following submittals are required with an application for department approval:

(i) Building plans that meet the requirements of this chapter and Title 19.

(ii) A sketch plat in accordance with CBJ 49.15.410. The sketch plat must include information necessary to demonstrate that the proposed common wall development will be able to comply with all the dimensional standards of this article after the parcel and structure have been divided.

(iii) A draft set of common wall agreements and homeowner agreements which set forth the rights and obligations of the owners for all common elements of the development.

(B) Application review. The application shall be reviewed by the director in accordance with CBJ 49.15.310.

49.65.720 - Common wall subdivision.

(a)The applicant shall submit an application to subdivide the common wall development into individual dwellings and lots in accordance with 49.15.401, 49.15.402, CBJ 49.65 article VII, and the following additional requirements:

*(1) **Preliminary plat.** The following additional items will be submitted with the preliminary plat:*

(A) An as-built survey that includes all structures and the location of the common walls in relation to the proposed common property lines.

(B) Framing inspections that document substantial construction of all units in accordance with the preliminary plans approved by the director or the commission through the department approval, or the conditional use process, respectively.

(C) Final common wall agreements and/or homeowners' agreements suitable for recording.

*(b) **Final plat**: After* review and approval of the final plat, in accordance with CBJ 49.15.412, the plat and the common wall agreement documents may be recorded by the department at the state recorder's office at Juneau at the applicant's expense, after issuance of final occupancy permits.

General Engineering/Public Works

18. Engineering –

    a. **Driveway:** Driveway grades in excess of 14% are beyond what is allowed by code. For driveway grades steeper than 14%, the driveway will need to be designed and inspected by an Alaskan licensed civil engineer at cost to the developer.

b. **Easements**: Site plan (plat) shall include all existing (and proposed) easements for drainage, utility lines including plumbing lines, access, snow storage, trash (dumpster) storage, or any other shared use that requires crossing the property line. For plats include the width, ownership, use, and record reference of all proposed and existing easements within the subdivision and within 100 feet of the subdivision boundary.

c. **Agreements:** A maintenance and hold harmless (of CBJ) agreement will need to be drafted, signed, and recorded for all shared infrastructure for the development, e.g. driveway, water, sewer, etc.

19. **Drainage** – Submit a drainage plan indicating how drainage from the proposed subdivision will join an established drainage channel or structures. The plan must be designed by an Alaskan licensed engineer due to the hillside endorsement requirements of Title 49. All drainage and site development will also need to be inspected by an Alaskan licensed engineer at no cost to CBJ. Easements must be provided on the plat for all established drainage ways or any proposed drainage ways that cross any current or future abutting property lines.

20. **Utilities** – (water, power, sewer, etc.) A minimum of 1" water service and 4" sewer service will need to be installed to the property line of each newly created lot within one-year of recording of the plat. At the time of preliminary plat submittal, please submit a construction plan for the new utilities. The submittals must meet current CBJ Standards and Specifications. The plan needs to include pipe locations, type, sizing, for both water and sewer and grades for sewer to indicate appropriate fall will be achieved. The construction plan can be shown on an existing as-built drawing that also includes existing features such as structures and other existing utilities.

    The following permits will need to be obtained to provide utilities to the property line of the newly created lot:

    a. **CBJ right-of-way (ROW) permit**- Once the construction plan for the utilities is approved, CBJ will create the ROW permit. The permit will allow the tapping of the water and sewer mains, water and sewer service installation, and road restoration within the right-of-way. Inspection fees, refundable bond amount, and conditions will be determined after review of the proposed construction plan. The extension of the utilities within the property will require further permitting and fee assessments. This process is done separately from the subdivision and typically in conjunction with the building permit application.

    Once within the private property the following utility permits are required:

    a. **Water Utility permit** – for the water/fire line to be installed to the new structure. The line sizing is determined by the engineer. If there is more than one dwelling unit installed on one property then a meter is required to be installed prior to any branches in the plumbing line. The meter location and sizing shall be shown on the mechanical plans. See the attached CBJ Standard Detail 420, Meter Installation, for meter clearances and conduit installation requirements for the remote read-out (MIU) installation. The meter installation and conduit installation is the responsibility of the applicant. A water assessment will need to be paid and will be determined after sizing of meter (if required) and domestic line are identified.

    b. **Sewer Utility permit** – for the sewer line to be installed to the new structure. The line sizing is determined by the engineer. The mechanical plans shall include a drainage fixture

unit (DFU) count. A sewer assessment and inspection fees will need to be paid and will be determined after review of the DFU's and the configuration of the underground sewer line.

Sewer options:

a. For a duplex with no subdivision - Minimum 6" sewer service may be installed within the Peters Lane right-of-way within the roadway to the existing 8" mainline. To determine if this will be feasible it is advised to work with an Alaskan licensed mechanical engineer to determine if the existing pipe will provide the capacity required. Please be aware that the property owner is responsible for maintenance, repair, or replacement or any or all of the sewer line and service from the structure to the point of connection at the main line.

b. For subdivided property with zero-lot line structure - Extend the 8" mainline, install a manhole, install two minimum 4" sewer services to the newly created lots, and one minimum 4" sewer service to neighboring lot 4. CBJ Engineering & Public Works has offered to provide the materials, pipe, fittings and manhole, and inspection for the work within the Peters Land right-of-way. CBJ Engineering & Public Works is also willing to design this option, but will only commence the design after the option of extending the mainline is selected.

Other Applicable Agency Review

21. N/A

List of required applications

Based upon the information submitted for pre-application review, the following list of applications must be submitted in order for the project to receive a thorough and speedy review.

1. Grading permit
2. Building Permit
3. Development Permit: submit the sketch plat (site plan) depicting the existing parcels, and the proposed common walls, setbacks, access, parking etc. per 49.65.710
4. Minor subdivision application *to create lot line at the common wall after foundations are poured and exact location of the common lot line is known.*
5. Final Plat
6. Hillside Endorsement

Additional Submittal Requirements

Submittal of additional information, given the specifics of the development proposal and site, are listed below. These items will be required in order for the application to be determined Counter Complete.

1. A copy of this pre-application conference report
2. Preliminary plat check list
3. If shared driveway is proposed –draft maintenance agreement for shared driveway

4. Additional materials as required by 49.65 Article 7 – as-built, common wall and homeowner agreements, easements etc.
5. Additional materials as required by 49.70 Article 2 – vicinity map, site maps, site plan, engineered drawings, etc.

Exceptions to Submittal Requirements

Submittal requirements staff has determined **not** to be applicable or **not** required, given the specifics of the development proposal, are listed below. These items will **not** be required in order for the application to be reviewed.

1. Test holes for purposes of gathering information for the hillside endorsement application do not require a hill side endorsement.

Fee Estimates

The preliminary plan review fees listed below can be found in the CBJ code section 49.85.

Based upon the project plan submitted for pre-application review, staff has attempted to provide an accurate estimate for the permits and permit fees which will be triggered by your proposal.

1. Building permit fees – Will be determined at time of application
2. Minor subdivision Fee - $400 plus $25 for each resulting lot ($450.00 total),
3. Hillside endorsement – gross hourly rate for professional review and inspection. Developer shall deposit 1% the value of the site development, excluding the portion of the site determined by the engineer to be subject to public transmission facility permit, in a specialty reserve account, which the CBJ may bill its documented time and expenses. Developer shall promptly replenish the amount when requested. No endorsement shall be issued if there is a deficiency in the reserve account. All unexpended funds in the reserve account shall be returned to the developer upon final approval of the development or when the engineer is satisfied the work under the endorsement is complete and the requirements met.
4. Water Utility Permit (work within private property):
    a. Water assessment fee based on the domestic line size and will be determined during plan review. Covers the cost of permit issuance, issuance of meter, and MIU installation.
5. Sewer Utility Permit (work within private property):
    a. Based on DFU and will be determined at time of plan review.
    b. $60.00 per inspection or trip, will be determined at time of construction plan review.
6. ROW Permit (work within the ROW):
    a. $10 permit fee
    b. Inspection fees - $60 per inspection trip or hour, will be determined at time of construction plan review (if the sewer mainline extension option is selected this fees will only apply to the water installation).
    c. Refundable bond – will be determined at time of construction plan review. Can be paid in the form of cash, check, surety, or conveyance.
    d. Bond fee – dependent on type of bond payment.

For informational handouts with submittal requirements for development applications, please visit our website at www.juneau.org/cdd.

Submit your Completed Application

You must submit your application(s) in person with payment made to:

City & Borough of Juneau, Permit Center
230 South Franklin Street
Fourth Floor Marine View Center
Juneau, AK 99801

Phone: (907) 586-0715
Fax: (907) 586-4529
Web: www.juneau.org/cdd

CITY AND BOROUGH OF JUNEAU
ALASKA'S CAPITAL CITY
LAW DEPARTMENT

MEMORANDUM

DATE: April 21, 2021

TO: Planning Commission and Board of Adjustment

FROM: Sherri Layne, Assistant Municipal Attorney

SUBJECT: Subdivisions, variances, and nonconforming situations

---

At the public hearing on April 13, 2021, the Planning Commission ("Commission") sitting at the Board of Adjustments asked for guidance on (1) the implications of a dismissal of the application for a variance, and (2) if a minor subdivision must have a variance to build a minor subdivision on a nonconforming property.

1. *What are the implications of a 'dismissal' of the application?*

   The Commission may dismiss the variance application; however, the two-lot subdivision must still be approved by the Director. The Director has the authority over minor subdivisions (CBJC 49.15.501(a)) such as this one. The Commission can dismiss – however, that could expose the Commission to an appeal based on not making a decision on the application. Playing this scenario out, even if the Commission chose to dismiss, the applicant would still need a permit from the Director for a common wall subdivision, which is not allowed under the nonconforming section of code or under the dimensional standards requirements in CBJC 49.25.400. If the Director does not grant the permit for a subdivision, the applicant would then need to appeal back to the Commission. However, the Commission does not have authority over minor subdivisions, so the Commission would follow the criteria in reviewing the Director's decision, and if the Commission found an error, it would remand it back to the Director.

2. *Does a property owner need a variance to apply for a minor subdivision on a nonconforming property?*

   Yes.

   It may be helpful to keep in mind what the CBJ has indicated as the purpose of the nonconforming code. In April 2020, the CBJ said "the certification of nonconforming situations is expected to ease sales of nonconforming situations. A Nonconforming Certificate may be acquired at any time. Property owners are encouraged to seek a Nonconforming Certificate for their property prior to listing it for sale."

The relevant sections of the nonconforming code are CBCJ 49.30.230 and 49.30.250, and 49.80 Definitions. Reviewing these sections, it indicates a nonconforming lot has the same development rights as the previous owner. While it allows the same rights as the previous owner and the same development rights as other property owners, the property owner *must* still comply with zoning and permitting requirements. If the property owner wants to develop the property outside of what is allowed under Title 49, they should apply for a variance. The variance process is the proper process for asking to go outside of the requirements and essentially get permission to violate Title 49. Based on the code and case law, a variance is only warranted in very limited circumstances.

In this case, the previous owner's nonconforming rights would allow several development options, including a single family dwelling, a duplex, or a tri-plex. Subdividing the nonconforming lot into two nonconforming lots aggravates the already existing nonconforming situation. The property owner would end up with two nonconforming lots. Further, in order to subdivide, both lots needs to meet the dimensional standards in CBJC 49.25.400. Note that even a conforming lot must meet dimensional standards to subdivide. A common wall development, as proposed by the applicant, is considered a subdivision under CBJC 49.65.720 and CBJC 49.80 includes "subdivision" under the definition of "development".

Keep in mind that the Commission has the authority to makes its own findings based on the staff report, presentations, public testimony, and discussion. The Commission can make new findings – it just needs to be very, very clear in the facts and reasoning to support it.

Additional information that may help in your analysis:

49.20.250 – Grounds for variances

(b) *Non-administrative variances.*

(1) A variance may be granted to provide an applicant relief from requirements of this title after the prescribed hearing and after the board of adjustment has determined that:

(A) Enforcement of the ordinance would create an undue hardship resulting from the unusual or special conditions of the property;

(B) The unusual or special conditions of the property are not caused by the person seeking the variance;

(C) The grant of the variance is not detrimental to public health, safety, or welfare; and

(D) The grant of the variance is narrowly tailored to relieve the hardship.

Relevant variance case law:

> *City and Borough of Juneau v. Thibodeau*, 595 P.2d 626 (AK 1979) – More profitable use of land is not a basis for a variance.
>
> Courts have also stated that applicants must show the denial of the variance would leave them with no other reasonable use of the property and that no reasonable return could be made on the property.
>
> *E&F v. Zoning Board of Appeals of the Town of Fairfield* 320 Conn. 9 (2015) (bad measurement put building addition into the setback) – Artificial or self-created hardship is not enough. "Financial considerations are relevant only if the application of the regulation or ordinance practically destroys the value of the property for any use to which it may be put *and* the regulation or ordinance as applied to the subject property bears little relationship to the purpose of the zoning plan".
>
> Courts have stated that a "zoning regulation that prevents land from being used for its greatest economic potential does not create the exceptions kind of financial hardship" that Courts have deemed to have a "confiscatory or arbitrary effect".
>
> Several courts have stated "hardship alone is not sufficient" and variances from the terms of the zoning ordinance should be permitted "only under peculiar and exceptional circumstances."

Lastly, there was a question about whether or not there is any liability for CBJ because the applicant indicates she spent over $20,000 on engineering and surveying based on information she received (and did not receive) at her pre-application conference.

To be clear, the answer is no. Under AS 09.65.070(d), the applicant may not file an action for damages against the CBJ in this particular situation.

Revised Notice

Re: Variance to D18 Lot Depth

Continued Public Hearing

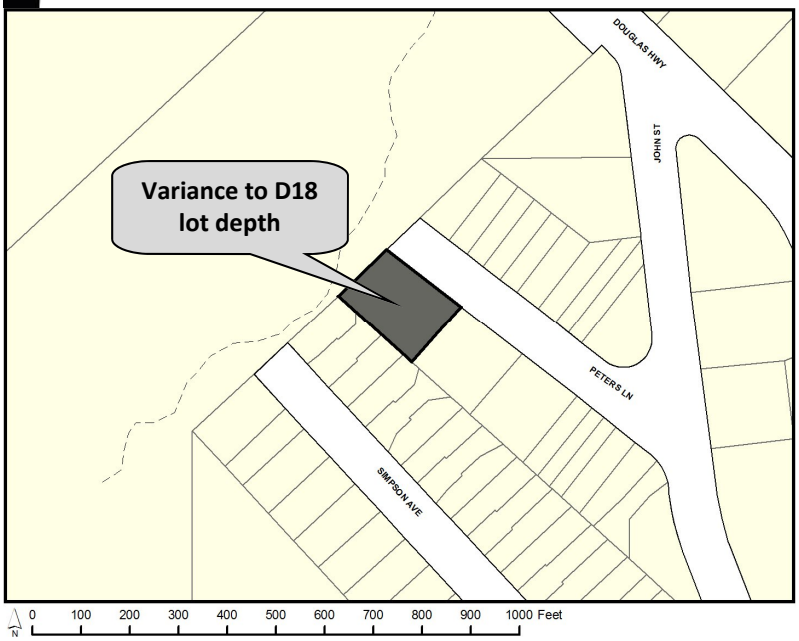

CITY AND BOROUGH OF JUNEAU
ALASKA'S CAPITAL CITY
COMMUNITY DEVELOPMENT
155 S. Seward Street Juneau, Alaska 99801

TO:

CONTINUED PUBLIC HEARING FROM APRIL 13, 2021

You are receiving this notice regarding an application being heard by the Planning Commission for a variance to D18 lot depth from 80 to 78.2 feet for the purposes of a common wall subdivision at Peters Lane. **This application will be continued to May 11, 2021.**

TIMELINE

The staff report for this application is currently posted at: **https://juneau.org/community-development/planning-commission.** Find hearing results, meeting minutes and more here as well.

Now — noon, May 10

Comments received during this period will be sent to Commissioners to read in preparation for the hearing.

HEARING DATE & TIME: 7:00 pm, May 11, 2021

This virtual meeting will be by video and telephonic participation only. To join the Webinar, visit: https://juneau.zoom.us/j/91520615798. The Webinar ID is: 915 2061 5798. To join by telephone, call: +1 253 215 8782 or +1 346 248 7799 or +1 669 900 6833 or +1 301 715 8592 or +1 312 626 6799 or +1 929 436 2866 and enter the Webinar ID.

May 12

The results of the hearing will be posted online.

Phone: **(907)586-0715** ◆ Email: **pc_comments@juneau.org**
Mail: **Community Development, 155 S. Seward St, Juneau AK 99801**

Printed April 28, 2021

Case No.: VAR2021 0001
Parcel No.: 1D050L140050
CBJ Parcel Viewer: http://epv.juneau.org

VAR2021 0001

Recommend **DENIAL** of a variance to minimum lot depth from 80 to76.23 (proposed Lot 5A) and 79.45 (proposed Lot 5B) feet for the purposes of a common wall subdivision.

Lot 5 Block I Bellview Subdivision

Peters Lane D18

CITY AND BOROUGH OF JUNEAU
ALASKA'S CAPITAL CITY

Variance standards 49.20.250(b)

- Undue hardship caused by unusual conditions of the property
- Unusual conditions not caused by person seeking the variance
- No detriment to public health, safety and welfare
- Narrowly tailored

CITY AND BOROUGH OF JUNEAU
ALASKA'S CAPITAL CITY

Agenda

- General orientation and overview
- Proposed subdivision
- Variance standards

Background is in your packet, let me know if you have any questions.

CITY AND BOROUGH OF JUNEAU
ALASKA'S CAPITAL CITY

Orientation and Overview

Orientation and Overview

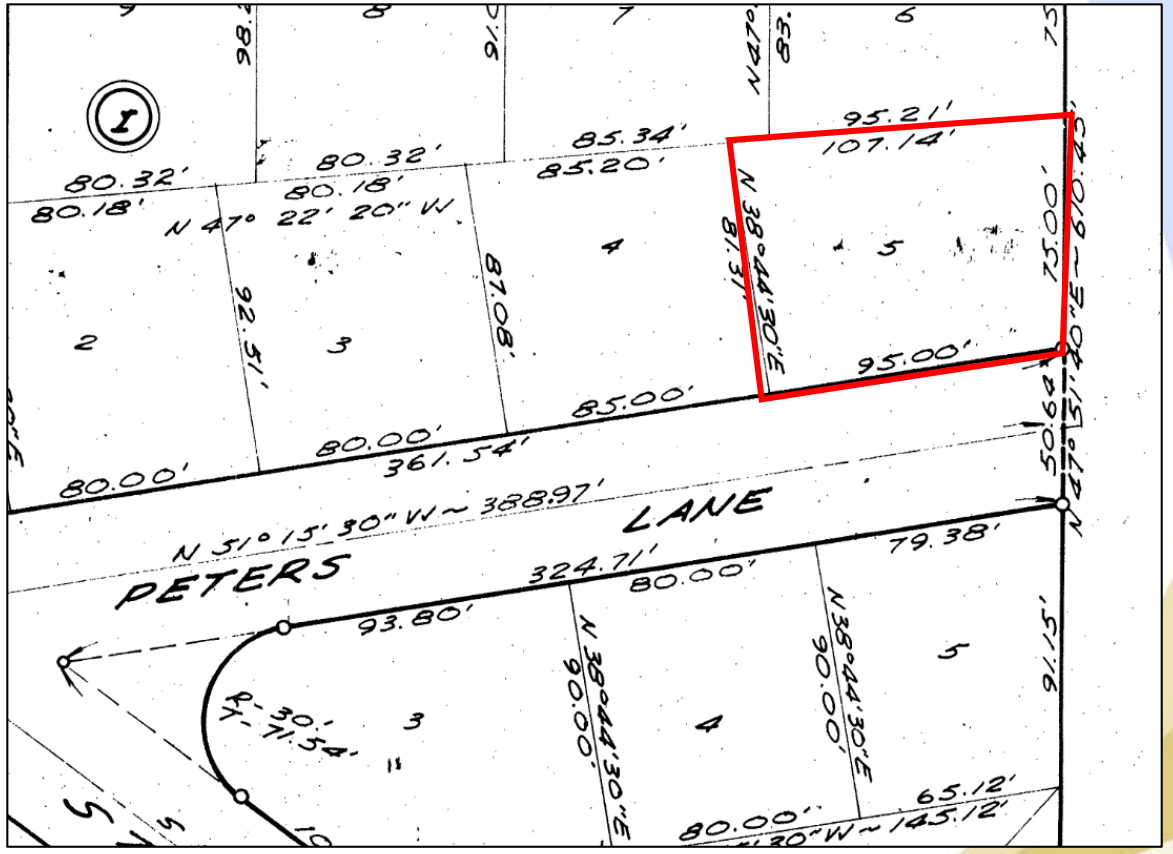

Proposed subdivision

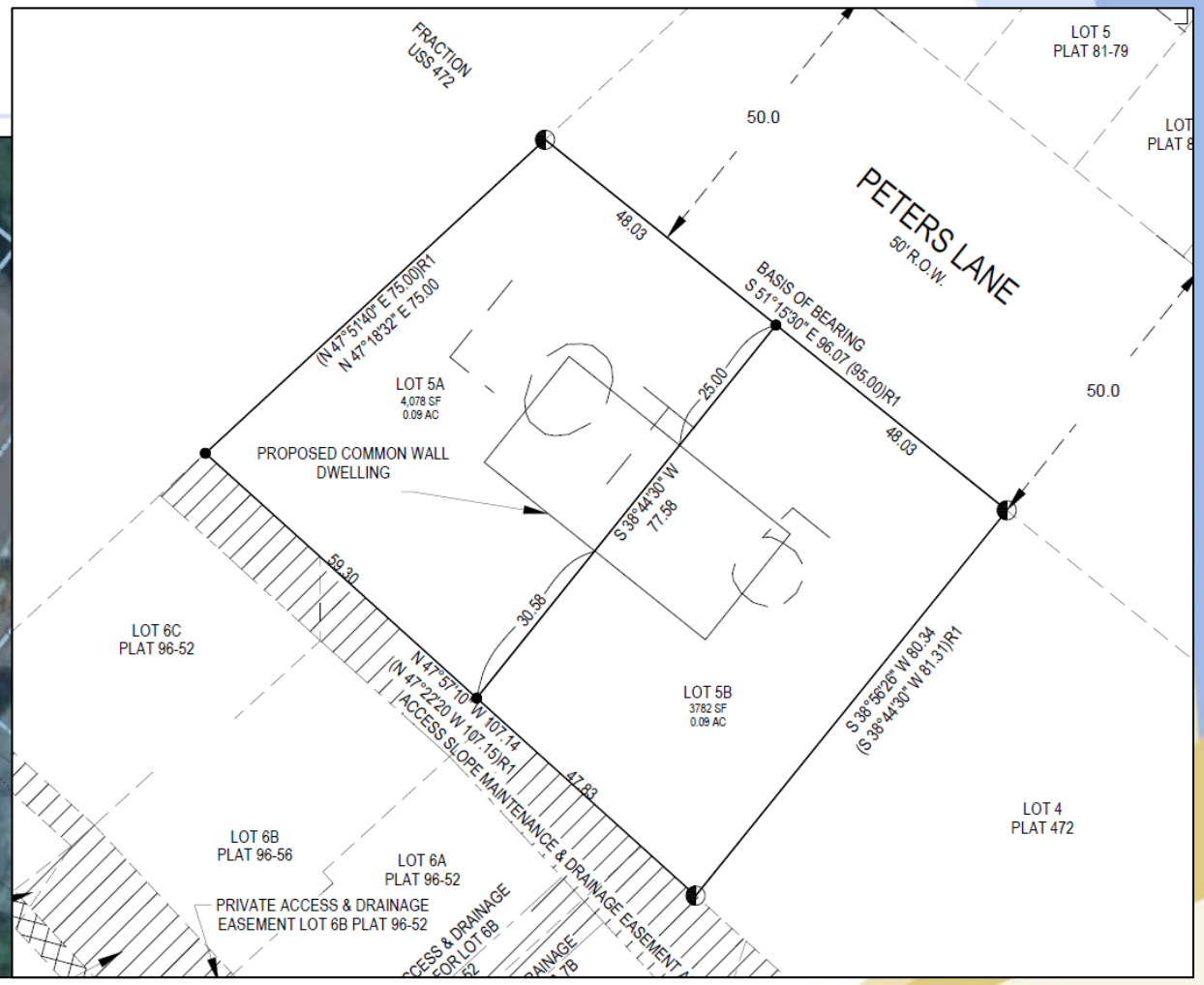

Proposed subdivision

Standard (Common wall)	Requirement	Existing	Requested		Code Reference
			Lot 51A	Lot 5B	
Lot Size, square feet	2,500	7,9000	4,078	3,782	49.25.400
Lot Width, linear feet	20	~107	59.3	47.83	49.25.400
Lot Depth, linear feet	80	78.12	~76.3	~79.5	49.25.400

CITY AND BOROUGH OF JUNEAU
ALASKA'S CAPITAL CITY

How lot depth determined

Page 30 of your packet

Lot depth means the average distance measured from the front lot line to the rear lot line.

(North lot line depth + south lot line depth) / 2 = lot depth

CITY AND BOROUGH OF JUNEAU
ALASKA'S CAPITAL CITY

Variance Standards

- Undue hardship caused by unusual conditions of the property
- Unusual conditions not caused by person seeking the variance
- No detriment to public health, safety and welfare
- Narrowly tailored

CITY AND BOROUGH OF JUNEAU
ALASKA'S CAPITAL CITY

Undue hardship

- Keeps the lot from being used as intended
- Distinct from similarly situated properties

- Zoned D18
- Vacant lot
- Development options –
  - up to 3 units
  - Duplex as designed
  - 2 unit structure with land in common (condominium) with HOA
  - Single family with accessory apartment

- Subdivision not an entitlement of code

CITY AND BOROUGH OF JUNEAU ALASKA'S CAPITAL CITY

Undue hardship – similarly situated

CITY AND BOROUGH OF JUNEAU
ALASKA'S CAPITAL CITY

Variance Standards

- Undue hardship caused by unusual conditions of the property
- Unusual conditions not caused by person seeking the variance
- No detriment to public health, safety and welfare
- Narrowly tailored

CITY AND BOROUGH OF JUNEAU
ALASKA'S CAPITAL CITY

Unusual conditions of property

No unusual conditions of the property

- Lot is steeply sloped, as is the rest of the neighborhood
- No wetlands or streams
- Not in a flood zone
- Need for variance is created by the desire to subdivide

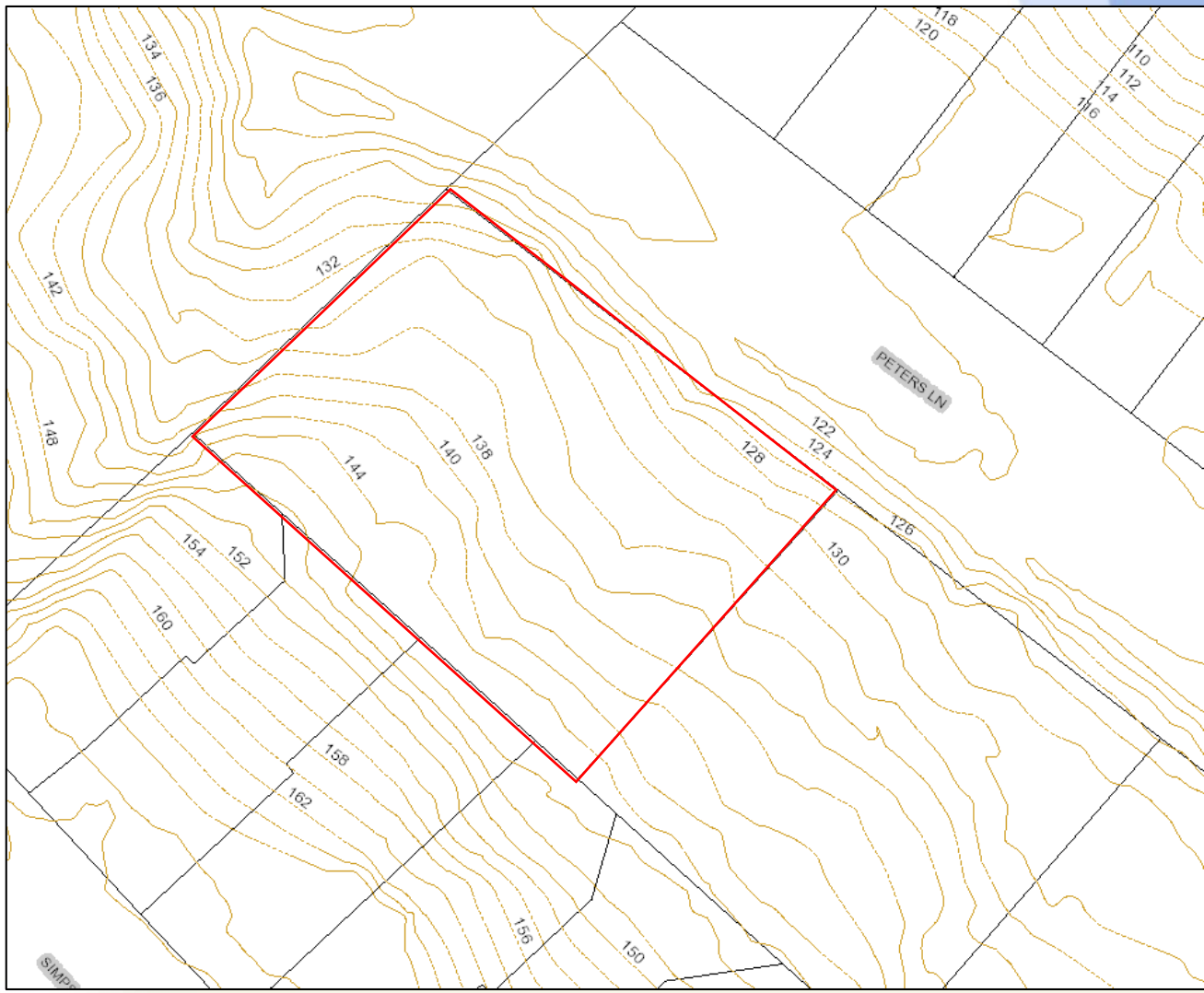

Variance Standards

- Undue hardship caused by unusual conditions of the property
- Unusual conditions not caused by person seeking the variance
- No detriment to public health, safety and welfare
- Narrowly tailored

CITY AND BOROUGH OF JUNEAU
ALASKA'S CAPITAL CITY

Narrowly tailored

- No hardship to tailor it to
- The desire to subdivide self-creates hardship

- Two lots with varied depth
- Variance request is the minimum needed

CITY AND BOROUGH OF JUNEAU ALASKA'S CAPITAL CITY

Public Comments

Name	Summary
Frank & Nancy Baxter	Concern with drainage from an unnamed creek; narrow unpaved street, poorly drained, emergency vehicle access when vehicles are parked on the street, safety of proposed structure in the event of an earthquake; requirement for off-street parking; no sidewalks on the street and need for accommodations for handicapped people; and danger to pedestrians.
Julie Costello	Concern for consideration of the stability of hillside supporting existing condominiums uphill from proposed development; culverts, ditches, and roadway during and after construction. Road needs maintenance. Concern for ability of narrow roadway to support additional development.
Ann House	Questions about the building design; and how construction will be monitored; concerns about impacts of development because of damage incurred during storms in 2019. Expressed concurrence with the variance request, but would like to see improvement to the neighborhood.
Eric Niewoehner (Additional Materials)	Concern with drainage in the area and increased runoff from additional development on Peters Lane.

Agency Comments

Agency	Summary
CCFR	No fire code or fire department concerns from the project as proposed. Public concerns regarding emergency vehicle access is a longer term challenge. Emergency apparatus requires a minimum of a 20-foot wide drivable surface, which does not have to be paved (per fire standards).
CBJ Streets	No concerns with the variance request provided the developer installs driveways in accordance with CBJ standards. Peters Lane is signed for no parking but signage isn't obvious. Streets will improve this signage when weather allows. Concerns from neighbors were a result of a 100 year storm event and a non-permitted driveway with an undersized culvert. Properly sized driveways culverts will help prevent this from happening in the future.

CITY AND BOROUGH OF JUNEAU
ALASKA'S CAPITAL CITY

Variance Standards

- Undue hardship caused by unusual conditions of the property
- Unusual conditions not caused by person seeking the variance
- No detriment to public health, safety and welfare
- Narrowly tailored

CITY AND BOROUGH OF JUNEAU
ALASKA'S CAPITAL CITY

Recommend DENIAL

- Variance standards not met.

Thank You

CITY AND BOROUGH OF JUNEAU
ALASKA'S CAPITAL CITY

Planning Commission
(907) 586-0715
PC_Comments@juneau.org
www.juneau.org/plancomm
155 S. Seward Street • Juneau, AK 99801

BOARD OF ADJUSTMENT
NOTICE OF DECISION

Date: May 20, 2021
File No.: VAR2021 0001

Natalia Golovatiuk
7602 Lumbis Ave, Unit 4
Anchorage, AK 99518

Proposal:	Variance for minimum lot depth from 80 to 76.23 (proposed Lot 5A) and 79.45 (proposed Lot 5B) feet for the purposes of a common wall subdivision
Property Address:	Peters Lane
Legal Description:	Belleview Block I Lot 5
Parcel Code No.:	1D050L140050
Hearing Date:	May 11, 2021

The Board of Adjustment, at its regular public meeting, adopted the analysis but did not adopt all of the findings listed in the attached memorandum dated March 30, 2021. The Board of Adjustment made new findings for criterion A, B, and D (as shown below) and approved the Variance to be conducted as described in the project description and project drawings submitted with the application.

New findings made by the Board of Adjustment:

A. ***Enforcement of the ordinance would create an undue hardship resulting from the unusual or special conditions of the property.***

Yes. The unusual condition is the lot itself, as the surrounding area is all zero lot lines and common wall subdivisions, and in keeping with the area, it would prevent the owner from using a similarly situated lot, as seen by Lot 6 behind it. This application is different than the variance (VAR2020 0002) denied in November 2020, because they (VAR2020 0002 applicant)

had a variance approved under previous code that they (VAR2020 0002 applicant) did not act upon, and because they (VAR2020 0002 applicant) were not told at a pre-application conference to get some engineering done.

Finding: This criterion is met.

B. ***The unusual or special conditions of the property are not caused by the person seeking the variance.***

Yes. The applicant acted in good faith and was told it would be successful, which is unique. A special condition is the lot itself, which is steep. There is a water issue and developing that land to stabilize the bank and deal with surface water is a benefit.

Finding: This criterion is met.

D. ***The grant of this variance is narrowly tailored to relieve the hardship.***

Yes. The applicant has requested the bare minimum reduction in lot depth needed to facilitate the common wall subdivision.

Finding: This criterion is met.

Attachment: March 30, 2021, memorandum from Beth McKibben, Community Development, to the CBJ Board of Adjustment regarding VAR2021 0001.

This Notice of Decision does not authorize construction activity. Prior to starting any development project, it is the applicant's responsibility to obtain the required building permits.

This Notice of Decision constitutes a final decision of the CBJ Board of Adjustment. Appeals must be brought to the CBJ Assembly in accordance with CBJ 01.50.030. Appeals must be filed by 4:30 p.m. on the day twenty days from the date the decision is filed with the City Clerk, pursuant to CBJ 01.50.030 (c). Any action by the applicant in reliance on the decision of the Board of Adjustment shall be at the risk that the decision may be reversed on appeal (CBJ 49.20.120).

Effective Date: The permit is effective upon approval by the Board, May 11, 2021.

Expiration Date: The permit will expire 18 months after the effective date, or November 11, 2022, if no Building Permit has been issued and substantial construction progress has not been made in accordance with the plans for which the development permit was authorized. Application for permit extension must be submitted thirty days prior to the expiration date.

	May 20, 2021
Michael LeVine, Chair Planning Commission	Date
	May 20, 2021
Filed With City Clerk	Date

cc: Plan Review

NOTE: The Americans with Disabilities Act (ADA) is a federal civil rights law that may affect this development project. ADA regulations have access requirements above and beyond CBJ-adopted regulations. Owners and designers are responsible for compliance with ADA. Contact an ADA-trained architect or other ADA trained personnel with questions about the ADA: Department of Justice (202) 272-5434, or fax (202) 272-5447, NW Disability Business Technical Center (800) 949-4232, or fax (360) 438-3208.

PLANNING COMMISSION AGENDA
THE CITY AND BOROUGH OF JUNEAU, ALASKA

Joint Procedural Motion: APL2021 0001, an appeal of Director's determination regarding ENF2021 0015 - Request for Compliance Hearing Date

AGENDA ITEM:

Case No.: APL2021 0001
Applicant: A & S Rentals
Location: 1506 2nd Street, 1510 2nd Street, 1508 3rd Street
Proposal: Joint Procedural Motion: APL2021 0001, an appeal of Director's determination regarding ENF2021 0015 - Request for Compliance Hearing Date

ATTACHMENTS:

	Description	Upload Date	Type
	Joint Procedural Motion	4/27/2021	Miscellaneous

BEFORE THE PLANNING COMMISSION OF
THE CITY AND BOROUGH OF JUNEAU

A & S RENTALS LLC, Appellant.	APL 2021-0001 Appeal of ENF20210015 **JOINT PROCEDURAL MOTION**

Appellant, A & S Rentals LLC (hereinafter, "A & S"), by and through counsel Simpson, Tillinghast, Sheehan & Araujo, P.C., and Appellee, the CBJ Community Development Department ("CDD"), by and through counsel, CBJ Law Department, together request the hearing procedural accommodations set forth below.

Parties request a compliance hearing date at the planning commission normal meeting on June 8, 2021, or at the earliest possible interval thereafter. Parties anticipate needing two hours maximum for the hearing and request the following format or similar:

Submission of any exhibits, witness lists, opening briefs (5 pages maximum), and any other document/pleading agreed to by the parties at least one week prior to the hearing.

Openings - 10 minutes each.

Brief witness testimony.

Closing - 10 minutes each.

Simpson, Tillinghast, Sheehan & Araujo, P.C.
Attorney for Appellant

Date: April 27, 2021

By: Todd J. Araujo
Todd J. Araujo, Esq.
Alaska Bar No. 0806040

CBJ Community Development Department
Attorney for Appellee

Date: April 27, 2021

By: Sherri Layne
Sherri Layne, Esq.
Alaska Bar No. 1306042

PLANNING COMMISSION AGENDA
THE CITY AND BOROUGH OF JUNEAU, ALASKA

Additional Material for May 11, 2021 Planning Commission

ATTACHMENTS:

	Description	Upload Date	Type
	Additional Material for May 11, 2021 Planning Commission	5/11/2021	Miscellaneous

Additional Materials

Regular Planning Commission Meeting

Virtual Meeting Only
7:00pm
Meeting Date: May 11, 2021

---

1. **VAR2021 0001:**
    a. Public Comment – Grant J Rich, received 5.10.21

2. **SMF2021 0002:**
    a. Correction memo from Laurel Christian

From: Grant Rich <grich67@gmail.com>
Sent: Monday, May 10, 2021 7:12 AM
To: PC_Comments
Subject: My comment for Revised Notice/variance to D18 Lot Depth Continued Public Hearing

EXTERNAL E-MAIL: BE CAUTIOUS WHEN OPENING FILES OR FOLLOWING LINKS

Dear community development. CBJ and relevant parties,

I am responding in advance of the noon May 10 deadline to the mailing I received for the Revised Notice Re: Variance to D18 Lot Depth Continued Public Hearing

I recently purchased almost exactly one year ago, my home at 2961 Simpson Ave. A major reason for my purchase of this home, was the beauty of the unobstructed views from my upstairs and downstairs windows.

I was alarmed to receive the notification of the possible D18 lot variance, and I write to make several comments and describe my concerns.

First, I don't see need for divider wall between subdivisions

Next, I don't my view blocked; I bought this house at 2961 Simpson Ave one year ago because I wanted the lovely unobstructed views.

I would like to know, would my lot and the neighboring lot both have property taken away to build the wall? I don't want to lose about 2 feet of my lot.

Also, how high is wall and is it aesthetically beautiful or a blight on the neighborhood view, which would lower property values

Furthermore, how will this wall/change impact my property value?

Finally, if property is taken from me, will I be compensated and by whom? How much could I charge to sell this piece of property?

Please confirm receipt of this email,

Sincerely,

Grant J Rich, PhD

Homeowner, 2961 Simpson Ave

Juneau, Alaska

cell 907-723-2942

====

Case no VAR2021 0001

Parcel No 1D050L140050

CITY AND BOROUGH OF JUNEAU
ALASKA'S CAPITAL CITY
COMMUNITY DEVELOPMENT

(907) 586-0715
CDD_Admin@juneau.org
www.juneau.org/CDD
155 S. Seward Street • Juneau, AK 99801

May 11, 2021

MEMO

From: **Laurel Christian, Planner II**

To: **Michael LeVine, Chair**

Parcel No.: **5B2401620011**

Legal Description: **Thunder Mountain Park Tract 1A**

Case Number: **SMF2021 0002 / ARF2021 0001**

RE: Final Plat Attachment

SMF2021 0002: The final plat attached to the staff report for SMF2021 0002 is an outdated version (packet page 50).

ARF2021 0001: The final plat attached to the staff report for ARF2021 0001 is the correct version (packet page 273).

The plat dated April 12, 2021 is the correct version of the final plat. This can be found on packet page 273 and is attached to this memorandum.

GENERAL NOTES

1. ALL BEARINGS SHOWN ARE TRUE BEARINGS AS ORIENTED TO THE BASIS OF BEARING AND DISTANCES SHOWN ARE REDUCED TO HORIZONTAL FIELD DISTANCES.
2. THE ERROR OF CLOSURE OF THIS SURVEY DOES NOT EXCEED 1:10,000.
3. BASIS OF BEARING
   THE BASIS OF BEARING FOR THIS PLAT IS THE BEARING OF S 0° 01' 00" W, AS SHOWN ON PLAT No. 73-17, DATED OCTOBER 29, 1973, BETWEEN THE RECOVERED MONUMENTS, AS SHOWN ON THIS PLAT.
4. WHERE RECORD SURVEY COURSES (BEARINGS AND/OR DISTANCES) DIFFER FROM THAT OF ACTUAL FIELD MEASURED AND/OR COMPUTED SURVEY COURSES, THE RECORD BEARING AND/OR DISTANCES IS SHOWN WITHIN PARENTHESIS AND REFERENCED TO A RECORDED PLAT (R#).
5. THE PRELIMINARY FIELD SURVEYING WAS PERFORMED ON MAY 26-27, 2020, UTILIZING A TRIMBLE S7 ROBOTICS TOTAL STATION WITH STANDARD LASER RANGING MEASUREMENTS.
6. RECORD INFORMATION
   THE RECORD INFORMATION USED FOR THIS SUBDIVISION IS DERIVED FROM THE OFFICIAL PLATS: PLAT No. 73-17, JUNEAU RECORDING DISTRICT, DATED OCTOBER 29, 1973 (R1), PLAT No. 92-18, JUNEAU RECORDING DISTRICT, DATED APRIL 28,1992 (R2);
7. ALL DISTANCES ARE MEASURED IN U.S. SURVEY FEET, AND HAVE BEEN REDUCED TO THEIR HORIZONTAL EQUIVALENTS.
8. DOMESTIC WATER AND SANITARY SEWER DISPOSAL PROVIDED BY THE CITY AND BOROUGH OF JUNEAU PUBLIC UTILITIES.
9. THIS PLAT CREATES AN ALTERNATE RESIDENTIAL SUBDIVISION PURSUANT TO AND GOVERNED BY THE CITY AND BOROUGH OF JUNEAU LAND USE CODE TITLE 49 ARTICLE IX. EACH OWNER OF A UNIT-LOT IS REQUIRED TO, AND SHALL BE, THROUGHOUT THEIR OWNERSHIP, A MEMBER OF THE THUNDER MOUNTAIN VIEWS HOA, INC., REQUIRED TO PAY ASSESSMENTS ASSESSED BY THUNDER MOUNTAIN VIEWS HOA, INC.
10. PER CBJ 49.15.920(j), NO PARKING AREAS, DWELLING UNITS, UNIT-LOTS, OR PERMISSIBLE USES MAY BE LOCATED WITHIN THE PERIMETER BUFFER. ACCESS TO THE DEVELOPMENT MAY CROSS A PORTION OF THE BUFFER.
11. ACCESS TO LOTS SHALL BE VIA ACCESS EASEMENTS SHOWN ON THIS PLAT AND IS SUBJECT TO THE REQUIREMENTS IN THE BYLAWS OF THUNDER MOUNTAIN VIEWS HOA, INC.
12. LOT 15, BLANKET EASEMENT, PERIMETER BUFFER, AND DRAINAGE EASEMENTS SHOWN ON THIS PLAT ARE PRIVATE EASEMENTS, AND THE LAND ON WHICH THE PRIVATE EASEMENTS ARE LOCATED IS OWNED AND MANAGE BY THUNDER MOUNTAIN VIEWS HOA, INC.

OWNERSHIP CERTIFICATE

BICKNELL, INC. HEREBY CERTIFIES THAT BICKNELL, INC. IS THE OWNER OF THE PROPERTY SHOWN AND DESCRIBED HEREON AND THAT IT HEREBY ADOPTS THIS PLAT OF SUBDIVISION WITH ITS FREE CONSENT, AND DEDICATE ALL STREETS, ALLEYS, WALKS, PARKS AND OTHER OPEN SPACES TO PUBLIC OR PRIVATE USE AS NOTED:

OWNER _____ DATE: _____ 2021
ROSCOE V. BICKNELL, IV
BICKNELL, INC.

NOTARY ACKNOWLEDGMENT

UNITED STATES OF AMERICA)
) SS
STATE OF ALASKA)

THIS IS TO CERTIFY THAT ON THIS_____ DAY OF_____, 2021, BEFORE ME, THE UNDERSIGNED A NOTARY PUBLIC IN AND FOR THE STATE OF ALASKA, DULY COMMISSIONED AND SWORN, PERSONALLY APPEARED _____ TO ME KNOWN TO BE THE PERSONS DESCRIBED IN AND WHO EXECUTED THE ABOVE AND FOREGOING INSTRUMENT, AND ACKNOWLEDGED TO ME THAT THEY SIGNED AND SEALED THE SAME FREELY AND VOLUNTARILY FOR THE USES AND PURPOSES THEREIN MENTIONED.
WITNESS MY HAND AND OFFICIAL SEAL THE DAY AND YEAR IN THIS CERTIFICATE FIRST ABOVE WRITTEN.

_____
NOTARY PUBLIC FOR ALASKA

MY COMMISSION EXPIRES: _____

PLANNING COMMISSION PLAT APPROVAL

I HEREBY CERTIFY THAT THE SUBDIVISION PLAT SHOWN HEREON HAS BEEN FOUND TO COMPLY WITH THE SUBDIVISION REGULATIONS OF THE CITY AND BOROUGH OF JUNEAU, ALASKA AND THAT SAID PLAT HAS BEEN APPROVED BY THE PLANNING COMMISSION BY PLAT RESOLUTION NO. _____ , DATED _____ , 2021 , AND THAT THE PLAT SHOWN HEREON HAS BEEN APPROVED FOR RECORDING IN THE JUNEAU RECORDING DISTRICT, STATE RECORDERS OFFICE AT ANCHORAGE.

_____
CHAIRMAN OF THE PLANNING COMMISSION
CITY AND BOROUGH OF JUNEAU

DATED _____ , 2021

ATTEST:

_____
MUNICIPAL CLERK
CITY AND BOROUGH OF JUNEAU

TYPICAL SECONDARY MONUMENT

(ESTABLISHED THIS SURVEY)

1" DIA. ORANGE SURVEY CAP ON
5/8" DIA. x 30" REBAR

RECOVERED MONUMENTS

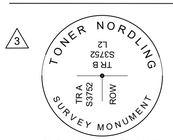

3" BRASS CAP PRIMARY
GOOD CONDITION
1.5' BELOW GRADE

3" BRASS CAP PRIMARY
GOOD CONDITION
FLUSH WITH GRADE

EASEMENT NOTE

A BLANKET EASEMENT ON LOT 15 FOR UTILITIES, DRAINAGE, AND EGRESS AND INGRESS ACCESS TO ALL UNIT-LOTS IS DEDICATED BY THIS PLAT AS A PRIVATE EASEMENT FOR THE BENEFIT OF THE MEMBERS OF THUNDER MOUNTAIN VIEWS HOA, INC., AND SHALL BE MANAGED BY THE THUNDER MOUNTAIN VIEWS HOA, INC.

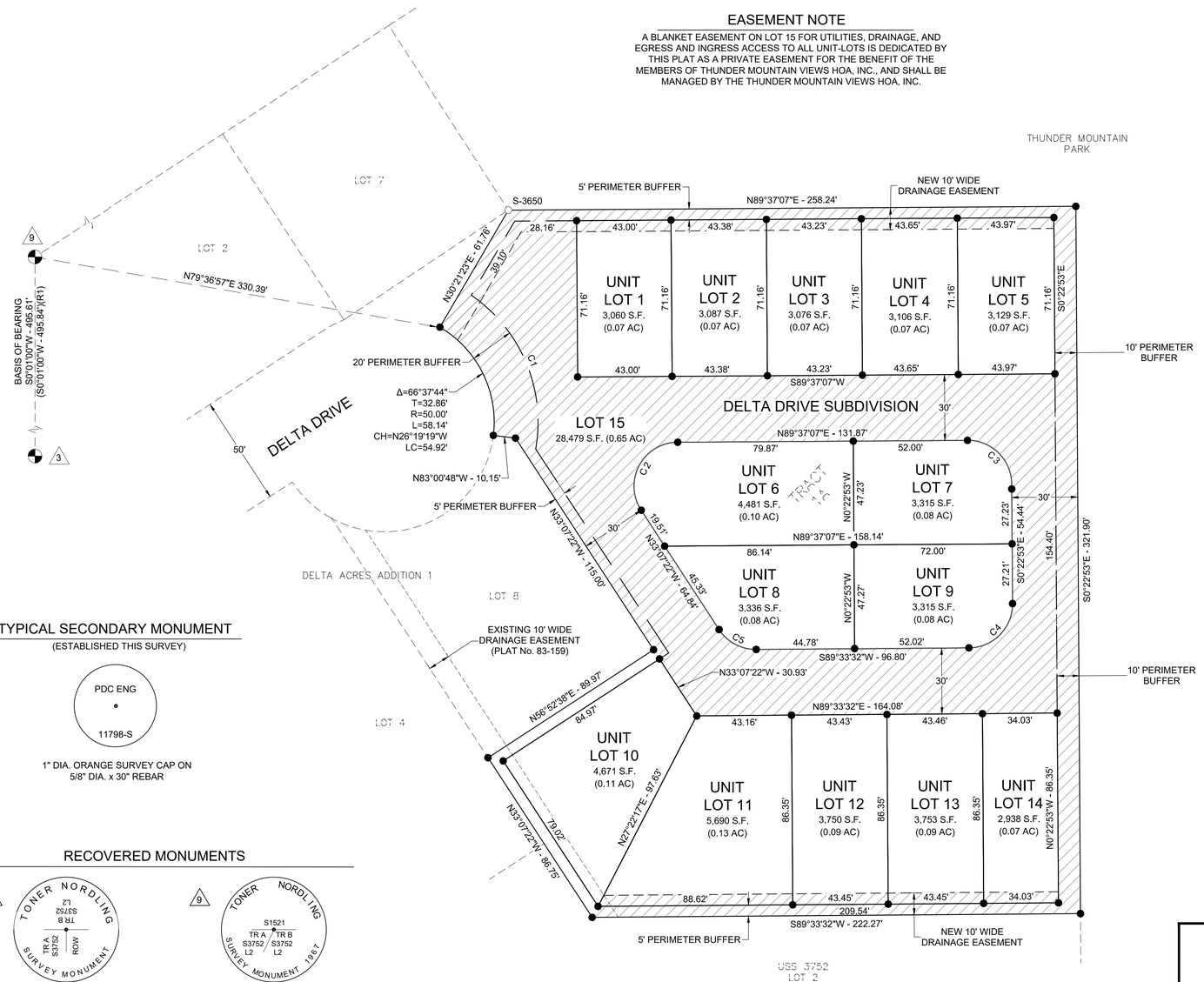

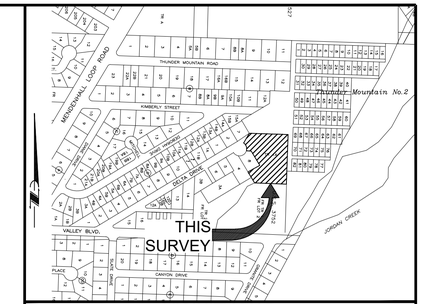

VICINITY MAP

SOURCE: CBJ PROPERTY ATLAS

SCALE: 1"= 500'

LEGEND

- PRIMARY MONUMENT (RECOVERED)
- SECONDARY MONUMENT (RECOVERED)
- SECONDARY MONUMENT (ESTABLISHED)
- SURVEYED LINE
- UNSURVEYED LINE
- EASEMENT LINE
- NEW EASEMENT LINE
- (R1) PLAT No. 73-17, JRD
- (R2) PLAT No. 92-18, JRD
- ACCESS, UTILITY & DRAINAGE EASEMENT
- PERIMETER BUFFER

SURVEYOR'S CERTIFICATE

I, CRAIG O. RANSON, IN MY CAPACITY AS A PROFESSIONAL LAND SURVEYOR REGISTERED IN THE STATE OF ALASKA, CERTIFY THAT THIS PLAT REPRESENTS THE SURVEY MADE BY ME OR UNDER MY DIRECT SUPERVISION, THAT THE ACCURACY OF THE SURVEY IS WITHIN THE LIMITS REQUIRED BY TITLE 49 OF THE CODE OF THE CITY AND BOROUGH OF JUNEAU, THAT ALL DIMENSIONS AND RELATIVE BEARINGS ARE CORRECT AND THAT MONUMENTS ARE SET IN PLACE AND NOTED UPON THIS PLAT AS PRESENTED.

DATE: 04/12/21

STATE OF ALASKA
49TH
CRAIG O. RANSON
LS 11798
REGISTERED PROFESSIONAL LAND SURVEYOR

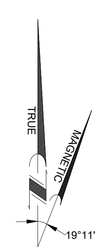

SOURCE: N.O.A.A.
MAGNETIC DECLINATION 19°11'E
NOVEMBER 14, 2017 CHANGING BY
0°17' W/YEAR

CURVE TABLE					
CURVE #	LENGTH	DELTA	RADIUS	CHORD BEARING	CORD DISTANCE
C1	80.21'	65° 38' 55"	70.00'	N22° 43' 05"W	75.89'
C2	42.84'	122° 44' 29"	20.00'	S28° 14' 53"W	35.11'
C3	31.42'	90° 00' 00"	20.00'	N45° 22' 53"W	28.28'
C4	31.40'	89° 56' 25"	20.00'	N44° 35' 20"E	28.27'
C5	20.01'	57° 19' 06"	20.00'	S61° 46' 55"E	19.18'

30' 0 15' 30' 60'
SCALE: 1"=30'

SMP20200004/ARP20200001

PDC ENGINEERS
PLAN • DESIGN • CONSTRUCT
A RESPEC COMPANY
9109 Mendenhall Mall Rd. Ste. 4, Juneau, AK 99801
907.780.6060 | AECC605

A PLAT OF
DELTA DRIVE SUBDIVISION
A SUBDIVISION OF
THUNDER MOUNTAIN PARK TRACT 1A
WITHIN U.S. SURVEY NO. 3752
WITHIN CITY AND BOROUGH OF JUNEAU, ALASKA
JUNEAU RECORDING DISTRICT

STATE RECORDER'S OFFICE AT ANCHORAGE

OWNER:
BICKNELL, INC.
P.O. BOX 33517
JUNEAU, AK 99803

SURVEYOR:
PDC ENGINEERS
9109 MENDENHALL MALL ROAD SUITE 4
JUNEAU, ALASKA 99801
(907) 780-6060

DATE: April 12,2021 SCALE: 1"=30' SHEET 1 OF 1 PDC PROJ. No. 20098JN

P:\2020\20098JN-Bicknell_Delta\LT001\dwg\20098JN - PLAT Apr 12, 2021 - 11:41 AM