REGULAR PLANNING COMMISSION AGENDA

February 24, 2026 at 6:00 PM

Assembly Chambers/Zoom Webinar

https://juneau.zoom.us/j/86847221296 or 1-253-215-8782 Webinar ID: 868 4722 1296

A. LAND ACKNOWLEDGEMENT

We would like to acknowledge that the City and Borough of Juneau is on Tlingit land and wish to honor the indigenous people of this land. For more than ten thousand years, Alaska Native people have been and continue to be integral to the well-being of our community. We are grateful to be in this place, a part of this community, and to honor the culture, traditions, and resilience of the Tlingit people. *Gunalchéesh!*

B. ROLL CALL

C. REQUEST FOR AGENDA CHANGES AND APPROVAL OF AGENDA

D. APPROVAL OF MINUTES

1. **January 13, 2026, Draft Minutes Regular Planning Commission — APPROVED**

2. **January 27, 2026, Draft Minutes Regular Planning Commission — APPROVED**

E. BRIEF REVIEW OF THE RULES FOR PUBLIC PARTICIPATION

F. PUBLIC PARTICIPATION ON NON-AGENDA ITEMS

G. ITEMS FOR RECONSIDERATION

H. CONSENT AGENDA

I. UNFINISHED BUSINESS

J. REGULAR AGENDA

1. **USE2025 0013: Applicant requests a Conditional Use Permit to construct a 38,000-square foot entertainment and retail building at 356 South Franklin Street in a Waterfront Commercial zone. — APPROVED AS RECOMMENDED**

Applicant: Reuben Willis
Location: 356 South Franklin Street

DIRECTOR'S REPORT

The proposed building includes three theater attractions, a retail space, and associated office and support areas. The property is zoned Waterfront Commercial, with the first 40 feet located within the Juneau Downtown Historic District. The proposed use is permissible

in the Waterfront Commercial zone through the conditional use permit process. The proposal is consistent with the 2013 Comprehensive Plan, the 2015 Economic Development Plan, and the Blueprint Downtown Area Plan. The applicant has also requested two variances for this project.

STAFF RECOMMENDATION
Staff recommends the Planning Commission adopt the Director's analysis and findings and approve Conditional Use Permit USE2025 0013 with the requested conditions.

2. **VAR2025 0008: Applicant requests a Non-Administrative Variance to reduce the west side yard setback from 10 feet to 0 feet for a length of 60 feet in a Waterfront Commercial zone. — APPROVED AS RECOMMENDED**

Applicant: Reuben Willis
Location: 356 South Franklin Street

DIRECTOR'S REPORT
The proposed building includes three theater attractions, a retail space, and associated office and support areas. The Waterfront Commercial zone requires 10-foot setbacks on all sides. The first 40 feet of the site lies within the Juneau Downtown Historic District, which encourages construction at the front and side property lines. The conflict between these guidelines creates a site-specific hardship if zoning setback requirements are applied. The requested Variance meets the criteria of CBJ Section 49.20.250(b)(1).

STAFF RECOMMENDATION
Staff recommends the Planning Commission adopt the Director's analysis and findings and grant Variance VAR2025 0008.

3. **VAR2025 0009: Applicant requests a Non-Administrative Variance to extend the Waterfront Commercial height limit from 35 feet to 38 feet, and from 35 feet to 54 feet for an area of 5,800 square-feet to accommodate a flying theater. — APPROVED AS RECOMMENDED**

Applicant: Reuben Willis
Location: 356 South Franklin Street

DIRECTOR'S REPORT
The proposed building includes three theater attractions, a retail space, and associated office and support areas. The property is immediately adjacent to a CBJ-owned parking garage that exceeds the surrounding height limit. When Historic District boundaries were adopted in 2013, the parking garage parcel was intentionally excluded from the district. As a result, adjacent properties that function together visually and physically are subject to

different height standards. The requested Variance with conditions meets the criteria of CBJ Section 49.20.250(b)(1).

STAFF RECOMMENDATION

Staff recommends the Planning Commission adopt the Director's analysis and findings and grant Variance VAR2025 0009 with the requested conditions.

K. OTHER BUSINESS

1. Discussion of Regular Meeting Times

L. STAFF REPORTS

M. COMMITTEE REPORTS

N. LIAISON REPORT

O. CONTINUATION OF PUBLIC PARTICIPATION ON NON-AGENDA ITEMS

P. PLANNING COMMISSION COMMENTS AND QUESTIONS

Q. EXECUTIVE SESSION

R. SUPPLEMENTAL MATERIALS

1. Additional Materials

S. ADJOURNMENT

ADA accommodations available upon request: Please contact the Clerk's Office 36 hours prior to any meeting so arrangements can be made for closed captioning or sign language interpreter services depending on the meeting format. The Clerk's Office telephone number is (907) 586-5278, e-mail: city.clerk@juneau.gov.

DRAFT MINUTES

Agenda
Planning Commission
Regular Meeting
CITY AND BOROUGH OF JUNEAU
Erik Pedersen, Chair
January 13, 2026

A. LAND ACKNOWLEDGEMENT – Read by Ms. Rintala

We would like to acknowledge that the City and Borough of Juneau is on Tlingit land, and wish to honor the indigenous people of this land. For more than ten thousand years, Alaska Native people have been and continue to be integral to the well-being of our community. We are grateful to be in this place, a part of this community, and to honor the culture, traditions, and resilience of the Tlingit people. Gunalchéesh!

B. ROLL CALL

Erik Pedersen, Chair, called the Regular Meeting of the City and Borough of Juneau (CBJ) Planning Commission (PC), held in Assembly Chambers of the Municipal Building, virtually via Zoom Webinar, and telephonically, to order at 6 p.m.

Commissioners present: Commissioners present in Chambers –Erik Pedersen, Chair; Lacey Derr, Vice Chair; Mandy Cole, Clerk; Jessalynn Rintala, Vice Clerk; Douglas Salik; Larry Gamez; Carlee Simon; Keith Koruna; Karinne Wiebold

Commissioners present via video conferencing – None

Commissioners absent:

Staff present: Scott Ciambor, CDD Planning Manager; Forrest Courtney, Senior Planner; Madeline Carse, CDD Administrative Assistant; Nicole Lynch, Attorney III; Emily Wright, Municipal Attorney

Assembly members: None

C. REQUEST FOR AGENDA CHANGES AND APPROVAL OF AGENDA

D. APPROVAL OF MINUTES

1. November 18, 2025, Draft Minutes, Regular Planning Commission

MOTION: *by Ms. Cole to approve the November 18, 2025 Planning Commission Regular Meeting minutes. The motion passed.*

E. BRIEF REVIEW OF THE RULES FOR PUBLIC PARTICIPATION

F. PUBLIC PARTICIPATION ON NON-AGENDA ITEMS

G. ITEMS FOR RECONSIDERATION

H. CONSENT AGENDA

I. UNFINISHED BUSINESS

J. REGULAR AGENDA

K. OTHER BUSINESS

1. CDD Overview

Scott Ciambor, CDD Planning Manager, gave an overview of the Community Development Department. He talked about all the new things they have going on in CDD and the joint meeting they would be having with the Assembly tomorrow. He shared that the biggest and most important project the department worked on for the last year was getting to the point to actively go live on their new permitting software. He went over the organization chart of the CDD, Administration Division, Permit Center Hub (PCH), Building Division, and current Planning Division.

Ms. Derr asked if there was anything the commission could do to help fill the vacancies and help keep positions.

Mr. Ciambor responded that a lot of organizations have difficulties hiring and keeping people. He shared that he has been the Planning Manager for four years and has cycled through 25 planners. He said the best thing anyone in the community can do to help them maintain staff is to be really supportive of the work they do and promote positions if they come available. He expressed that the staff they have now is capable, dynamic, and getting a lot of big projects through that were on the docket for years.

Ms. Rintala thanked staff for implementing the new permit software. She added that she did an email and text blast on the upcoming Comp Plan and interactive activities.

Chair Pedersen asked if the hope of the permit software was to reduce some workload because of the interactive way the information is input.

Mr. Ciambor answered that it will streamline the process on the applicant's side and internally. He stated they still have a lot of work to do regarding closing out or reassign old cases.

Ms. Cole inquired if they envision starting out in the portal or if they still would need to call the office, set up a pre-app conference, and then transition to the portal.

Mr. Ciambor responded that they will be doing everything in the portal.

Mr. Gamez thanked Mr. Ciambor for all the work he has done for their community, especially the development of the IT stuff they are going to be using.

Mr. Ciambor accepted that compliment and deflected it to the staff, as a lot of CDD staff that do not get a lot of visible time do a lot of that work. He expressed that it was Irene Gallion, Senior Planner, last day, and thanked her for how she handled her roles at CDD and in the manager's office, and said he holds her work in high regard.

2. Role of Commission

Mr. Ciambor went over the role of the Planning Commission. He reminded the Commission that their duties are already listed in Title 49 for reference. In regard to the Comprehensive Plan, he said it would be helpful to the planners for the commissioners to pay attention throughout the process by participating and being well-read and well-versed instead of waiting for the final product. He recommended checking in, asking questions at meetings, and asking for regular updates, so they are comfortable enough knowing that the public input, process, and expertise was put in to give them a good product. He also talked about philosophy and approach of the Planning Commission.

3. Annual Commissioner Training

Nicole Lynch, Attorney III, first discussed the Open Meetings Act, which require that all government meetings be open to the public and that the public must have notice of the meetings.

Ms. Cole asked a about proper notice for canceling and rescheduling meetings.

Attorney Lynch responded that it depends on the topic of the meeting. She explained that for Planning Commission Meetings, since they are cases coming before the Commission, the applicant has a right to a 30 days' notice before their hearing, but other meetings, such as a subcommittee meeting, they can sometimes get away with a 24 hours' notice depending on the board. She added that they strive for most of their boards to do a week notice.

Attorney Lynch voiced that under OMA, the public has to be given a reasonable opportunity to be heard at all regular and special meetings, and a meeting considered under OMA is any time there is more than three members together and any time they are discussing an issue that the Board has the authority to act on. She noted that if they do not have a quorum, they cannot have a meeting, and five members must be present to conduct business. She stated that if any action is taken in violation of the OMA, it is voidable and may have to be redone. She expressed that one exception to the OMA is an Executive Session, where the public is excluded. She also shared tips to help keep things in line under the OMA.

Chair Pedersen asked Ms. Lynch to further explain the threshold of three members for what constitutes a meeting versus what does not constitute a meeting.

Attorney Lynch explained that it states if there is more than three, so if there is just three, they are fine; however, when there is more than three, they are then in meeting territory. She urged them to be cognizant of that when having discussions.

Ms. Wiebold asked if any time they are together is considered a meeting.

Attorney Lynch explained technically yes, because they consider perception. She added that the key is to not cluster in groups of more than three and not discuss anything the body would be making decisions on.

Chair Pedersen asked for clarification that if three commissioners discuss one item that is on the agenda, one of those commissioners has the ability to discuss with separate commissioners regarding an additional case.

Attorney Lynch responded that is true. She said the goal is keeping it under three and having those discussions in public.

Attorney Lynch discussed conflict of interest, which states they may not deliberate or vote on any matter in which they have a conflict, focusing on personal or financial gain and the appearance of impropriety. She commented that when it doubt of conflict on an issue, declare it with the board. She noted they can also contact the law department beforehand and ask for guidance on that. She explained that if they indicate they can be fair or impartial, the chair will decide on whether they can participate in the vote, but if any member of the body disagrees with the chair, they

will call for a roll vote. If it is decided they cannot be fair or impartial, they must remove themselves from the dais during that discussion and vote.

Ms. Cole asked if it was necessary to ask if the public has any objections to a person remaining on the dais.

Attorney Lynch answered no.

Ms. Wiebold inquired if they have a conflict but still felt compelled to testify, could they still do so as a member of the public.

Attorney Lynch responded yes, but they would need to state they are presenting their personal opinions and not acting as a commissioner.

4. NFIP Overview for the Planning Commission

Emily Wright, Municipal Attorney, gave an overview of the National Flood Insurance Program (NFIP) for the Planning Commission. She expressed that with the increase in the glacier outburst flooding, the Planning Commission has had an increased role. She explained that the CDD Department runs the NFIP Program, and as part of that, they make sure all the land code requirements are followed, but in an emergency there is an exception built into the flood plain program that allows homeowners and the City and Borough of Juneau to come to the Planning Commission and ask for an exception. She shared that as the GLOF has increased and evolved, these exceptions are very common and recommended they focus on the proposed findings to help them make their decision. She added they plan on seeing this every year until they have a solution.

Ms. Cole commented she was under the impression that exceptions, particularly the one they heard last spring, was because of not having enough time to implement according to their version of the NFIP. She asked how exceptions happen year after year if there is a timing element to them.

Attorney Wright responded that they can come to them ahead of time, if there are known exceptions, or they can get exception requests for things that have already happened or happened very rapidly. She said they hope that as they get better modeling for the river, they will have less after-the-fact exception requests.

Mr. Gamez asked for an example of a request from a homeowner.

Attorney Wright answered that a lot of the ones they saw last year had to do with the riprap along the river.

5. Officer Assignments

Ms. Cole shared they had a previous conversation on these, and agreed to nominate Chair Pedersen to remain Chair, Commissioner Derr remain Vice Chair, Ms. Cole to take up the clerk position, and Ms. Rintala take up the Vice Clerk position.

MOTION: *by Ms. Cole to nominate Chair Pedersen to remain Chair, Commissioner Derr remain Vice Chair, Ms. Cole as the Clerk, and Ms. Rintala as the Vice Clerk.*

Ms. Simon asked for an explanation of those positions and their responsibilities for future knowledge.

Ms. Cole explained the Commission Chair, Commission Vice Chair, Clerk, and Vice Clerk roles.

Chair Pedersen encouraged the new commissioners to review Robert's Rules. He added that officer assignments can be changed at any time.

The motion passed.

L. STAFF REPORTS

Mr. Ciambor stated that there will be other sessions available later in the month for the Juneau Futures Meeting tomorrow night for those that cannot make it.

Ms. Cole asked if there would be a moment for a more personal discussion between them and the Assembly like they usually have at tomorrow's meeting or if that would be scheduled at a later date.

Mr. Ciambor understood that the focus would be the Juneau Futures Workshop, but they can schedule another meeting to discuss goals and expectations for the year.

M. COMMITTEE REPORTS

Chair Pedersen reported that the Title 49 Rewrite Committee met last week, but did not make any decisions at the meeting.

N. LIAISON REPORTS

O. CONTINUATION OF PUBLIC PARTICIPATION ON NON-AGENDA ITEMS

P. PLANNING COMMISSION COMMENTS AND QUESTIONS

Q. EXECUTIVE SESSION

R. ADJOURNMENT

The January 13, 2026 Planning Commission Meeting was adjourned at 7:03 p.m.

DRAFT MINUTES

Agenda
Planning Commission
Regular Meeting
CITY AND BOROUGH OF JUNEAU
Erik Pedersen, Chair
January 27, 2026

A. LAND ACKNOWLEDGEMENT – Read by Ms. Derr

We would like to acknowledge that the City and Borough of Juneau is on Tlingit land, and wish to honor the indigenous people of this land. For more than ten thousand years, Alaska Native people have been and continue to be integral to the well-being of our community. We are grateful to be in this place, a part of this community, and to honor the culture, traditions, and resilience of the Tlingit people. Gunalchéesh!

B. ROLL CALL

Erik Pedersen, Chair, called the Regular Meeting of the City and Borough of Juneau (CBJ) Planning Commission (PC), held in Assembly Chambers of the Municipal Building, virtually via Zoom Webinar, and telephonically, to order at 6 p.m.

Commissioners present:	Commissioners present in Chambers –Erik Pedersen, Chair; Lacey Derr, Vice Chair; Mandy Cole, Clerk; Jessalynn Rintala, Vice Clerk; Douglas Salik; Larry Gamez; Carlee Simon; Keith Koruna; Karinne Wiebold
Commissioners absent:	None
Staff present:	Jill Lawhorne, CDD Director; Madeline Carse, CDD Administrative Assistant; Nicole Lynch, Attorney III; Justin Smith, Planner I; Brandon Robinson, Planner II; Kathryn Oberlin, Planner I
Assembly members:	Greg Smith

C. REQUEST FOR AGENDA CHANGES AND APPROVAL OF AGENDA

D. APPROVAL OF MINUTES
None

E. BRIEF REVIEW OF THE RULES FOR PUBLIC PARTICIPATION

F. PUBLIC PARTICIPATION ON NON-AGENDA ITEMS

G. ITEMS FOR RECONSIDERATION

H. CONSENT AGENDA

1. **MLG2025 0001:** Applicant requests Summary Approval for an extension of the Tailings Disposal Facility (TDF) at Greens Creek Mine.
   Applicant: HELCA Greens Creek Mining Company
   Location: Admiralty Island

Director's Report

The Applicant requests a Summary Approval for an extension of the Tailings Disposal Facility (TDF) at Greens Creek Mine. The Greens Creek Mine Tailings Disposal Facility extension project has gone through a strict environmental review process and received a Final Record of Decision from the US Forest Service. Greens Creek Mine is approximately 18 miles outside the CBJ Road Service Area and meets the requirements of Summary Approval under CBJ 49.65.170(b)(2)(A).

Staff Recommendation

Staff recommends the Planning Commission GRANT the Summary Approval for case MLG2025 0001.

2. **CSP2025 0002:** Replacement of Pump Station at Cope Park.
   Applicant: City and Borough of Juneau
   Location: Cope Park

Director's Report

The applicant requests a City Project Review for replacement of the water utility pump station at Cope Park, upgrades to underground piping and valves, and installation of new curb, gutter, and pavement. The Cope Park water pump station provides potable water service to higher-elevation areas of downtown Juneau. The existing pump station is nearing the end of its service life and requires replacement, according to the application packet. The proposed project complies with Title 49 of the CBJ Land Use Code and is in general conformity with adopted plans, including the 2013 Comprehensive Plan.

Staff Recommendation

Staff recommends the Planning Commission adopt the Director's analysis and findings and forward a recommendation of APPROVAL of CSP2025 0002 to the Assembly.

3. **USE2025 0011:** A proposal for a Conditional Use Permit for a vehicle-repair garage in a GC zone
   Applicant: David Moe
   Location: North Douglas Hwy

Director's Report

The applicant requests a Conditional Use Permit to construct a vehicle-repair garage in a General Commercial zone. Motor vehicle repair and maintenance, including body work, is an allowable use (CBJ 49.25.300, Use 9.100) via the conditional-use process in the General Commercial (GC) zoning district.

Staff Recommendation

Staff recommends the Planning Commission adopt the Director's analysis and findings and APPROVE Conditional Use Permit USE2025 0011 with the requested conditions.

MOTION: *by Ms. Derr to accept staff's findings, analysis, and recommendations, and approve MLG2025 0001, USE2025 0011 and forward a recommendation of approval of CSP2025 0002 to the Assembly.*

The motion passed.

I. UNFINISHED BUSINESS

J. REGULAR AGENDA

1. **PAD2025 0001:** Applicant requests a Property Disposal Review for the purchase of approximately one (1) acre of City & Borough of Juneau-owned land.
   Applicant: Mark Sams
   Location: Mendenhall Peninsula Road

Director's Report

The applicant requests a Property Disposal Review for the purchase of approximately one (1) acre of City & Borough of Juneau-owned land adjacent to his property at 1110 Mendenhall Peninsula Road. The applicant would use the acquired property to construct a 24-foot by 40-foot addition to his existing home with an attached deck. The proposed land disposal is in general conformity with the 2013 Comprehensive Plan and the 2016 CBJ Land Management Plan and has a motion of support from the Assembly Lands Housing & Economic Development (LHED) Committee to go to the full Assembly for review.

Staff Recommendation

Staff recommends the Planning Commission adopt the Director's analysis and findings and forward a recommendation of APPROVAL of PAD2025 0001 to the Assembly.

Director Lawhorne gave an overview of what the city process looks like.

Ms. Cole asked if it was atypical that this went to Lands before the Planning Commission.

Director Lawhorne responded it is typical for it to go to Lands, back to the Planning Commission, and then back to the Assembly.

Ms. Simon asked what the fair market value process composed of and how it worked.

Director Lawhorne answered at a very high level, and is based on appraisals, not assess value. She noted the city can only sell land at fair market value unless it is for public use or benefit.

Ms. Derr inquired on how these parcels are available to sell and why it was not logical to sell this to someone else, as it stated in the material.

Director Lawhorne responded it is case dependent, and the way the city property was located, the topography, and the steepness of it in this instance, they did not have a lot of uses for it. She said because the adjacent property owner had their legal frontage, they could use it. She added that for CBJ land in general, anyone can speak to the Lands Division and see what is available and go through the process, but they do work with adjacent property owners often.

Ms. Derr asked if another member of the public would have the opportunity to outbid Mr. Sams.

Director Lawhorne expressed that if anyone interceded and wanted to interject, they could speak at the meeting tonight, but it would normally be at the Assembly level to hear various interests in properties. She explained that this made the most sense, met Assembly goals, and followed the Comprehensive Plan.

Ms. Wiebold commented this looks to be in the rural reserve, which is one house per lot, but the area is an urban low density area and could potentially accommodate many more units. She asked would have to happen if Mr. Sams bought the extra acre and put more units on it.

Director Lawhorne responded that rural reserve is similar to the D1 Zoning District, with one unit per acre, and an accessory dwelling unit does not count towards density, but depending on if the lots size is large enough, there may be room to have two single family dwelling, each having an ADU. However, to have multifamily or more units, it would likely take a rezone application, go through the Planning Commission process, and meet compliance with the Comprehensive Plans, as well as any other adopted plans.

Chair Pedersen asked for clarification that if the applicant went through with the property disposal, they would have no obligation to complete additional dwelling units or develop the property further in any way.

Director Lawhorne confirmed that is correct.

Ms. Cole pointed out that on page 547 of the packet, there is a picture marked disposal map from application that includes a small area called future access. She asked if CBJ owned that lot.

Chair Pedersen suggested letting staff look up information on that while they hear from the applicant. He invited the applicant up to provide testimony or a presentation.

Mark Sams, applicant, thanked to the Commission and CBJ for reviewing the petition. He explained that he and his wife purchased the property in 2021 and built an apartment with a garage so they could move in while they planned a future home, but since that time their family has grown and they started to run out of space. He stated that they wanted to do an addition instead of doing a standalone structure, which brought on going through the Lands process. He noted that this is not the first time someone has asked to dispose of land on Mendenhall Peninsula, and as they have gone through looking at the addition, there are some advantages to the property by doing it, including limiting the visual impact from the street, allowing them to be more efficient with their current structure, and increasing flexibility in moving around the property. He added the strip of land adjacent to his is a CBJ property that was planned for future access to the overall bigger area above his property. Mr. Sams expressed they are not interested in subdividing in the future and not interested in bringing renters onto their site.

Chair Pedersen asked the commissioner for questions for the applicant.

Ms. Derr understood that they cannot go downhill due to a septic system, but asked why they cannot go forward with any of the property.

Mr. Sams responded that making the structure longer would be a redesign of the existing driveway and limit the ability for them to maneuver their boat around at the top of the property.

Ms. Rintala stated that in the comments from the public, they received drainage issue concerns. She asked Mr. Sams for his read on drainage issues in the area.

Mr. Sams answered that currently there are drainage ditches around the lot, which intercept a significant amount of water. His said there does not appear to be any overflow occurring this year, but if there are any issues with that, he intends to remedy it.

Chair Pedersen asked for public comment.

Donna Meiners, 1120 Mendenhall Peninsula Road, expressed that Mr. Sams reported having a legal easement on her lot for driveway and access, and if they extend his lot by 1 acre, it will also legally extend that easement. She stated that the Sams family has two cars, a truck, and boat,

and future homeowners will also likely have multiple vehicles. She was not emotionally prepared to tolerate the construction traffic of a remodel and future home build and added daily traffic of multiple vehicles through her side yard. She voiced that since she could not have foreseen, anticipated, or planned for this extend access, she should not be forced by this land sale to accept this easement extension, as it is an unfair and unreasonable burden. She shared that she was concerned about drainage and submitted a letter of concern to CBJ but there was no follow up. She said that any extension of additional land to that lot will complicate the already overloaded natural flowage towards the main road, and she objected to special treatment for any landowner.

Ms. Cole asked how the easement would in any way change, as the easement in her lot would still terminate in Mr. Sams original lot.

Ms. Meiners responded it would extend through that whole acre and if there is housing and vehicles there, they would come down through her property to get to Mendenhall Peninsula Road, which would be traffic going through her side yard.

Ms. Wiebold asked Ms. Meiners if after hearing this process if she felt empowered to go through the Land Disposal process in a similar way.

Ms. Meiners stated the reasoning for allowing Mr. Sams to buy this was that he already has driveway access from his property all the way down to Mendenhall Peninsula Road, but he is creating his own 1-acre parcel to his own specifications. She expressed if that land is for future development, she would be interested in purchasing that lot or lots up there and do it now and save it for her grandchildren.

Mac Meiners, 1120 Mendenhall Peninsula Road, expressed when he purchased his property, he put in a lot of work to make sure his property drains properly and did it right, but Mr. Sams came along and permitted a caretaker's house so he could build a boat shed and live upstairs. He said he did not do any excavation work and his driveway sits fallow. Mr. Meiners says he lost about 90 feet of his lot because of the access. He opposed Mr. Sams from getting the lot, because he has enough land to do whatever he wants. He noted that he put his house in the wrong spot and put the sewer right above his house, where he was able to smell sewer gas last summer. He felt Mr. Sams was not a very good steward of the land.

Rosemary Matt, 1100 Mendenhall Peninsula, voiced there was a small drainage problem that blossomed into a small glacier that is about 50 feet long, 15 feet wide, and 4 inches thick in some places, which went across the whole front of their access to the shared driveway.

Ms. Wiebold inquired if the drainage was addressed adequately, would she still have any objections to the sale.

Ms. Matt answered she would be happy, but drainage is an issue and they will be out there in the spring looking to see what needs to be done.

Chair Pedersen closed public testimony and offered the applicant to come back up and add testimony or comments. The applicant declined.

Chair Pedersen asked the commissioners for questions of staff.

Ms. Wiebold commented she was surprised to learn CBJ owned this land and that it was available for disposition, and imagined she was not the only one surprised by that. She asked how they could let people know this is an option.

Director Lawhorne responded that Mr. Bleidorn tries to get the message out there frequently and would talk to him more about it. She mentioned that the Lands Management Plan may be coming up for an update, which would bring light to it and would include public engagement. She shared they are always open to ideas on how to reach out to the public more.

Mr. Gamez inquired if there was a public notice sign on the roadway for information when the city sells property.

Director Lawhorne answered yes, they have the notice sign they do for public hearings.

Ms. Derr asked if this was a real caretaker unit or a single family dwelling.

Director Lawhorne responded there is common terminology out there that may not directly correspond with their Land Use Code, but per the code, a caretaker unit is very specific, stating it is a unit in an industrial zone meant to be the caretaker for that industrial use.

Mr. Salik asked for clarification that this is a land use sale, and that drainage concerns would be addressed when they go to obtain a building permit.

Director Lawhorne agreed that is correct. She noted that public comment and concern about the drainage is taken seriously and likely the Assembly would make note to appoint the applicant work on those issues and care for them.

Mr. Salik inquired if the applicant were allowed to purchase the land, would anything prohibit them from adjusting the hydrologics of the land so potential further water could not come down and harm other homeowners.

Chair Pedersen voiced if the applicant was legally changing the configuration of the topography of the land, they would need a grading permit, and there is a threshold that triggers that.

Ms. Cole shared she had sympathy for the applicant's desire to get abutting land and currently there is no road to the land, but there is land slated, owned by CBJ, and determined to be future access. She said it does not have a road on it now but road eligible, so she was not 100% sure of it is landlocked if they already have a parcel delineated as future access in their own maps.

Director Lawhorne responded there is a site plan survey showing the right-of-way, which is an unconstructed, platted right-of-way to the property, but it is quite steep and not likely to be constructed by CBJ, as the land above is also steep. She understood the comments about the access, but Mr. Sams' property is what has legal access to the right-of-way for all three properties.

Chair Pedersen opened the floor to Planning Commission discussion.

Ms. Wiebold stated the structure is only a couple of years old. She asked why the issues were not addressed when the structure was initially constructed.

Director Lawhornoe did not know the answer to that, but could look into it.

Ms. Wiebold inquired if it is normal that drainage is addressed during the permitting process.

Director Lawhorne answered that General Engineering reviews grading permits.

Ms. Derr commented that she has seen land sales in her time on the Planning Commission, but has not felt this level of uncomfortability with the fact that this may be a landlocked parcel; however, there is CBJ access. She felt the land sale should have the ability to be open to any CBJ resident with the desire to purchase it. She understood Mr. Sams wanting to extend his footprint and he has the ability to do so on his land, but they would have potentially said no to the variances on this case, as there is ability on the land to be able to extend. She was leaning towards a recommendation of no, but appreciated additional Commission comments.

Ms. Rintala shared the lens that they look through in many decisions is the need for housing in Juneau, as they are in a housing crisis. She said this is in conformity with the Land Management Plan, Comprehensive Plan, and the housing situation in Juneau, as well as the applicant being particularly well-suited to develop this particular parcel of land. She was inclined to vote in favor.

Mr. Koruna disclosed a potential conflict of interest, as he has had professional dealings with the applicant and some of the commentators in the past. However, he believed he could be fair and impartial and did not have any financial interest in the project.

Chair Pedersen asked if any commissioners felt Mr. Koruna could not be impartial and should be recused.

Director Lawhorne suggested a recess so Mr. Koruna could confer with Attorney Lynch.

[Recess]

Mr. Koruna expressed that after discussion with Attorney Lynch, there was no conflict.

Chair Pedersen asked if they were to prove this land disposal, would they have the ability to condition it on the applicant providing a drainage plan or grading permit.

Director Lawhorne answered they could not condition it, but could make findings that there is a concern for drainage in the area and would advise that it is addressed.

Ms. Simon inquired if the buyer would bring the appraisal or if the city would do an appraisal, and if they would do a few appraisals and take the average.

Attorney Lynch responded the city gets one appraisal and usually use that for fair market value.

Ms. Cole was moved by the idea there is access to this land that could potentially be platted and sold for a development that would put it to its highest and best use, which would serve the goal of housing better than creating one very large 1-acre lot. However, the city has clearly stated they have no future plans due to the zoning and topography to develop the access road in the foreseeable future. She expressed there is a planned access and they could develop that land, not as a single acre addition to someone's property, and provide a significant amount of housing to Juneau, but that is unrealistic. She was in support of recommending this sale.

Ms. Simon asked for clarification they are voting the property will be able to be purchased, but another buyer come along in this process, and are not just opening this up for this applicant.

Director Lawhorne expressed that at the moment, this has been opened up for this applicant, as they reached out to the city to start this process. She noted that anyone can look at the Land Management Plan online, and if they are interested in a property, she encouraged them to reach out to Mr. Bleidorn in the Lands Division.

Ms. Wiebold voiced one of her concerns is that there is not new housing being created, and was not sure how that met the new housing criteria. She was intrigued by seeing the right-of-way and the possibility with the CBJ land of future development. She understood the difficultly of working with steep topography and the cost associated with building roads, but hoped they did not make decisions that limit their choices in the future should they look to develop that land.

Director Lawhorne shared that Mr. Bleidorn did not have concerns with this one, as that right-of-way is incredibly steep, especially in the midpoint, and the property up above is wet.

MOTION: *by Ms. Derr to accept staff's findings, analysis, and recommendations, and forward a recommendation of approval of PAD2025 0001 to the Assembly, with an additional finding from the Planning Commission that drainage needs to be addressed.*

The motion passed 6-3.

K. OTHER BUSINESS

L. STAFF REPORTS

Director Lawhorne reported that Civic Access, their new permit software system, went live on January 12th, and has been great for the public. She noted there were some hiccups that need to be worked out, but has been a huge success and they expect to be fully up and have everything worked out in 6-12 months. She said Phase 2 of the Comprehensive Plan has also gone well, and they will kick off the last phase, Phase 3, this summer. She added that scenario planning has gone over incredibly well with the public and thanked those that participated with the Assembly in the scenario planning game. She shared the goal is to come before the Commission every few months with an update. She announced the February 10th Meeting was cancelled, but several cases are lined up for February 27th Meeting.

M. COMMITTEE REPORTS

Mr. Gamez participated with Public Works and the Assembly at the lunchtime meeting, where they talked about draft FY2027 Capital Improvements, projects and schedules with Public Works, utility rate increases for the Roads and Street Projects, large discussions on the snow-pocalypse from December, brief discussion on micro transits and on-demand transits, and an update from Scott Gray, Fleet Maintenance Superintendent. Mr. Gamez took his hat off to Scott Gray, all the equipment operators, and Public Works staff that worked so hard removing all the snow from the community.

Ms. Derr shared that the Lands Housing and Economic Development Committee met last night. She said there is a section of land at the end of John Street, the Douglas Island Development, where they are looking to expand a parcel recommended to be disposed of. She noted there was discussion that just because the land is disposed of, they will still have to do all the process of permitting, consolidating, and zoning. She stated there was also discussion regarding the cellular infrastructure at Diamond Park, where the cellular company will be responsible for their infrastructure and CBJ will be responsible for their light pole and infrastructure. They also discussed tourism best management practices and the upcoming tour season.

Ms. Rintala gave an update on the Comprehensive Plan Update Committee. She thanked CBJ staff and the public who were there. She was excited to see the data that comes out of that, as it should yield some cool information for them to think about going forward.

Ms. Wiebold attended the Devils Club Public Meeting, which was a blast. She felt the venue was a good selection and staff was amazing.

Chair Pedersen shared there is one advisory board they do not have a liaison for, which is JCOS, Juneau Commission on Sustainability. He asked for a commissioner not currently on a committee to think about it and if no one volunteers, they will choose someone.

N. LIAISON REPORTS

Greg Smith thanked the Commission for their work and apologized for missing the last meeting. He shared he was able to attend one of the visioning workshops, along with Commissioner Rintala and Commissioner Wiebold, and he gave big kudos to staff for their work. He said he has taken it upon himself to try to keep the Assembly updated on the Comprehensive Plan process. He stated that last night, the Committee of the Whole moved the West Juneau Downtown Douglas Area Plan back to the Full Assembly. They also approved Legislative Capital Priorities, met with the General Legislative Delegation and federal state lobbyists last week, worked on Assembly goals, ran through the new ones, and will be adopting those at the February 9th Regular Assembly Meeting. He expressed that he is the chair of the Title 49 Advisory Committee and they met earlier this month to look at possible flexes in certain things.

O. CONTINUATION OF PUBLIC PARTICIPATION ON NON-AGENDA ITEMS

P. PLANNING COMMISSION COMMENTS AND QUESTIONS

The Commissioners gave introductions and provided insight into why different members of the Commission have different experiences.

Q. EXECUTIVE SESSION

R. SUPPLEMENTAL MATERIALS

1. **Additional Materials**

S. ADJOURNMENT

The January 27, 2026 Planning Commission Meeting was adjourned at 8:01 p.m.

CITY AND BOROUGH OF JUNEAU
ALASKA'S CAPITAL CITY
COMMUNITY DEVELOPMENT

PLANNING COMMISSION STAFF REPORT
CONDITIONAL USE PERMIT USE2025 0013
HEARING DATE: FEBRUARY 24, 2026

(907) 586-0715
CDD_Admin@juneau.gov
www.juneau.org/community-development
155 Heritage Way • Juneau, AK 99801

DATE: February 12, 2026

TO: Erik Pedersen, Chair, Planning Commission

BY: Justin Smith, Planner

THROUGH: Jill Lawhorne, Director, AICP

PROPOSAL: Applicant requests a Conditional Use Permit to construct a 38,000-square foot entertainment and retail building at 356 South Franklin Street in a Waterfront Commercial zone.

STAFF RECOMMENDATION: Approval with conditions

KEY CONSIDERATIONS FOR REVIEW:

- The lot is zoned Waterfront Commercial, and the first 40 feet of the property lies within the Juneau Downtown Historic District.
- The proposed use is permissible with a conditional use permit process in the Waterfront Commercial zone.

GENERAL INFORMATION	
Property Owner	Archipelago Properties LLC
Applicant	Reuben Willis
Property Address	356 S Franklin St
Legal Description	ARCHIPELAGO LT 1A
Parcel Number	1C070K830022
Zoning	Waterfront Commercial (WC)
Land Use Designation	Marine Commercial (MC)
Lot Size	33,875 square feet
Water/Sewer	CBJ/CBJ
Access	S. Franklin St.
Existing Land Use	Vacant
Associated Applications	VAR2025 0008 and VAR2025 0009

ALTERNATIVE ACTIONS:

1. **Amend:** require additional conditions or delete or modify the recommended conditions.
2. **Deny:** deny the permit and adopt new findings for items 1-6 below that support the denial.
3. **Continue:** to a future meeting date if determined that additional information or analysis is needed to make a decision, or if additional testimony is warranted.

ASSEMBLY ACTION REQUIRED:

Assembly action is not required for this permit.

STANDARD OF REVIEW:

- Quasi-judicial decision
- Requires five (5) affirmative votes for approval
- Code Provisions:
  - 49.15.330
  - 49.80

The Commission shall hear and decide the case per *49.15.330(a) Conditional Use Permit.* *A conditional use is a use that may or may not be appropriate in a particular zoning district according to the character, intensity, or size of that or surrounding uses. The conditional use permit procedures is intended to afford the commission the flexibility necessary to make determinations appropriate to individual sites. The commission may attach to the permit those conditions listed in subsection (g) of this section as well as any further conditions necessary to mitigate external adverse impacts. If the commission determines that these impacts cannot be satisfactorily overcome, the permit shall be denied.*

SITE FEATURES AND ZONING

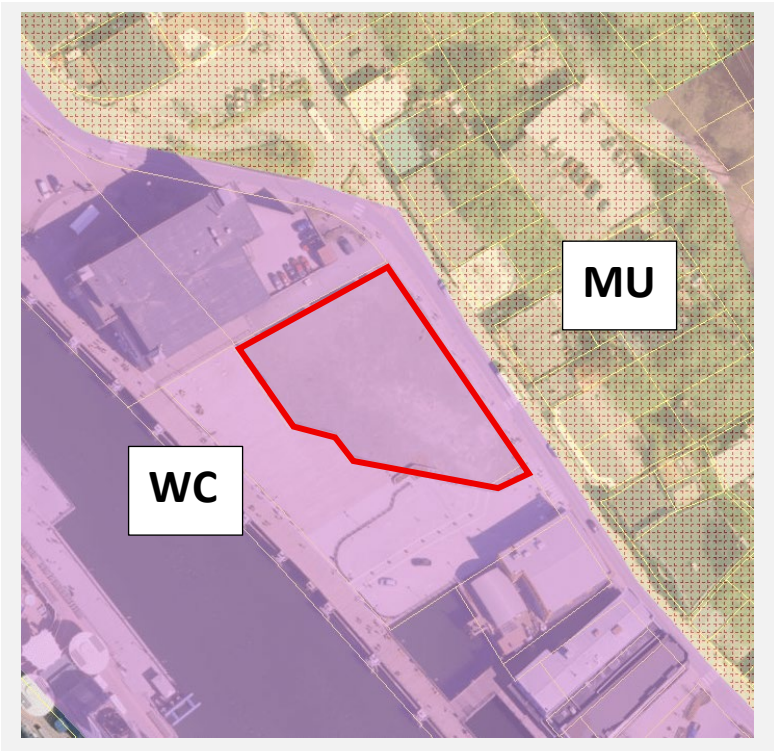

SURROUNDING ZONING AND LAND USES	
North (MU)	Commercial/Mixed Use
South (WC)	Seawalk
East (MU)	Commercial/Mixed Use
West (WC)	Downtown Library and Parking Garage

SITE FEATURES	
Anadromous	No
Flood Zone	Panel 02110C1567E: Zone VE
Hazard	No
Hillside	No
Wetlands	No
Parking District	No Parking Required Area
Historic District	Lot is partially within the Juneau Downtown Historic District
Overlay Districts	Cruise Ship Berthing and Lightering District Overlay

BACKGROUND INFORMATION

Project Description – The applicant requests a Conditional Use Permit, USE2025-0013, to construct a new entertainment and retail building containing three theater attractions, a retail space, and associated office and support areas in a Waterfront Commercial zoning district (**Attachment A**). The proposed building is approximately 38,000 square feet and includes a lobby and an open-air plaza on the east side of the lot. The property is adjacent to the downtown library and parking garage, the sea walk, and the city-owned bus staging lot.

The proposed entertainment uses include a 60-person 4D theater, a 72-person flying theater, and three 20-person Ocean 360 rides. A ticket counter is proposed within the lobby to direct visitors throughout the building. A mezzanine level is proposed to accommodate back-of-house uses, including office and storage space.

The first 40 feet of the property lies within the Juneau Downtown Historic District, as shown in **Attachment B**. As a result, review of the proposal includes consideration of the Downtown Historic District Design Standards and Guidelines in the following section. The property is also within the No Parking Required Area (**Attachment H**).

The applicant has also requested two Variances associated with the project. VAR2025-0008 requests a reduction of the west side yard setback from 10 feet to 0 feet for a length of 60 feet within the Waterfront Commercial zone. VAR2025-0009 requests an increase to the Waterfront Commercial height limit from 35 feet to 38 feet, and from 35 feet to 54 feet for a 5,800-square-foot portion of the building to accommodate the flying theater. The Director recommends approval of both variances.

Background – The property is the former site of the Juneau Cold Storage building, which was destroyed by fire in the 1980s. Since that time, the property has remained largely vacant, with intermittent use for seasonal food and retail operations.

The current lot, Archipelago Lot 1A, was approved in May 2019 as Plat 2019-19 (**Attachment C**). A Conditional Use Permit, USE2019-0021, application for two (2) two-story commercial mixed-use buildings was approved by the Planning Commission on January 21, 2020 (**Attachment D**). A subsequent variance request, VAR2019-0005, to reduce the parking requirement to zero in association with USE2019-0021 was denied by the Board of Adjustment following hearings on January 28, 2020, and February 4, 2020 (**Attachment E**).

BLD2019-0145 was a grading permit issued on April 12, 2019, for site improvements (**Attachment F**). The permit was issued but was never finaled.

BLD2019-0321, titled Downtown Waterfront Improvements – Phase 1, was issued on July 12, 2019, and was managed by CBJ Docks and Harbors. The work included improvements in the surrounding area, including portions of the applicant's lot (**Attachment G**). This permit was also issued but never finaled.

The table below summarizes relevant history for the lot and proposed development.

Date	Item	Summary
2013	Juneau Downtown Historic District Map	Adopted in 2013, this map shows the Juneau Downtown Historic District. This district is subject to the Downtown Historic District Design Standards and Guidelines. (**Attachment B**)
2019	Plat 2019-19	The plat of the applicant's lot, Archipelago Lot 1A. (**Attachment C**)
2019	USE2019 0021	A conditional use permit for two (2) two-story commercial mixed-use buildings on Archipelago Lot 1A. The conditional use permit was approved by the Planning Commission on January 21, 2020. (**Attachment D**)
2019	VAR2019 0005	A variance connected to USE2019-0021 to reduce the parking requirement to zero. The variance was denied by the Board of Adjustment following hearings on January 28, 2020, and February 4, 2020. (**Attachment E**)
2019	BLD2019-0145	A grading permit issued on April 12, 2019, for site improvements. The permit was issued but never finaled. (**Attachment F**)
2019	BLD2019-0321	A building permit for Downtown Waterfront Improvements – Phase 1 issued on July 12, 2019. The project was managed by CBJ Docks and Harbors and included work in the surrounding area of Archipelago Lot 1A. (**Attachment G**)
2024	No Parking Required Area Map	Adopted in 2022 and expanded in 2024, this map shows the Town Center Parking Area and the No Parking Required Area. Archipelago Lot 1A is within the No Parking Required Area. (**Attachment H**)
2026	HRAC Recommendation Letter	The Historic Resources Advisory Committee (HRAC) met on February 4, 2026, to discuss the proposed project. The committee voted unanimously to recommend approval for this project. (**Attachment I**)

ZONING REQUIREMENTS

Standard		Requirement	Existing	Code Reference
Lot	Size	2,000 square feet	33,875 square feet	CBJ 49.25.400
	Width	20 feet	243 feet	CBJ 49.25.400
Setbacks	Front	10 feet	Vacant	CBJ 49.25.400
	Rear	10 feet	Vacant	CBJ 49.25.400
	Side	10 feet	Vacant	CBJ 49.25.400
	Side	10 feet	Vacant	CBJ 49.25.400
Lot Coverage Maximum		None	Vacant	CBJ 49.25.400
Vegetative Cover Minimum		10%	Vacant	CBJ 49.25.400
Height	Permissible	35 feet	Vacant	CBJ 49.25.400
	Accessory	35 feet	Vacant	CBJ 49.25.400
Maximum Dwelling Units (18 Units/Acre)		14 units	Vacant	CBJ 49.25.500
Use		Waterfront Commercial	Vacant	CBJ 49.25.300

SITE PLAN

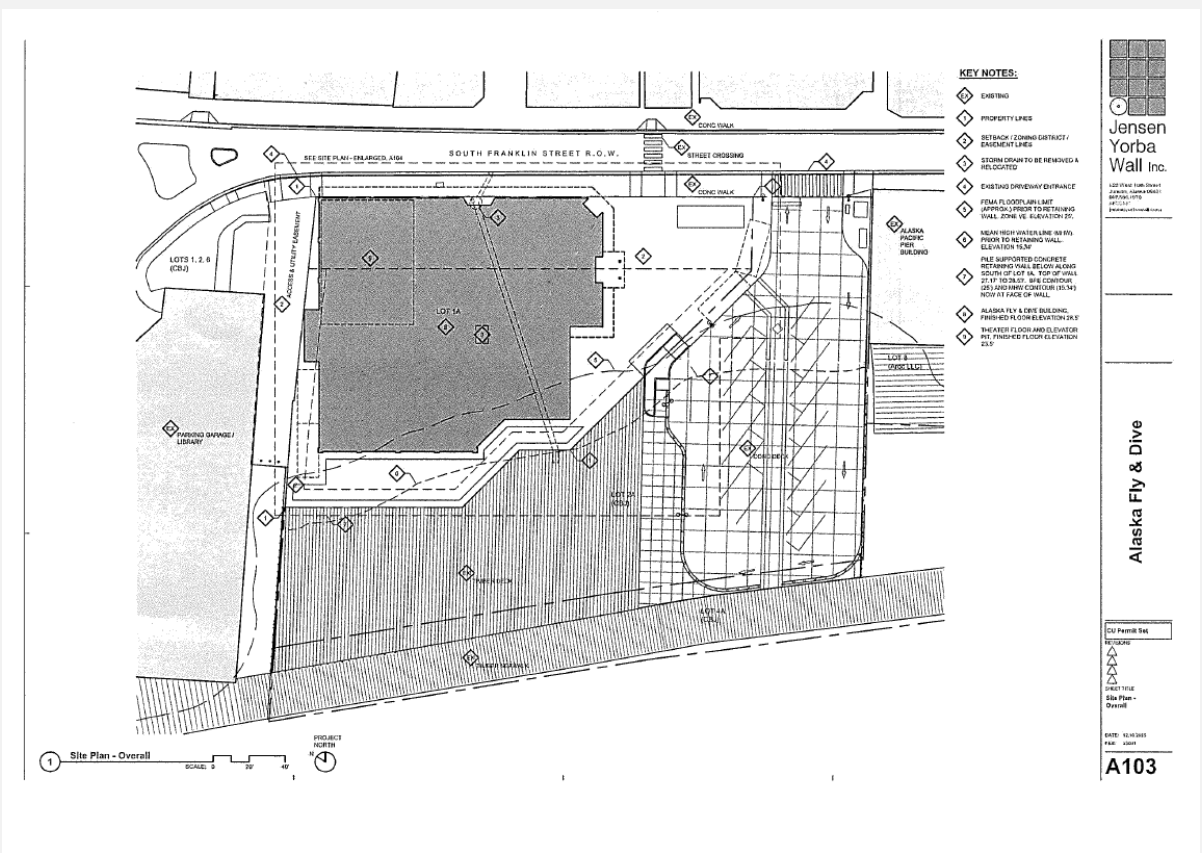

ANALYSIS

Project Site – The property is located at 356 S. Franklin Street on a vacant lot adjacent to the downtown library and parking garage. The lot is zoned Waterfront Commercial, and the first 40 feet of the property lies within the Juneau Downtown Historic District, as shown in **Attachment B**.

Waterfront Commercial zoning requires uses to be water-dependent, water-related, or water-oriented, as defined in CBJ 49.80.120. The proposed development is consistent with the water-related definition, as it provides goods and services directly associated with the adjacent water-dependent cruise ship facility.

Condition: None

Project Design – The Waterfront Commercial zoning district requires 10-foot setbacks on all sides and has a maximum building height of 35 feet. Because the first 40 feet of the site lies within the Juneau Downtown Historic District, the proposal is also reviewed against Downtown Historic District Design Standards and Guidelines setback and height recommendations, which include zero-foot front and side setbacks and a height limit of 38 feet.

The proposed structure encroaches into the west side yard setback and exceeds the 35-foot height limit of the Waterfront Commercial district. The applicant has requested VAR2025-0008 to reduce the west side yard setback and VAR2025-0009 to increase the allowable building height. The proposed structure is otherwise consistent with Juneau Downtown Historic District setback and height recommendations.

Condition: Prior to issuance of a building permit, the applicant shall obtain approval of VAR2025-0008 and VAR2025-0009 from the Planning Commission.

Traffic – According to CBJ 49.40.300(a)(2), a Traffic Impact Analysis (TIA) is not required. The proposed development is anticipated to generate less than 250 average daily trips (ADTs). The trip generation numbers below were estimated using the ITE Trip Generation Manual, 9th Edition for a Saturday, peak hour of generator. The use **Movie Theater with Matinee** describes a movie theater with audience seating, fewer than ten screens, a lobby, and a refreshment stand, operating on weekday afternoons and evenings as well as weekends. This use is the most similar to the applicant's proposed development.

Per CBJ 49.40.305, a TIA is not required. The applicant stated that they met with the Alaska DOT&PF Southcoast Region Director Goins, and stated that a traffic impact analysis is not required for DOT&PF.

Use	Total Sq. Ft.	Trips Generated	Total Trips
Movie Theater with Matinee	38,000	3.80 / 1,000 Square Feet	144.4
		Total ADTs:	**144.4**

Condition: None

Vehicle Parking & Circulation – The property is located within the No Parking Required Area. Two (2) loading spaces are required, and the applicant proposes four loading stalls on the site plan [CBJ 49.30.210(c)].

Condition: None

Noise – Noise impacts are not anticipated to exceed those typically associated with development in the Waterfront Commercial zoning district.

Condition: None

Lighting – The applicant has identified the types of lighting proposed for the project, including freestanding light poles, bollard lighting for pedestrian areas, and building entrance lighting. A lighting site plan has not yet been submitted.

Condition: Prior to issuance of a building permit, a site plan showing the confirmed locations of all outdoor lighting fixtures shall be provided for review and approval.

Vegetative Cover & Landscaping – CBJ 49.50.300 requires a minimum of 10 percent vegetative cover for the Waterfront Commercial zone. The submitted site plan includes landscaped planters providing approximately 3,420 square feet of vegetative cover, exceeding the required 3,388 square feet.

Condition: Prior to issuance of a building permit, a final landscaping plan showing the confirmed locations of vegetative cover shall be submitted for review and approval.

Habitat – No habitat regulated under Title 49 will be affected by the proposed development.

Condition: None

Drainage and Snow Storage – A drainage plan was included in the applicant's submittal. Any grading or drainage modifications will be reviewed through the building permit process.

Condition: None

Historic District – The first 40 feet of the property lies within the Juneau Downtown Historic District (**Attachment B**). The proposed building is designed to meet the Downtown Historic District Design Standards and Guidelines by aligning the structure along South Franklin Street, providing a widened sidewalk, and incorporating façade articulation consistent with surrounding historic development. The South Franklin Street façade includes a double-height ground floor, storefront-style glazing, upper-level windows, and a continuous canopy. Building height within the Juneau Downtown Historic District is limited to 38 feet, with taller elements located toward the rear of the site and out of view from the street. Exterior materials and architectural details reference historic patterns without direct replication, and recessed entrances and glazing provide pedestrian interest.

The proposal was reviewed by the Historic Resources Advisory Committee on February 4, 2026. The Committee voted unanimously to recommend approval, as the proposed project meets historic guidelines. The full HRAC recommendation letter is recorded in **Attachment I**.

Condition: None

Hazard Zones – The site is not located within a mapped avalanche hazard area.

Condition: None

Flood Zone – The proposed development is located within a Special Flood Hazard Area (Zone VE). Development within a Special Flood Hazard Area requires either a Floodplain Development Permit or a Flood Zone Exception.

Condition: Prior to issuance of a building permit, the applicant must demonstrate compliance with floodplain regulations.

Public Health, Safety, and Welfare – With the recommended conditions of approval, the proposed development is not expected to materially endanger the public health, safety, or welfare.

Condition: Upon submittal of the building permit application, the fire suppression system plans must be submitted. Suppression system design cannot be deferred.

Property Value or Neighborhood Harmony – The proposed development is consistent with other waterfront development in the Waterfront Commercial zone and incorporates the Downtown Historic District Design Standards and Guidelines to maintain the historic character of Downtown Juneau. No evidence suggests the proposal would result in a significant adverse impact on surrounding property values or neighborhood harmony.

Condition: None

AGENCY REVIEW

CDD conducted an agency review comment period between January 28, 2026, and February 20, 2026, and received the following responses, which are included in **Attachment J**.

Agency	Summary
CBJ Docks and Harbors	No comments received.
Capital City Fire & Rescue	Placement of the structure must meet 2024 IFC Appendix D, sections D104 & D105 should be addressed early on.
CDD – Building Division	Since there is a ROW that is greater than 10’ wide on the West side yard, the Building Division has no issues with this project.
CBJ Engineering & Public Works	No comments received.
CBJ Parks & Recreation	No comments received.
Alaska DOT&PF	No comments received.

PUBLIC COMMENTS

Public notice was mailed to property owners within 500 feet of the lot (**Attachment K**), a public notice sign was posted on-site two weeks prior to the hearing (**Attachment L**), and ads were placed in the Juneau Empire. Public comments received at time of writing this staff report and are summarized below.

Name	Summary
Gregory Adler	Sounds like a great idea for Juneau.

CONFORMITY WITH ADOPTED PLANS

The proposed development is in general conformity with the 2013 Comprehensive Plan, the 2015 Juneau Economic Development Plan, and the Blueprint Downtown Area Plan.

2013 COMPREHENSIVE PLAN – The proposed development is in compliance with this plan.			
Chapter	**Page No.**	**Item**	**Summary**
11	149	Marine Commercial (MC) Land Use Designation Definition	Land to be used for water-dependent commercial uses such as marinas/boat harbors, marine vessel and equipment sales and repair services, convenience goods and services for commercial and sport fishing, marine recreation and marine tourism activities such as food and beverage services, toilet and bathing facilities, bait and ice shops, small scale fish processing facilities, hotels and motels, and similar goods and services to support mariners and their guests. Float homes, house boats, and live-aboards would be residential uses to be allowed within an MC district. **The proposed development meets this Land Use Designation.**
5	48	Policy 5.5	To maintain and strengthen Downtown Juneau as a safe, dynamic, and pleasant center for government and legislative activities, public gatherings, cultural and entertainment events, and residential and commercial activities, in a manner that complements its rich historic character and building forms. **The proposed development complies with this policy.**
5	53	Policy 5.6	To encourage tourism, convention and other visitor-related activities through the development of appropriate facilities and services, while protecting Juneau's natural, cultural and economic attractions for local residents and visitors alike, and to participate in the accommodation of the future growth of tourism in a manner that addresses both community and industry concerns. **The proposed development complies with this policy.**
5	56	Policy 5.9	To facilitate availability of sufficient and suitable water-based facilities and associated land-based acreage to support water-dependent uses, and to work closely with the public and private sectors to facilitate sustainable marine commerce, commercial fishing, seafood processing, recreation, public access to the shoreline, and enjoyment of the waterfront through development of well-designed port facilities. **The proposed development complies with this policy.**

2015 ECONOMIC DEVELOPMENT PLAN – The proposed development is in compliance with this plan.			
Chapter	**Page No.**	**Item**	**Summary**
Initiative 7	92	Revitalize Downtown: Objectives and Actions	Goal: Revitalize Downtown, building the link between economic vitality and livable, mixed-use neighborhoods. Objective 2. Establish and maintain a safe, clean, attractive city center. **The proposed development complies with this goal and objective.**

BLUEPRINT DOWNTOWN AREA PLAN – The proposed development is in compliance with this plan.			
Chapter	**Page No.**	**Item**	**Summary**
2	45	Actions	Promote uses and facilities that enhance the public realm, such as ground floor retail, plazas and parks, public seating, landscaping and street trees. Establish policies and procedures for seating design, placement and management. **The proposed development complies with this goal and objective.**

FINDINGS

Conditional Use Permit Criteria – Per CBJ 49.15.330 (e) & (f), Review of Director's & Commission's Determinations, the Director makes the following findings on the proposed development:

1. ***Is the application for the requested Conditional Use Permit complete?***

   Analysis: No additional analysis required.

   Finding: Yes. The application for the requested Conditional Use Permit is complete.

2. ***Is the proposed use appropriate according to the Table of Permissible Uses?***

   Analysis: The proposed use is permissible with a conditional use permit process in the Waterfront Commercial zone.

   Finding: Yes. The proposed use is appropriate according to the Table of Permissible Uses.

3. ***Will the proposed development comply with the other requirements of this chapter?***

   Analysis: No further analysis needed.

Finding: Yes. With the recommended conditions, the proposed development will comply with Title 49, including parking, lighting, signage, public and private improvements, vegetative cover, and noise.

4. Will the proposed development materially endanger the public health, safety, or welfare?

Analysis: No further analysis needed.

Finding: No. There is no evidence to suggest that with appropriate conditions, the requested use, in the Waterfront Commercial zone, will materially endanger public health or safety.

5. Will the proposed development substantially decrease the value of or be out of harmony with property in the neighboring area?

Analysis: No further analysis needed.

Finding: No. There is no evidence to suggest that with appropriate conditions, the requested use, in a Waterfront Commercial zoning district, will substantially decrease the value of or be out of harmony with the property in the neighboring area.

6. Will the proposed development be in general conformity with the 2013 Comprehensive Plan, the Blueprint Downtown Area Plan, or other officially adopted plans?

Analysis: No further analysis needed.

Finding: Yes. The proposed use, with the recommended conditions, will be in general conformity with the 2013 Comprehensive Plan, the 2015 Juneau Economic Development Plan, and the Blueprint Downtown Area Plan.

RECOMMENDATION

Staff recommends the Planning Commission adopt the Director's analysis and findings and APPROVE the requested Conditional Use Permit. The permit would allow the development of an approximately 38,000 square foot entertainment and retail building containing three theater attractions, a retail space, and associated office and support areas.

The approval is subject to the following conditions:

1. Prior to issuance of a building permit, the applicant shall obtain approval of VAR2025-0008 and VAR2025-0009 from the Planning Commission.
2. Prior to issuance of a building permit, a site plan showing the confirmed locations of all outdoor lighting fixtures shall be provided for review and approval.
3. Prior to issuance of a building permit, a final landscaping plan showing the confirmed locations of vegetative cover shall be submitted for review and approval.
4. Prior to issuance of a building permit, the applicant must demonstrate compliance with floodplain regulations.
5. Upon submittal of the building permit application, the fire suppression system plans must be submitted. Suppression system design cannot be deferred.

STAFF REPORT ATTACHMENTS

Item	Description
Attachment A	Application Packet
Attachment B	Juneau Downtown Historic District Map
Attachment C	Plat 2019-19
Attachment D	USE2019 0021
Attachment E	VAR2019 0005
Attachment F	BLD2019-0145
Attachment G	BLD2019-0321
Attachment H	No Parking Required Area Map
Attachment I	HRAC Recommendation Letter
Attachment J	Agency Comments
Attachment K	Abutters Notice
Attachment L	Public Notice Sign Photo

CITY AND BOROUGH OF JUNEAU
ALASKA'S CAPITAL CITY

DEVELOPMENT PERMIT APPLICATION

NOTE: Development Permit Application forms must accompany all other Community Development Department land use applications. This form and all documents associated with it are public record once submitted.

To be completed by Applicant

PROPERTY LOCATION

Physical Address
356 S. Franklin Street, Juneau, Alaska

Legal Description(s) (Subdivision, Survey, Block, Tract, Lot)
Archipelago Lot 1A

Parcel Number(s)
1C070-K83-0022

[X] This property is located in the downtown historic district
[ ] This property is located in a mapped hazard area, if so, which _____

LANDOWNER

Property Owner
Archipelago Properties, LLC

Contact Person
Erica Simpson

Mailing Address
725 Broad St - Augusta, GA 30901

Phone Number(s)
907.765.7601
925.878.9424

E-mail Address

LANDOWNER CONSENT

Required for Planning Permits, not needed on Building/ Engineering Permits.
Consent is required of all landowners. If submitted with the application, alternative written approval may be sufficient. Written approval must include the property location, landowner's printed name, signature, and the applicant's name.

I am (we are) the owner(s) of the property subject to this application and I (we) consent as follows:
A. This application for a land use or activity review for development on my (our) property is made with my complete understanding and permission.
B. I (we) grant permission for the City and Borough of Juneau officials/employees to inspect my property as needed for purposes of this application.

Archipelago Properties, LLC
Craig S. Mitchell — President
Landowner (Printed Name) — Title (e.g.: Landowner)

x _____ 8/18/2025
Landowner (Signature) — Date

_____
Landowner (Printed Name) — Title (e.g.: Landowner)

x _____ _____
Landowner (Signature) — Date

NOTICE: The City and Borough of Juneau staff may need access to the subject property during regular business hours. We will make every effort to contact you in advance, but may need to access the property in your absence and in accordance with the consent above. Also, members of the Planning Commission may visit the property before a scheduled public hearing date.

APPLICANT

If same as LANDOWNER, write "SAME"

Applicant (Printed Name)
Reuben Willis (signed sales agreement for lot, in due diligence period)

Contact Person

Mailing Address
2908 Jackson Road, Juneau, Alaska 99801

Phone Number(s)
907.723.5771

E-mail Address
reubenwillis@gmail.com, willis@gci.net

x _____ 8/18/25
Applicant's Signature — Date of Application

---DEPARTMENT USE ONLY BELOW THIS LINE---

Intake Initials: 12/12/25

INCOMPLETE APPLICATIONS WILL NOT BE ACCEPTED

For assistance filling out this form, contact the Permit Center at 586-0770.

Case Number: USE25-013
VAR25-008
VAR25-009

Date Received: 12/12/25

I:\FORMS\PLANFORM\DPA_Final Draft.docx

Updated 8/2025– Page 1 of 1

CITY AND BOROUGH OF JUNEAU
ALASKA'S CAPITAL CITY
COMMUNITY DEVELOPMENT

ALLOWABLE/CONDITIONAL USE PERMIT APPLICATION

See reverse side for more information regarding the permitting process and the materials required for a complete application.

NOTE: Must be accompanied by a DEVELOPMENT PERMIT APPLICATION form.

To be completed by Applicant

PROJECT SUMMARY

A new entertainment and retail building, see attached narrative for additional information.

TYPE OF ALLOWABLE OR CONDITIONAL USE PERMIT REQUESTED

- ○ Accessory Apartment – Accessory Apartment Application (AAP)
- ◉ Use Listed in 49.25.300 – Table of Permissible Uses (USE)

Table of Permissible Uses Category: Theaters seating for 200 or fewer (6.130), Sales less than 5,000 sf (2.100), Seasonal open air food service (8.300),

IS THIS A MODIFICATION or EXTENSION OF AN EXISTING APPROVAL? ○ YES – Case # _____ ◉ NO

UTILITIES PROPOSED WATER: ☑ Public ☐ On Site SEWER: ☑ Public ☐ On Site

SITE AND BUILDING SPECIFICS

Total Area of Lot 33,875 square feet Total Area of Existing Structure(s) 0 square feet

Total Area of Proposed Structure(s) 37,100 square feet

EXTERNAL LIGHTING

Existing to remain	◉ No	○ Yes – Provide fixture information, cutoff sheets, and location of lighting fixtures
Proposed	○ No	◉ Yes – Provide fixture information, cutoff sheets, and location of lighting fixtures

ALL REQUIRED DOCUMENTS ATTACHED

☑ **Narrative including:**

- ☑ Current use of land or building(s)
- ☑ Description of project, project site, circulation, traffic etc.
- ☑ Proposed use of land or building(s)
- ☑ How the proposed use complies with the Comprehensive Plan

If this is a modification or extension include:

- ☐ Notice of Decision and case number
- ☐ Justification for the modification or extension
- ☐ Application submitted at least 30 days before expiration date

☑ **Plans including:**

- ☑ Site plan
- ☑ Floor plan(s)
- ☑ Elevation view of existing and proposed buildings
- ☑ Proposed vegetative cover
- ☑ Existing and proposed parking areas and proposed traffic circulation
- ☑ Existing physical features of the site (e.g.: drainage, habitat, and hazard areas)

----------DEPARTMENT USE ONLY BELOW THIS LINE----------

ALLOWABLE/CONDITIONAL USE FEES

	Fees	Check No.	Receipt	Date
Application Fees	$ 1,000.00			
Admin. of Guarantee	$			
Adjustment	$			
Pub. Not. Sign Fee	$ 50			
Pub. Not. Sign Deposit	$ 100			
Total Fee	$ 1,150.00			

This form and all documents associated with it are public record once submitted.

INCOMPLETE APPLICATIONS WILL NOT BE ACCEPTED

For assistance filling out this form, contact the Permit Center at 586-0770.

Case Number	Date Received
USE25-013	12/15/15

Allowable/Conditional Use Permit Application Instructions

Allowable Use permits are outlined in CBJ 49.15.320, Conditional Use permits are outline in CBJ 49.15.330

Pre-Application Conference: A pre-application conference is required prior to submitting an application. There is no fee for a pre-application conference. The applicant will meet with City & Borough of Juneau and Agency staff to discuss the proposed development, the permit procedure, and to determine the application fees. To schedule a pre-application conference, please contact the Permit Center at 586-0770 or via e-mail at permits@juneau.org.

Application: An application for an Allowable/Conditional Use Permit will not be accepted by the Community Development Department until it is determined to be complete. The items needed for a complete application are:

1. **Forms:** Completed Allowable/Conditional Use Permit Application and Development Permit Application forms.
2. **Fees:** Fees generally range from $350 to $1,600. Any development, work, or use done without a permit issued will be subject to double fees. All fees are subject to change.
3. **Project Narrative:** A detailed narrative describing the project.
4. **Plans:** All plans are to be drawn to scale and clearly show the items listed below:
    A. Site plan, floor plan and elevation views of existing and proposed structures
    B. Existing and proposed parking areas, including dimensions of the spaces, aisle width and driveway entrances
    C. Proposed traffic circulation within the site including access/egress points and traffic control devices
    D. Existing and proposed lighting (including cut sheets for each type of lighting)
    E. Existing and proposed vegetation with location, area, height and type of plantings
    F. Existing physical features of the site (i.e. drainage, eagle trees, hazard areas, salmon streams, wetlands, etc.)

Document Format: All materials submitted as part of an application shall be submitted in either of the following formats:

1. Electronic copies in the following formats: .doc, .txt, .xls, .bmp, .pdf, .jpg, .gif, .xlm, .rtf (other formats may be preapproved by the Community Development Department).
2. Paper copies 11" X 17" or smaller (larger paper size may be preapproved by the Community Development Department).

Application Review & Hearing Procedure: Once the application is determined to be complete, the Community Development Department will initiate the review and scheduling of the application. This process includes:

Review: As part of the review process the Community Development Department will evaluate the application for consistency with all applicable City & Borough of Juneau codes and adopted plans. Depending on unique characteristics of the permit request the application may be required to be reviewed by other municipal boards and committees. During this review period, the Community Development Department also sends all applications out for a 15-day agency review period. Review comments may require the applicant to provide additional information, clarification, or submit modifications/alterations for the proposed project.

Hearing: All Allowable/Conditional Use Permit Applications must be reviewed by the Planning Commission for vote. Once an application has been deemed complete and has been reviewed by all applicable parties the Community Development Department will schedule the requested permit for the next appropriate meeting.

Public Notice Responsibilities: Allowable/Conditional Use requests must be given proper public notice as outlined in CBJ 49.15.230:

The Community Development Department will give notice of the pending Planning Commission meeting and its agenda in the local newspaper a minimum of 10-days prior to the meeting. Furthermore, CDD will mail notices to all property owners within 500-feet of the project site.

The Applicant will post a sign on the site at least 14 days prior to the meeting. The sign shall be visible from a public right-of-way or where determined appropriate by CDD. Signs may be produced by the Community Development Department for a preparation fee of $50, and a $100 deposit that will be refunded in full if the sign is returned within seven days of the scheduled hearing date. If the sign is returned between eight and 14 days of the scheduled hearing $50 may be refunded. The Applicant may make and erect their own sign. Please contact the Community Development Department for more information.

INCOMPLETE APPLICATIONS WILL NOT BE ACCEPTED

CITY AND BOROUGH OF JUNEAU
ALASKA'S CAPITAL CITY
COMMUNITY DEVELOPMENT

(907) 586-0715
CDD_Admin@juneau.gov
www.juneau.org/community-development
155 Heritage Way • Juneau, AK 99801

Alaska Fly & Dive

Case Number:	PAC2025 0050
Applicant:	Reuben Williams
Property Owner:	Archipelago Properties LLC
Property Address:	356 S Franklin Street
Parcel Code Number:	1C070K830022
Site Size:	33,875 square feet, 0.7777 Acres
Zoning:	Waterfront Commercial
Existing Land Use:	Vacant

Conference Date:	October 15, 2025
Report Issued:	October 20, 2025

DISCLAIMER: Pre-Application conferences are conducted for the purpose of providing applicants with a preliminary review of a project and timeline. Pre-application conferences are not based on a complete application and are not a guarantee of final project approval.

List of Attendees

Note: Copies of the Pre-Application Conference Report will be emailed, instead of mailed, to participants who have provided their email address below.

Name	Title	Email address
Reuben and Erin Willis	Applicant	reubenwillis@gmail.com
Corey Wall	JYW Architects	corey@jensenyorbawall.com
Cindy Emerick	Malvern Attraction Designer	cemerick@malvernentertainment.com
Mark Lukacs	Diamond One Construction	mark@diamond1co.com
Irene Gallion	Planning	irene.gallion@juneau.gov
Forrest Courtney	Planning – Flood	Forrest.courtney@juneau.gov
Justin Smith	Planning	Justin.Smith@juneau.gov
Jeff Hedges	Building	Jeff.Hedges@juneau.gov
Theresa Ross	Capital City Fire and Rescue	Theresa.Ross@juneau.gov
Bri Rose	Permitting	Bri.rose@juneau.gov
Madelaine Carse	Admin	Madeline.carse@juneau.gov

PROTECT YOURSELF AND YOUR CLIENTS FROM FRAUD!

Applicants who have cases before the Planning Commission have received e mails the day before their hearing stating that a large sum of fees needs to be paid. The notice will look official, threaten to pull the case from the Commission agenda if fees are not paid. The email will provide an invoice, a link, and ask that you only work with the e mail sender so that fees can be properly tracked.

CBJ WILL NOT INVOICE FEES THE DAY BEFORE A HEARING.

Your case will not be scheduled for a Commission hearing unless you've paid your fees. If you have a hearing date, your fees are paid.

Do not click on any link, as it may install malware on your computer.

All invoicing occurs through our Permit Center. Do not provide funds or fees directly to staff.

Other red flags to watch for include:

- An unexpected email or fee.
- The timing and wording creates urgency – for instance, the day or two before an important hearing.
- The e mail includes non-standard practices, such as dealing with a specific person.
- Links look strange.
- The letter uses odd names or nonstandard e mail addresses.
- The letter has poor grammar.

IF EVER IN DOUBT, CALL OUR PERMIT CENTER AT (907) 586-0770, and ask them about the invoice.

CONFERENCE SUMMARY

The applicant will need to apply for and receive the following Planning Commission approvals:

- A conditional use permit [CBJ 49.25.300(c)(3)(D)], approving a zero-foot setback from the front and side lot line in accordance with Historic District standards [04 CBJAC 08.450, 7.1].
    - A review by the Historic Resources Advisory Committee (HRAC) will be held prior to a Planning Commission hearing [CBJ 49.70.530(a), (b)].
- A variance for height, for the structure and for the statuary [Table 49.25.400].
- A variance for north side lot line setback less than 10 feet from the lot line [Table 49.25.400].
- A flood zone development permit (administrative) OR exemption (Planning Commission decision), depending on the eventual layout of the project {CBJ 49.70.400(e)].. Per discussions in the meeting, flood permitting should not be pursued until the layout of the building is well established, as modifications are difficult.

Procedure:

- Application materials should be ready for HRAC review, so the review can be scheduled promptly after application submission. Historic District Design Standards are attached to these notes.
- The conditional use permit, variance, and flood exemption can be heard at one Planning Commission meeting.

Questions/issues/agreements identified at the conference that weren't identified in the attached reports.

Is the project in the Historic District?

- Yes.

Clarification on the number of patrons:

- Flying Theater: 72 seats
- 4D Theatre: 60 seats
- Oceanic Theater: Three with 20 seats each, 60 total.
- Up to 24 staff at one time.
- With cueing and exiting, up to 400 users in the facility at one time.
- Ticketing will be electronic, limiting line formation.

What if changes need to be made in response to HRAC feedback?

- Changes can be submitted before the case goes to the Planning Commission. Changes after the Planning Commission decision would need to be reconsidered by the Planning Commission. If changes become necessary, please provide well-reasoned description of changes.

What if changes are needed after Planning Commission approval?

- Reasonable variations can be requested under the Conditional Use Permit – for instance, structure up to a certain square footage.
- Changes to the Conditional Use Permit are not unusual on a project of this scope. Changes must be approved by the Planning Commission as a modification to a conditional use permit. If changes become necessary, please provide well-reasoned description of changes.
- Variances are required to be narrowly tailored – a range cannot be provided.

Can we apply for a building permit while the land use permits are under consideration?

- You can, at your own risk.
    - The documents for a building permit require enough investment to give the building inspectors the information they need – say, 95% completion.

- If the Commission recommends changes that modify building design, it is more expensive to modify design documents at 95% rather than 30%.
- For consideration, a grading permit can be reviewed, approved and issued while other documents are being reviewed.

Project Overview

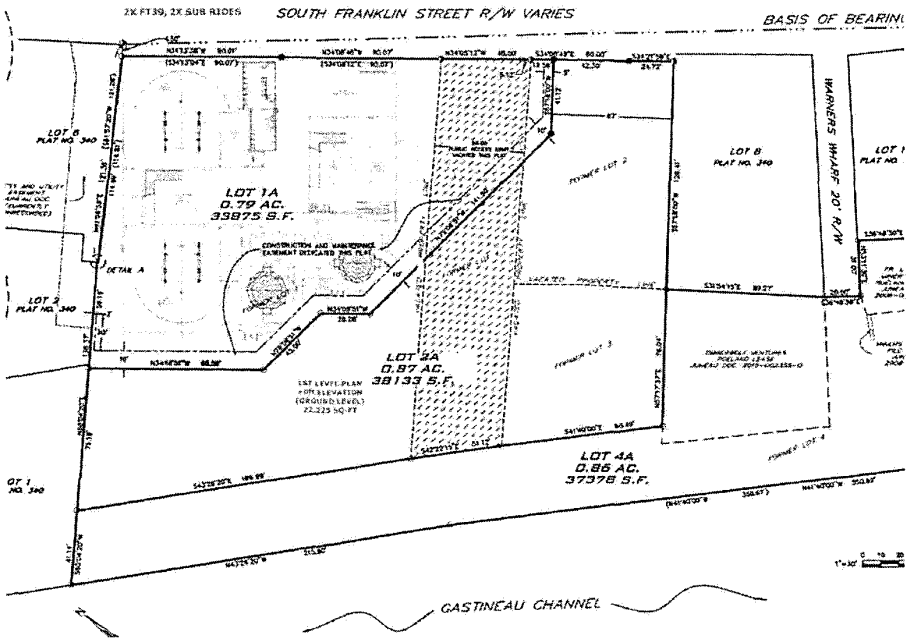

Plans were modified between submission for the pre-application conference and the date of the conference.

The Applicant proposes a 36,000+ square foot building that includes a 55 foot high theatre, and steps down to 38 feet outside of the theatre. There will be approximately 2,500 square feet of associated retail. There will be a landscaped park to the east, which may accommodate emergency evacuation, provide pedestrian access to the waterfront, and possibly host two food "trucks."



As presented, the height and north lot line setback will require a variance. A variance application is required to show that:

- Enforcement of the ordinance would create an undue hardship resulting from the unusual or special conditions of the property.
- The unusual or special conditions of the property are not caused by the person seeking the variance.
- The grant of the variance is not detrimental to public health, safety or welfare. AND
- The grant of the variance is narrowly tailored to relieve the hardship.

Process:

- Submit the application and back-up materials (listed on ten back of the application).
    - Electronic submissions accepted at Permits@juneau.gov . Note that the permit center will call you for payment when the application is processed. Applications are submitted in the order in which they are received, and it may be a few days before you get a call.
- The project will be assigned to a planner. They will review submitted materials, and coordinate where necessary. When the planner assesses the file is complete, they will schedule agency reviews. These will include:
    - Historic Resources Advisory Committee
    - Docks and Harbors
    - The Alaska Department of Transportation and Public Facilities – owners of Franklin Street.
- When the HRAC review is complete, the planner will schedule a hearing before the Planning Commission.
    - A notice will be sent to property owners within 500 feet of the project.
    - There will be two newspaper ads for the case.

  - The Applicant is required to post a Public Notice sign, which will be provided by CDD. The sign must be posted two weeks before the hearing.
  - Staff will prepare a report analyzing the project, and make a recommendation to the Commission. The report will be publicly available the week before the hearing.
- At the Planning Commission meeting, the project can be:
  - On the Consent Agenda, where it will be passed without discussion (unlikely, in this situation).
  - On the Regular Agenda:
    - The Director will briefly describe the project.
    - The Applicant has 15 minutes to describe the project.
    - The public has the opportunity to comment. There is usually a time limit of two to three minutes.
    - The Applicant has time to respond to issues raised.
    - Public comment is closed and there is no additional opportunity to participate.
- The Planning Commission will:
  - Approve the project
  - Approve the project with conditions (the most common outcome)
  - Deny the project
  - Continue the project – if more information is required or if the Commission runs out of time.
- The decision can be appealed for 20 days after the Notice of Decision is filed with the City Clerk. If the decision is appealed, the Applicant can continue with their project at their own risk.

Videos of the Planning Commission activities are posted on Assembly's Minutes and Agendas site.
https://juneauak.portal.civicclerk.com/

SECTION 1 – PLANNING DIVISION

1. **Zoning** – Waterfront Commercial (WC)

   Previous use permits were pursued with the assumption that the lot had to meet the requirements of the Historic District standards for setbacks. The 40 feet adjacent to Franklin Street is in the Historic District.

2. **Table of Permissible Uses** –

   Paragraph 6.130 allows theatres under 200 seats with a Conditional Use Permit.

   Paragraph 2.120 allows under 5,000 square feet of retail with a Conditional Use Permit.

3. **Setbacks** –

   a. **Front (Franklin Street, east)**: 10 feet, with Historic District overlay reduction to zero.

   b. **Rear (west):** 10 feet

   c. **Side (north):** 10 feet, with a Historic District overlay reduction to zero. Note that the building will need to be 10 feet from the lot line 40 feet back from the front lot line, OR pursue a variance for the setback encroachment beyond the historic district boundary.

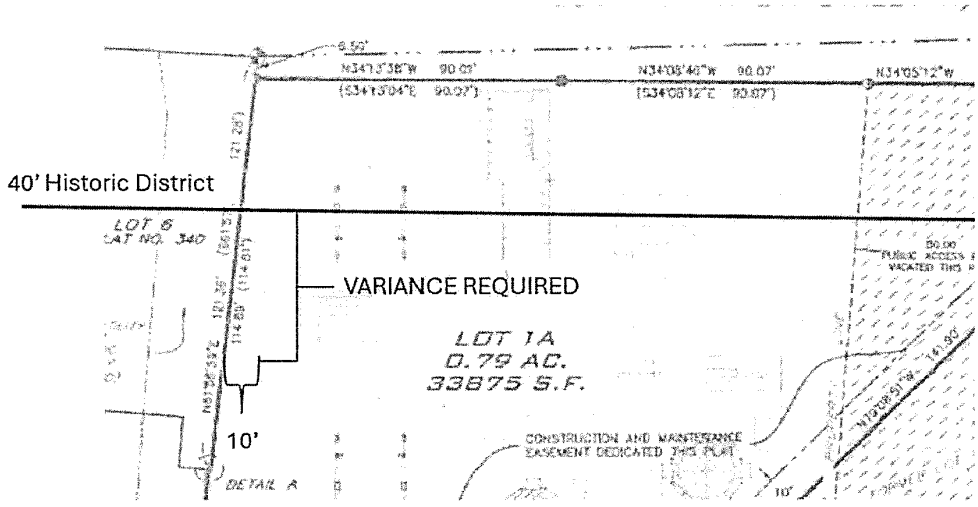

d. **Side (south):** 10 feet

e. The image below shows Juneau's adopted Historic District imposed on overhead imagery. While not perfect, it indicates the first 40 feet of the Archipelago lot falls in the Historic District.

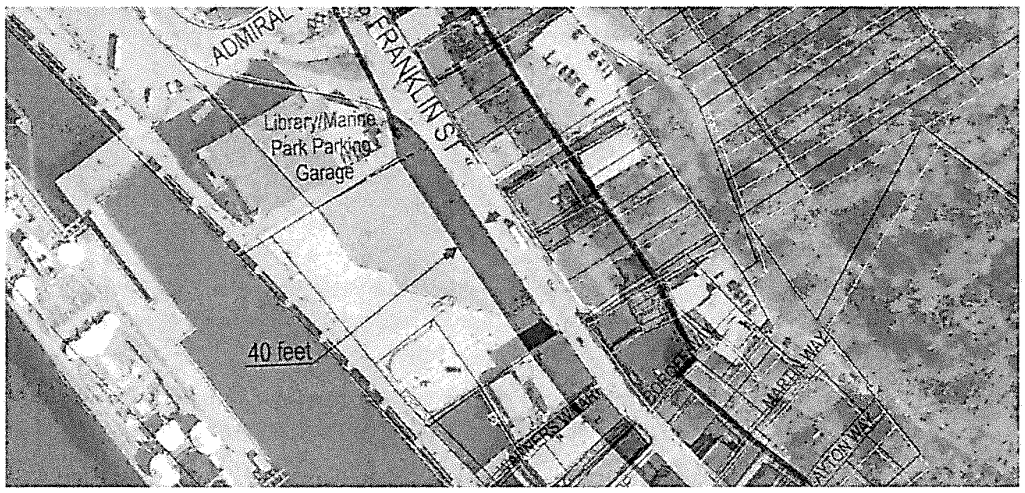

Under the Downtown Historic Design Standards and Guidelines (04 CBJ 080.450, paragraph 7.1) the front street wall should be located at the sidewalk line when feasible.

4. **Height** – The height limit in Waterfront Commercial is 35 feet. According to the adopted Historic District map, special height limits in the first 40 feet of frontage is 38 feet. There is no provision in Historic Design Standards for exceeding 38 feet in height.

   The applicant has reduced the flying theatres from two to one, to limit the 55' height required to accommodate the venue. They considered excavating and lowering the theatre. The proposal does not meet engineering requirements, and FEMA flood restrictions would not allow the excavation and lowering of the theatre.

   The Marine View Library roof is 62 feet 6 inches high, extending to 74 feet high at the elevator shaft and stained glass windows.

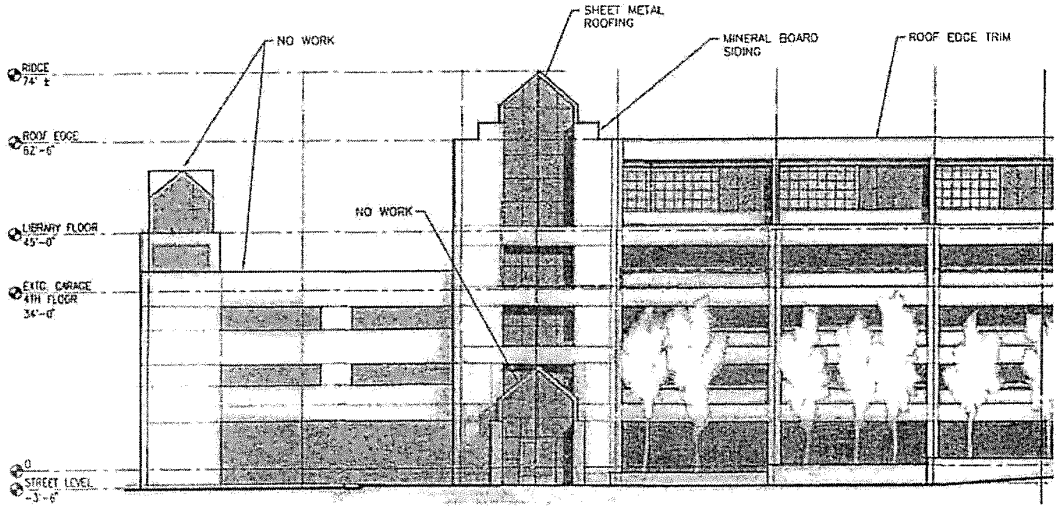

1 NORTH ELEVATION
Scale: 1/64" = 1'-0"

Image is from BLD2008-00550 Plans.

The Marine Parking Garage was contracted in 1983, but delayed due to a lawsuit on contracting. At the time of design and permitting, the area was zoned Industrial with no height limit and a 20-foot front yard setback. There was no side or rear yard setback requirement.

The library was constructed on top of the Marine Parking Garage after it was completed. The library was introduced to the Commission in 1987, while the new code was under review.

5. **Access** – Franklin Street.
6. **Parking & Circulation** – The lot is in Juneau's No Parking Required Area [NPRA, Ordinance 2022-04(b)]. Provide the Commission with information on how you anticipate employee parking to be handled.
7. **Lot Coverage** – There are no lot coverage limitations in the Waterfront Commercial zoning district.
8. **Vegetative Coverage** – Ten percent (10%) or 3,388 square feet of vegetative cover is required. We recommend that plans submitted delineate vegetative cover and provide square footage.
9. **Lighting** – Exterior lighting may not shed light or glare above the roofline of the building or beyond the property line of the site. Industrial and exterior lighting shall not be used in a manner that produces glare on public highways or neighboring property.

   A draft lighting plan should be submitted for the Conditional Use permit, to help HRAC members and Commissioners understand impacts.
10. **Noise** – Noise is not anticipated to be in excess of that expected in a Waterfront Commercial district.

11. **Flood** –

    The project will require either a Flood Development Permit (Administrative) or Floodplain Exemption (Planning Commission). See **Appendix B** for details on submissions. The Applicant should anticipate having their engineer extensively involved in that process, and available at the Commission hearing to answer questions.

    Note that the application requires highly technical documents. However, the Commission is not a technical body. While the documents need to be provided to meet the requirements of code, the presentation to the Commission should use plain language to explain what the documents show and how it supports the exemption.

12. **Hazard/Mass Wasting/Avalanche/Hillside Endorsement** –

    The lot is not in a mapped avalanche hazard area. A Hillside Endorsement will not be required. The lot was mapped as "moderate" landslide hazard in 2022 mapping. CBJ does not regulate development in landslide areas.

13. **Habitat/Wetlands** – No anadromous waterbodies are on the subject parcel, or within 50 feet.

14. **Plat Restrictions** – Plat 2019-19 indicates a Juneau dock maintenance, operation and reconstruction easement (Note 10) and a occupancy easement (Note 11), both in undetermined locations and not shown on the plat.

15. **Traffic** – A traffic impact analysis is not required for CBJ. The Applicant is encouraged to contact the Alaska Department of Transportation and Public Facilities (ADOT&PF) to determine if they will require a Traffic Impact Analysis. **The contact at ADOT&PF is:**

    Michael K. Schuler

    Property Management Officer

    State of Alaska Dept. of Transportation

    Southcoast Region

    (907) 465-4499 Desk

    (907) 419-4510 Mobile

    The facility serves tourists coming off the ships. Vehicle traffic would consist of up to 35 staff, and deliveries.

    CBJ recognizes that at maximum staffing, full staff turn-over would have to occur three times a day to get up to 210 AADT, leaving 40 AADT for deliveries before the facility reached thresholds for CBJ requirement of a Traffic Impact Analysis.

16. **Historic District** – The 40 feet of the lot along Franklin Street is in the Historic District.

    The proposed project will be reviewed for compliance with Historic District standards by the Planning Commission [CBJ 49.70.530]. The Historic Resources Advisory Committee (HRAC) will review the project before it goes to the Commission, and provide a recommendation. Documents submitted for the Conditional Use Permit should address Historic District Design Standards (attached).

    Show that the roof features – airplanes, whales, etc. – are outside of the Historic District, and visually shielded from Franklin Street. Alternately, make sure approvals are explicit for inclusion in the Historic District.

SECTION 2 – BUILDING DIVISION

17. **Building** – Alaska licensed design professionals required for all trades.
18. **Outstanding Permits** – BLD20190321 Downtown Waterfront Improvements Phase 1; BLD20190145 Grading

SECTION 3 – GENERAL ENGINEERING/PUBLIC WORKS DEPARTMENTS

19. No comments provided.

SECTION 4 – FIRE DEPARTMENT

20. Need to closely evaluate access as design progresses and fire systems are designed. May have concerns with turn radius of apparatus with location of the buildings as placed on the property.
21. Suppression system plans must be submitted with the building permit application. This occupancy type requires full automatic sprinkler and fire alarm systems.

SECTION 5 – OTHER APPLICABLE AGENCY REVIEW

22. The Alaska Department of Transportation and Public Facilities will be asked to comment on the project.
23. The CBJ Docks and Harbors will be asked for their evaluation.

    The lot's last iteration was as part of a private public partnership, and Archipelago intended to start construction of their improvements to the gravel lot shortly after D&H completed their portion of the work. As part of the combined effort, a new storm drain system was envisioned. The black HDPE pipes currently staged on site were intended to be installed by Archipelago after they demolished the existing storm drain system.

    The new owners should replace the existing aging storm drain system before construction, in a way that works with their plans.

    PND was involved in the project.

    Also attached is the:

    - As-built from the improvements.
    - Site plan concept and storm drain replacement concept from previous project
    - Photos from the demolition of the Cold Storage foundation.

SECTION 6 – LIST OF REQUIRED APPLICATIONS

Based upon the information submitted for pre-application review, the following list of applications must be submitted in order for the project to receive a thorough and speedy review.

24. Development Permit Application, with owner's name and permission. If the owner is a corporation or other legal entity, provide documentation that the signer has permission to sign for the entity – for instance, incorporation documents showing the individual's standing in the company.
25. Conditional Use Permit Application.
26. Variance – one for height, one for north side yard setbacks.
27. Flood Zone Exception Application

Additional Submittal Requirements

Submittal of additional information, given the specifics of the development proposal and site, are listed below. These items will be required in order for the application to be determined Counter Complete.

28. A copy of this pre-application conference report.
29. Documents that address Historic District Standards and are ready for Historic Resources Advisory Committee review. This should include a lighting plan consistent with Historic District Design Standards.
30. Documents that support the application signer has authority to sign for the entity (if applicable).

Exceptions to Submittal Requirements

Submittal requirements that staff has determined **not** to be applicable or **not** required, given the specifics of the development proposal, are listed below. These items will **not** be required in order for the application to be reviewed.

31. Not applicable.

FEE ESTIMATES

The preliminary plan review fees listed below can be found in the CBJ code section 49.85.

Based upon the project plan submitted for pre-application review, staff has attempted to provide an accurate estimate for the permits and permit fees which will be triggered by your proposal.

1. Conditional Use Permit, Class IV: $1,000.00
2. Variance – Height: $400
3. Variance – Side Lot Line: $400
4. Flood Exception Permit: $400 OR Flood Zone Development Permit $100.
5. Public notice sign: $150, $100 refundable if the sign is returned by the Monday following the Commission hearing.

For informational handouts with submittal requirements for development applications, please visit our website at www.juneau.org/community-development.

Submit your Completed Application

You may submit your application(s) online via email to permits@juneau.gov or mail to:

City & Borough of Juneau, Permit Center Hub
155 Heritage Way
Juneau, AK 99801

Phone: (907) 586-0715
Web: www.juneau.org/community-development

ATTACHMENTS:

A: 49.70 Article IV, Flood Hazard Areas
B: Flood Permitting Summary
C: 49.15.330 – Conditional Use Permit
D: Historic Resources Design Standards
E: Development Permit Application (no footer)

F: Conditional Use Permit Application (no footer)
G: Variance Application (no footer)
H: Flood Zone Exception Application (no footer)
I: Flood Zone Development Permit (no footer)
J: Preliminary site plan for Archipelago project
K: As-built from Downtown Waterfront Improvements Phase I
L: Combined Public and Private Development Plan (Proposed 12" Storm Drain Replacement Concept)
M, N, O: Cold Storage foundation demolition photos

Jensen Yorba Wall Inc.
522 West 10th Street, Juneau, Alaska 99801 907.586.1070 jensenyorbawall.com

Date: December 10, 2025
Re: Alaska Fly & Dive (JYW No. 25031)
Conditional Use Permit Application Narratives

Lot

- Parcel: 1C070-K83-0022 (Lot 1A)
- Address: 356 S. Franklin Street, Juneau
- Area: 33,875 sf (0.7777 Acres)

Narrative

Current Use

The lot is currently an undeveloped flat lot in the center of the tourist district. The lot was modified in a joint project with CBJ Docks and Harbors around 2020 to consolidate several parcels into the privately owned 33,875 sf Lot 1A and adjacent municipal-owned lots to the south (water side) and east. The resulting Lot 1A parcel is bordered by South Franklin Street to the north, the CBJ Docks and Harbors concrete deckover parking / loading area to the east, the CBJ Docks and Harbors timber deck / Seawalk to the south, and the CBJ Parking Garage and Library to the west.

The concrete and timber deckover improvements closely align with the property lines to the south and east. A portion of the deckover concrete landscaped planter overlaps onto the site on the east side. The lot is otherwise undeveloped.

Proposed Project

The Alaska Fly & Dive is an exciting new entertainment and retail experience. The building will house three unique theater/rides, a retail store, and associated offices and support spaces. The 37,100 sf building will have a public Commons (lobby) on the east side of the building, opening both to South Franklin and the east Plaza. The Commons will serve as the central circulation space, connecting the ground-floor Retail and Restroom Spaces as well entry to the 60-person 4D Theater on this level. A central Ticket Counter in the Commons will have staff who can direct visitors around the building. Large central stairs and an elevator will take Visitors up to the 2nd Floor to the primary 72-person Flying Theater and three 20-person Ocean 360 rides. Visitors exiting the rides will be routed back towards the double-height Commons space where they can either go on a different ride or proceed back down to the ground floor and exit through the Retail space.

A mid-level Mezzanine level will house back-of-house spaces, including offices and storage. Emergency exits will be located on the west side of the building to comply with all code requirements.

Construction. The building will be steel-framed with steel pile foundations bearing directly on bedrock. Floors will be a combination of composite concrete over steel deck and pre-cast concrete hollow core planks where required by large spans. Roofs will be low-slope with single-ply membrane over rigid insulation. Exterior rainscreen siding will be a combination of steel, wood, and tile over a fiberglass girt supported exterior insulation system to provide high thermal values to the steel framing. The exteriors will be designed to comply with Historic District standards and provide a high-quality addition to this central location.

Exterior Pedestrian Circulation. Given its prime location, the building will rely on foot traffic for access, similar to the other tourist facilities in this South Franklin area. Tourists will approach the building from the sidewalk on either side of South Franklin Street or over the deckover plaza from the Seawalk. Storefront entries along South Franklin allow entry from the street side, while an entry facing the east Plaza will facilitate movement to and from the future open air food service here. An existing crosswalk across the street aligns very well with NE corner entry of the building and additional/modified crosswalk of South Franklin are not anticipated.

Vehicle Access. The access and utility easement and associated driveway on the west side of the lot provide vehicle access to the rear of the theaters along this side of the building. The easement also provides emergency vehicle access to the building and a route for occupants leaving the emergency exits on this side of the building. The existing Docks and Harbors deckover parking / loading area to the east provides emergency vehicle access to the building from this side. Although the deckover will not be used for site parking, two loading stalls will be located along the existing drive for use in coordination with Docks and Harbors.

Land Use. A portion of the east side of the lot will be developed as an open Plaza with landscaping for public use. This plaza will provide a pedestrian link between South Franklin and the Seawalk and is an important part of the original development plan for the Docks and Harbor deckover project. In the future, open air food service will be developed on portions of the Plaza. Landscaping and planters will be located along the south and east sides of the building with park benches and other public ammenities. The north side of the building will be built directly adjacent to the South Franklin Street sidewalk.

Comprehensive Plan Compliance. The 2013 Comprehensive Plan designates this area as MC (Marine Commercial). MC land is to be used for water-dependent commercial uses, including cruise ship tourist facilities. Although the Alaska Fly & Dive is intended to be open during the off season for local use, the majority of customers will be cruise ship tourists.

Drainage, Habitat, and Hazard Areas. The building and canopies will be low-slope roofs with internal roof drains. Storm drainage will be routed to the storm drain under the timber deckover area to the south that was planned and designed as part of the 2020 project. The existing storm drain from the catch basins in South Franklin Street will be re-routed through the site to coordinate with the building pilings. The storm drain will drain through the opening in the retaining wall as originally planned in 2020. As detailed in the Code Study below the site is not in any other hazard zones requiring mitigation.

Exterior Lighting

Exterior lighting will be designed to illuminate pedestrian pathways and building elements without unnecessary uplighting. Although not required, the building illumination will follow dark-sky best practices.

- Site Lighting: free-standing pole lighting will follow CBJ design standards to blend with lights on South Franklin Street and the adjacent CBJ properties.
- Bollard Lights: where possible, bollards will be used to illuminate pedestrian paths without large pole lighting.

- Building-Mounted Lights: pathway and entrance lights will be historic district appropriate, either Atlantic or Shepard's Crook type, typically mounted to illuminate building features such as pilasters or entrance doors.

Flood Zone

We acknowledge that the project site and proposed building are located withing the special flood hazard area per currently-adopted flood maps. Based on the current maps, a Flood Plain Development Permit would be required. A Flood Zone Exception is not believed to be required per the current maps because the proposed structures are landward of Mean High Water. However, site conditions are substantially and materially different than what is depicted on the current maps due to construction activities by CBJ. As such, we do not believe the project will require either a Flood Plain Development Permit or a Flood Zone Exception for the following reasons:

- The pile-supported concrete retaining wall, constructed in 2020 following the south property lines, was designed to withstand storm surges and wave action. Although some seawater intrusion may occur through the rock under the site, the retaining wall will deflect all storm surge and wave action.

- Even without being modified by the 2020 project, the original documented Mean High Water Line, based on the original grade elevation of 15.4', is seaward of the proposed building (see Site Plans).

- The FEMA floodplain elevation is 25' (see Site Plans). All of the building within this floodplain area has a finished floor elevation of 28.5'.

- The building will be constructed with steel pile foundations bearing on bedrock with the finished floor above the floodplain elevation within the floodplain.

- Any areas lower than the floodplain elevation (the elevator pit and 4D Theater floor) will be waterproofed to withstand water intrusion even though they are outside of the FEMA floodplain and well above a normal high tide (20').

- We propose moving the project forward with the assumption that any remaining FEMA concerns can be addressed by an as-built survey documenting existing elevations of the land and flood-proofed structures, certification that the current fill pad elevation is above the flood elevation, elevation certificate for the proposed structure (based on either design drawings or as-built condition), and documentation that the pile-supported retaining wall constructed by CBJ was designed to resist flood loads.

Traffic Impact Analysis / Alaska DOT&PF Coordination

On November 7, Reuben Willis met with DOT&PF Southcoast Region Director Christopher Goins and confirmed the following:

- Since the project will not be bringing visitors to the site by vehicle and is not asking for new driveways into the DOT-controlled South Franklin Street, a Traffic Impact Analysis will not be required by DOT.
- As long as the storm drain catch basins in South Franklin remain operational, DOT is not concerned about where the underground culvert through the lot is relocated. They do not have an easement for this culvert.

- The building canopy in the South Franklin Street R.o.W. is anticipated and will be allowed.

Zoning and Planning Study

Overlay Districts

- Parking (49.40.200, Ordinance No 2022-04(b) & 2024-20): Lot is within
  - Town Center Parking Area
  - No Parking Required Area
  - *Discussion: No parking required on site. Site plan shows 4 loading parking stalls for building service, even though none are required. No regular parking stalls will be on the site.*

- Landslide & Avalanche Areas (49.70.300, Ordinance 2023-18):
  - Lot is within Moderate Landslide/Avalanche Area according to 1987 map (repealed December 2023)
  - Lot is outside Avalanche Path according to 2022 Downtown Avalanche Assessment
  - Lot was removed from hazard zone in 2018 after application to CDD by CBJ Docks & Harbors.

- Juneau Downtown Historic District (49.70.510, Ordinance 2013.01):
  - 40' width from South Franklin is within the Downtown Historic District
  - 40' width from South Franklin has Special Height Limit of 38'
  - *Discussion: See Variance & Historic District Narratives.*

- Cruise Ship Berthing and Lightering District: Lot is within.

- 2013 Comprehensive Plan: MC (Marine Commercial)

Zoning

- Property Zoning: WC (Waterfront Commercial), 49.25.250 (a): The WC, waterfront commercial district, is intended to provide both land and water space for uses which are directly related to or dependent upon a marine environment. Such activities include private boating, commercial freight and passenger traffic, commercial fishing, floatplane operations, and retail services directly linked to a maritime clientele. Other uses may be permitted if water-dependent or water-oriented.

- Determining uses (49.25.300)
  - (c) (3): Minor development means development which is classified by zoning district as follows:
    - (D): *Any combination of the following within commercial and mixed use districts:* ...a nonresidential building totaling less than 10,000 square feet or using less than one-half acre of land in total...
  - (c) (4): "Major development" means all development activity that is not a minor development.

- Table of Permissible Uses (49.25.300)
  - (2.100) Storage and display of goods with less than 5,000 square feet and less than 20 percent of the gross floor area of outside merchandising of goods: *3 n*
  - (6.130) Theaters seating for 200 or fewer: *3 n*
  - (8:300) Seasonal open air food service without drive through: *1 n, 3 n*
  - (21.300) Visitor, cultural facilities related to features of the site: *3 n*

1, 3. Department approval required if minor development, conditional use permit required if major development.
3. Conditional use permit requires planning commission approval.
n. Use must be water-dependent, water-related, or water-oriented.

- Table of Dimensional Standards (49.25.400)
  - Maximum Lot Coverage: None
  - Maximum Height, Permissible Uses: 35' (height bonus reserved)
  - Minimum Setbacks: 10', 10', 10', 10'

- Minimum Vegetative Cover (49.50.300): 10%

Parking

- Lot is within the No Parking Required Area.
- 49.40.200 (a) (2): The No Parking Required Area, as depicted in Ordinance 2024-20 Exhibit A, is adopted. The lots within the area... ...are excluded from the parking requirements of this chapter. No additional parking is required for development in this area.

Juneau Downtown Historic District

- 40' of the lot depth along S Franklin Street is within the Juneau Downtown Historic District.
- 49.70.510 - Map: There is adopted for the purpose of defining the HST district in the City and Borough, the Juneau Downtown Historic District map, dated January 28, 2013, as the same may be amended from time to time by the assembly by ordinance. Additional height requirements shall be as specified in chapter 49.25, article IV.
- 49.70.530 – Standards for Historic District Design Review:
  - (a): Historic district design review shall be conducted by the department in the case of minor developments and by the commission in the case of major developments. The reviewing agency may approve a site development plan located within a historic district when it is satisfied that the site development under the plan as submitted or as ordered changed by the agency will:
    - (2) In the case of new construction, preserve the harmony of scale, architectural style, sidewalk level use and materials of the existing locale.
  - (b) In reviewing an application within a historic district, the reviewing agency shall use applicable guidelines and policies contained in the downtown historic district development plan and any other plan or program adopted by the assembly, acting as the Juneau historic district commission. The commission may adopt, and the agency shall apply, regulations establishing downtown historic district standards as set forth in section 49.75.220.
- Downtown Historic District Design Standards and Guidelines (Chapter 80)
  - 04 CBJAC 080.460 - Placement and Orientation. With the exception of small gaps in the building wall that occur for pedestrian or vehicular alleyways, most structures in the historic district are built to the full width of the parcel and to the front lot line. The resulting "street wall" pattern shall be maintained in new development.
    - 7.1 Maintain the alignment of buildings at the sidewalk edge.
      - Locate the front street wall at the sidewalk line when feasible.

- If the building has a modern interpretation of a storefront, it shall maintain the feel of the street wall through use of architectural elements and features at the street edge.

- 7.2 Street facades shall span lot widths.
  - Spaces between buildings shall be kept to a minimum to maintain the street wall and sense of enclosure at the sidewalk.
  - Exceptions are for access ways to side or rear entrances.

CU Permit Set

Alaska Fly & Dive

12.10.2025

A000	Cover
A100	Plat
A101	Site Plan - Property Lines
A102	Site Plan - Existing
A103	Site Plan - Overall
A104	Site Plan - Enlarged
A201	Floor Plan - 1st Floor
A202	Floor Plan - Mezzanine
A203	Floor Plan - 2nd Floor
A204	Roof Plan
A301	Exterior Elevations
A302	Exterior Elevations
A311	Building Section
A312	Building Section
A321	Perspective Views
A322	Perspective Views
A323	Perspective Views

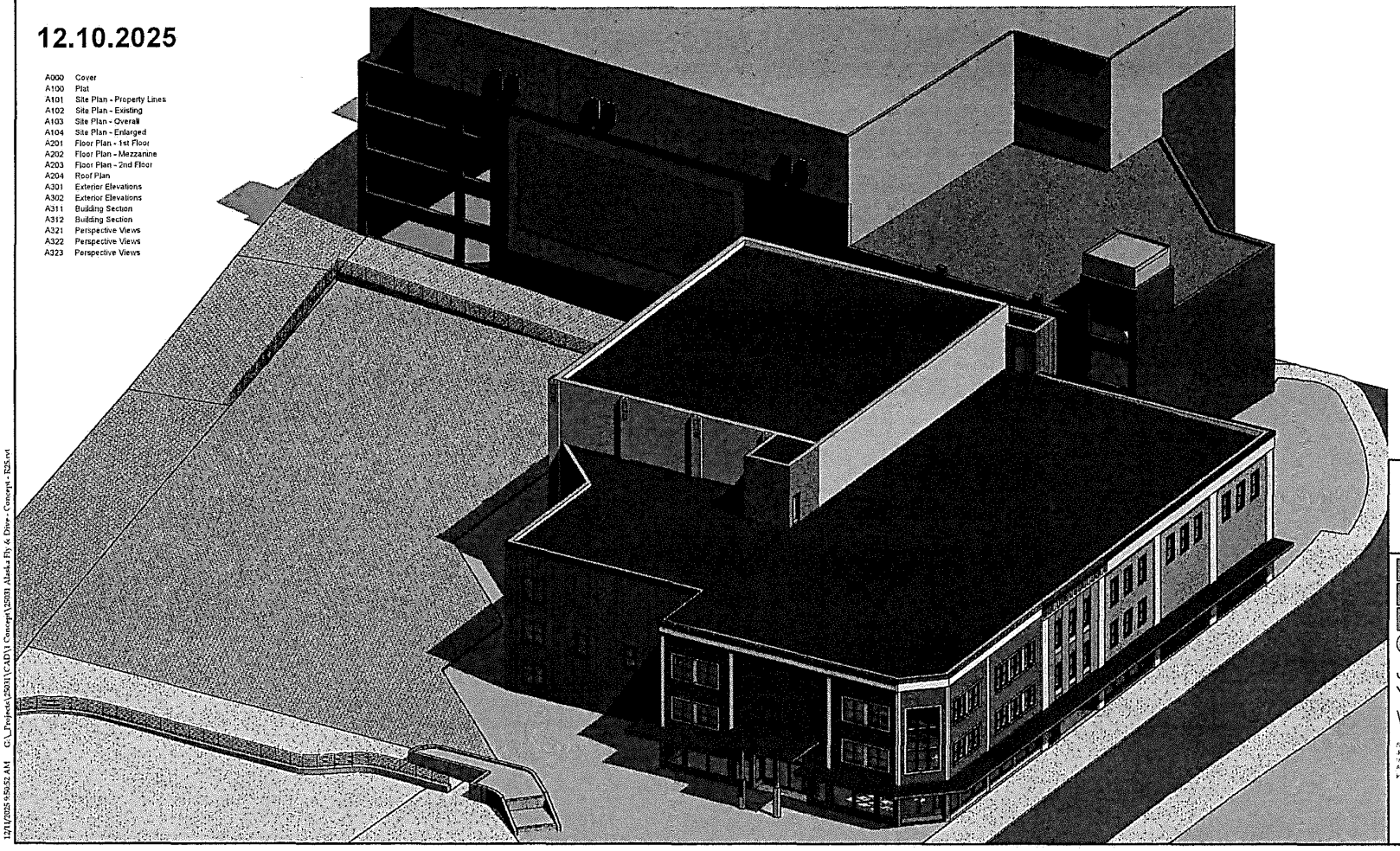

12/11/2025 9:50:52 AM G:_Projects\25031\CADD\Concept\25031 Alaska Fly & Dive - Concept - R25.rvt

Jensen Yorba Wall Inc.

FILE 25031

A000

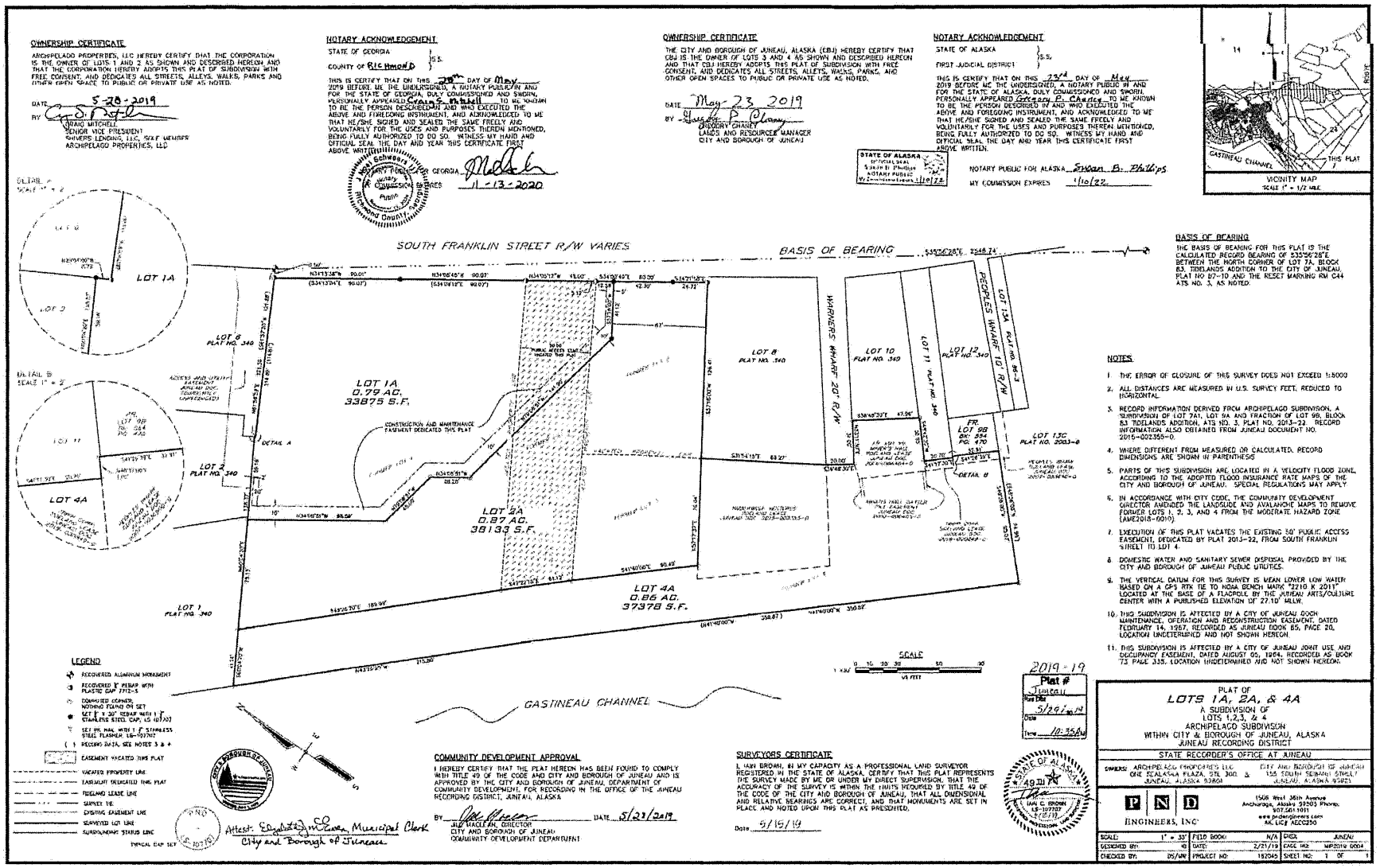

Attachment 8 - Subdivision Plat

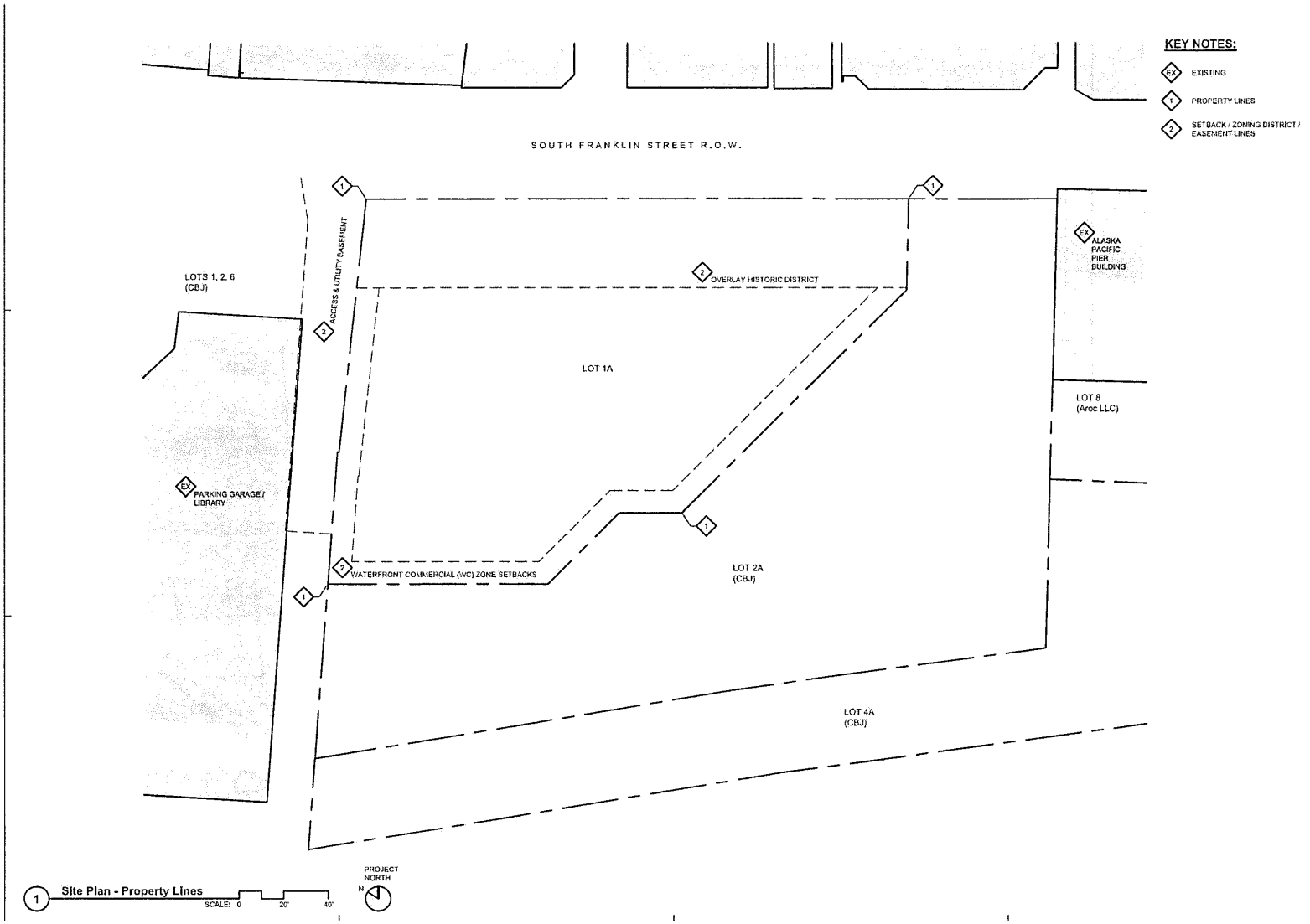

Jensen Yorba Wall Inc.

Alaska Fly & Dive

CU Permit Set

REVISIONS

SHEET TITLE
Site Plan - Property Lines

DATE: 12.19.2025
FILE: 25031

A101

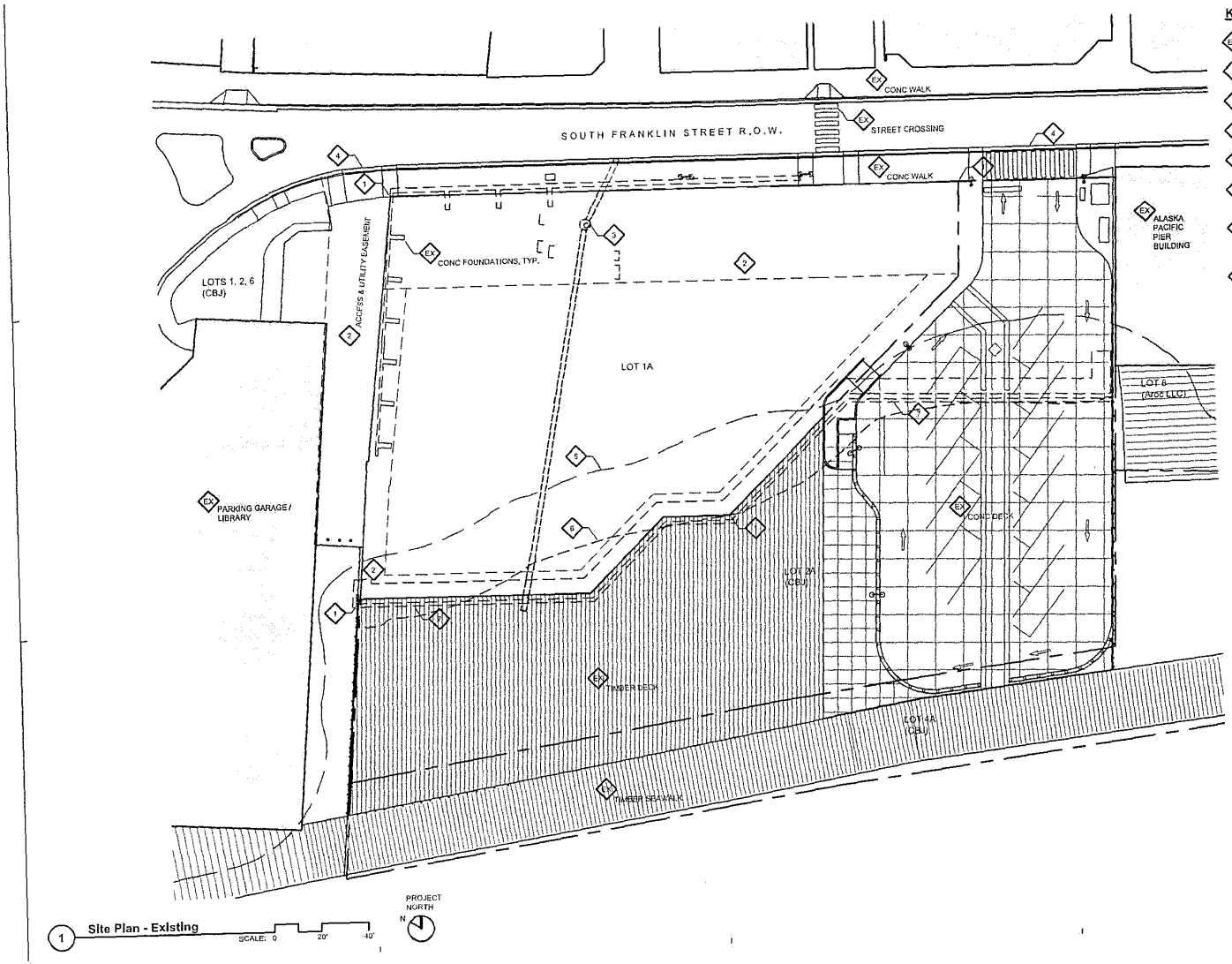

KEY NOTES:

- EX EXISTING
- 1 PROPERTY LINES
- 2 SETBACK / ZONING DISTRICT / EASEMENT LINES
- 3 STORM DRAIN TO BE REMOVED & RELOCATED
- 4 EXISTING DRIVEWAY ENTRANCE
- 5 FEMA FLOODPLAIN LIMIT (APPROX.) PRIOR TO RETAINING WALL. ZONE VE, ELEVATION 25'.
- 6 MEAN HIGH WATER LINE (MHW), PRIOR TO RETAINING WALL. ELEVATION 15.34'
- 7 PILE SUPPORTED CONCRETE RETAINING WALL BELOW ALONG SOUTH OF LOT 1A. TOP OF WALL 27.17' TO 28.53'. BFE CONTOUR (25') AND MHW CONTOUR (15.34') NOW AT FACE OF WALL.

Jensen Yorba Wall Inc.
522 West 10th Street
Juneau, Alaska 99801
907.586.1070
ABC5127
jensenyorbawall.com

Alaska Fly & Dive

CU Permit Set

REVISIONS

SHEET TITLE
Site Plan - Existing

DATE: 12.10.2025
FILE: 25013

A102

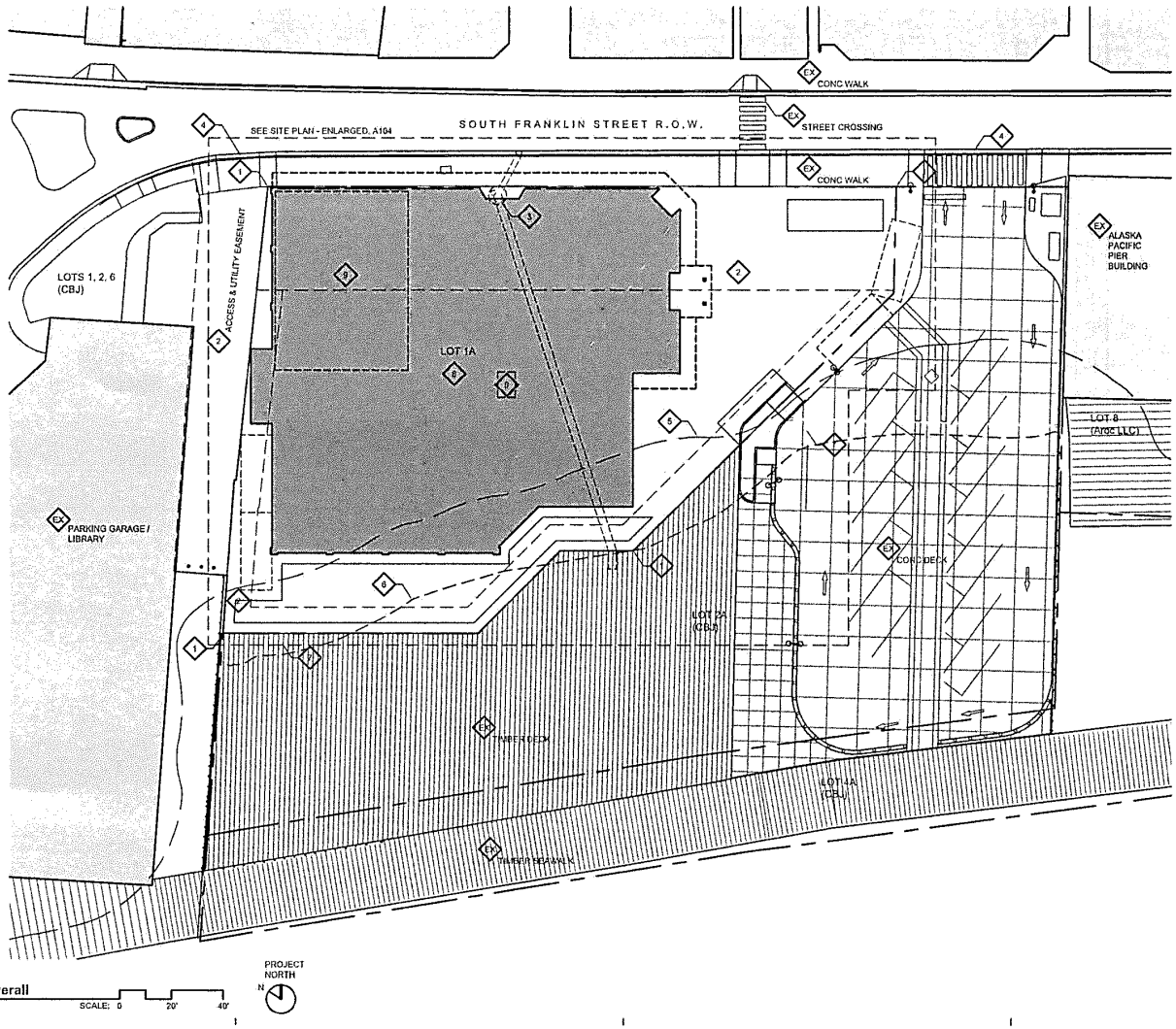

1 Site Plan - Overall

SCALE: 0 20' 40'

KEY NOTES:

- EX EXISTING
- 1 PROPERTY LINES
- 2 SETBACK / ZONING DISTRICT / EASEMENT LINES
- 3 STORM DRAIN TO BE REMOVED & RELOCATED
- 4 EXISTING DRIVEWAY ENTRANCE
- 5 FEMA FLOODPLAIN LIMIT (APPROX.) PRIOR TO RETAINING WALL. ZONE VE. ELEVATION 25'.
- 6 MEAN HIGH WATER LINE (MHW). PRIOR TO RETAINING WALL. ELEVATION 15.34'
- 7 PILE SUPPORTED CONCRETE RETAINING WALL BELOW ALONG SOUTH OF LOT 1A. TOP OF WALL 27.17' TO 28.53'. BFE CONTOUR (25') AND MHW CONTOUR (15.34') NOW AT FACE OF WALL.
- 8 ALASKA FLY & DIVE BUILDING, FINISHED FLOOR ELEVATION 28.5'
- 9 THEATER FLOOR AND ELEVATOR PIT, FINISHED FLOOR ELEVATION 23.5'

Jensen Yorba Wall Inc.
622 West 10th Street
Jackson, Alaska 99801
907.586.1070
AECC137
jensenyorbawall.com

Alaska Fly & Dive

CU Permit Set

REVISIONS

SHEET TITLE
Site Plan - Overall

DATE: 12.10.2025
FILE: 25001

A103

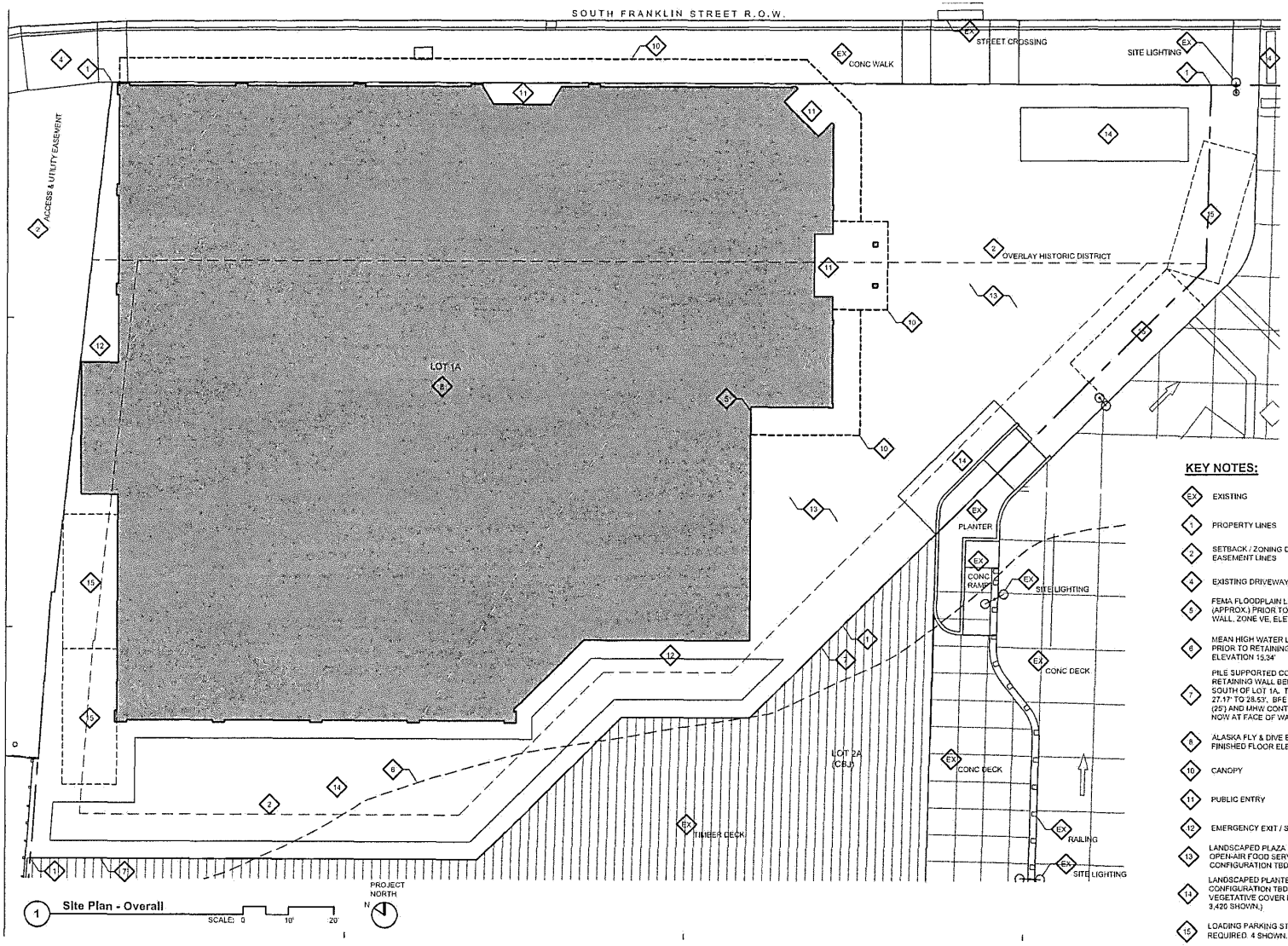

KEY NOTES:

- EX — EXISTING
- 1 — PROPERTY LINES
- 2 — SETBACK / ZONING DISTRICT / EASEMENT LINES
- 4 — EXISTING DRIVEWAY ENTRANCE
- 5 — FEMA FLOODPLAIN LIMIT (APPROX.) PRIOR TO RETAINING WALL, ZONE VE, ELEVATION 25'.
- 6 — MEAN HIGH WATER LINE (MHW), PRIOR TO RETAINING WALL, ELEVATION 15.34'
- 7 — PILE SUPPORTED CONCRETE RETAINING WALL BELOW ALONG SOUTH OF LOT 1A. TOP OF WALL 27.17' TO 28.53'. BFE CONTOUR (25') AND MHW CONTOUR (15.34') NOW AT FACE OF WALL.
- 8 — ALASKA FLY & DIVE BUILDING, FINISHED FLOOR ELEVATION 28.5'
- 10 — CANOPY
- 11 — PUBLIC ENTRY
- 12 — EMERGENCY EXIT / STAFF ENTRY
- 13 — LANDSCAPED PLAZA AND FUTURE OPEN-AIR FOOD SERVICE, CONFIGURATION TBD
- 14 — LANDSCAPED PLANTER, CONFIGURATION TBD. (3,389 SF VEGETATIVE COVER REQUIRED. 3,420 SHOWN.)
- 15 — LOADING PARKING STALL. (NONE REQUIRED. 4 SHOWN.)

Jensen Yorba Wall Inc.
522 West 10th Street
Juneau, Alaska 99801
907.586.1070
AECC127
jensenyorbawall.com

Alaska Fly & Dive

CU Permit Set

REVISIONS

~~Site Plan~~ Enlarged

DATE: 12.19.2023
FILE: 23031

A104

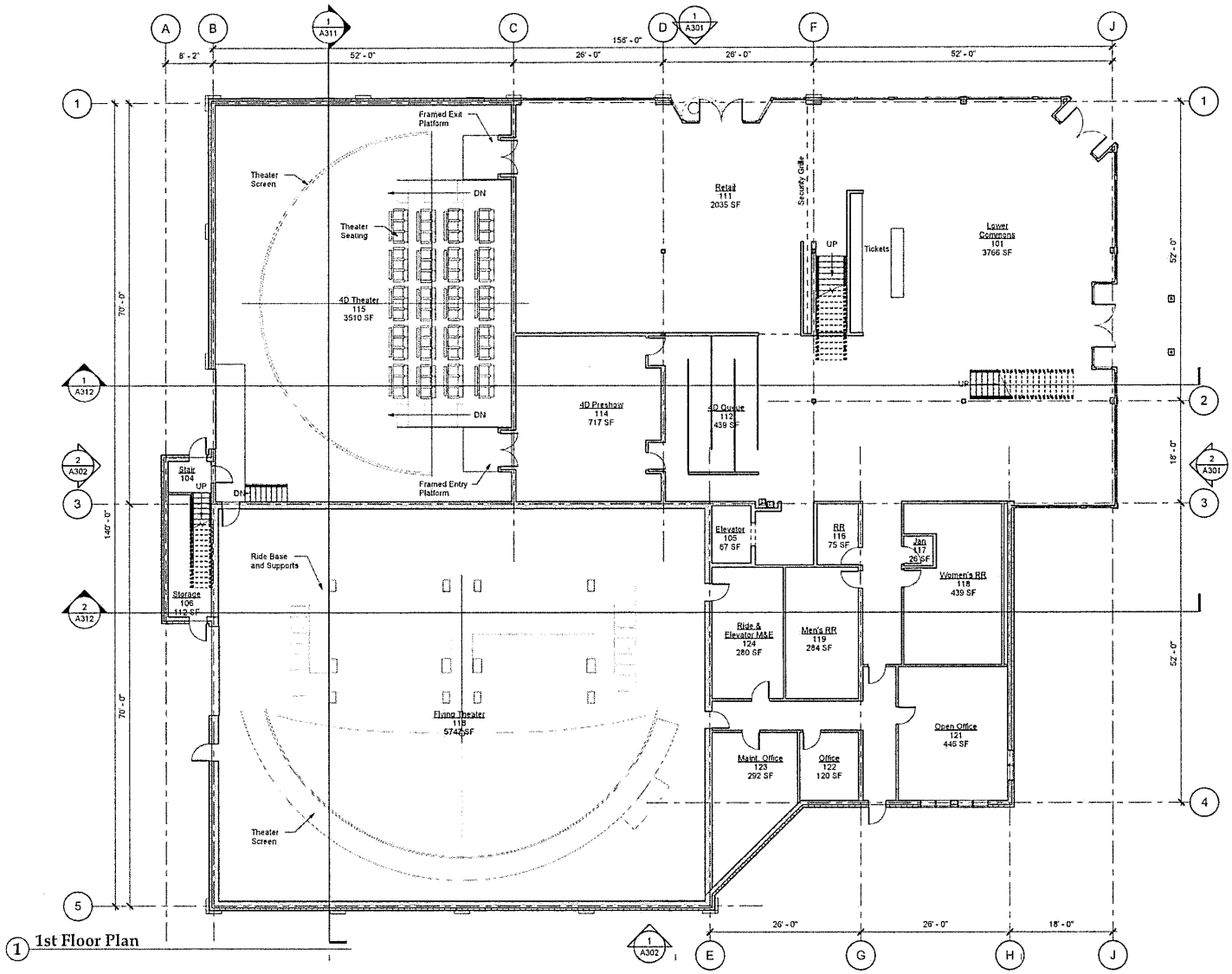

1 1st Floor Plan

Jensen Yorba Wall Inc.

Alaska Fly & Dive

CU Permit Set

REVISIONS

SHEET TITLE
Floor Plan - 1st Floor

DATE 12.10.2025
FILE 25031

A201

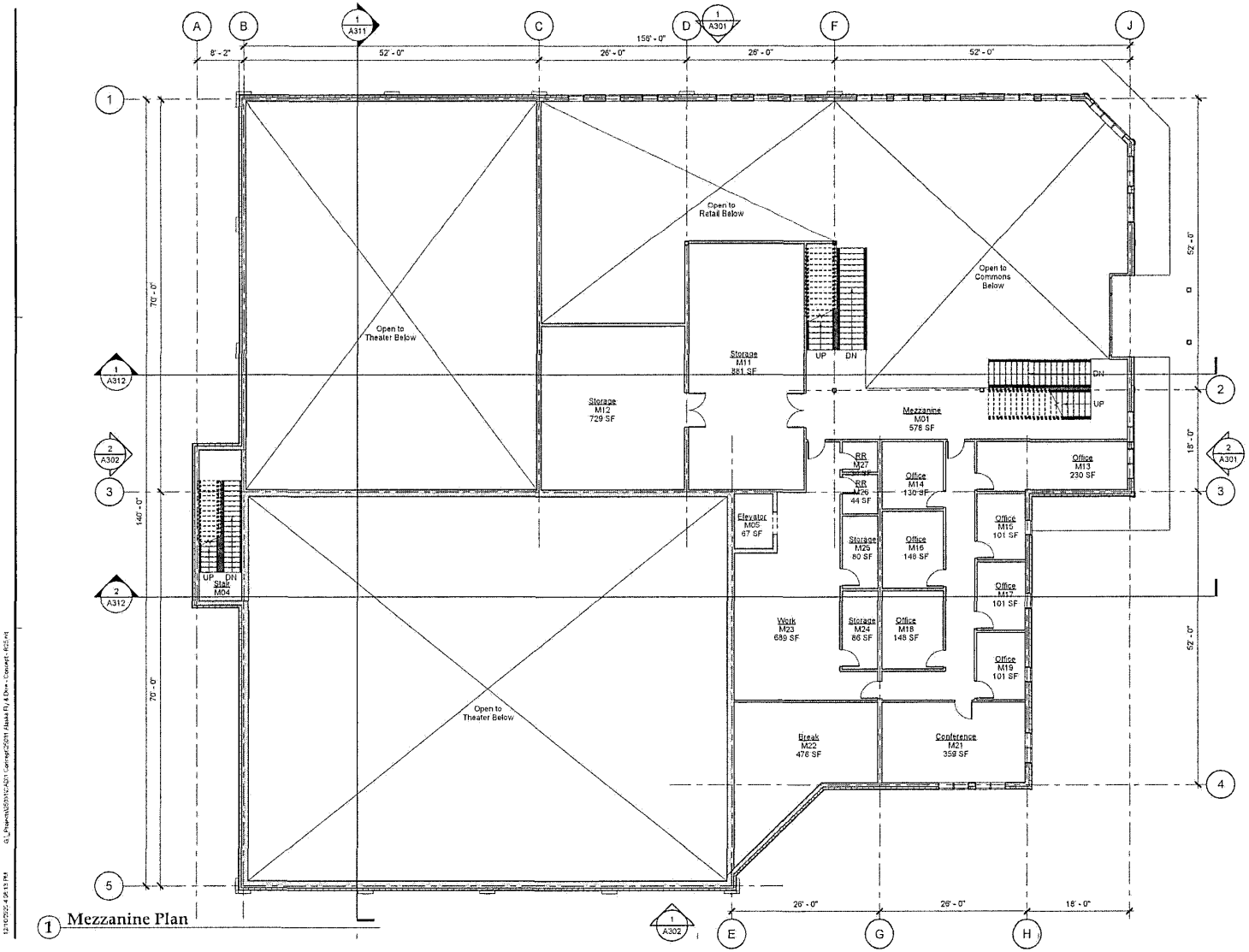

1 Mezzanine Plan

Jensen Yorba Wall Inc.

Alaska Fly & Dive

CU Permit Set

REVISIONS

SHEET TITLE
Floor Plan - Mezzanine

DATE 12.10.2025
FILE 25031

A202

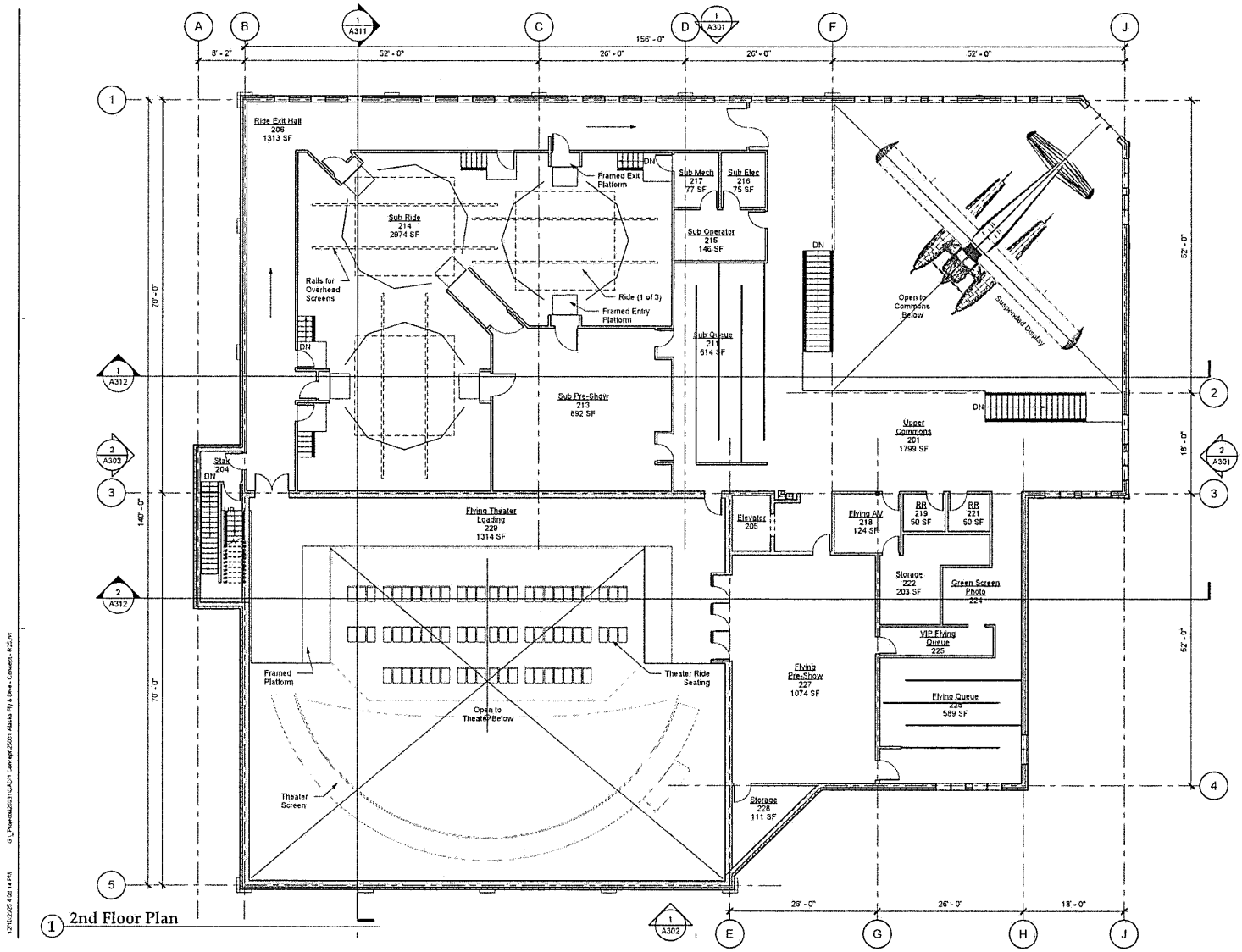

1 2nd Floor Plan

Jensen Yorba Wall Inc.

Alaska Fly & Dive

CU Permit Set

REVISIONS

SHEET TITLE
Floor Plan - 2nd Floor

DATE 12.10.2025
FILE 25031

A203

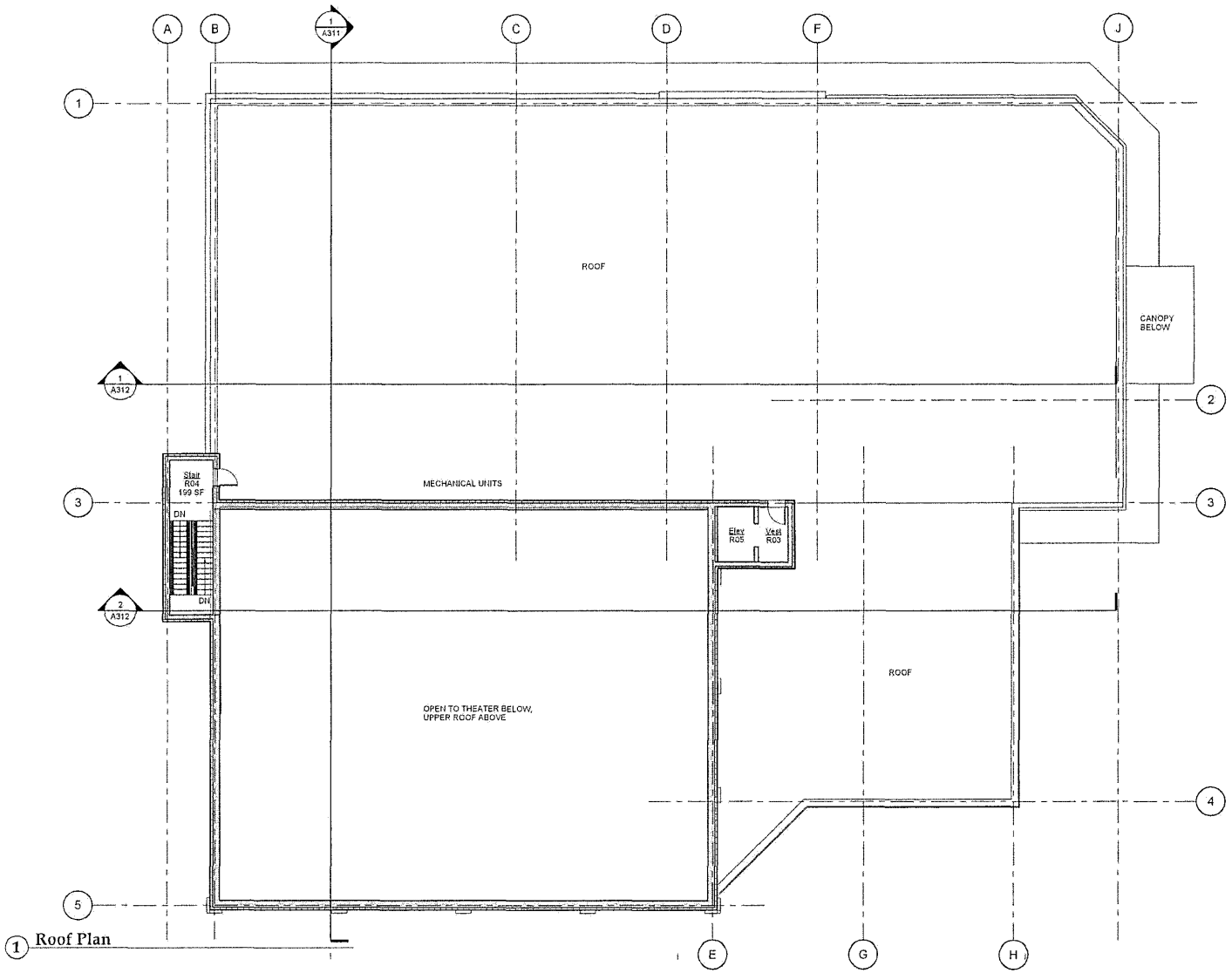

1 Roof Plan

Jensen Yorba Wall Inc.

Alaska Fly & Dive

CU Permit Set

REVISIONS

SHEET TITLE
Roof Plan

DATE 12.16.2025
FILE 25031

A204

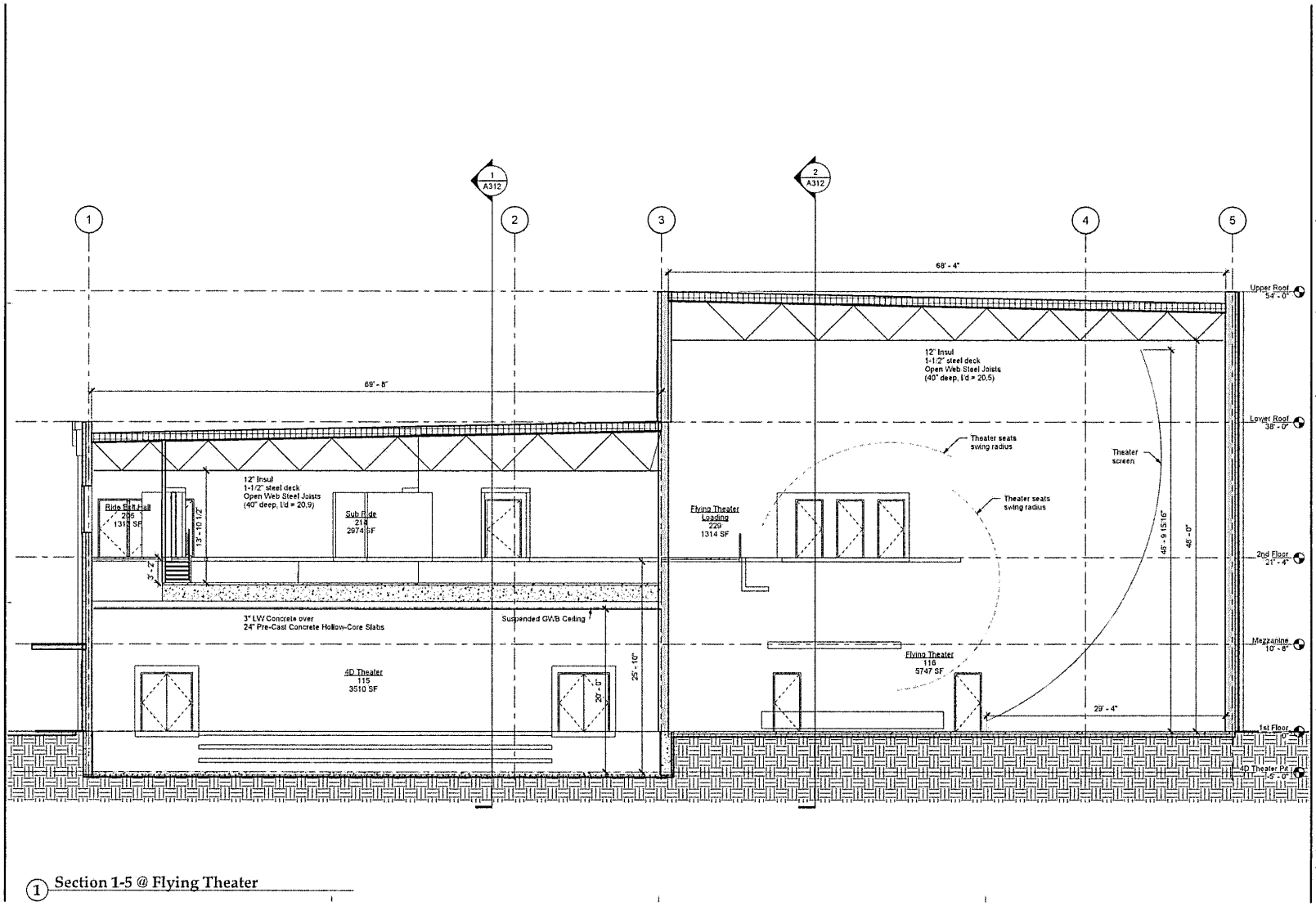

1 Section 1-5 @ Flying Theater

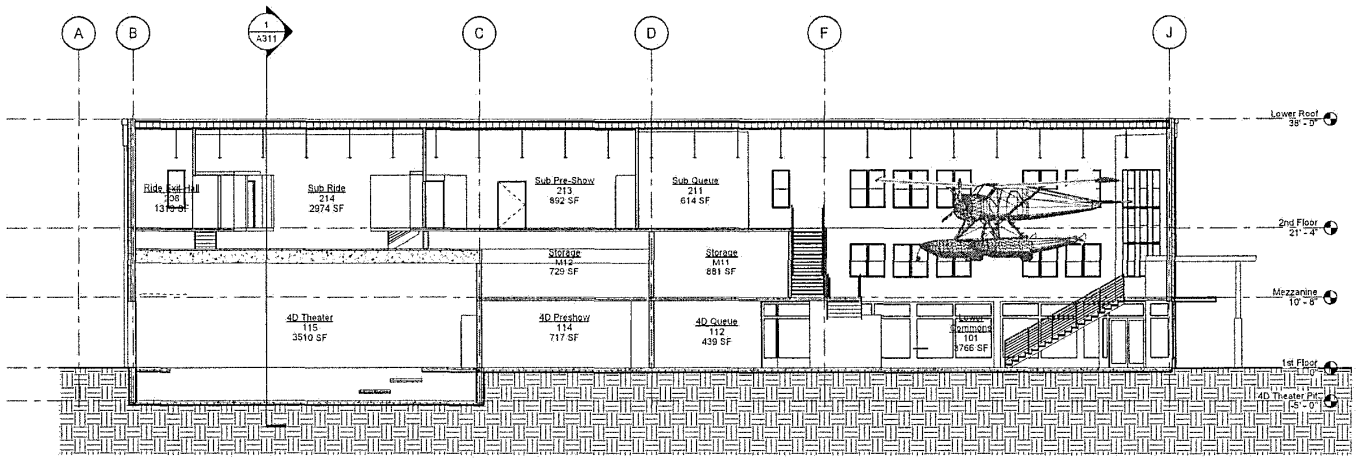

1 Section A-J @ Commons

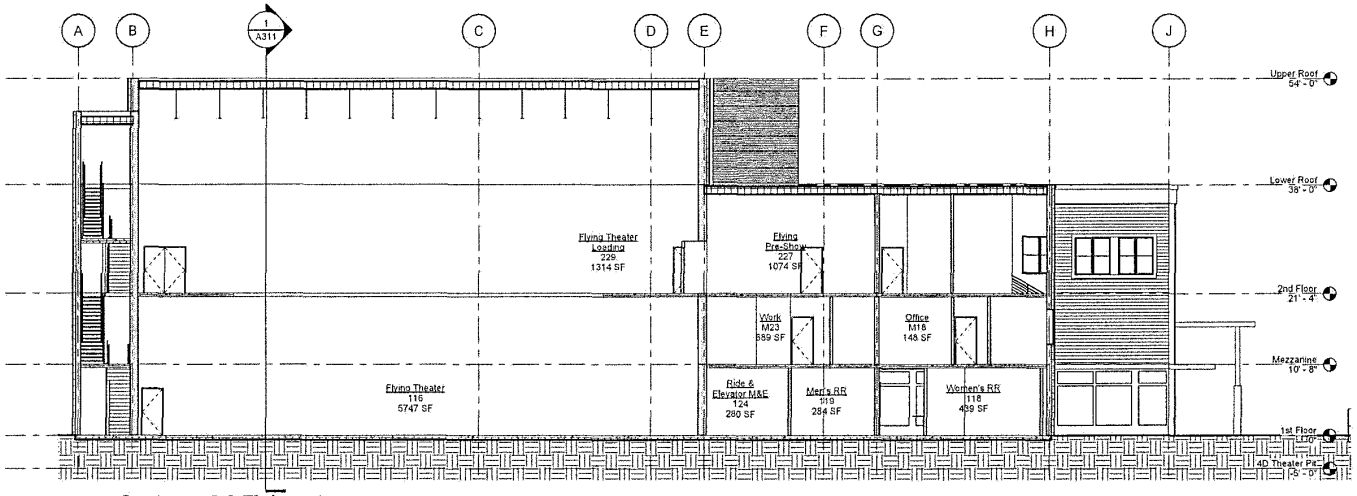

2 Section A-J @ Flying Theater

Jensen Yorba Wall Inc.

Alaska Fly & Dive

CU Permit Set

REVISIONS

SHEET TITLE
Building Section

DATE 12.10.2025
FILE 25031

A312

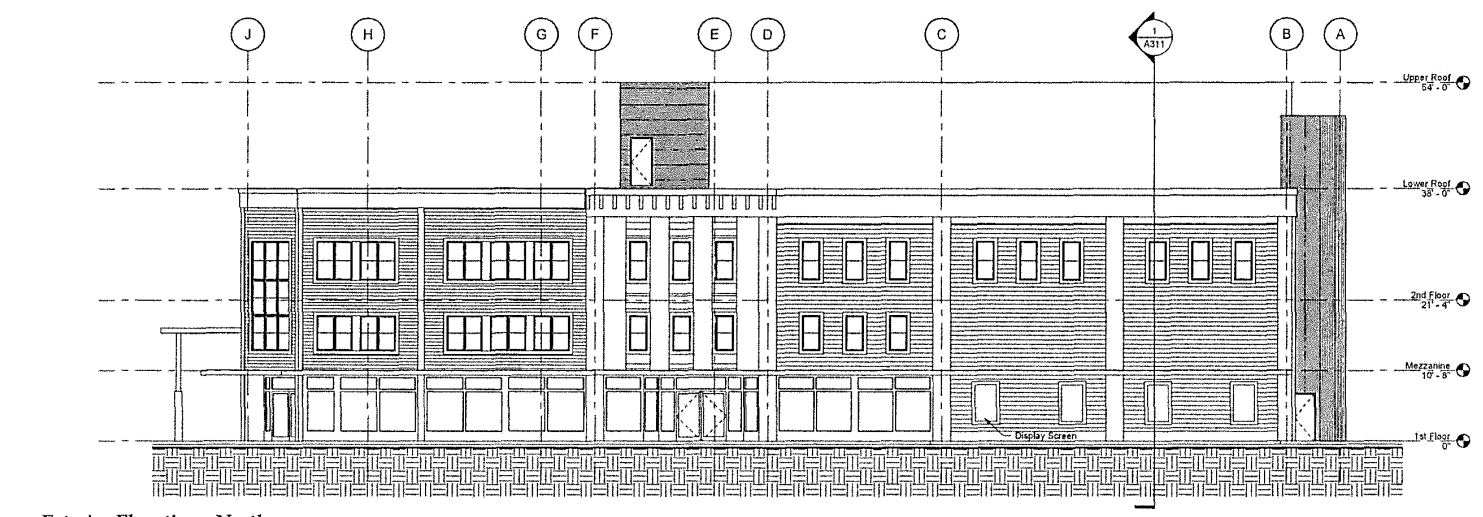

1 Exterior Elevation - North

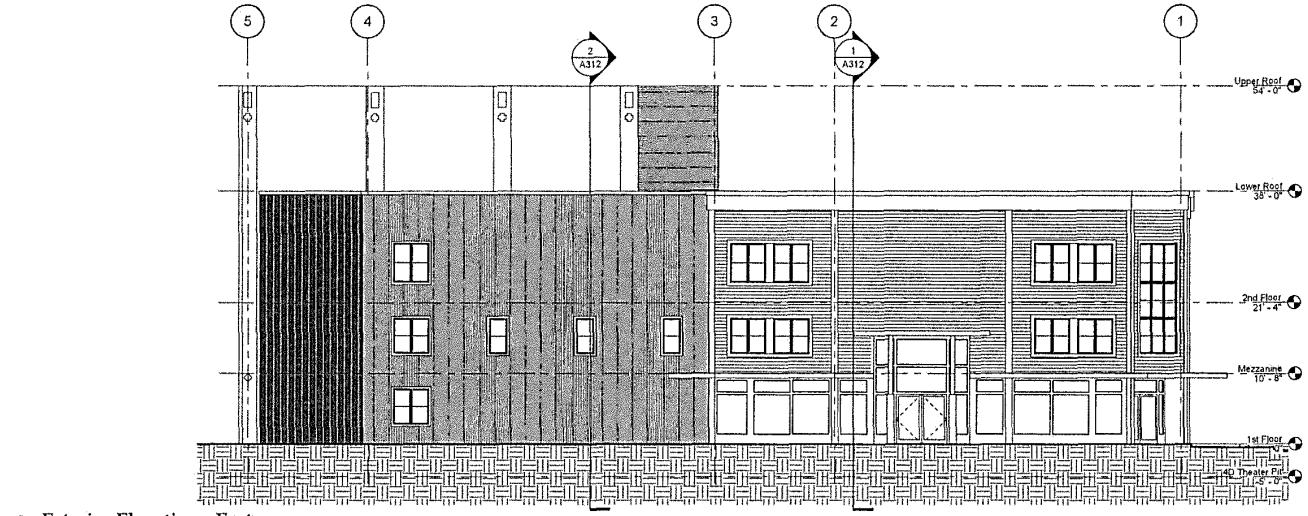

2 Exterior Elevation - East

Jensen Yorba Wall Inc.

Alaska Fly & Dive

CU Permit Set

REVISIONS

SHEET TITLE
Exterior Elevations

DATE 12.16.2025
FILE 25031

A301

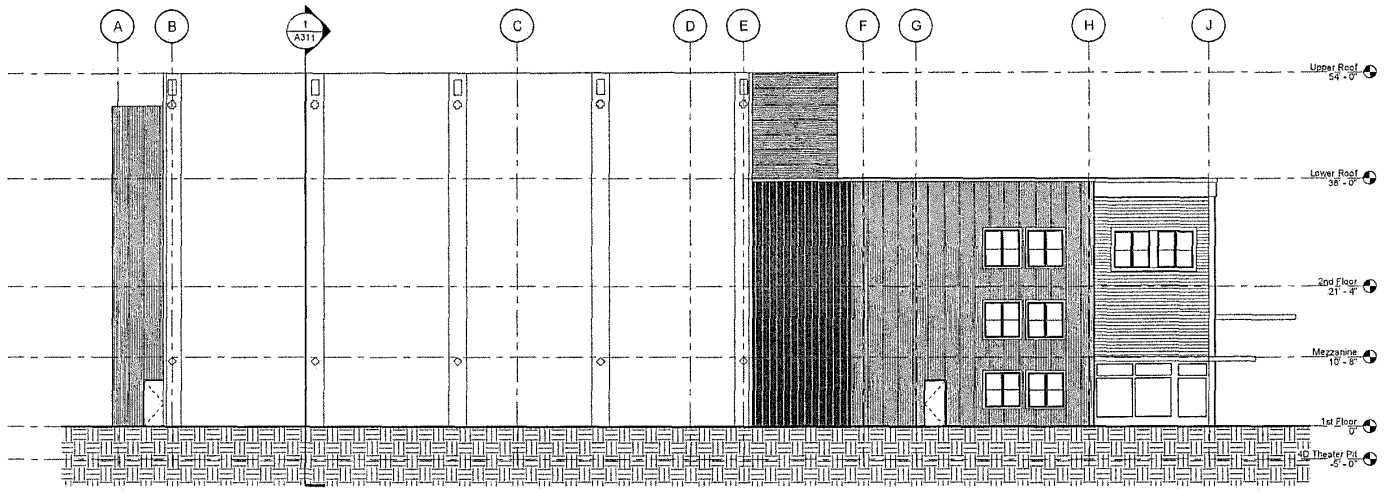

1 Exterior Elevation - South

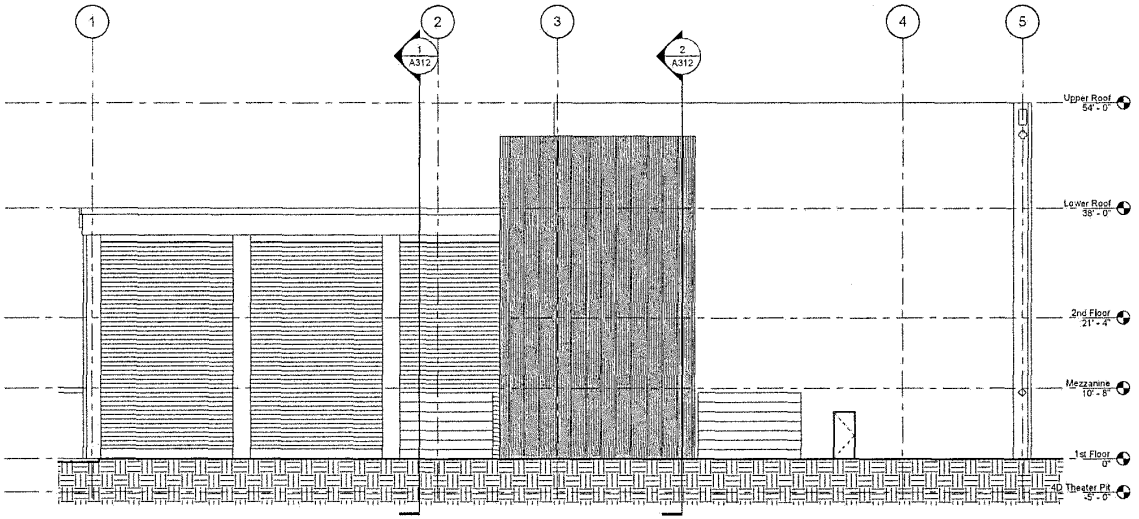

2 Exterior Elevation - West

Jensen Yorba Wall Inc.

Alaska Fly & Dive

CU Permit Set

REVISIONS

SHEET TITLE
Exterior Elevations

DATE 12.10.2025
FILE 25031

A302

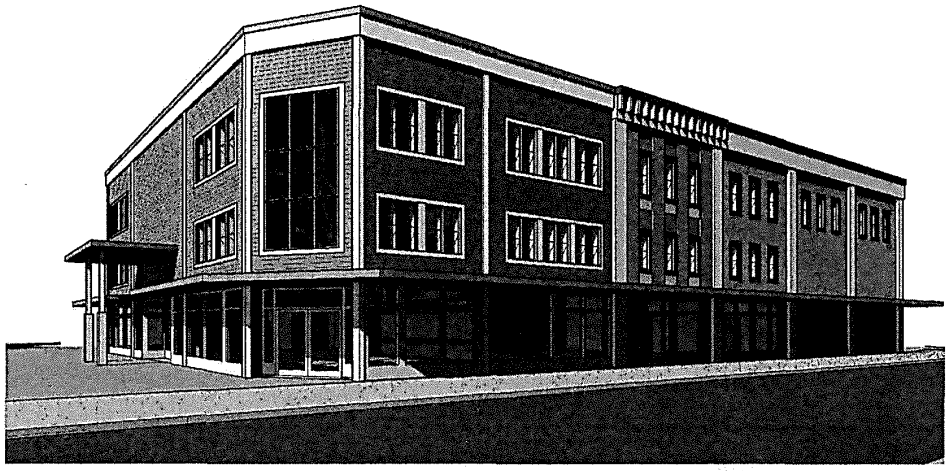

1 Perspective - Franklin Street Crosswalk COLORS TBD



2 Perspective - Franklin Street @ Pier 49 COLORS TBD

Jensen Yorba Wall Inc.

Alaska Fly & Dive

CU Permit Set

REVISIONS

SHEET TITLE
Perspective Views

DATE 12.10.2025
FILE 25031

A321

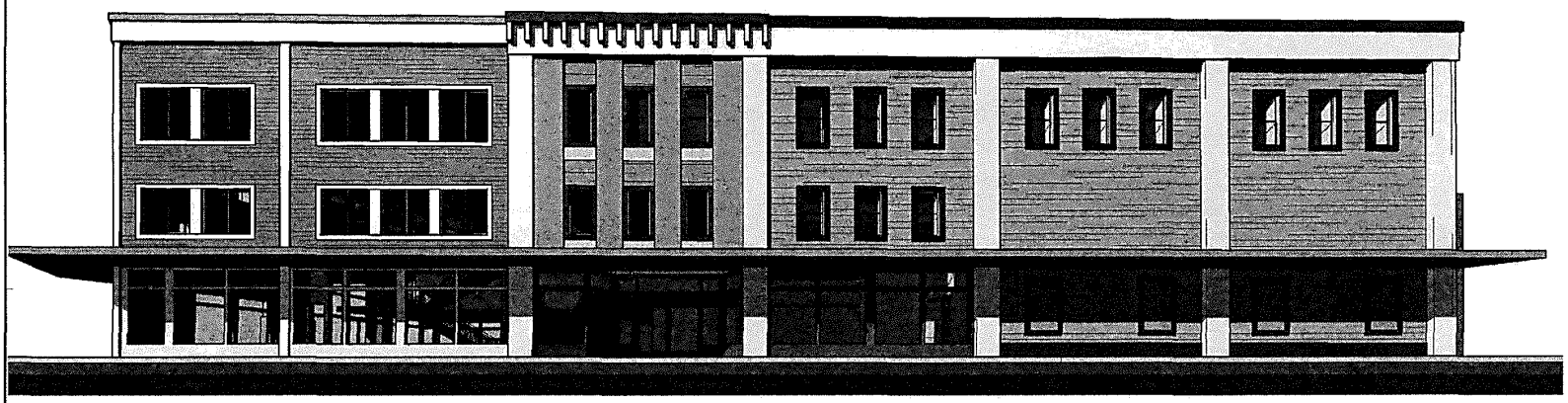

1 Perspective - Across Franklin Street COLORS TBD

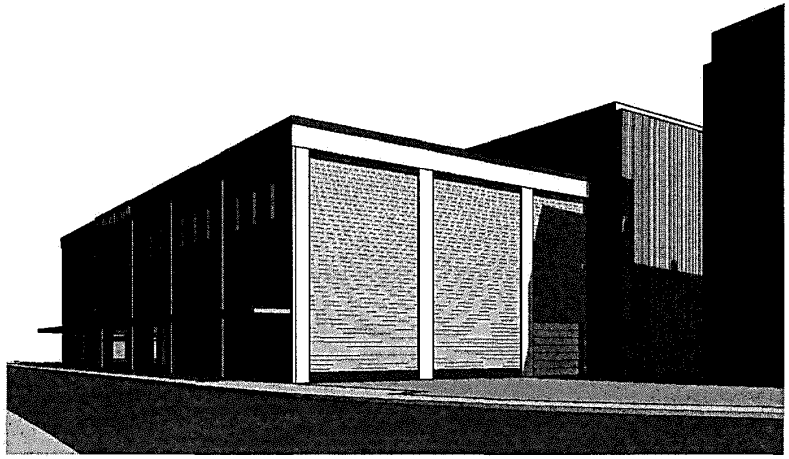

2 Perspective - North Franklin Street COLORS TBD

Jensen Yorba Wall Inc.

Alaska Fly & Dive

CU Permit Set

REVISIONS

SHEET TITLE
Perspective Views

DATE 12.10.2025
FILE 25031

A322

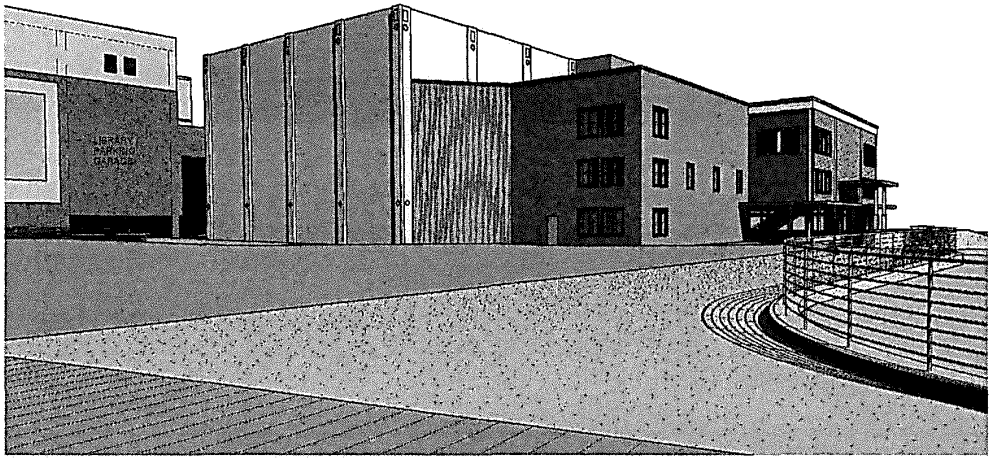

1 Perspective - Seawalk South COLORS TBD

Jensen Yorba Wall Inc.

Alaska Fly & Dive

CU Permit Set

REVISIONS

SHEET TITLE
Perspective Views

DATE 12.16.2025
FILE 25031

A323

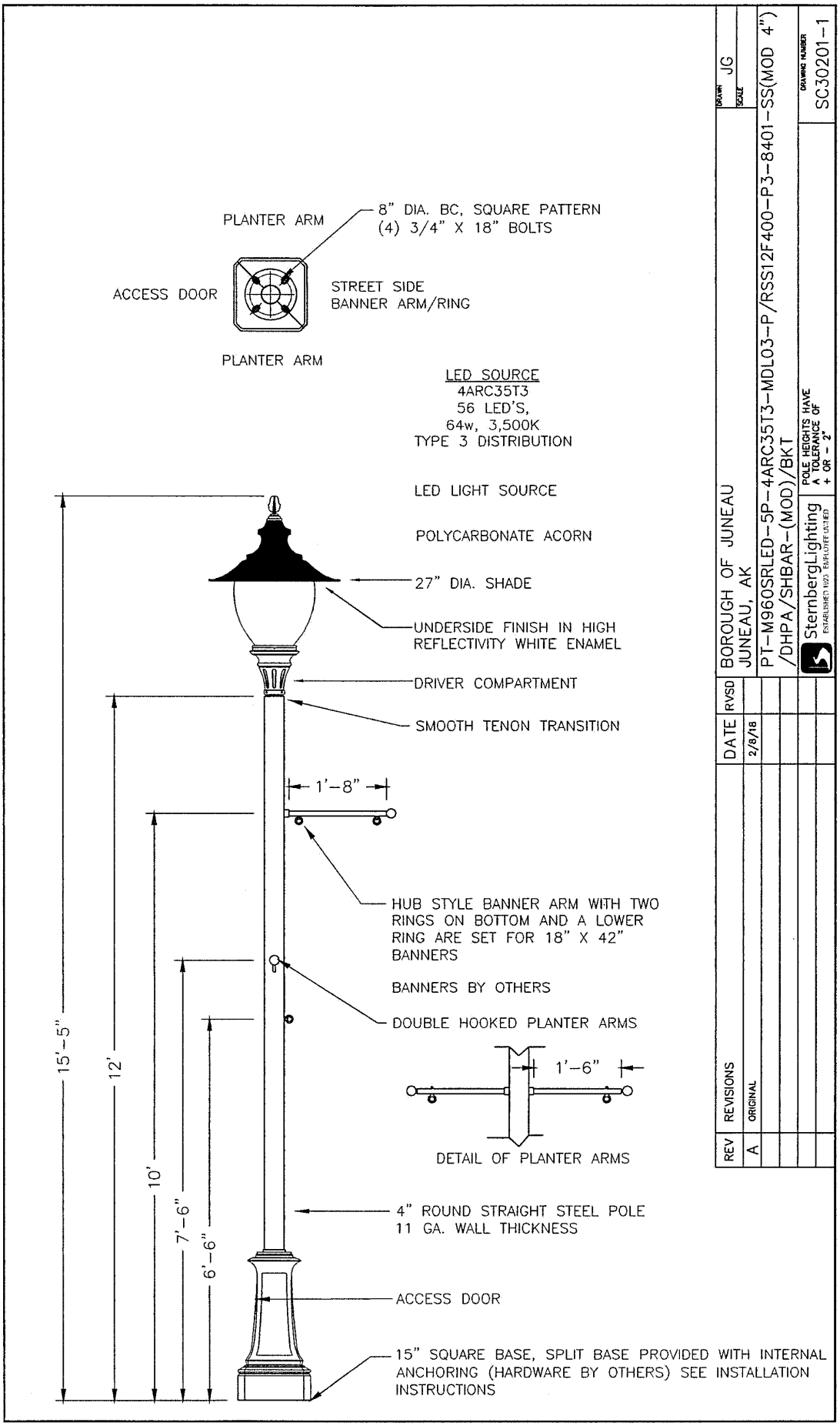
PLANTER ARM
8" DIA. BC, SQUARE PATTERN
(4) 3/4" X 18" BOLTS
ACCESS DOOR
STREET SIDE
BANNER ARM/RING
PLANTER ARM
LED SOURCE
4ARC35T3
56 LED'S,
64w, 3,500K
TYPE 3 DISTRIBUTION
LED LIGHT SOURCE
POLYCARBONATE ACORN
27" DIA. SHADE
UNDERSIDE FINISH IN HIGH REFLECTIVITY WHITE ENAMEL
DRIVER COMPARTMENT
SMOOTH TENON TRANSITION
1'-8"
HUB STYLE BANNER ARM WITH TWO RINGS ON BOTTOM AND A LOWER RING ARE SET FOR 18" X 42" BANNERS
BANNERS BY OTHERS
DOUBLE HOOKED PLANTER ARMS
1'-6"
DETAIL OF PLANTER ARMS
15'-5"
12'
10'
7'-6"
6'-6"
4" ROUND STRAIGHT STEEL POLE
11 GA. WALL THICKNESS
ACCESS DOOR
15" SQUARE BASE, SPLIT BASE PROVIDED WITH INTERNAL ANCHORING (HARDWARE BY OTHERS) SEE INSTALLATION INSTRUCTIONS
REV
REVISIONS
DATE
RVSD
A
ORIGINAL
2/8/18
BOROUGH OF JUNEAU
JUNEAU, AK
PT-M960SRLED-5P-4ARC35T3-MDL03-P/RSS12F400-P3-8401-SS(MOD 4")
/DHPA/SHBAR-(MOD)/BKT
SternbergLighting
ESTABLISHED 1920 EMPLOYEE OWNED
POLE HEIGHTS HAVE A TOLERANCE OF + OR - 2"
DRAWN JG
SCALE
DRAWING NUMBER
SC30201-1

UAA-10087
Atlantic 1 Bollard

LIGMAN LIGHTING USA

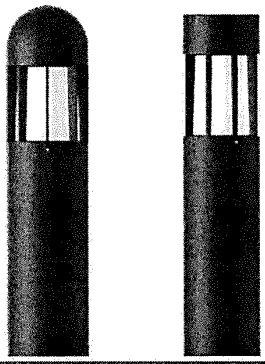

41w COB - 1454 Lumens | 29w COB 1028 Lumens
IP65 • Suitable For Wet Locations
IK08 • Impact Resistant (Vandal Resistant)
Weight 15 lbs

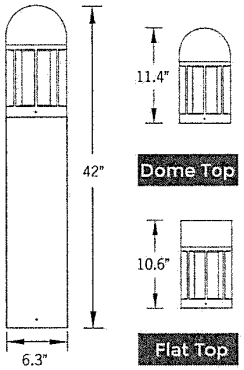

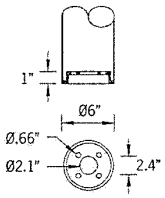

Mounting Detail

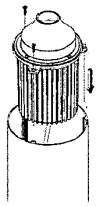

IP65 - Internal top access driver housing, prewired with SO cord and waterproof cable gland for easy installation.

Construction

Aluminum
Less than 0.1% copper content – Marine Grade 6060 extruded & LM6 Aluminum High Pressure die casting provides excellent mechanical strength , clean detailed product lines and excellent heat dissipation.

Pre paint
8 step degrease and phosphate process that includes deoxidizing and etching as well as a zinc and nickel phosphate process before product painting.

Memory Retentive -Silicon Gasket
Provided with special injection molded "fit for purpose" long life high temperature memory retentive silicon gaskets. Maintains the gaskets exact profile and seal over years of use and compression.

Thermal management
LM6 Aluminum is used for its excellent mechanical strength and thermal dissipation properties in low and high ambient temperatures. The superior thermal heat sink design by Ligman used in conjunction with the driver, controls thermals below critical temperature range to ensure maximum luminous flux output, as well as providing long LED service life and ensuring less than 10% lumen depreciation at 50,000 hours.

Surge Suppression
Standard 10kv surge suppressor provided with all fixtures.

BUG Rating
B1 - U3 -G1 [W30] • B1 - U4 - G1 [W40]

Finishing
All Ligman products go through an extensive finishing process that includes fettling to improve paint adherence.

Paint
UV Stabilized 4.9Mil thick powder coat paint and baked at 200 Deg C. This process ensures that Ligman products can withstand harsh environments. Rated for use in natatoriums.

Inspired by Nature Finishes
The Inspired by nature Finishing is a unique system of decorative powder coating. Our metal decoration process can easily transform the appearance of metal or aluminum product into a wood grain finish.

This patented technology enables the simulation of wood grain, and even marble or granite finish through the use of decorative powder coating.

The wood grain finish is so realistic that it's almost undistinguishable from real wood, even from a close visual inspection. The system of coating permeates the entire thickness of the coat and as a result, the coating cannot be removed by normal rubbing, chipping, or scratching.

The Coating Process
After pre-treatment the prepared parts are powder coated with a specially formulated polyurethane powder. This powder provides protection against wear, abrasion, impact and corrosion and acts as the relief base color for the finalized metal decoration.

The component is then wrapped with a sheet of non-porous film with the selected decoration pattern printed on it using special high temperature inks.

This printed film transfer is vacuum-sealed to the surface for a complete thermo print and then transferred into a customized oven. The oven transforms the ink into different forms within the paint layer before it becomes solid. Finally, the film is removed, and a vivid timber look on aluminum remains.

Wood grain coating can create beautiful wood-looking products of any sort. There are over 300 combinations of designs currently in use. Wood grains can be made with different colors, designs, etc.

Our powder coatings are certified for indoor and outdoor applications and are backed by a comprehensive warranty. These coatings rise to the highest conceivable standard of performance excellence and design innovation.

Added Benefits
- Resistance to salt-acid room, accelerated aging
- Boiling water, lime and condensed water resistant
- Anti-Graffiti, Anti-Slip, Anti-Microbial, Anti-Scratch
- Super durable (UV resistant)
- TGIC free (non-toxic)

Hardware
Provided Hardware is Marine grade 316 Stainless steel.

Anti Seize Screw Holes
Tapped holes are infused with a special anti seize compound designed to prevent seizure of threaded connections, due to electrolysis from heat, corrosive atmospheres and moisture.

Opal Borosilicate Glass Lens
Provided with opal borosilicate impact resistant glass.

Optics & LED
Precise optic design provides exceptional light control and precise distribution of light.
LED CRI > 80

Lumen - Maintenance Life
L80 /B10 at 50,000 hours (This means that at least 90% of the LED still achieve 80% of their original flux)

Classic urban neighborhood bollard luminaire family. Timeless lines coupled with unparalleled build quality, flexibility and performance.

A decorative bollard with a symmetrical light distribution. Developed to complement the Atlantic range of pillar lights, post top and wall light luminaires. Designed for various applications including entrances, gardens, precincts and pathways.

Low copper content corrosion resistant extruded die-cast aluminum column. 316 Stainless steel hardware, durable silicone rubber gasket and impact resistant tempered opal diffuser. The luminaire is treated with a chemical nickel and zinc phosphate protection before powder coating (4.9 mil thickness), ensuring high corrosion resistance. Integral control gear.

This fixture is provided with an integrated waterproof driver box at the top of the bollard that ensures that the electrical components are protected from water and dust. This fixture is prewired to the base of the bollard facilitated easy electrical connections onsite. A laser cut anchor bolt template is provided for accurate anchor bolt installation.Options of house side shields and GFCI boxes are available.
Please contact the factory for more information.

Security Bollard:
This product can be modified with optional Security Bollard cores. Ligman has **two** security bollard options designed to deter unauthorized vehicular access in restricted areas.
Ligman **Standard Security Bollards [SB]**are structurally engineered and simulated to meet the performance criteria of a typical traffic-rated bollard system, which corresponds to a 5,000 lb vehicle impact up to 30mph with less than 4ft of penetration.
Ligman **Reinforced Security Bollards [RSB]**are structurally engineered for impact resistance and simulated to meet the performance criteria of ASTM F2656 M30 P1 (formerly known as K4), which corresponds to a 15,000 lb vehicle impact up to 30mph with less than 3.3 ft of penetration.
These bollards are not certified as crash-rated.
Please refer to the product installation sheet for additional requirements and installation guidelines.

Additional Options (Consult Factory For Pricing)

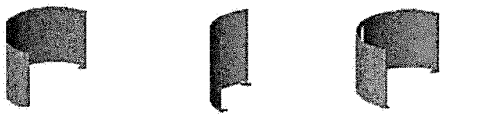

180
Asymmetrical 180° Emission

90
Asymmetrial 90°+ 90° Emission

180L
Asymmetrical 180° with Lightblade

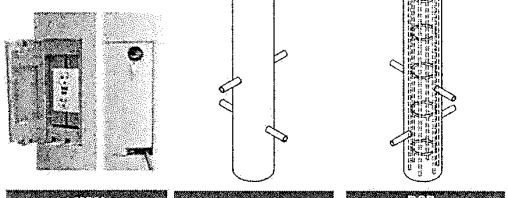

A91591
Lockable In Use GFCI Receptacle Outlet Box

SB
Security Bollard

RSB
Reinforced Security Bollard

Ligman Lighting USA reserves the right to change specifications without prior notice, please contact factory for latest information. Due to the continual improvements in LED technology data and components may change without notice

UAA-10087
Atlantic 1 Bollard

LIGMAN LIGHTING USA

PROJECT		DATE	
QUANTITY		TYPE		NOTE	

ORDERING EXAMPLE || UAA-10087-41w - 1 - W30 - 01 - 120/277v

UAA-10087					
	LAMP	TOP	LED COLOR	FINISH COLOR	VOLTAGE

LAMP
- 41w COB
  1454 Lumens
- 29w COB
  1028 Lumens

TOP
- 1 - Dome Top
- 2 - Flat Top



LED COLOR
- W27 - 2700K
- W30 - 3000K
- W35 - 3500K
- W40 - 4000K

FINISH COLOR
- 01 - BLACK RAL 9011
- 02 - DARK GREY RAL 7043
- 03 - WHITE RAL 9003
- 04 - METALLIC SILVER RAL 9006
- 05 - MATTE SILVER RAL 9006
- 06 - LIGMAN BRONZE
- 07 - CUSTOM RAL

THERE IS AN ADDITIONAL COST FOR CUSTOM COLORS

INSPIRED BY NATURE FINISHES
- SW01 - OAK FINISH
- SW02 - WALNUT FINISH
- SW03- PINE FINISH
- DF - DOUGLAS FIR FINISH
- CW - CHERRY WOOD FINISH
- NW - NATIONAL WALNUT FINISH
- SU01 - CONCRETE FINISH
- SU02 - SOFTSCAPE FINISH
- SU03 - STONE FINISH
- SU04 - CORTEN FINISH

THERE IS AN ADDITIONAL COST FOR INSPIRED BY NATURE FINISHES

VOLTAGE
- 120/277v
- Other - Specify

ADDITIONAL OPTIONS

- DIM - 0-10v Dimming
- NAT - Natatorium Rated
- SB - Standard Security Bollard (A12891)
- RSB - Reinforced Security Bollard (A12891-M)
- HGT - Custom Height
  (SPECIFY HEIGHT)
- 180 - 180° Emission
- 90 - 90°+ 90° Emission
- 180L - 180° Emission w/ Lightblade
- A91591 - Lockable In Use GFCI Receptacle Outlet Box



A91591
Lockable In Use GFCI
Receptacle Outlet Box

More Custom Finishes Available Upon Request

Consult factory for pricing and lead times

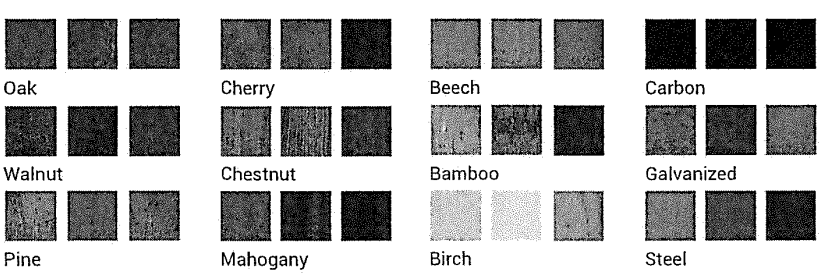

Oak · Cherry · Beech · Carbon
Walnut · Chestnut · Bamboo · Galvanized
Pine · Mahogany · Birch · Steel

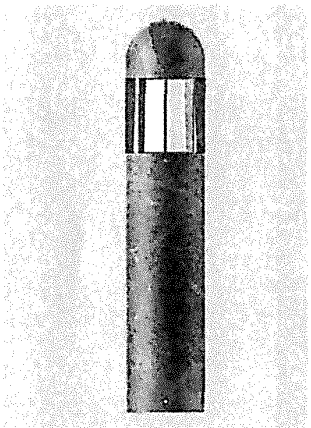

Example: Inspired by Nature Finish

Ligman Lighting USA reserves the right to change specifications without prior notice, please contact factory for latest information. Due to the continual improvements in LED technology data and components may change without notice

Intertek

UAA-30186

Atlantic 9 Medium Shade Shepherds Crook

LIGMAN LIGHTING USA

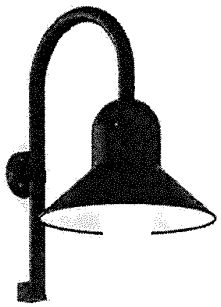

41w COB 2632 Lumens | 29w COB 1856 Lumens
IP55 • Suitable For Wet Locations
IK04 • Impact Resistant
Weight 20 lbs

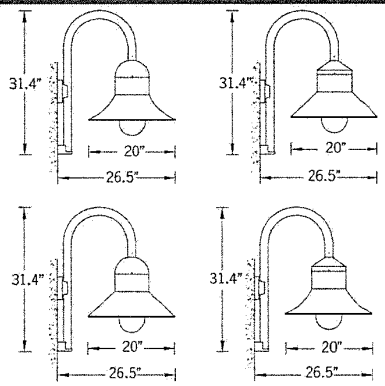

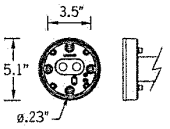

Mounting Detail

Construction

Aluminum
Less than 0.1% copper content – Marine Grade 6060 extruded & LM6 Aluminum High Pressure die casting provides excellent mechanical strength , clean detailed product lines and excellent heat dissipation.

Pre paint
8 step degrease and phosphate process that includes deoxidizing and etching as well as a zinc and nickel phosphate process before product painting.

Memory Retentive -Silicon Gasket
Provided with special injection molded "fit for purpose" long life high temperature memory retentive silicon gaskets. Maintains the gaskets exact profile and seal over years of use and compression.

Thermal management
LM6 Aluminum is used for its excellent mechanical strength and thermal dissipation properties in low and high ambient temperatures. The superior thermal heat sink design by Ligman used in conjunction with the driver, controls thermals below critical temperature range to ensure maximum luminous flux output, as well as providing long LED service life and ensuring less than 10% lumen depreciation at 50,000 hours.

Surge Suppression
Standard 10kv surge suppressor provided with all fixtures.

BUG Rating
B1 - U3 - G1

Finishing
All Ligman products go through an extensive finishing process that includes fettling to improve paint adherence.

Paint
UV Stabilized 4.9Mil thick powder coat paint and baked at 200 Deg C. This process ensures that Ligman products can withstand harsh environments. Rated for use in natatoriums.

Inspired by Nature Finishes
The Inspired by nature Finishing is a unique system of decorative powder coating. Our metal decoration process can easily transform the appearance of metal or aluminum product into a wood grain finish.

This patented technology enables the simulation of wood grain, and even marble or granite finish through the use of decorative powder coating.

The wood grain finish is so realistic that it's almost undistinguishable from real wood, even from a close visual inspection. The system of coating permeates the entire thickness of the coat and as a result, the coating cannot be removed by normal rubbing, chipping, or scratching.

The Coating Process
After pre-treatment the prepared parts are powder coated with a specially formulated polyurethane powder. This powder provides protection against wear, abrasion, impact and corrosion and acts as the relief base color for the finalized metal decoration.

The component is then wrapped with a sheet of non-porous film with the selected decoration pattern printed on it using special high temperature inks.

This printed film transfer is vacuum-sealed to the surface for a complete thermo print and then transferred into a customized oven. The oven transforms the ink into different forms within the paint layer before it becomes solid. Finally, the film is removed, and a vivid timber look on aluminum remains.

Wood grain coating can create beautiful wood-looking products of any sort. There are over 300 combinations of designs currently in use. Wood grains can be made with different colors, designs, etc.

Our powder coatings are certified for indoor and outdoor applications and are backed by a comprehensive warranty. These coatings rise to the highest conceivable standard of performance excellence and design innovation.

Added Benefits
- Resistance to salt-acid room, accelerated aging
- Boiling water, lime and condensed water resistant
- Anti-Graffiti, Anti-Slip, Anti-Microbial, Anti-Scratch
- Super durable (UV restant)
- TGIC free (non-toxic)

Hardware
Provided Hardware is Marine grade 316 Stainless steel.

Anti Seize Screw Holes
Tapped holes are infused with a special anti seize compound designed to prevent seizure of threaded connections, due to electrolysis from heat, corrosive atmospheres and moisture.

Opal Borosilicate Glass Lens
Provided with opal borosilicate impact resistant glass.

Optics & LED
Precise optic design provides exceptional light control and precise distribution of light.
LED CRI > 80

Lumen - Maintenance Life
L80 /B10 at 50,000 hours (This means that at least 90% of the LED still achieve 80% of their original flux)

Classic urban neighborhood wall-mounted luminaire family. Timeless lines coupled with unparalleled build quality, flexibility and performance.

A small and medium size shade decorative wall lantern with symmetrical light distribution. Developed to complement the Atlantic bollard and Atlantic pillar light. Designed for lighting of entrances and footpaths.
Custom wattages can be provided to suit customer and Title 24 requirements. (Specify total watts per fixture)

All Ligman fixtures can be manufactured using a special pre-treatment and coating process that ensures the fixture can be installed in natatoriums as well as environments with high concentrations of chlorine or salt and still maintain the 5 year warranty. For this natatorium rated process please specify NAT in options.

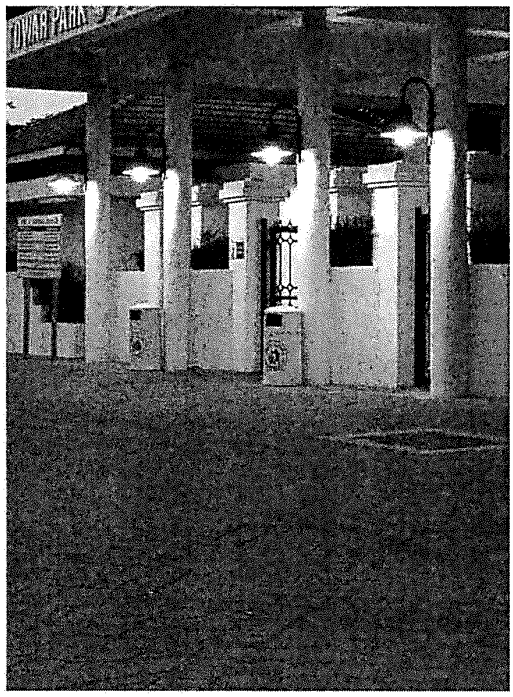

Ligman Lighting USA reserves the right to change specifications without prior notice, please contact factory for latest information. Due to the continual improvements in LED technology data and components may change without notice

UAA-30186

Atlantic 9 Medium Shade Shepherds Crook

LIGMAN LIGHTING USA

PROJECT		DATE	
QUANTITY		TYPE		NOTE	

ORDERING EXAMPLE || UAA - 30156 - 41w - 1 - 2 - W30 - 02 - 120/277v - Options

LAMP	SHADE	TOP	LED COLOR	FINISH COLOR	VOLTAGE
41w COB 2632 Lumens 29w COB 1856 Lumens	1 - Swept 2 - Straight	1 - Dome Top 2 - Cone Top	W27 - 2700K W30 - 3000K W35 - 3500K W40 - 4000K	01 - BLACK RAL 9011 02 - DARK GREY RAL 7043 03 - WHITE RAL 9003 04 - METALLIC SILVER RAL 9006 05 - MATTE SILVER RAL 9006 06 - LIGMAN BRONZE 07 - CUSTOM RAL	120/277v Other - Specify

INSPIRED BY NATURE FINISHES

- SW01 - OAK FINISH
- SW02 - WALNUT FINISH
- SW03- PINE FINISH
- DF - DOUGLAS FIR FINISH
- CW - CHERRY WOOD FINISH
- NW - NATIONAL WALNUT FINISH
- SU01 - CONCRETE FINISH
- SU02 - SOFTSCAPE FINISH
- SU03 - STONE FINISH
- SU04 - CORTEN FINISH

THERE IS AN ADDITIONAL COST FOR THESE FINISHES

ADDITIONAL OPTIONS

NAT - Natatorium Rated
DIM - 0-10v Dimming

More Custom Finishes Available Upon Request

Consult factory for pricing and lead times

Oak, Cherry, Beech, Carbon
Walnut, Chestnut, Bamboo, Galvanized
Pine, Mahogany, Birch, Steel

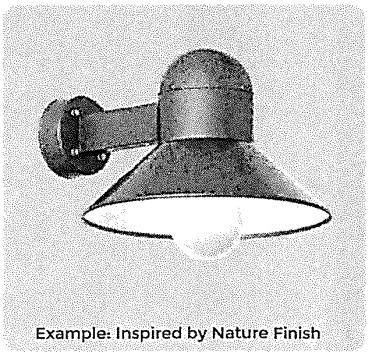

Example: Inspired by Nature Finish

Ligman Lighting USA reserves the right to change specifications without prior notice, please contact factory for latest information. Due to the continual improvements in LED technology data and components may change without notice

UAA-30146

Atlantic 7 Small Shade Surface

LIGMAN LIGHTING USA

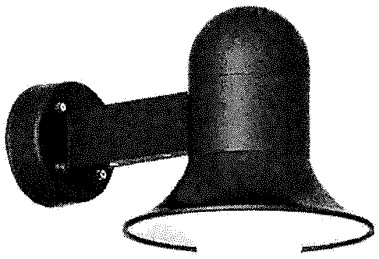

29w COB 1105 Lumens
IP55 • Suitable For Wet Locations
IK04 • Impact Resistant
Weight 14 lbs

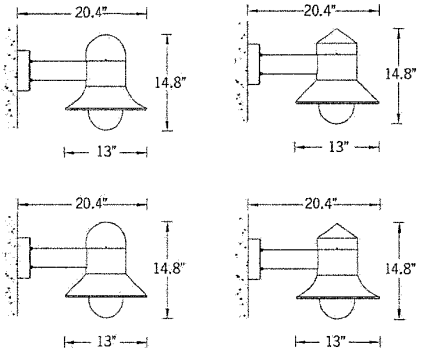

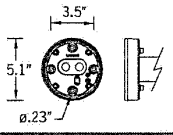

Mounting Detail

Construction

Aluminum
Less than 0.1% copper content – Marine Grade 6060 extruded & LM6 Aluminum High Pressure die casting provides excellent mechanical strength , clean detailed product lines and excellent heat dissipation.

Pre paint
8 step degrease and phosphate process that includes deoxidizing and etching as well as a zinc and nickel phosphate process before product painting.

Memory Retentive - Silicon Gasket
Provided with special injection molded "fit for purpose" long life high temperature memory retentive silicon gaskets. Maintains the gaskets exact profile and seal over years of use and compression.

Thermal management
LM6 Aluminum is used for its excellent mechanical strength and thermal dissipation properties in low and high ambient temperatures. The superior thermal heat sink design by Ligman used in conjunction with the driver, controls thermals below critical temperature range to ensure maximum luminous flux output, as well as providing long LED service life and ensuring less than 10% lumen depreciation at 50,000 hours.

Surge Suppression
Standard 10kv surge suppressor provided with all fixtures.

BUG Rating
B1 - U3 - G1

Finishing
All Ligman products go through an extensive finishing process that includes fettling to improve paint adherence.

Paint
UV Stabilized 4.9Mil thick powder coat paint and baked at 200 Deg C. This process ensures that Ligman products can withstand harsh environments. Rated for use in natatoriums.

Inspired by Nature Finishes
The Inspired by nature Finishing is a unique system of decorative powder coating. Our metal decoration process can easily transform the appearance of metal or aluminum product into a wood grain finish.

This patented technology enables the simulation of wood grain, and even marble or granite finish through the use of decorative powder coating.

The wood grain finish is so realistic that it's almost undistinguishable from real wood, even from a close visual inspection. The system of coating permeates the entire thickness of the coat and as a result, the coating cannot be removed by normal rubbing, chipping, or scratching.

The Coating Process
After pre-treatment the prepared parts are powder coated with a specially formulated polyurethane powder. This powder provides protection against wear, abrasion, impact and corrosion and acts as the relief base color for the finalized metal decoration.

The component is then wrapped with a sheet of non-porous film with the selected decoration pattern printed on it using special high temperature inks.

This printed film transfer is vacuum-sealed to the surface for a complete thermo print and then transferred into a customized oven. The oven transforms the ink into different forms within the paint layer before it becomes solid. Finally, the film is removed, and a vivid timber look on aluminum remains.

Wood grain coating can create beautiful wood-looking products of any sort. There are over 300 combinations of designs currently in use. Wood grains can be made with different colors, designs, etc.

Our powder coatings are certified for indoor and outdoor applications and are backed by a comprehensive warranty. These coatings rise to the highest conceivable standard of performance excellence and design innovation.

Added Benefits
- Resistance to salt-acid room, accelerated aging
- Boiling water, lime and condensed water resistant
- Anti-Graffiti, Anti-Slip, Anti-Microbial, Anti-Scratch
- Super durable (UV restant)
- TGIC free (non-toxic)

Hardware
Provided Hardware is Marine grade 316 Stainless steel.

Anti Seize Screw Holes
Tapped holes are infused with a special anti seize compound designed to prevent seizure of threaded connections, due to electrolysis from heat, corrosive atmospheres and moisture.

Opal Borosilicate Glass Lens
Provided with opal borosilicate impact resistant glass.

Optics & LED
Precise optic design provides exceptional light control and precise distribution of light.
LED CRI > 80

Lumen - Maintenance Life
L80 /B10 at 50,000 hours (This means that at least 90% of the LED still achieve 80% of their original flux)

Classic urban neighborhood wall-mounted luminaire family. Timeless lines coupled with unparalleled build quality, flexibility and performance.

A small and medium size shade decorative wall lantern with symmetrical light distribution. Developed to complement the Atlantic bollard and Atlantic pillar light. Designed for lighting of entrances and footpaths.
Custom wattages can be provided to suit customer and Title 24 requirements. (Specify total watts per fixture)

All Ligman fixtures can be manufactured using a special pre-treatment and coating process that ensures the fixture can be installed in natatoriums as well as environments with high concentrations of chlorine or salt and still maintain the 5 year warranty. For this natatorium rated process please specify NAT in options.

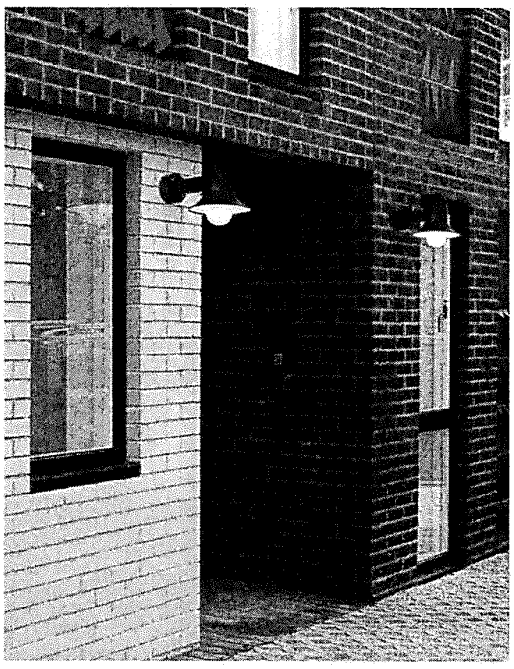

Ligman Lighting USA reserves the right to change specifications without prior notice, please contact factory for latest information Due to the continual improvements in LED technology data and components may change without notice

UAA-30146

Atlantic 7 Small Shade Surface

LIGMAN LIGHTING USA

PROJECT		DATE	
QUANTITY		TYPE		NOTE	

ORDERING EXAMPLE || UAA - 30146 - 29w - 1 - 2 - W30 - 02 - 120/277v - Options

UAA-30146						
LAMP	SHADE	TOP	LED COLOR	FINISH COLOR	VOLTAGE
29w COB 1105 Lumens	1 - Swept 2 - Straight	1 - Dome Top 2 - Cone Top	W27 - 2700K W30 - 3000K W35 - 3500K W40 - 4000K	01 - BLACK RAL 9011 02 - DARK GREY RAL 7043 03 - WHITE RAL 9003 04 - METALLIC SILVER RAL 9006 05 - MATTE SILVER RAL 9006 06 - LIGMAN BRONZE 07 - CUSTOM RAL	120/277v Other - Specify

ADDITIONAL OPTIONS	

NAT - Natatorium Rated
DIM - 0-10v Dimming

INSPIRED BY NATURE FINISHES
SW01 - OAK FINISH
SW02 - WALNUT FINISH
SW03- PINE FINISH
DF - DOUGLAS FIR FINISH
CW - CHERRY WOOD FINISH
NW - NATIONAL WALNUT FINISH
SU01 - CONCRETE FINISH
SU02 - SOFTSCAPE FINISH
SU03 - STONE FINISH
SU04 - CORTEN FINISH

THERE IS AN ADDITIONAL COST FOR THESE FINISHES

More Custom Finishes Available Upon Request

Consult factory for pricing and lead times

Oak
Cherry
Beech
Carbon
Walnut
Chestnut
Bamboo
Galvanized
Pine
Mahogany
Birch
Steel



Example: Inspired by Nature Finish

Ligman Lighting USA reserves the right to change specifications without prior notice, please contact factory for latest information. Due to the continual improvements in LED technology data and components may change without notice

Intertek

Jensen Yorba Wall Inc.
522 West 10th Street, Juneau, Alaska 99801 907.586.1070 jensenyorbawall.com
Designing Community Since 1935

Date: December 10, 2025
Re: Alaska Fly & Dive (JYW No. 25031)
Conditional Use Permit Application Historic District Narrative

The South Franklin Street side of Lot 1A is in the Historic District for a depth of 40' across the north side of the parcel. The project has been designed not only to fit the Historic District Standards & Guidelines, but to be a high-quality building in this important location. The following details the way the building complies with the Guidelines Chapter 7, "Design Guidelines for New Construction".

Placement and Orientation

- The building will be immediately adjacent to the South Franklin Street property line. The resulting sidewalk along this frontage will range from 12'-6" to 13'-6"—one of the wider sidewalks in the area.
- As discussed in the Variance Narrative, the building does not extend to the east property line in order to create a public Plaza adjacent to the Docks and Harbor parking / load area here.
- The west side of the building is built at a right angle to the South Franklin Street elevation in order both provide a strong square corner in this very visible location and provide for access along the side of the building from the emergency exit stairs.

Mass, Scale and Height

- The long building elevation along South Franklin has been broken up at consistent 26' intervals with pilasters or vertical trim elements which replicates the smaller buildings of the District.
- Throughout the Historic District portion of the building, the façade has been designed with a storefront below a large canopy, a middle with evenly spaced windows, and a cap of coping elements at the roof line.
- Throughout the Historic District, the 1st Floor is double-height, matching the traditional appearance of a tall ground floor.
- In the Historic District portion of the site, the building is a constant 38' tall, meeting the height restriction for the Zone as well as appearing as a traditional 3-story building. Taller elements are located at the back of the building and are not visible at eye-level from across the street. (See Perspective View 1 on Sheet A322).

Building Materials, Architectural Character and Façade Elements

- Within the Historic District portion of the site, the building will have the exterior elements which will recall, but not replicate, nearby heritage buildings.
    - Body siding will be horizontal and will have the appearance of painted beveled or tongue-and-groove wood. Different widths of siding will be used to vary the appearance along the long elevation.

- The monumental vertical pilasters and horizontal parapet coping will be a smooth panel material such as tile, matching the appearance of the neighboring Alaska Pacific Pier Building. Other vertical elements will have the appearance of painted wood trim.
- The street-level storefronts will have the appearance of traditional glazed wood storefronts rather than punched windows. The storefronts will have 18" tall kickplate trim below.
- Windows on the upper levels will appear to be wood double-hung windows surrounded by painted wood trim. The windows are twice as tall as they are wide. The windows are either single, or ganged together in groups of 2 or 3.
- The building will have a level, horizontal canopy all along the South Franklin and main east elevations.

- Although not required, the portions of the building outside of the Historic District will also recall historic buildings.
  - The small office and back-of-house portion of the building will have vertical corrugated metal siding. This siding will recall the Cold Storage warehouse buildings that used to be along the waterfront in this location. This more subtle portion of the large building will help offset the more decorative elevations of the building in the Historic District.
  - The tall Flying Theater at the SW corner of the building will have pilasters with tile trim matching exactly the trim from the 1944 Juneau Cold Storage Building.

Entries and Pedestrian Interest

- The building will have three main public entries and all will be in wide, 4' deep recessed portions of the storefront.
- The building will have glazed storefront for the majority of the South Franklin and east elevations in the Historic District offering views of the interior retail and display spaces to pedestrians.
- The small portion of the street-level wall along South Franklin without glazed storefront will have display screens framed with painted trim to provide year-round interest to people on the street.
- Walls on the west elevation which are too close to the property line to allow for glazed openings will have vertical pilasters, kickplates along the base, and coping trim to provide visually appealing walls on all sides of the building.

P | N | D
ENGINEERS, INC.

MEMORANDUM

PROJECT NO. 252097.01 **DATE: 12/9/25**

PROJECT: Alaska Fly and Dive

TO: Cory Wall, AIA

CC: Sean Sjostedt, P.E.

FROM: Mark Sams P.E., S.E.

SUBJECT: Alaska Fly and Dive Building Structural Narrative

The Alaska Fly and Dive building planned for construction on the archipelago lot in Downtown Juneau will utilize a number of structural systems to resist code prescribed loading and provide the maximum flexibility for the building programing and architectural appeal. The anticipated framing system will address geotechnical and other environmental considerations that provide a robust and safe facility for the owner, staff and patrons of the commercial facility.

The structural system will be designed using the latest edition of the International Building Code adopted by the building department in the City and Borough of Juneau where the project is located. The building will be designed using a Risk Category II structure since the assembly/theater/lobby space will support less than 300 people at a time. Based on the Risk Category, the following design criteria will be utilized for the structural design.

Anticipated design loading:

Live load: 100psf for assembly areas and lobby of the theaters.

Other Live loads will consist of the equipment with both static and dynamic loads applied to as outlined by the manufacturer.

Snow Load: 112 psf ground snow load for Category II Structure

Wind Criteria: 140 mph for Category II structure and the 3- second gust wind speed map for downtown Juneau.

Exposure D (building is on the water)

Seismic Criteria:

S_s= 0.54g S_{ms}= 0.81g S_{DS} = 0.54g

S_1 = 0.31g S_{m1}= 0.85g S_{D1} = 0.56g

R= 8 for special steel movement frames consisted of bolted end plate connections.

9360 GLACIER HIGHWAY, SUITE 100 • JUNEAU, AK 99801 • P: 907.586.2093 • F: 907.586.2099

The structure is anticipated to be framed using structural steel special moment frames to support the second floor and the roof structures. The first floor will bear on concrete beams supported by steel piles. It is anticipated to use slab on grade concrete for the first floor which will be designed as an elevated slab to address any long-term soil settlement at the site as well as any soil liquefaction that may occur during a seismic event. The first-floor concrete beams will be supported by steel pipe piles that are driven and end bear on the bedrock surface below the building to provide support regardless of any soil settlement or liquefaction that may occur.

The second-floor framing system is anticipated to include steel beams supporting a concrete elevated slab. The concrete slab is anticipated to provide a rigid diaphragm for the second floor. The roof framing members will include open web steel joists designed for large spans to provide maximum flexibility. The roof joists will support steel form deck which will provide a flexible roof diaphragm. The second and first floor framing will support partition walls as needed to divide the space.

The steel moment frame system will provide a flexible surface to mount the building façade. The wall framing system is anticipated to consist of steel studs mounted to the exterior face of the structural steel to provide continuity between floors. The stud system will allow exterior finishes to be mounted continuously and support both door and window headers.

Alaska Fly & Dive
Immersive Alaska
Discover the Magic of Juneau
ALASKA
FLY & DIVE
Alaskan Wonder Experience (AWE) LLC & Malvern Entertainment - Confidential Information - May Contain Trade Secrets - Do Not Distribute - All Rights Reserved

Table of Contents

Project Introduction, page 3

Market, page 7

Project Concept, page 8

Architectural Layout , page 13

Attraction Overview, page 17

Appendix, page 44

- Community Impact & Involvement
- Letters of Support,
  - Juneau Economic Development Council
  - Juneau Downtown Business Association
  - Travel Juneau Board of Directors
  - St. Vincent de Paul Saint Therese Conference

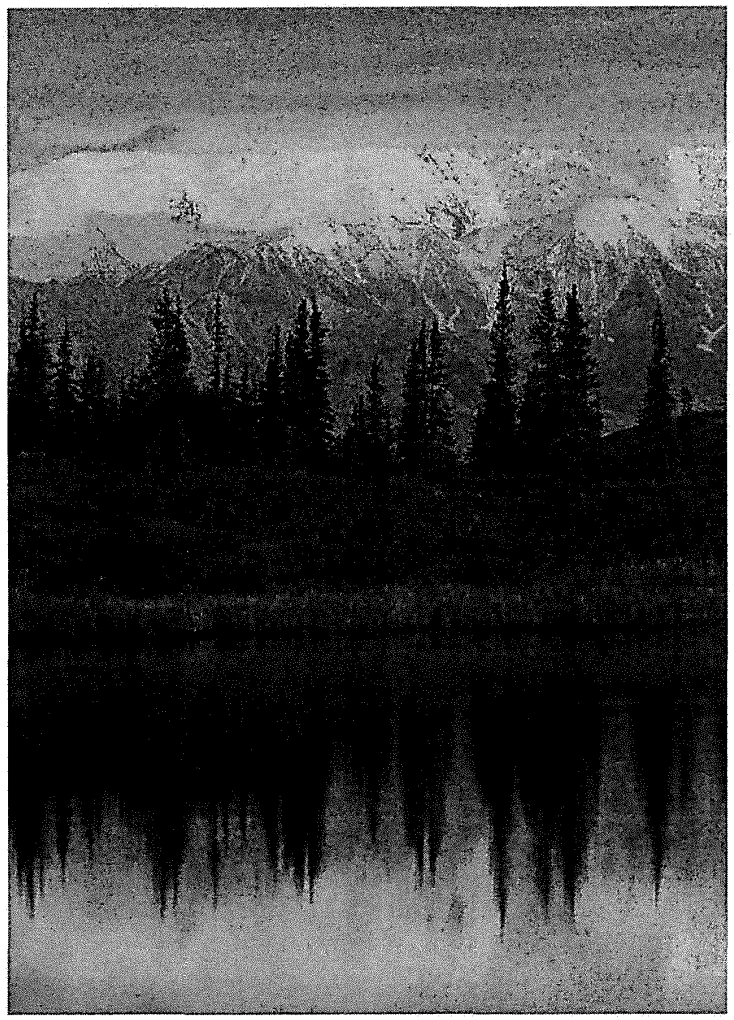

Alaskan Wonder Experience (AWE) LLC & Malvern Entertainment - Confidential Information - May Contain Trade Secrets - Do Not Distribute - All Rights Reserved

PROJECT INTRODUCTION

DISCLOSURE

The materials presented in this overview, including the logo, renderings, and imagery, are conceptual in nature and not final. They are provided solely for the purpose of submittal and review as part of the City and Borough of Juneau (CBJ) Planning Commission process for zoning and code review. While the property is partially located within the historic district, the design has been developed with consideration for its proximity to that area. All visuals are intended to convey design direction and thematic intent and may be refined or revised as the project advances. Final branding, graphics, and design elements will be subject to additional development, review, and approval processes.

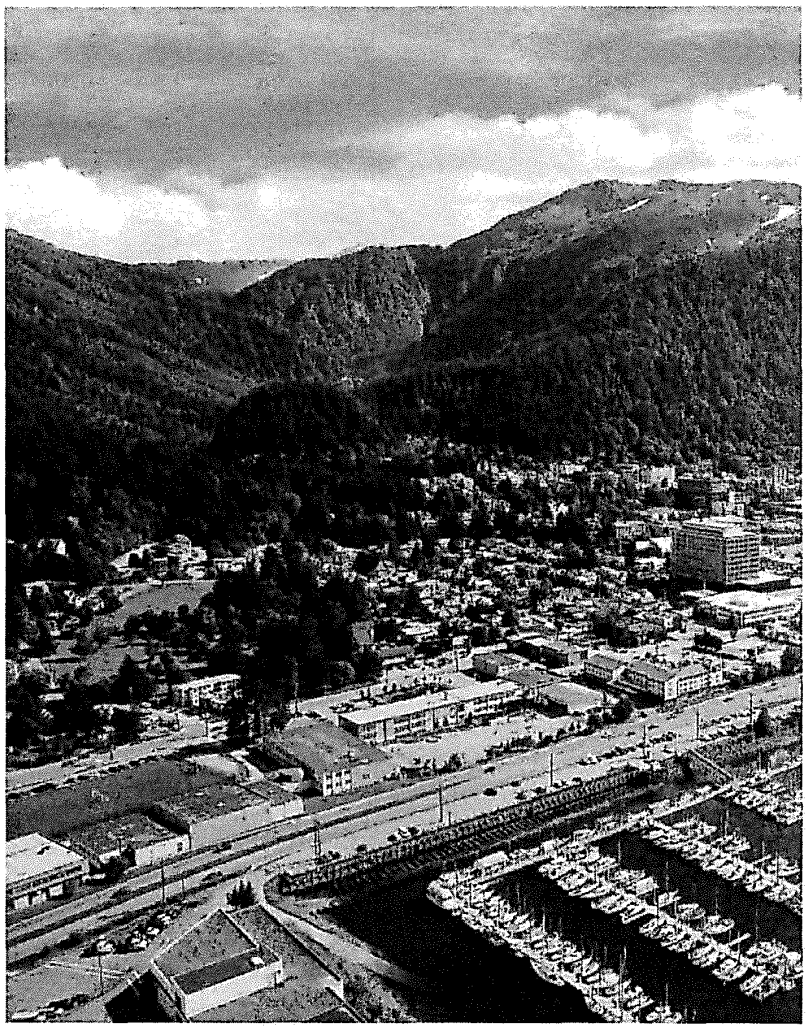

Alaskan Wonder Experience (AWE) LLC & Malvern Entertainment - Confidential Information - May Contain Trade Secrets - Do Not Distribute - All Rights Reserved

A PREMIER LOCATION-BASED ENTERTAINMENT ATTRACTION IN DOWNTOWN JUNEAU, ALASKA

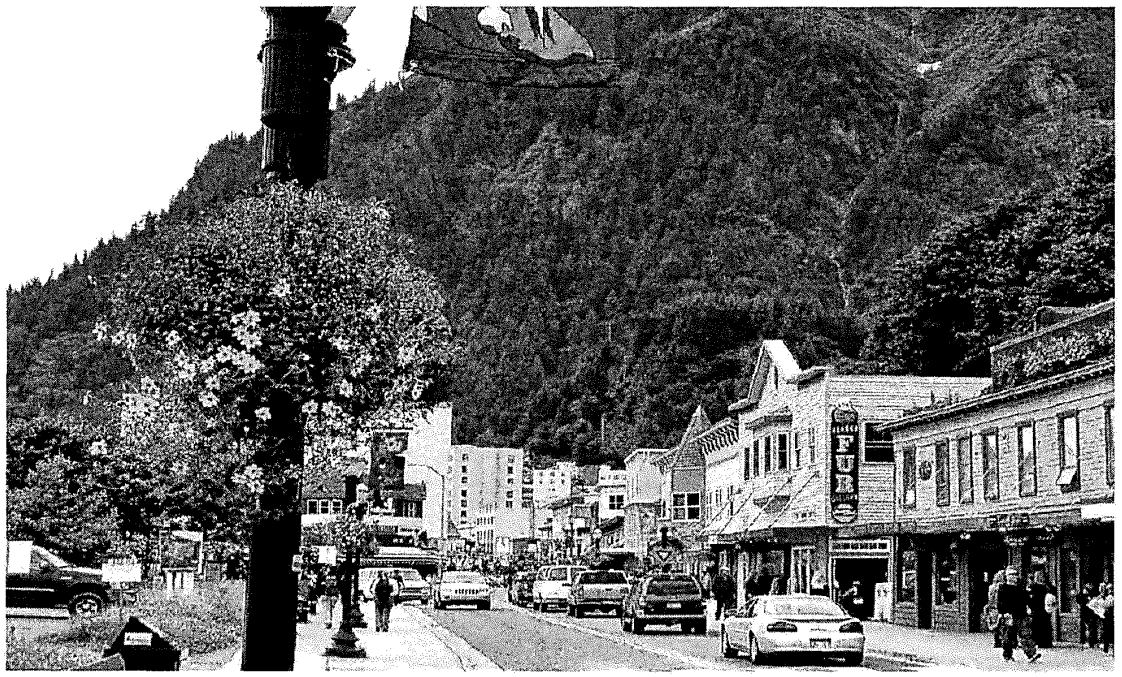

Alaskan Wonder Experience (AWE) LLC & Malvern Entertainment - Confidential Information - May Contain Trade Secrets - Do Not Distribute - All Rights Reserved

PROJECT OVERVIEW

Who We Are
Alaskan Wonder Experience (AWE), LLC is a limited liability company formed in 2025 to consolidate land ownership, architectural designs, ride systems, film content, and related intellectual property for the development of a world-class family entertainment attraction in downtown Juneau, Alaska.

Project Background
Originally conceived in 2017, the project was delayed due to the COVID-19 pandemic and property availability. Now with the land secured and feasibility determined. The project value had to meet the demands of the current tourist base and create enough revenue to justify the cost of the equipment, building and land. The development resumed in 2025 and is now on track to launch in Spring 2027, positioned to serve both Juneau's 1.73 million annual visitors and the surrounding 32,000 residents and other communities in the SE region.

Investment Opportunity
To fund completion of construction, installation, and launch, the Company is offering up to $60 million in Preferred and Common membership units through a private placement to accredited investors, conducted under Rule 506(b) of Regulation D of the Securities Act of 1933.

Important Note
This Project Overview and Investment Summary are provided for informational purposes only. They do not constitute an offer to sell or a solicitation of an offer to buy securities. Any investment in Alaskan Wonder Experience, LLC will be made solely through the Private Placement Memorandum (PPM) and Subscription Agreement provided to eligible investors.

Alaskan Wonder Experience (AWE) LLC & Malvern Entertainment - Confidential Information - May Contain Trade Secrets - Do Not Distribute - All Rights Reserved

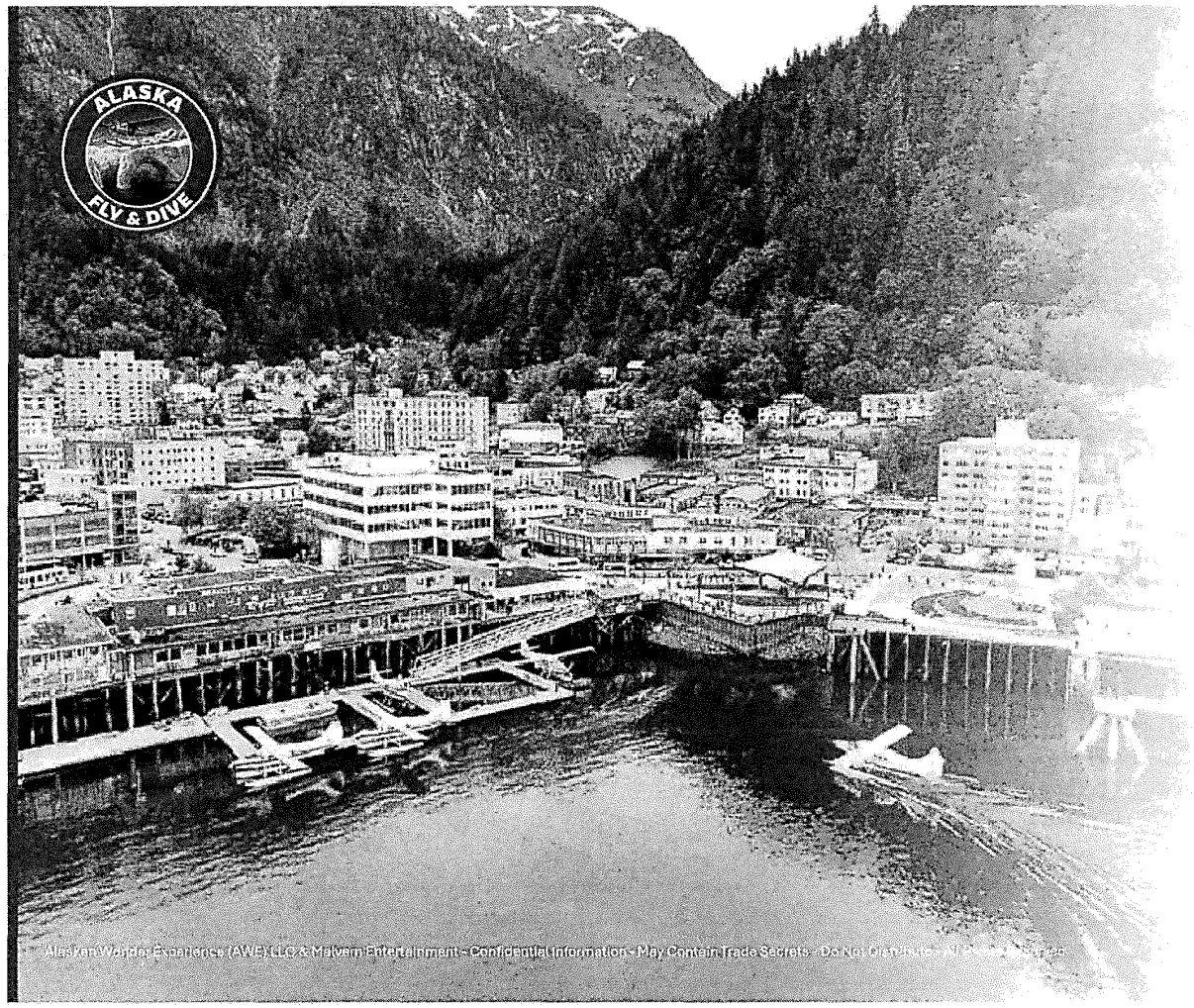

ORIGIN STORY: A PREMIUM LOCATION

Franklin Street in Juneau is the city's prime waterfront corridor, an ideal home for an immersive fly theater and other equipment to show case Alaska and all its "Grand Beauty". The founding partners secured the **last available waterfront lot**, offering unmatched visibility at the entrance to the **dock port of Juneau** and immediate access to **five major cruise ship docks**.

With **1.73 million annual visitors** and limited entertainment options, 356 Franklin is perfectly positioned to become Juneau's next iconic destination.

STRONG MARKET OPPORTUNITY

An affluent market, Juneau boasts the most millionaires per capita in the US. The Juneau Borough generated **$236.8 million** in tourist spending in 2018 from more than **1.73 million visitors.**

Franklin Street in downtown Juneau is the primary beneficiary of tourism, anchored by the **Mendenhall Glacier** which draws more than 700,000 visitors per year and the Mt Roberts Tram. This highly trafficked street is immediately adjacent to disembarking cruise ship passengers.

Alaska Fly & Dive is perfectly located next to the disembarking cruise ships which funnels 1.73 million visitors on two walkways on either side of the property.

ADDRESSABLE MARKET
1.73M VISITORS

TOTAL VISITOR SPENDING
$ 236.8 MILLION

WEATHER CHALLENGES

LIMITED
TOUR OFFERINGS

Alaskan Wonder Experience (AWE) LLC & Malvern Entertainment - Confidential Information - May Contain Trade Secrets - Do Not Distribute - All Rights Reserved

CONCEPT SUMMARY

This 36,000+ sq. ft. building rises to 54 feet at its tallest point, stepping down to 35 feet to integrate seamlessly with its surroundings. Inside, guests will discover fully immersive experiences that bring the wonders of Alaska to life.

Highlights include:

- One Large Flying Theater where guests soar above glaciers, and iconic Alaskan landscapes, with feet dangling as they journey through over twenty must-see destinations.
- Three Ocean 360 Submarine Simulators, plunging guests beneath icy waters and we experience features like a glacier dive and orca encounters.
- 4D Theater- Special 3D LED State-of-art theater to showcase special films like the *Salmon Run*.
- 2,100 sq. ft. of retail space, connected public restrooms, and a variety of food & beverage offerings designed for both ticketed and non-ticketed guests.
- Photo opportunities and themed environments, from standing beneath a sheet of glacial ice to exploring a moss-covered rainforest, all designed to create lasting memories.

Together, these features transform the building into a landmark attraction that celebrates Alaska's beauty while providing a welcoming space for visitors and the community.

Alaskan Wonder Experience (AWE) LLC & Malvern Entertainment - Confidential Information - May Contain Trade Secrets - Do Not Distribute - All Rights Reserved

EXPERIENCE NARRATIVE

Alaska's wonders are now more within reach than ever — take a journey through the wild to places once visited only by explorers and perhaps discover sights even the most seasoned adventurers have never seen. Guests will experience the breathtaking beauty of Alaska through over twenty iconic must-see destinations that showcase the state's glorious landscapes, wildlife, and natural wonders.

The building itself exudes this spirit with great marque signage and adventure props peaking through the windows, calling everyone who arrives in Juneau to adventure. A polar bear dives and glides through icy waters on a large LED display in the center of the lobby, giving one of many glimpses into the journeys that await guests. Alaska's beauty is everywhere sky, ocean, and land: On the Flying Theater experience, we fly *over Alaska;* on the *Ocean 360 Submarine Simulator, we* experiences featuring *Glacier Dive* and an *Orca Journey, while a 4D theater provides encounters with bear, salmon, foxes and more.* These immersive attractions are complemented by a fully themed interior offering guests the opportunity to stand under a sheet of glacial ice or walk through a moss-covered rainforest on Douglas Island.

Together, we welcome all to share in the wonder that defines Alaska.

Alaskan Wonder Experience (AWE) LLC & Malvern Entertainment - Confidential Information - May Contain Trade Secrets - Do Not Distribute - All Rights Reserved

GENERAL OPERATIONS

Proposed Activity Overview

- We anticipate welcoming **350,000 guests annually**, with projected growth to **400,000 visitors** within five years.
- **Operating Season:** April–October, open daily from 10:00 AM to 10:00 PM. Based on cruise line schedules and demand, hours may extend from 8:00 AM to 10:00 PM.
- During **off-peak months**, when cruise traffic is reduced, programming will shift to local community events, educational activities, and special events.
- General operating hours will be tailored to seasonal demand, aligning with visitor volume and community needs.

Community Use & Flexibility

Beyond serving as a premier attraction, the facility's **36,000+ square feet of space** is designed to support the Juneau community through flexible, multi-use opportunities. The theaters can be repurposed to host educational seminars, workshops, and local conferences, while the grand atrium and common areas can accommodate holiday celebrations, community gatherings, and civic events. This mixed-use approach ensures the venue contributes year-round value to both visitors and residents.

Site Impacts & Amenities

- **Parking:** No on-site parking will be provided.
- **Restrooms:** proposed 7 male, 8 female, plus ADA-accessible and family restrooms will be available for guests.
- **Other Amenities:** Building includes 3 theater attractions that will all be treated with acoustic panels for optimal sound containment. Buildings, lighting, and operational considerations will be designed to minimize community impact and meet local code requirements (including noise). Exterior music and uplighting will also be designed to meet local code requirements.

Alaskan Wonder Experience (AWE) LLC & Malvern Entertainment - Confidential Information - May Contain Trade Secrets - Do Not Distribute - All Rights Reserved

ESTIMATED STAFFING PLAN

Total Estimated Staffing: 30 Staff Members

The operation is supported by an estimated 30 staff members, with staffing levels flexing seasonally to accommodate peak demand. To support future growth and provide scheduling flexibility, we recommend planning for a buffer of 30–35 staff. This mix of full-time and part-time employees allows coverage for additional support roles, seasonal fluctuations, and operational needs. Housekeeping, cleaning, and security will likely be supported by contracted services.

Department	Role	Headcount
General Management	General Manager	1
	Duty Manager	1
	Operations Managers	2
Technical Support	Technicians	5
Front of House	Admissions, Front Door, Retail Staff	8
Attractions	Operators, Ticket Scanners, Preshow Attendants	13
	Total	**30**

Alaskan Wonder Experience (AWE) LLC & Malvern Entertainment - Confidential Information - May Contain Trade Secrets - Do Not Distribute - All Rights Reserved

PRIME LOCATION

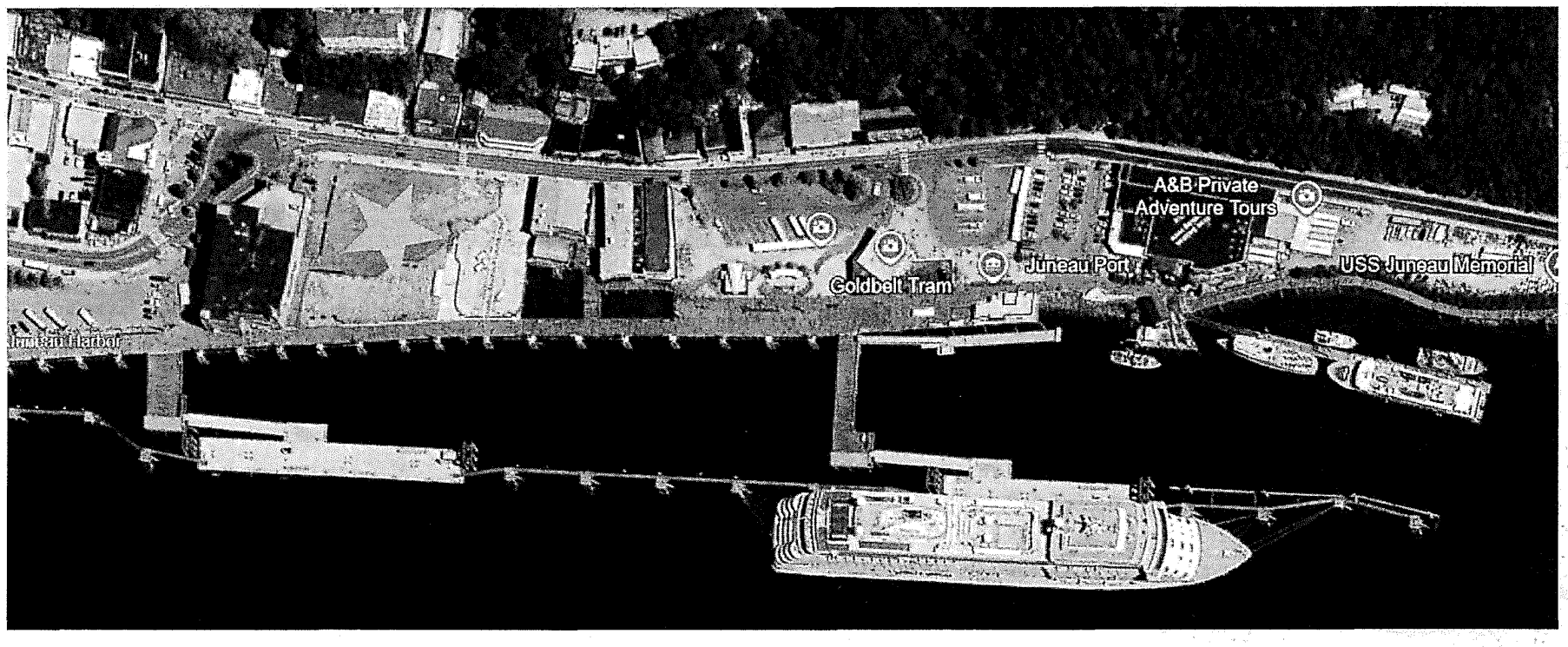

ARCHITECTURAL LAYOUT CONCEPT

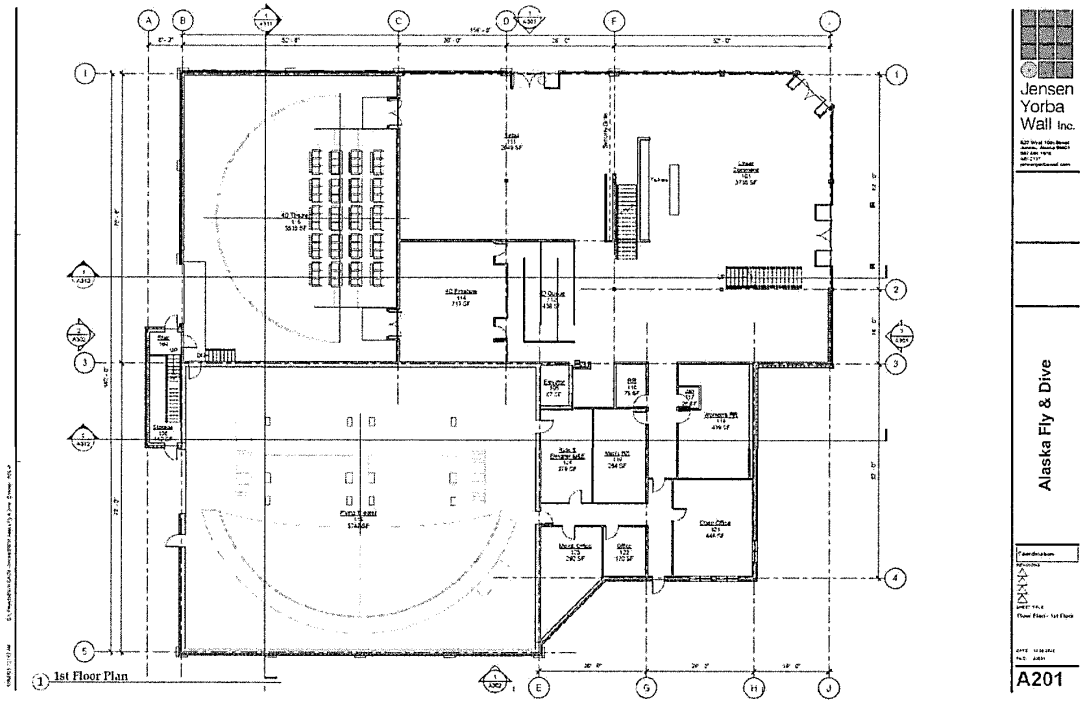

Building Conceptual Layout

- Grand atrium entrance
- One large flying theater with preshow experiences
- Three Ocean 360° underwater attractions with preshow
- 4D Theater, 3D LED Theater
- 2,000 sq. ft. of retail space with connected public restrooms
- Alaskan photo opportunities throughout, both paid and complimentary

Alaskan Wonder Experience (AWE) LLC & Malvern Entertainment - Confidential Information - May Contain Trade Secrets - Do Not Distribute - All Rights Reserved

ARCHITECTURAL LAYOUT CONCEPT

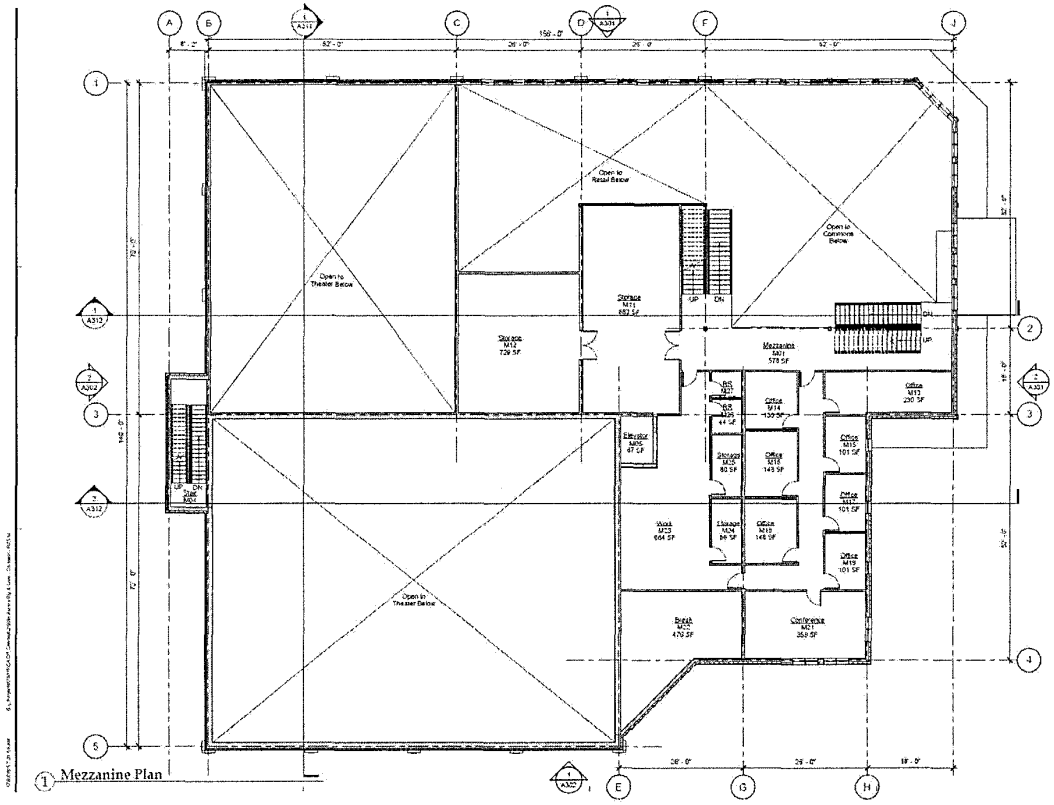

Jensen Yorba Wall Inc.

Alaska Fly & Dive

Coordination

REVISIONS

SHEET TITLE
Floor Plan - Mezzanine

DATE
FILE

A202

ARCHITECTURAL LAYOUT CONCEPT

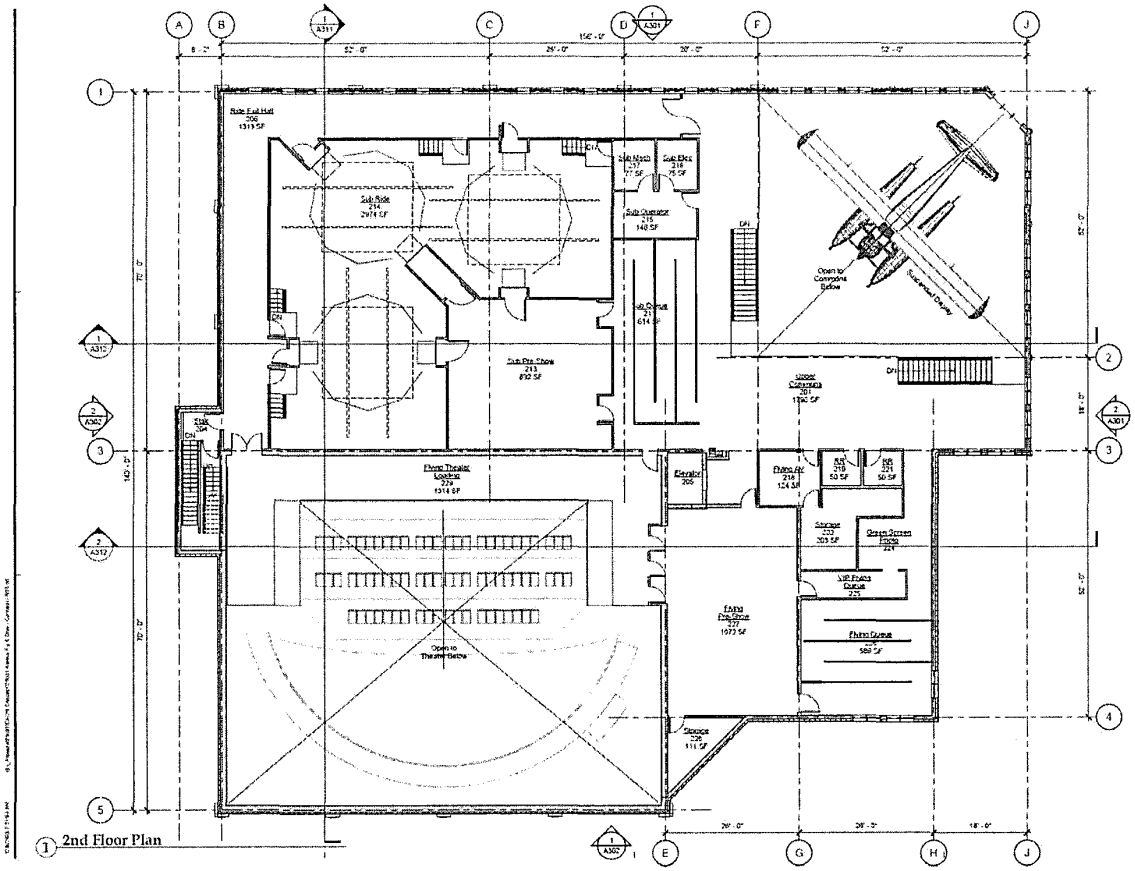

1 2nd Floor Plan

Jensen Yorba Wall Inc.

Alaska Fly & Dive

Coordination

SHEET TITLE
Floor Plan - 2nd Floor

DATE

FILE

A203

ARCHITECTURAL LAYOUT CONCEPT

Total Estimated Square Feet: 36,448

The following charts outline the proposed square footage for the Alaska Wonder Experience, covering the first, a Mezzanine and a second floor as well as an outside courtyard of premium space

First Floor Level Area Breakdown	
Description	**Sq Feet**
Atrium/Lobby	3,738
Retail	2,049
4D Theater Preshow and Que	1,156
4D Theater, 3D LED screens	3,510
Ocean 360 Theater Maintenance Areas	1,457
Flying Theater – 72 Passengers	5,747
MEP (Mechanical, Electrical, Plumbing) Room	567
Maintenance Office/Storage	292
Misc office space	566
Restrooms	723
Elevator	105
Other	
	19,910

Mezzanine Level	
Description	**Sq Feet**
Storage Rooms	1,611
Conference/ Classroom	684
Office space	1,318
Break Room	476
	576
Total	**4,665**

Second Floor Level Area Breakdown	
Description	**Sq Feet**
Level 2 _ Commons Area	1,796
Flying Theater Queue	814
Flying Theater Preshow	1,072
Ocean 360 Submarine Preshow	892
Ocean 360 Submarine Theater	2,974
Ocean 360 Theater Maintenance Areas	367
Area 2 - Office/Storage etc.	2,023
Elevator	205
Storage	317
Restroom	100
Exit Corridors Other	1,313
Total	**11,873**

Alaskan Wonder Experience (AWE) LLC & Malvern Entertainment - Confidential Information - May Contain Trade Secrets - Do Not Distribute - All Rights Reserved

ALASKA FLY & DIVE

Developed in collaboration with **Malvern Entertainment**, Alaska Fly & Dive (Attraction name placeholder) combines three thrilling experiences within a fully immersive setting:

- **Flying Theater**, featuring state-of-the-art SFX-Motion Seats, a customized motion base, an immersive-dome high-resolution theater for a seamless, gliding sensation as guests experience world-class films produced for the family (*72 seats, 52' dome screen*);
- **Ocean 360** , a deep-sea adventure using fully immersive LED screens and a synchronized motion base to simulate a realistic underwater journey (*360-degree screens, 20-seat simulator*);
- **4D Theater** – Using state-of-the-art 3D LED panels, this theater will deliver beautiful scenic movies with the latest 3D technology as well as state of the art seats for added experience dimension.



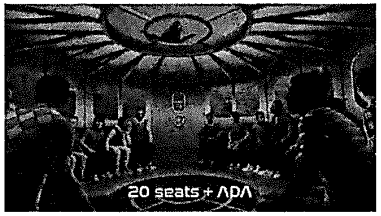

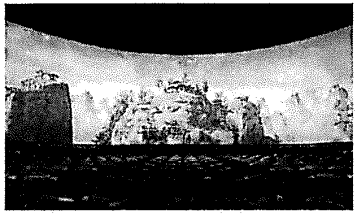

Alaskan Wonder Experience (AWE) LLC & Malvern Entertainment - Confidential Information - May Contain Trade Secrets - Do Not Distribute - All Rights Reserved

FLYING THEATER

Media Concept Art

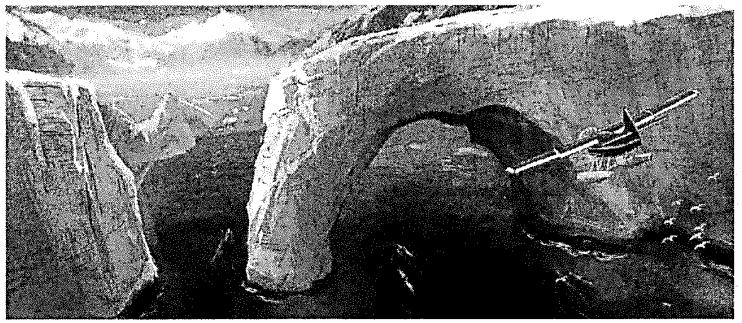

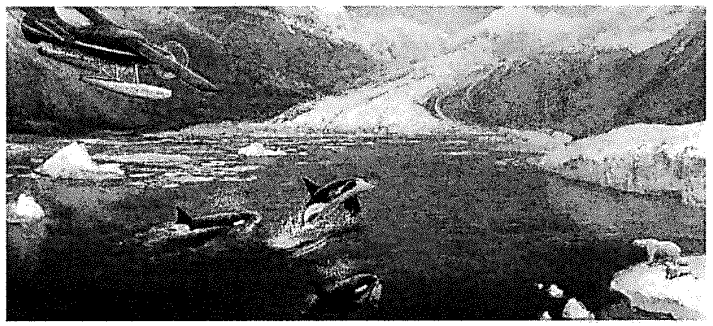



FLYING THEATER Equipment

- Huge Demographic Range – 4 to 94 years old
  - 39in (100cm) min height requirement
- Single Level Loading
  - Reduces load / unload time increasing THRC
  - Requires fewer employees to operate
  - Reduced facility structure and interface compared with multi-level loading
- Unsurpassed Motion System
  - Variable motion capability including:
    - Aggressive high impact maneuvers and multi-axis combinations
    - Extremely smooth and serene flight
  - Quiet all-electric drive system
  - Reduced maintenance with nearly a decade of history and improvements
- Dramatic Reveal Moment – Load to Flying Position
- Ergonomic Mesh Seats with Locked and Monitored Seat Belts
- Special Effects – Wind, Scent, Mist, and Strobe Light
- Industry Best Laser Projectors with Micro-Perforated Aluminum Screen
  - 20+ Megapixel resolution
  - Brilliant colors and pin sharp image quality across entire screen
- Premium 3D 11.4 Surround Sound Audio System

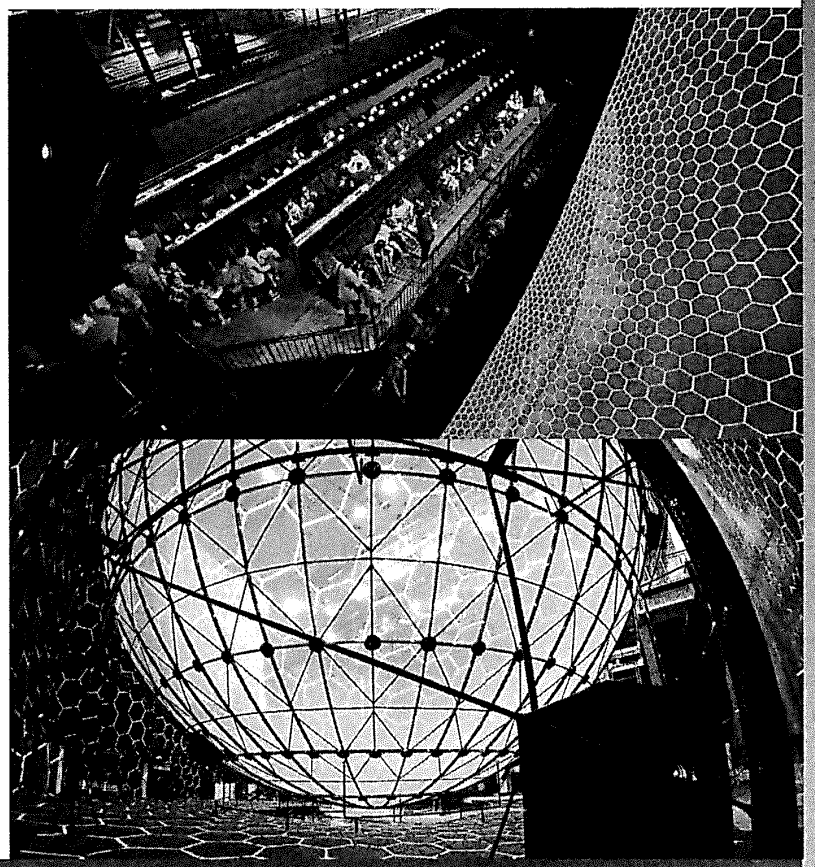

Produced by Dynamic Attractions
This content is CONFIDENTIAL. Do NOT distribute. December 25.

FLYING THEATER

- Flying Theater systems including:
  - Ergonomic mesh seating
  - Single Level Loading
  - Drive components
  - Ride Control Monitored seatbelts
  - Premium surround sound
  - Special effects, wind, scent and mist
  - Screen and laser projection systems – Uses highest resolution projectors

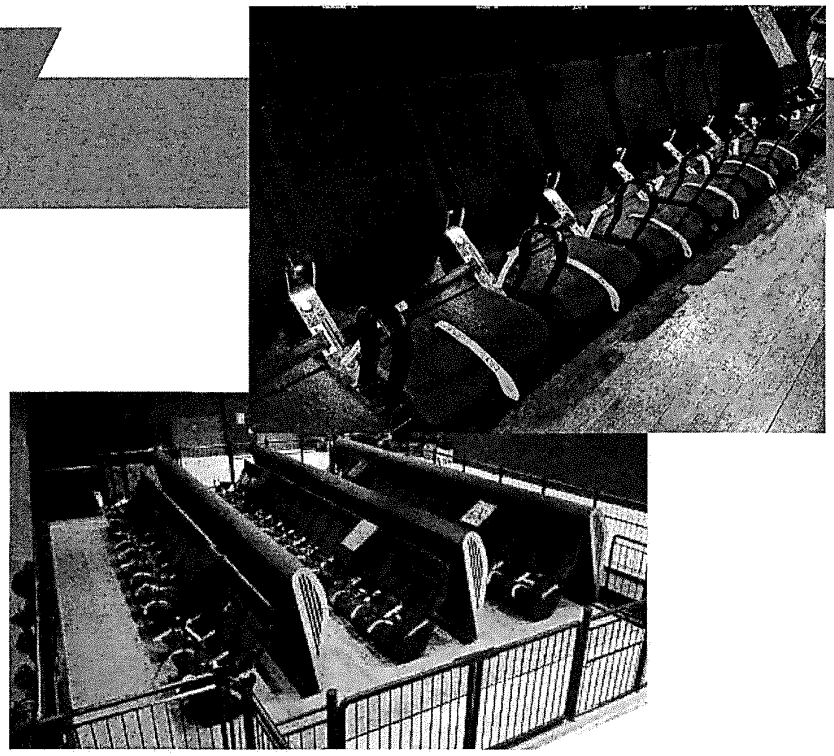

FLYING THEATER

DYNAMIC ATTRACTIONS

ATTRACTION SPECIFICATIONS

PARAMETERS	FT72
Number of Seats	72
Theoretical Hourly Capacity (THRC)	740 PPH
Ingress / Egress Time	120 sec
Show Time	240 sec
Total Cycle Time	360 sec
Ride Equip Power Requirement	263 kVA at 380V, 3PH, 400A

AUDIO VISUAL SPECIFICATIONS

PARAMETERS	FT39
Screen Dimensions	Diameter: 20.2m, Height: 14.6m (Diameter: 65.5ft, Height: 48. ft)
Projectors	3x 4K 3-Chip Digital Laser Projectors 23,500 Lumen, RGB Laser
Screen Resolution	>20 Megapixel
11.4 Surround Sound Audio	11 Screen Mounted and 4 Subwoofers
Film Length	Multiple Films Capable – up to 32min total time
AV Power Requirement	120 kVA at 380V, 3PH, 182A

FACILITY SPACE REQUIREMENTS

FT 72

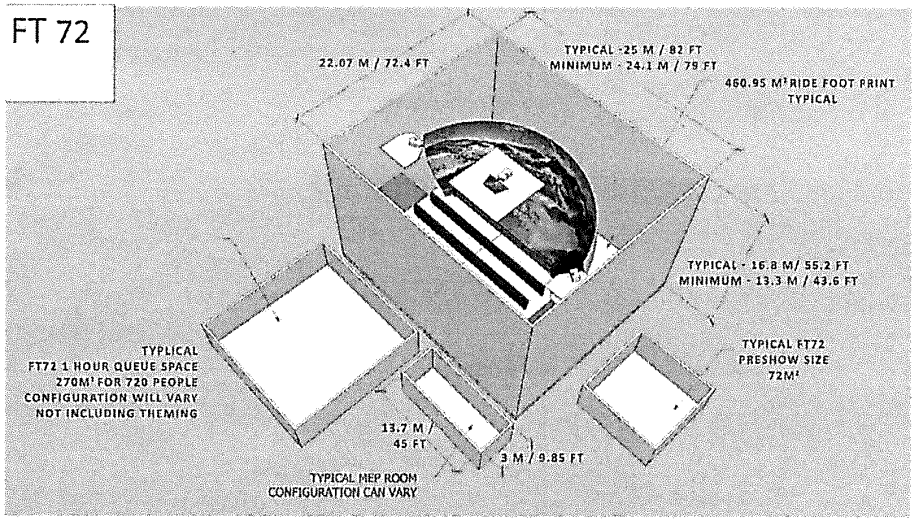

Flying Theater Overview

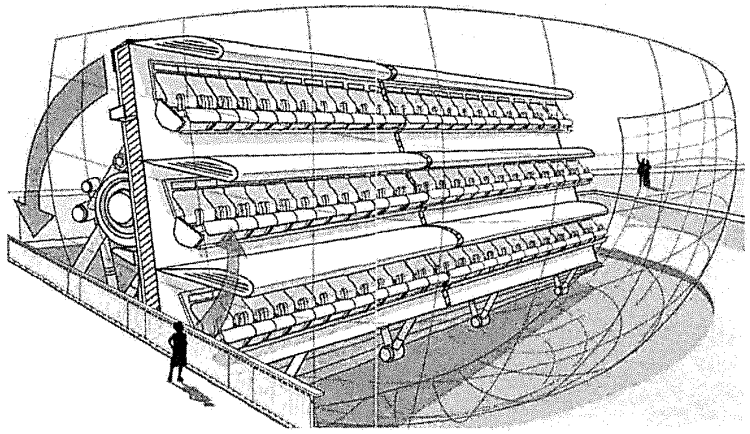

SINGLE LEVEL LOADING

- Quick and easy for riders
- Maximizes THRC
- Minimizes the number of operators

MODULAR DESIGN

- Easy to maintain
- Designed for maximum asset life
- Facility requirements drastically reduced
- Customized requirements

EFFICIENT

- Extremely smooth and serene flight
- Quiet, fully electric motors
- Fewer moving parts and simplified programming

SPECIAL EFFECTS

- Wind
- Vibration in Seat
- 3 Scents
- Water Spritz

DEGREES OF FREEDOM

Mechanical DOF
- Pitch
- Heave

Optical DOF (Film effects)
- Yaw
- Roll
- Surge
- Pan

Operating Parameter	FT 72
Platform Motion Range, Loading to Flying Mode	0 – 82 deg
Platform Motion Time (0-82deg)	12 sec
Seat Pitch Range (Pitch Forward to Back)	+/- 10 deg
Seat Pitch Motion Time (0 – 10 deg)	1 sec
Seat Heave Range in Vertical Position	1 m
Seat Heave motion Time (0.5m Movement)	1.25 sec

DYNAMIC ATTRACTIONS

FLYING THEATER FT72

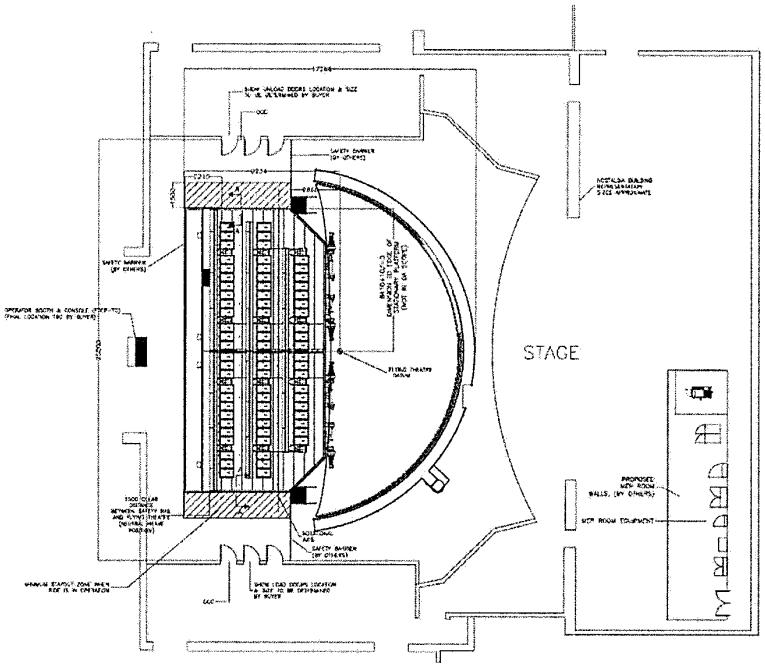

PLAN VIEW -- FLOOR INTERFACE
RIDE PLACEMENT AND DIMENSIONS

FT72 – In a sample building

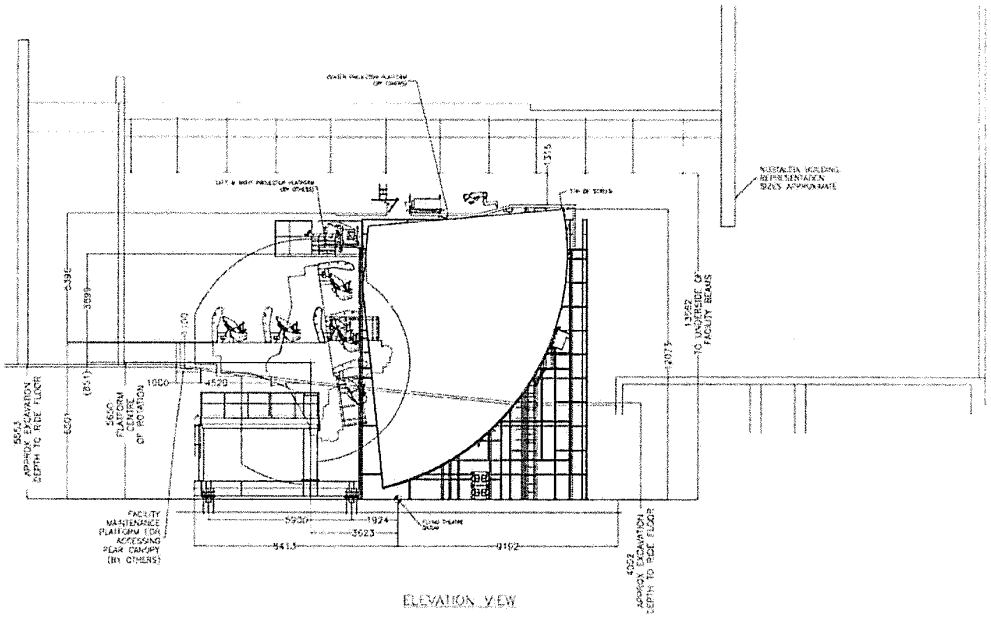

ELEVATION VIEW

FLYING THEATER ARRANGEMENT

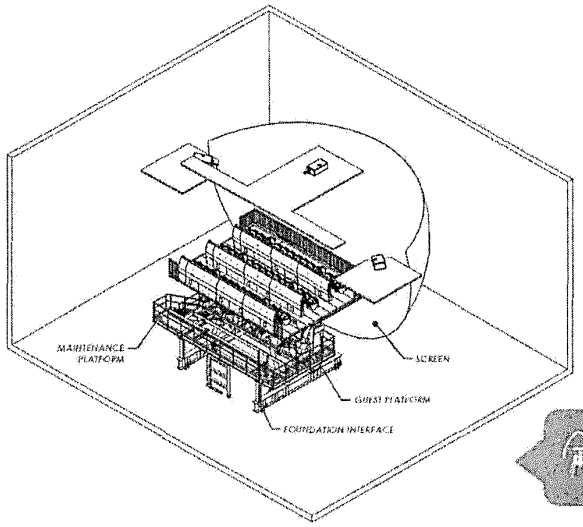

Figure 3:
FT39 General Arrangement With Motion Base & Audio / Visual

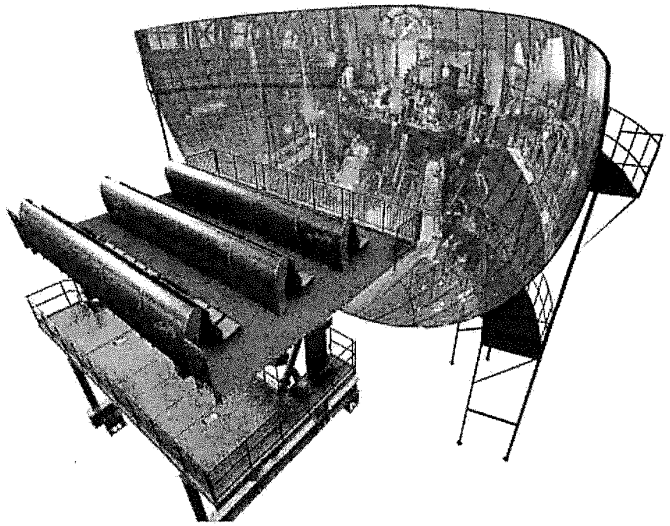

Alaskan Wonder Experience (AWE) LLC & Malvern Entertainment - Confidential Information - May Contain Trade Secrets - Do Not Distribute - All Rights Reserved

OCEAN 360

Media Concept Art

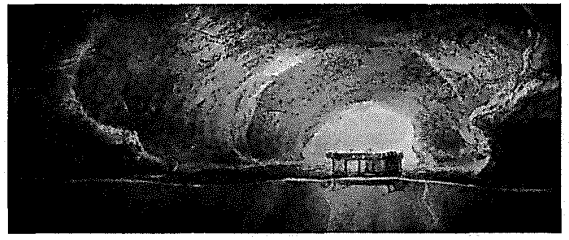


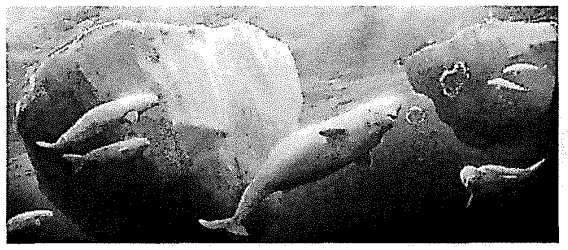
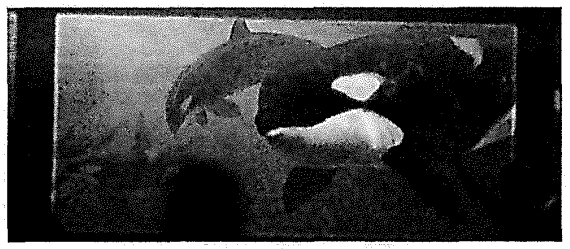
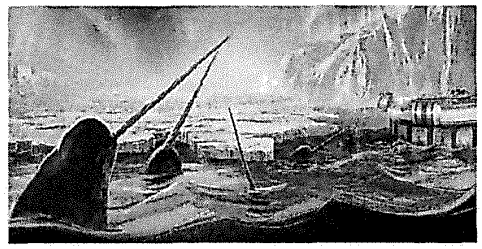

Alaskan Wonder Experience (AWE) LLC & Malvern Entertainment - Confidential Information - May Contain Trade Secrets - Do Not Distribute - All Rights Reserved

RIDES & ATTRACTIONS

OCEAN 360

Submersible Simulator

The Ocean Voyager's combination of cutting-edge technology, immersive storytelling, and interactive elements promises an unforgettable experience that educates, entertains, and inspires a deeper appreciation for the ocean.

Encompassing all views, immersive LED screens and a motion base work together to create a highly realistic and dynamic underwater experience, intensifying the sensation of diving and exploring.



CONFIDENTIAL CONTENT - DO NOT DISTRIBUTE ©2025 MALLERN ENTERTAINMENT

Pitch & Roll + Seat Vibration
20 seats + ADA
Immersive Audio
Special Effects + Custom Lighting
RIDES & ATTRACTIONS
OCEAN 360 A LOOK INSIDE
KRAFTWERK
27

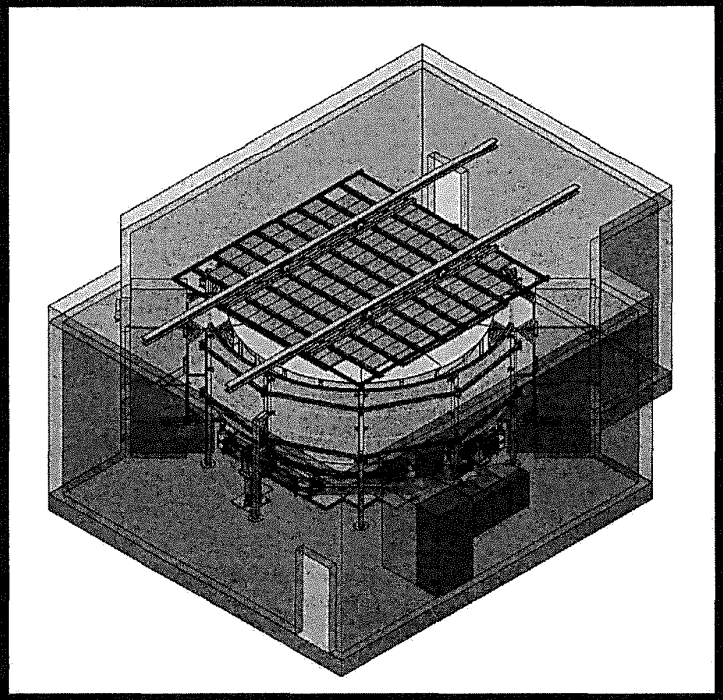

- 2DOF Motion Base (pitch & roll)
- High resolution LED screens
- Fully integrated SFX components
- 10 channel audio system
- Customizable exterior theming
- Simple installation
- Low-cost maintenance
- 99% uptime/highly reliable components
- Revenue generating and extremely marketable
- Offers guest repeatability w/ multiple experiences

RIDES & ATTRACTIONS

OCEAN 360 SPECIFICATIONS

CONFIDENTIAL CONTENT - DO NOT DISTRIBUTE - ©2025 MALTERN ENTERTAINMENT

Specifications	
Number of Seats	20 + 1 ADA
360° Plus Ceiling and Floor	High Resolution LED Screens
Motion Base	Pitch and Roll
Surround Sound	10 Channel Audio System
Light Onboard SFX	RGB LED and Strobe, Floor Illumination
Minimum Site Requirements	11.4 m X 4.6 m
Typical Load/Unload Time	60 seconds
Desired Show Time	360 seconds
THRC	160
Operational Environment	Indoors
Motion Base Electrical Requirements	3-phase 208 VAC, 50/60 Hz.

CONFIDENTIAL CONTENT - DO NOT DISTRIBUTE ©2025 MALVERN ENTERTAINMENT

Ocean 360 Launch Bay

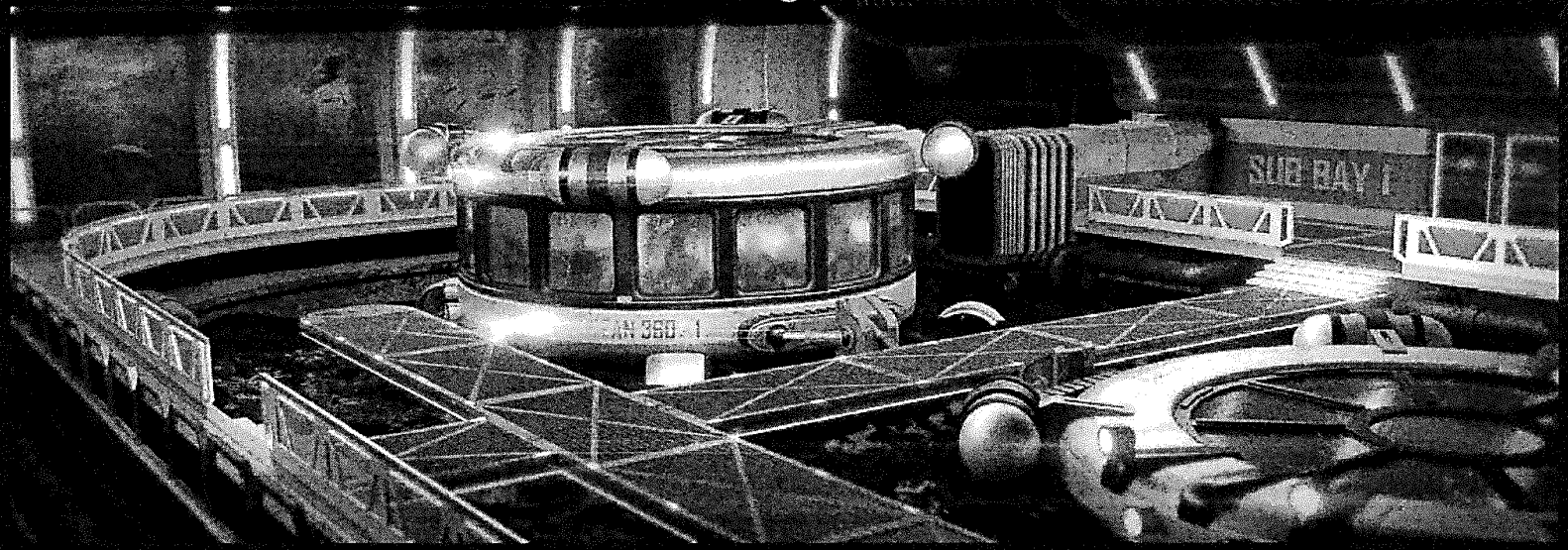

CONFIDENTIAL CONTENT DO NOT DISTRIBUTE ©2025 MALVERN ENTERTAINMENT

Humpback Whale Encounter

The awe-inspiring voyage of a Humpback Whale family from Juneau, Alaska to Maui, Hawaii.

We submerge under Juneau, Alaska encircled by a dense kelp forest waving with the current. To our delight, sea otters dart by the portholes and playfully greet us. As the kelp forest gives way to the open ocean we hear a whale song in the distance. Out of the deep blue, one of the most majestic creatures on the planet glides above us. And they are not alone! We follow a mother Humpback Whale and her calf from the safety of Juneau encountering all species of marine animals on the migration route to the Hawaiian Islands.



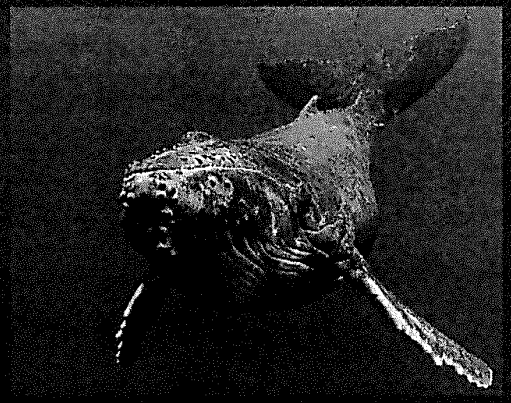

CONFIDENTIAL CONTENT - DO NOT DISTRIBUTE ©2025 MALTESE ENTERTAINMENT

Attachment A – Application Packet

Sea Lion Encounter



CONFIDENTIAL CONTENT - DO NOT DISTRIBUTE ©2025 MALLERN ENTERTAINMENT

Attachment A – Application Packet

Humpback Whale Encounter



CONFIDENTIAL CONTENT - DO NOT DISTRIBUTE - ©2025 MALVERN ENTERTAINMENT

Attachment A – Application Packet

Humpback Whale Encounter



CONFIDENTIAL CONTENT - DO NOT DISTRIBUTE ©2025 MALVERN ENTERTAINMENT

Deep Sea Encounter

Beneath the ocean lies a geological feature as majestic as the Grand Canyon.

The deep sea is still a mystery to all of us, and we will be amazed as we learn how our favorite meal in Juneau lives and congregates as a species – the Alaskan King Crab

We dive through a school of sardines swirling mightily and engulfing the Ocean Voyager. When the sardines disperse, we traverse the depths and encounter other worldly creatures like the Dungeness Crab, King Crab, salmon, and many more.



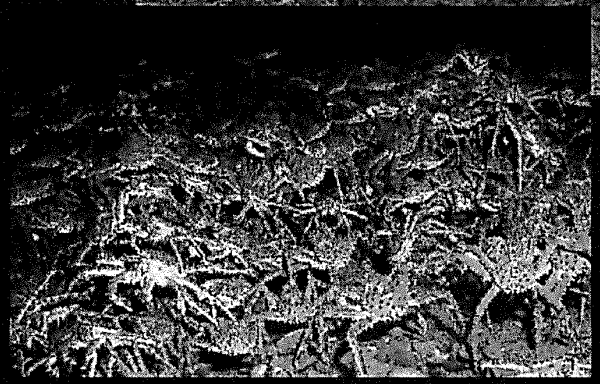

CONFIDENTIAL CONTENT DO NOT DISTRIBUTE ©2025 MALVERN ENTERTAINMENT

Sea Lion Encounter

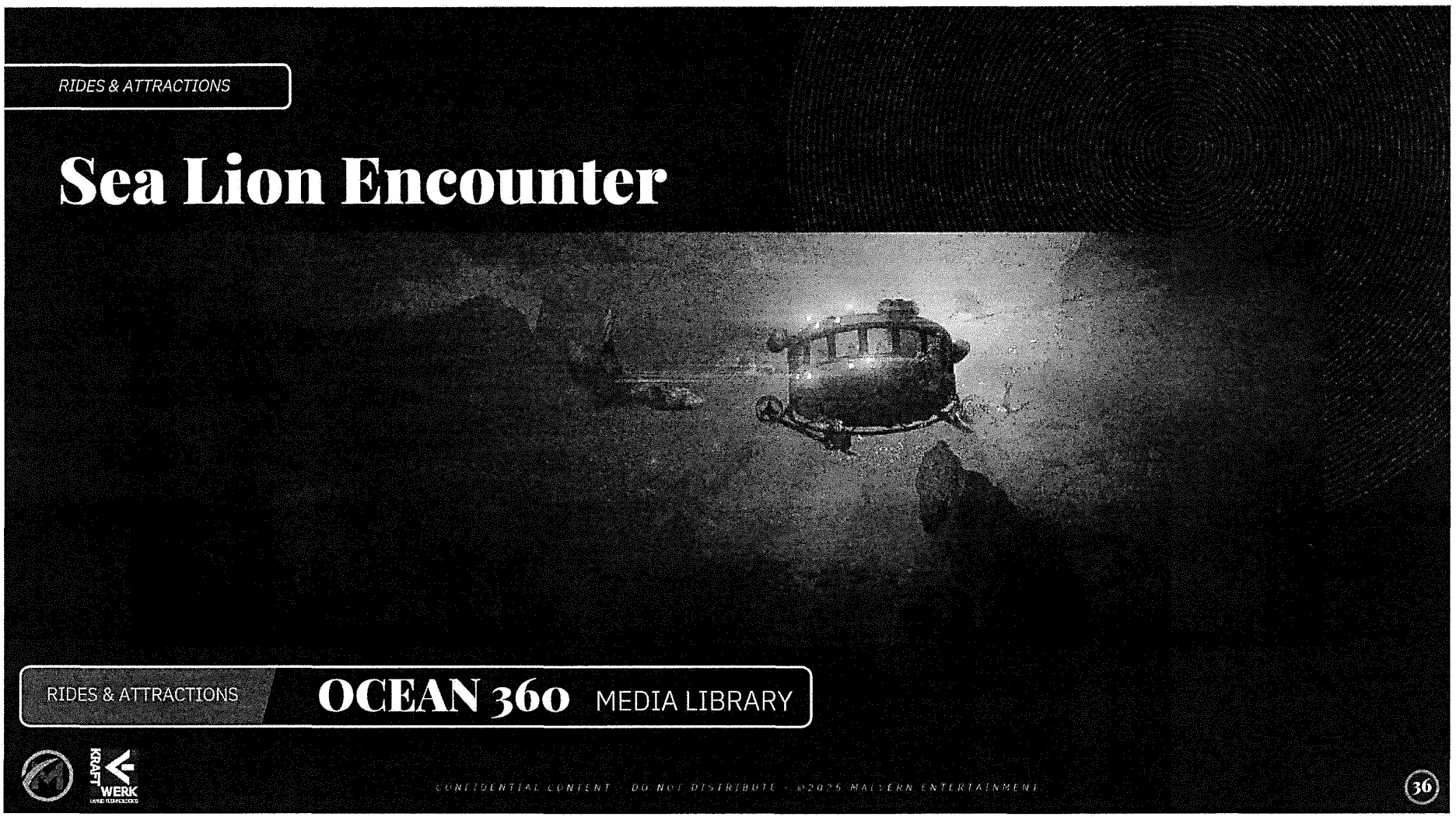

CONFIDENTIAL CONTENT - DO NOT DISTRIBUTE - ©2025 MALVERN ENTERTAINMENT

KRAFTWERK LIVING TECHNOLOGIES

TRANSFORMING IDEAS
EXCEEDING LIMITS

4D Theater featuring state-of-the-art 3D LED Magnos technology

TURN ON ACTION

As one of the world's leading professional 4D system integrators, Kraftwerk Living Technologies provides state-of-the-art 4D theater solutions perfectly tailored to the individual client's needs. By combining and integrating stunning special effects with perfectly synchronized 6DOF motion, we make sure that each and every guest experiences a unique and highly immersive 4D adventure. Kraftwerk Living Technologies is your expert in creating innovative 4D theater solutions and technologies that cannot fail to impress your guests!

INSTALLATION DESCRIPTION & COMPONENTS

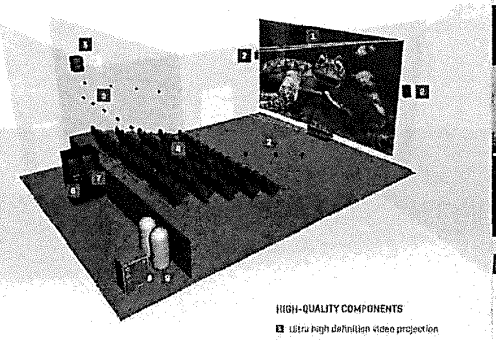

HIGH-QUALITY COMPONENTS

1. Ultra high definition video projection
2. Multi-channel surround sound system
3. Possible upgrade: immersive audio system
4. 4D SFX Motion Seats
5. 3D-capable projection screen
6. High-end video server
7. State-of-the-art show control system
8. Water treatment system
9. Compressed air system

HIGHLIGHTS

Our 4D theater technology sets the stage for showcasing various types of content in a variety of settings - from theme parks to museums, from entertainment to education.

- GREAT FLEXIBILITY WITH REGARDS TO VENUE SIZE
- LARGE HOURLY THROUGHPUT RATES POSSIBLE
- PNEUMATIC MOTION SYSTEM FOR SMOOTH AND REALISTIC MOTION
- HIGHEST SAFETY STANDARDS
- INNOVATIVE, CUSTOMIZED SOLUTIONS WITH STATE-OF-THE ART TECHNOLOGIES
- EXCITING HIGH-CLASS SPECIAL EFFECTS
- LARGE FLEXIBILITY WITH REGARDS TO CONTENT SHOWN

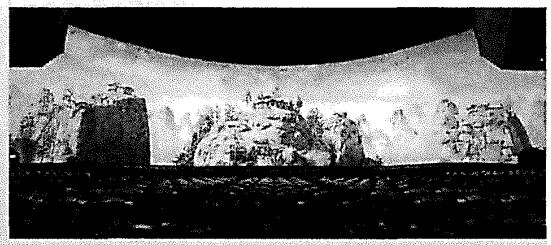

THE 4D SFX MOTION BASE

The 4D SFX Motion Seats developed by Kraftwerk Living Technologies round off our expertise in creating 4D theater solutions, allowing for the highest-quality experience, featuring 6DOF precision movement as well as the most comprehensive array of integrated in-seat special effects.



* Each bench is available as a regular, elevated or curved 9- as well as 6-seater unit, with a basic or special effects equipment.

www.kraftwerk.at

KRAFT WERK
LIVING TECHNOLOGIES

TRANSFORMING IDEAS
EXCEEDING LIMITS

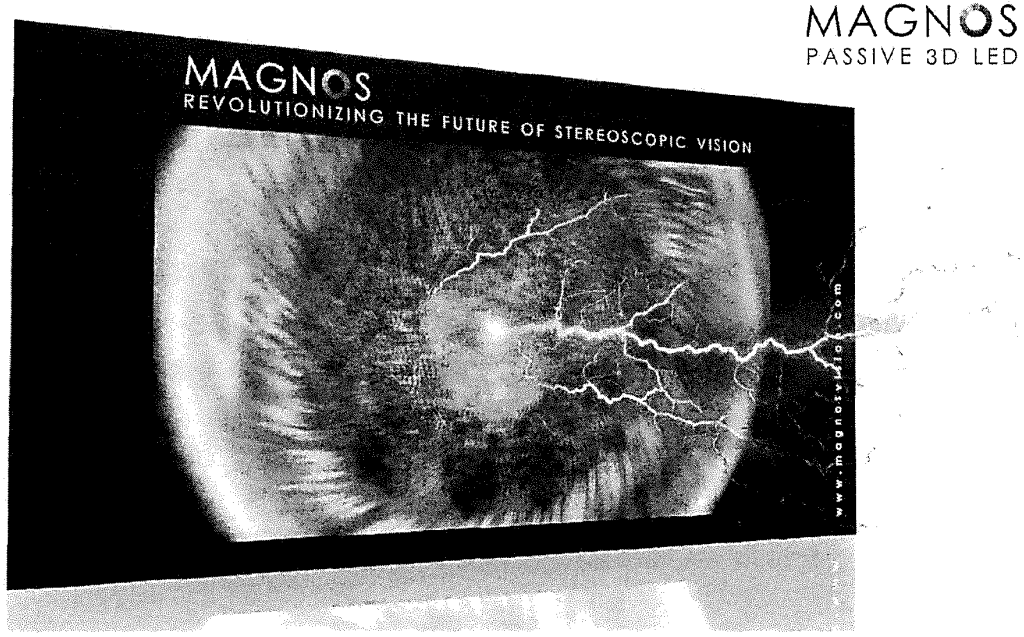

MAGNOS
PASSIVE 3D LED

www.kraftwerk.at

KRAFT WERK
LIVING TECHNOLOGIES

KLT → MOTION TECHNOLOGY

TRANSFORMING IDEAS EXCEEDING LIMITS







High-end, state-of-the-art 4D motion seat technology sets the stage for various types of content in a variety of settings - from theme parks to museums, from entertainment to education... bringing your story, your message, your brand and your art to life!

- » 3- or 4-seater unit
- » Electric or pneumatic drive
- » Basic version with regular armrest or advanced one with integrated special effects
- » Optional footrest
- » Curved version for flexible seat alignment

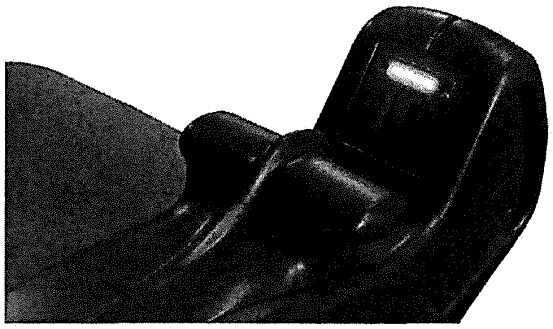

SFX IN SEAT

- » Dual Neck Blast
- » Poke Effect
- » Dual Leg Tickler
- » Seat Vibration
- » Water Spray
- » In-Seat Audio System

SFX IN ARMREST

- » Water Spray
- » Face Blast
- » Wind System
- » Strobe Flashlight
- » Face Light
- » Floor Illumination
- » Occupancy Sensor
- » Multi-Scent System

www.kraftwerk.at

Standard 4D Theater Layout and Seat configuration

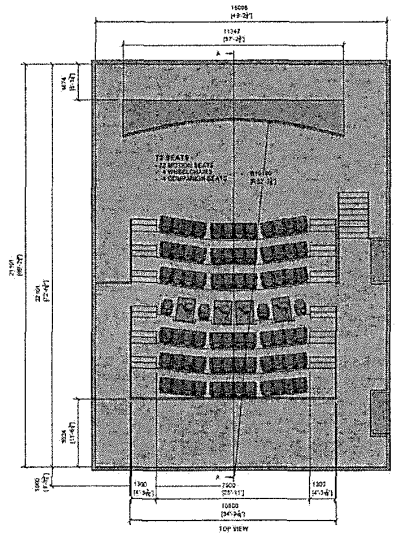

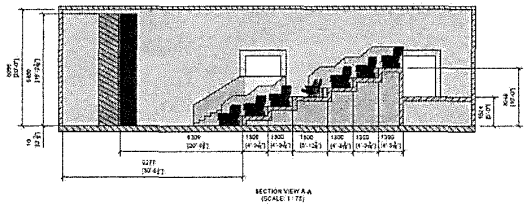

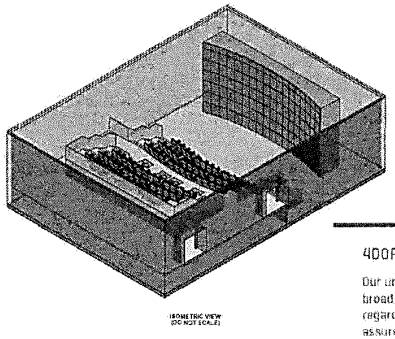

4DOF REAL ANALOG MOVEMENT

Our unique pneumatic motion base using an analog control system guarantees flowing, realistic motion and a broad range of programming possibilities. Our high-quality 4D SFX Motion Seat meets the highest standards regarding comfort and visual appearance. Featuring four Degrees of Freedom (4DOF), real analog movement assures that visitors get directly immersed in the action.

4 DEGREES OF FREEDOM

1. Pitch: Forward and backward
2. Roll: Tilt side to side
3. Heave: Tilt up and down
4. Sway: Move left and right

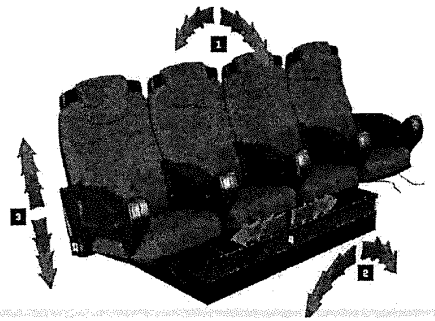

Alaskan Wonder Experience (AWE) LLC & Malvern Entertainment - Confidential Information - May Contain Trade Secrets - Do Not Distribute - All Rights Reserved


THANK YOU
We appreciate the opportunity to share our vision and look forward to working together to honor Juneau's history while creating new experiences for the community.
ALASKA
FLY & DIVE
Alaskan Wonder Experience (AWE) LLC & Malvern Entertainment - Confidential Information - May Contain Trade Secrets - Do Not Distribute - All Rights Reserved

APPENDIX

Alaskan Wonder Experience (AWE) LLC & Malvern Entertainment - Confidential Information - May Contain Trade Secrets - Do Not Distribute - All Rights Reserved

Community Impact & Involvement

Community Benefit Overview – Juneau Flying Theater & Submarine Experience

Our vision is to create a destination that celebrates Alaska's landscapes, culture, and community year-round. While the Flying Theater and Submarine Experience will attract visitors from May–September, the venue will transform into a civic and educational venue each October–April. Our goal is to serve Juneau residents through learning programs, community events, and discounted local access that enriches life for everyone who calls Southeast Alaska home.

Educational & Youth Engagement

Partner with Juneau School District to offer the "Flight & Depth: Alaska Adventures in Science" program for elementary school — a field trip experience combining the Flying Theater and Submarine rides with interactive STEM lessons about Alaska's geography, marine ecosystems, and aviation science. Curriculum packets align with Alaska State Science Standards, and students participate in immersive learning opportunities.

Alaskan Wonder Experience (AWE) LLC & Malvern Entertainment - Confidential Information - May Contain Trade Secrets - Do Not Distribute - All Rights Reserved

Community & Cultural Events (October–May)

MONTH	COMMUNITY EVENT & INITATIVE
October	JSD Elementary School Nield trips
November	Public Market participation
December	Gallery Walk / Governor's Mansion Open House / Family Weekends
January	Alaska State Legislators Reception Welcome Back with Free Rides
February	Elizabeth Peratovich Day / Juneau Jazz & Classics Jazz Fest
March	Gold Medal Basketball Tournament
April	Juneau Folk Festival Open Weekends; Host musical groups
May	Maritime Festival / Prom Night Discount / Safe Grad Free Rides for Seniors
June	Sealaska Heritage Institute Celebration

Local Access & Inclusion

- **Discounted Off-Season Tickets:** Deeply reduced pricing for Juneau residents October–April.
- **Sponsored School Visits:** Free admission for teachers and chaperones.
- **Locals Appreciation Days:** Weekend discounts.
- **Nonprofit & Civic Partnerships:** Foyer use for local fundraisers, meetings, and events.
- **Youth Celebrations:** Prom discounts and free Safe Grad graduation night rides to create positive, safe traditions.

By providing education, community, and cultural enrichment, our goal is to imbed this attraction into the cultural and education life of Juneau's civic life. These efforts will ensure the facility is not only an attraction for visitors, but a gathering place and source of pride and fun for locals throughout the year.

Letters of Support

Alaskan Wonder Experience (AWE) LLC & Malvern Entertainment - Confidential Information - May Contain Trade Secrets - Do Not Distribute - All Rights Reserved

JEDC
Juneau Economic Development Council

612 W. Willoughby Avenue
Juneau, AK 99801
Phone: (907) 523-2300
www.JEDC.org

December 1, 2025

City & Borough of Juneau
Attn: Mayor Weldon & Assembly Members
155 S Seward Street
Juneau, AK 99801

Esteemed Mayor Weldon and Members of the CBJ Assembly,

I am writing in support of Alaskan Wonder Experience (AWE) LLC's proposed Alaska Fly & Dive project and their application for a Conditional Use Permit from the City and Borough of Juneau (CBJ).

JEDC fosters a healthy and sustainable economic climate in Juneau and throughout Southeast Alaska. In collaboration with other organizations, JEDC implements initiatives to maintain, expand, and create economic opportunities. We help make Juneau a great (capital) city, strengthen key regional industries, promote entrepreneurship and small business, development talent, and much more.

Juneau is a world-class tourist destination and the most visited community in Alaska during the summer. People come from around the world to enjoy our incredible lands, waters, history, and unique ways of life. The growth in independent travelers and tour operators, expedition-style cruises, and fishing lodges, highlight an emerging trend beyond large cruise ship tourism. AWE LLC's Alaska Fly & Dive will be another opportunity for visitors to experience Juneau and Alaska's beauty through hands-on, immersive experiences. Furthermore, it will create a landmark attraction on the last vacant waterfront lot along the vibrant Franklin Street corridor, providing a new, welcoming space for visitors and community members alike. We applaud the vision of a local entrepreneur to substantially invest in our community and offer a unique experience to visitors to downtown Juneau.

I urge you to support AWE LLC's proposal for a Conditional Use Permit. By favorably considering their application, you will be taking a proactive step towards creating jobs and supporting local business while solidifying Juneau's place as a world-class destination.

Sincerely,

Brian Holst
Executive Director
bholst@jedc.org | (907) 523-2333

JUNEAU DOWNTOWN BUSINESS ASSOCIATION

December 3, 2025

City & Borough of Juneau
Attn: Mayor Weldon & Assembly Members
155 S Seward Street
Juneau, AK 99801

Dear Mayor Weldon and CBJ Assembly Members,

This letter is to express our strong support for both the Alaska Fly & Dive project as proposed by Alaskan Wonder Experience (AWE) LLC and their application for a Conditional Use Permit with the City and Borough of Juneau.

The DBA's mission is to promote a vibrant, resilient, and welcoming downtown for residents, visitors, and small businesses. We work directly with merchants, seasonal operators, property owners, local entrepreneurs, and community partners to maintain a safe, inviting commercial core that drives Juneau's economic health. Downtown thrives when innovative, locally driven ventures activate space, create new foot-traffic patterns, and encourage visitors to stay longer and explore more of our businesses.

This proposed project aligns precisely with these goals, especially given the anticipated growth of independent travelers, expedition-style cruises, and hands-on tourism experiences that present clear economic opportunities for Juneau. Alaska Fly & Dive would add a signature attraction to a currently vacant waterfront lot on the Franklin Street corridor—an area central to visitor engagement and year-round community life. Filling this long-inactive space with a high-quality, locally owned operation will increase downtown activity, enhance aesthetics, and reinforce the sense of place that makes Juneau memorable.

This project also supports the entrepreneurs who drive much of downtown's character. The willingness of local business owners to invest at this scale signals strong confidence in Juneau's future and creates related benefits such as more customers for nearby businesses, diversified tour offerings, and more reasons for visitors to spend time in our community.

The DBA encourages the Assembly to consider Alaska Fly & Dive not only as a tourism attraction, but as a downtown revitalization initiative—one that activates waterfront frontage, strengthens business vibrancy, and adds to the mix of high-quality experiences available to our guests. We respectfully urge you to approve AWE LLC's Conditional Use Permit application. Supporting this project is a direct investment in the vitality of downtown Juneau, the success of entrepreneurs, and Juneau's long-term prosperity.

Sincerely,

Nimmy J. Philips

Nimmy Philips, President
Downtown Business Association

TRAVEL JUNEAU

November 3, 2025

To Whom it May Concern,

On behalf of the Travel Juneau Board of Directors, I am pleased to provide this letter of support for the "Alaska Wonder Experience" (AWE), an attraction to be constructed adjacent to the Port of Juneau's dock system. The proposed project, which would include an immersive experience theater, food and beverage options, and the potential for year-round use, would fill a need in Juneau's visitor and community experiences.

Located on Franklin Street next to Marine Park Garage, the facility will have the capacity to entertain hundreds of visitors and locals each day of operation. Guests, seated in units that simulate the feeling of flight and diving, will be visually surrounded by Juneau's scenery, wildlife, and marine life. A variety of productions are planned, including seasonal, holiday, and other offerings. The Alaska Wonder Experience will also be available periodically throughout the shoulder and winter seasons, providing a much-needed year-round, indoor activity at a lower price point for locals.

Further, the facility can serve as event space for the community, as well as an offsite option for groups and meetings. The owners are also considering ways to make the facility available to the Juneau School District to augment their science curricula. As a developed property, AWE will also pay CBJ sales tax and property tax, and employ a local staff. The business requires no shuttle parking and will not impact viewing of the Elizabeth Peratrovich mural.

The proposed Alaska Wonder Experience has the potential to be a premier, family-friendly attraction for our community, available and accessible for locals and visitors. It will fill a need for indoor activities that reflect our community and area. For these reasons, Travel Juneau supports this proposed development for downtown Juneau.

Sincerely,

Liz Perry
President & CEO
Travel Juneau

800 Glacier Ave., Ste. 201, Juneau, AK 99801
Toll Free (888) 581-2201 • (907) 586-2201 • traveljuneau.com

Society of St. Vincent de Paul
St. Therese Conference
8617 Teal Street
Juneau, AK 99801

"We provide material and spiritual charity and work for social justice for all people"

12/09/2025

Reuben Willis
2908 Jackson Rd
Juneau, AK 99801

To whom it may concern,

The Society of St. Vincent de Paul strongly supports the development of 356 S Franklin Street lot. This development will bring so much to Juneau.

We acknowledge the project will slightly affect the current view from one of our nearby buildings. After review, we find this minor visual impact is vastly outweighed by the need to develop the area and bring more entertainment options to Juneau. We at SVDP are in full support of this project.

Thank you for your consideration, please feel free to contact me with any questions, at 907-713-5622.

Regards,

Executive Director

St. Vincent de Paul Saint Therese Conference

jennifer@svdpjuneau.org

907-713-5622

JUNEAU DOWNTOWN HISTORIC DISTRICT

Ordinance 2013-01

Adopted January 28th, 2013

NOTE:
The Historic District Boundary includes the street but not the building facades unless the boundary is shown inside the property line.

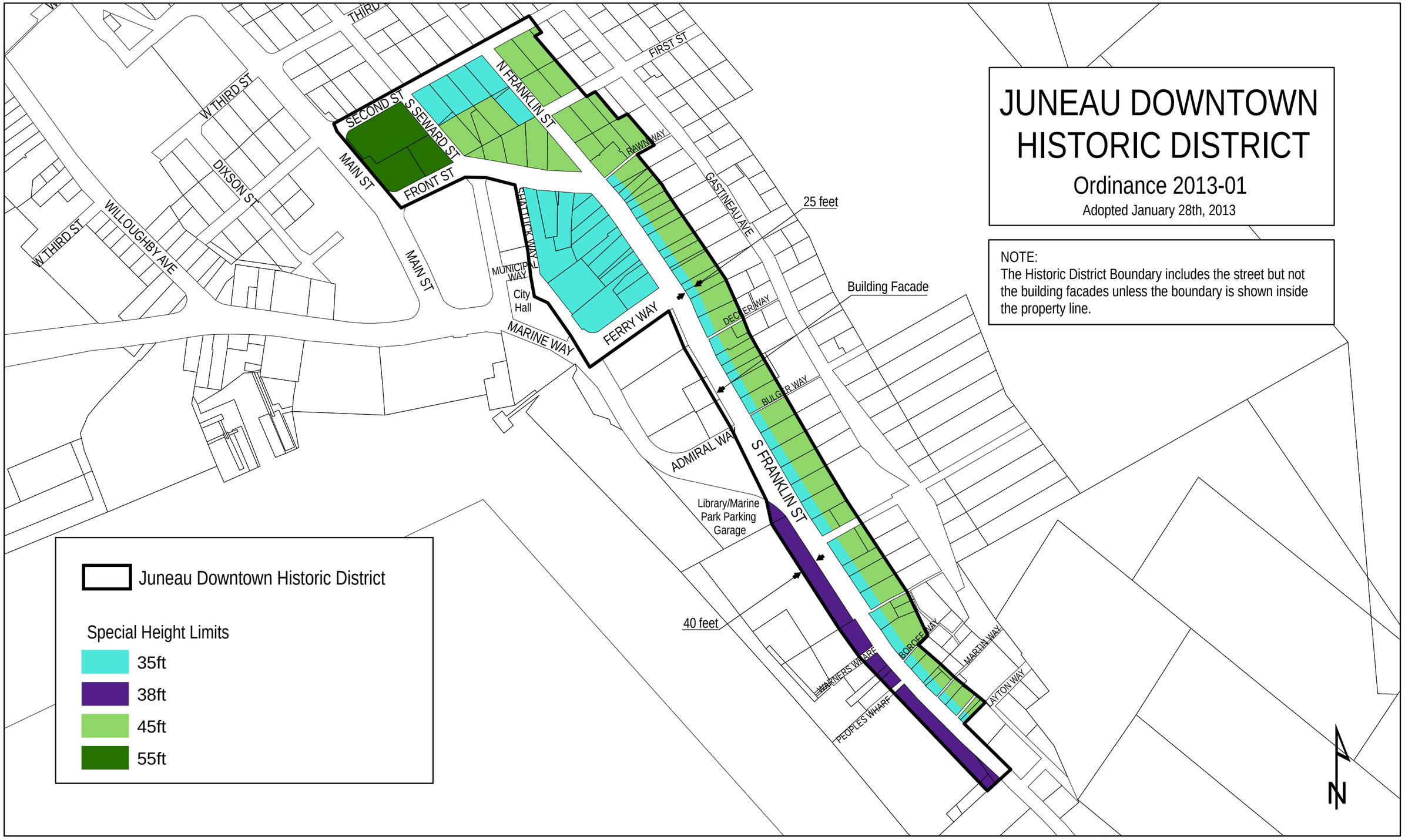

Project Source: F :\gis_work\Quinn\Projects\CDD\historic boundary adjustment.mxd

Attachment B – Juneau Downtown Historic District Map

OWNERSHIP CERTIFICATE

ARCHIPELAGO PROPERTIES, LLC HEREBY CERTIFY THAT THE CORPORATION IS THE OWNER OF LOTS 1 AND 2 AS SHOWN AND DESCRIBED HEREON AND THAT THE CORPORATION HEREBY ADOPTS THIS PLAT OF SUBDIVISION WITH FREE CONSENT, AND DEDICATES ALL STREETS, ALLEYS, WALKS, PARKS AND OTHER OPEN SPACE TO PUBLIC OR PRIVATE USE AS NOTED.

DATE 5-20-2019

BY _____

CRAIG MITCHELL
SENIOR VICE PRESIDENT
SHIVERS LENDING, LLC, SOLE MEMBER
ARCHIPELAGO PROPERTIES, LLC

NOTARY ACKNOWLEDGEMENT

STATE OF GEORGIA)
)S.S.
COUNTY OF RICHMOND)

THIS IS CERTIFY THAT ON THIS 20th DAY OF May 2019 BEFORE ME THE UNDERSIGNED, A NOTARY PUBLIC IN AND FOR THE STATE OF GEORGIA, DULY COMMISSIONED AND SWORN, PERSONALLY APPEARED Craig S. Mitchell TO ME KNOWN TO BE THE PERSON DESCRIBED IN AND WHO EXECUTED THE ABOVE AND FOREGOING INSTRUMENT, AND ACKNOWLEDGED TO ME THAT HE/SHE SIGNED AND SEALED THE SAME FREELY AND VOLUNTARILY FOR THE USES AND PURPOSES THEREIN MENTIONED, BEING FULLY AUTHORIZED TO DO SO. WITNESS MY HAND AND OFFICIAL SEAL THE DAY AND YEAR THIS CERTIFICATE FIRST ABOVE WRITTEN.

NOTARY PUBLIC FOR GEORGIA _____

MY COMMISSION EXPIRES 11-13-2020

Notary Public, Richmond County, Georgia, My Commission Expires November 13, 2020

OWNERSHIP CERTIFICATE

THE CITY AND BOROUGH OF JUNEAU, ALASKA (CBJ) HEREBY CERTIFY THAT CBJ IS THE OWNER OF LOTS 3 AND 4 AS SHOWN AND DESCRIBED HEREON AND THAT CBJ HEREBY ADOPTS THIS PLAT OF SUBDIVISION WITH FREE CONSENT, AND DEDICATES ALL STREETS, ALLEYS, WALKS, PARKS, AND OTHER OPEN SPACES TO PUBLIC OR PRIVATE USE AS NOTED.

DATE May 23 2019

BY _____

GREGORY CHANEY
LANDS AND RESOURCES MANAGER
CITY AND BOROUGH OF JUNEAU

NOTARY ACKNOWLEDGEMENT

STATE OF ALASKA)
)S.S.
FIRST JUDICIAL DISTRICT)

THIS IS CERTIFY THAT ON THIS 23rd DAY OF May 2019 BEFORE ME THE UNDERSIGNED, A NOTARY PUBLIC IN AND FOR THE STATE OF ALASKA, DULY COMMISSIONED AND SWORN, PERSONALLY APPEARED Gregory P. Chaney TO ME KNOWN TO BE THE PERSON DESCRIBED IN AND WHO EXECUTED THE ABOVE AND FOREGOING INSTRUMENT, AND ACKNOWLEDGED TO ME THAT HE/SHE SIGNED AND SEALED THE SAME FREELY AND VOLUNTARILY FOR THE USES AND PURPOSES THEREIN MENTIONED, BEING FULLY AUTHORIZED TO DO SO. WITNESS MY HAND AND OFFICIAL SEAL THE DAY AND YEAR THIS CERTIFICATE FIRST ABOVE WRITTEN.

STATE OF ALASKA
OFFICIAL SEAL
Susan B. Phillips
NOTARY PUBLIC
My Commission Expires 1/10/22

NOTARY PUBLIC FOR ALASKA Susan B. Phillips

MY COMMISSION EXPIRES 1/10/22

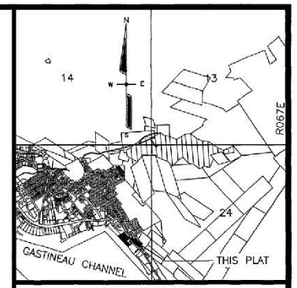

VICINITY MAP
SCALE 1" = 1/2 MILE

DETAIL A
SCALE 1" = 2'

DETAIL B
SCALE 1" = 2'

SOUTH FRANKLIN STREET R/W VARIES

BASIS OF BEARING S35°56'28"E 2546.74'

WARNERS WHARF 20' R/W

PEOPLES WHARF 10' R/W

LOT 1A
0.79 AC.
33875 S.F.

LOT 2A
0.87 AC.
38133 S.F.

LOT 4A
0.86 AC.
37378 S.F.

LOT 1 PLAT NO. 340

LOT 2 PLAT NO. 340

LOT 6 PLAT NO. 340

LOT 8 PLAT NO. 340

LOT 10 PLAT NO. 340

LOT 11 PLAT NO. 340

LOT 12 PLAT NO. 340

LOT 13A PLAT NO. 86-3

LOT 13C PLAT NO. 2003-8

FR. LOT 9B BK: 554 PG: 470

FR. LOT 9B MINER'S HALL TIDELAND LEASE JUNEAU DOC. 2006-006404-0

LOT 6 N30°01'00"W 0.72' S61°56'58"E 114.89' LOT 1A LOT 2 N60°04'20"E 138.37' S5.15'

N34°13'38"W 90.01' (S34°13'04"E 90.07')

N34°08'46"W 90.07' (S34°08'12"E 90.07')

N34°05'12"W 45.00' S34°00'49"E 60.00' 42.30' S34°21'58"E 24.72'

12.58' 5' 5.12' S57°15'00"W 41.12' 67' 10'

50.00 PUBLIC ACCESS ESMT VACATED THIS PLAT

CONSTRUCTION AND MAINTENANCE EASEMENT DEDICATED THIS PLAT

ACCESS AND UTILITY EASEMENT JUNEAU DOC. (CURRENTLY UNRECORDED)

N61°56'58"E 121.39' (N61°57'20"W 121.28') 114.89' (114.81')

DETAIL A

DETAIL B

N60°04'20"E 138.37' 2' 20' 10' N34°08'51"W 98.59' N79°08'51"W 45.00' N34°08'51"W 28.28' 10'

FORMER LOT 1 FORMER LOT 2 FORMER LOT 3 FORMER LOT 4

VACATED PROPERTY LINE

S79°08'51"E 141.90'

S57°15'00"W 126.41'

S31°34'15"E 89.27'

S36°48'30"E 20.00' S36°48'30"E 47.96' S36°48'30"E 31.00' S41°17'30"E 20.70' S41°26'39"E 32.91' N41°17'30"W 20.70' N36°48'30"W 95.97' (N36°48'30"W 96.00')

N57°13'37"E 76.04' S41°40'00"E 90.49' S42°22'15"E 51.12' S43°26'20"E 189.99' (N41°40'00"W 350.67') N41°40'00"W 350.62'

N60°04'20"W 76.18' S60°04'20"W 41.14' N43°26'20"W 215.80'

TIMBERWOLF VENTURES TIDELAND LEASE JUNEAU DOC. 2015-002356-0

MINERS HALL BATTER PILE EASEMENT JUNEAU DOC. 2006-006405-0

TRIPP CORP TIDELAND LEASE JUNEAU DOC. 2019-000849-0

PEOPLES WHARF TIDELAND LEASE JUNEAU DOC. 2007-003690-0

TRIPP CORP. TIDELAND LEASE JUNEAU DOC. 2019-000849-0

PEOPLES WHARF TIDELAND LEASE JUNEAU DOC. 2007-003690-0

LOT 11

LOT 4A

S41°26'39"E 32.91' N48°37'00"E 1.02' S41°17'30"E 20.70'

GASTINEAU CHANNEL

LEGEND

- RECOVERED ALUMINUM MONUMENT
- RECOVERED ½" REBAR WITH PLASTIC CAP 7712-S
- COMPUTED CORNER, NOTHING FOUND OR SET
- SET ⅝" X 30" REBAR WITH 1 ½" STAINLESS STEEL CAP, LS 107707
- SET PK NAIL WITH 1 ½" STAINLESS STEEL FLASHER, LS-107707
- ( ) RECORD DATA, SEE NOTES 3 & 4
- EASEMENT VACATED THIS PLAT
- VACATED PROPERTY LINE
- EASEMENT DEDICATED THIS PLAT
- TIDELAND LEASE LINE
- SURVEY TIE
- EXISTING EASEMENT LINE
- SURVEYED LOT LINE
- SURROUNDING STATUS LINE

TYPICAL CAP SET

SCALE
1"=30' 0 10 20 30 60 90
US FEET

BASIS OF BEARING

THE BASIS OF BEARING FOR THIS PLAT IS THE CALCULATED RECORD BEARING OF S35°56'28"E BETWEEN THE NORTH CORNER OF LOT 7A, BLOCK 83, TIDELANDS ADDITION TO THE CITY OF JUNEAU, PLAT NO 87-10 AND THE RESET MARKING RM C44 ATS NO. 3, AS NOTED.

NOTES

1. THE ERROR OF CLOSURE OF THIS SURVEY DOES NOT EXCEED 1:5000
2. ALL DISTANCES ARE MEASURED IN U.S. SURVEY FEET, REDUCED TO HORIZONTAL.
3. RECORD INFORMATION DERIVED FROM ARCHIPELAGO SUBDIVISION, A SUBDIVISION OF LOT 7A1, LOT 9A AND FRACTION OF LOT 9B, BLOCK 83 TIDELANDS ADDITION, ATS NO. 3, PLAT NO. 2013-22. RECORD INFORMATION ALSO OBTAINED FROM JUNEAU DOCUMENT NO. 2015-002355-0.
4. WHERE DIFFERENT FROM MEASURED OR CALCULATED, RECORD DIMENSIONS ARE SHOWN IN PARENTHESIS
5. PARTS OF THIS SUBDIVISION ARE LOCATED IN A VELOCITY FLOOD ZONE, ACCORDING TO THE ADOPTED FLOOD INSURANCE RATE MAPS OF THE CITY AND BOROUGH OF JUNEAU. SPECIAL REGULATIONS MAY APPLY.
6. IN ACCORDANCE WITH CITY CODE, THE COMMUNITY DEVELOPMENT DIRECTOR AMENDED THE LANDSLIDE AND AVALANCHE MAPS TO REMOVE FORMER LOTS 1, 2, 3, AND 4 FROM THE MODERATE HAZARD ZONE (AME2018-0010).
7. EXECUTION OF THIS PLAT VACATES THE EXISTING 50' PUBLIC ACCESS EASEMENT, DEDICATED BY PLAT 2013-22, FROM SOUTH FRANKLIN STREET TO LOT 4.
8. DOMESTIC WATER AND SANITARY SEWER DISPOSAL PROVIDED BY THE CITY AND BOROUGH OF JUNEAU PUBLIC UTILITIES.
9. THE VERTICAL DATUM FOR THIS SURVEY IS MEAN LOWER LOW WATER BASED ON A GPS RTK TIE TO NOAA BENCH MARK "2210 K 2011" LOCATED AT THE BASE OF A FLAGPOLE BY THE JUNEAU ARTS/CULTURE CENTER WITH A PUBLISHED ELEVATION OF 27.10' MLLW.
10. THIS SUBDIVISION IS AFFECTED BY A CITY OF JUNEAU DOCK MAINTENANCE, OPERATION AND RECONSTRUCTION EASEMENT, DATED FEBRUARY 14, 1967, RECORDED AS JUNEAU BOOK 85, PAGE 20, LOCATION UNDETERMINED AND NOT SHOWN HEREON
11. THIS SUBDIVISION IS AFFECTED BY A CITY OF JUNEAU JOINT USE AND OCCUPANCY EASEMENT, DATED AUGUST 05, 1964, RECORDED AS BOOK 73 PAGE 335, LOCATION UNDETERMINED AND NOT SHOWN HEREON.

CITY & BOROUGH OF JUNEAU

COMMUNITY DEVELOPMENT APPROVAL

I HEREBY CERTIFY THAT THE PLAT HEREON HAS BEEN FOUND TO COMPLY WITH TITLE 49 OF THE CODE AND CITY AND BOROUGH OF JUNEAU AND IS APPROVED BY THE CITY AND BOROUGH OF JUNEAU, DEPARTMENT OF COMMUNITY DEVELOPMENT, FOR RECORDING IN THE OFFICE OF THE JUNEAU RECORDING DISTRICT, JUNEAU, ALASKA.

BY _____ DATE 5/28/2019

JILL MACLEAN, DIRECTOR
CITY AND BOROUGH OF JUNEAU
COMMUNITY DEVELOPMENT DEPARTMENT

PND LS-107707

Attest: Elizabeth J. McEwen, Municipal Clerk
City and Borough of Juneau

SURVEYORS CERTIFICATE

I, IAIN BROWN, IN MY CAPACITY AS A PROFESSIONAL LAND SURVEYOR REGISTERED IN THE STATE OF ALASKA, CERTIFY THAT THIS PLAT REPRESENTS THE SURVEY MADE BY ME OR UNDER MY DIRECT SUPERVISION, THAT THE ACCURACY OF THE SURVEY IS WITHIN THE LIMITS REQUIRED BY TITLE 49 OF THE CODE OF THE CITY AND BOROUGH OF JUNEAU, THAT ALL DIMENSIONAL AND RELATIVE BEARINGS ARE CORRECT, AND THAT MONUMENTS ARE SET IN PLACE AND NOTED UPON THIS PLAT AS PRESENTED.

Date 5/15/19

STATE OF ALASKA
49TH
IAIN C. BROWN
LS-107707
5/15/19
REGISTERED PROFESSIONAL LAND SURVEYOR

2019-19
Plat #
Juneau
Rec'd
5/29/19
Date
10:35AM
Time

PLAT OF
LOTS 1A, 2A, & 4A
A SUBDIVISION OF
LOTS 1,2,3, & 4
ARCHIPELAGO SUBDIVISON
WITHIN CITY & BOROUGH OF JUNEAU, ALASKA
JUNEAU RECORDING DISTRICT

STATE RECORDER'S OFFICE AT JUNEAU

OWNERS: ARCHIPELAGO PROPERTIES LLC, ONE SEALASKA PLAZA, STE 300, JUNEAU, ALASKA 99801 & CITY AND BOROUGH OF JUNEAU, 155 SOUTH SEWARD STREET, JUNEAU, ALASKA 99801

PND ENGINEERS, INC
1506 West 36th Avenue
Anchorage, Alaska 99503 Phone: 907.561.1011
www.pndengineers.com
AK. LIC# AECC250

SCALE:	1" = 30'	FIELD BOOK:	N/A	GRID:	JUNEAU
DESIGNED BY:	IB	DATE:	2/21/19	CASE NO:	MIP2019 0004
CHECKED BY:	DS/MW	PROJECT NO:	182045	SHEET NO:	1 OF 1

Planning Commission
(907) 586-0715
PC_Comments@juneau.org
www.juneau.org/plancomm
155 S. Seward Street • Juneau, AK 99801

PLANNING COMMISSION
NOTICE OF DECISION
Date: February 3, 2020
Case No.: USE2019 0021

Tidland/Schmidt Architects, P.C.
ATTN: Frank Schmidt
3611 SW Hood Ave, Suite 200
Portland, OR 97239

Proposal:	A Conditional Use Permit for two (2) two-story, commercial mixed-use buildings
Property Address:	365 S. Franklin Street
Legal Description:	Archipelago Lot 1A
Parcel Code No.:	1C070K830022
Hearing Date:	January 28, 2020

The Planning Commission, at its regular public meeting, adopted the analysis and findings listed in the attached memorandum dated January 21, 2020, and approved the Conditional Use Permit for two (2) two-story, commercial mixed-use buildings, to be conducted as described in the project description and project drawings submitted with the application and with the following conditions as amended during the meeting:

1. Prior to issuance of a Building Permit, the applicant shall submit a lighting plan illustrating the location and type of exterior lighting proposed for the development. All exterior lighting fixtures shall be of a "full cutoff" design, and exterior lighting shall be designed and located to minimize offsite glare. Approval of the plan shall be at the discretion of the Community Development Department, according to the requirements at CBJ 49.40.230(d).
2. Exterior lighting shall not be used in a manner that produces glare on public highways or neighboring property.
3. Prior to issuance of a Building Permit, the applicant must submit documentation to demonstrate that all applicable parking code requirements have been met, in conformance with CBJ 49.40.200.

4. The applicant shall consider all possible tools and avenues available to ensure year-round occupancy of the structures, including, but not limited to, housing.

Attachments: January 21, 2020 memorandum from Teri Camery, Community Development, to the CBJ Planning Commission regarding USE2019 0021.

This Notice of Decision does not authorize construction activity. Prior to starting any project, it is the applicant's responsibility to obtain the required Building Permits.

This Notice of Decision constitutes a final decision of the CBJ Planning Commission. Appeals must be brought to the CBJ Assembly in accordance with CBJ 01.50.030. Appeals must be filed by 4:30 P.M. on the day twenty days from the date the decision is filed with the City Clerk, pursuant to CBJ 01.50.030 (c). Any action by the applicant in reliance on the decision of the Planning Commission shall be at the risk that the decision may be reversed on appeal (CBJ 49.20.120).

Effective Date: The permit is effective upon approval by the Commission, January 28, 2020

Expiration Date: The permit will expire 18 months after the effective date, or July 28, 2021, if no Building Permit has been issued and substantial construction progress has not been made in accordance with the plans for which the development permit was authorized. Application for permit extension must be submitted thirty days prior to the expiration date.

Project Planner: _____ _____ for ML

Teri Camery, Senior Planner
Community Development Department

Michael LeVine, Chair
Planning Commission

_____ 2/3/2020

Filed With Municipal Clerk

Date

cc: Plan Review

NOTE: The Americans with Disabilities Act (ADA) is a federal civil rights law that may affect this development project. ADA regulations have access requirements above and beyond CBJ-adopted regulations. Owners and designers are responsible for compliance with ADA. Contact an ADA - trained architect or other ADA trained personnel with questions about the ADA: Department of Justice (202) 272-5434, or fax (202) 272-5447, NW Disability Business Technical Center (800) 949-4232, or fax (360) 438-3208.

CITY AND BOROUGH OF JUNEAU
ALASKA'S CAPITAL CITY
COMMUNITY DEVELOPMENT

(907) 586-0715
CDD_Admin@juneau.org
www.juneau.org/CDD
155 S. Seward Street • Juneau, AK 99801

DATE: January 21, 2020

TO: Planning Commission

FROM: Teri Camery, Senior Planner
Community Development Department

CASE NO.: USE2019 0021

PROPOSAL: A Conditional Use Permit for two (2) two-story commercial mixed use buildings

GENERAL INFORMATION

Applicant:	Tidland/Schmidt Architects, P.C.
Property Owner:	Archipelago Properties, LLC
Property Address:	365 S. Franklin Street
Legal Description:	Archipelago Lot 1A
Parcel Code Number:	1C070K830022
Site Size:	33,875 square feet
Comprehensive Plan Land Use Designation:	Marine Commercial
Zoning:	Waterfront Commercial
Utilities:	City water and sewer
Access:	South Franklin Street
Existing Land Use:	Vacant lot
Surrounding Land Use:	North - Library and parking garage; Waterfront Commercial South - Retail; Waterfront Commercial East - South Franklin Street; Mixed Use

West - Cruise ship dock; Waterfront Commercial

VICINITY MAP

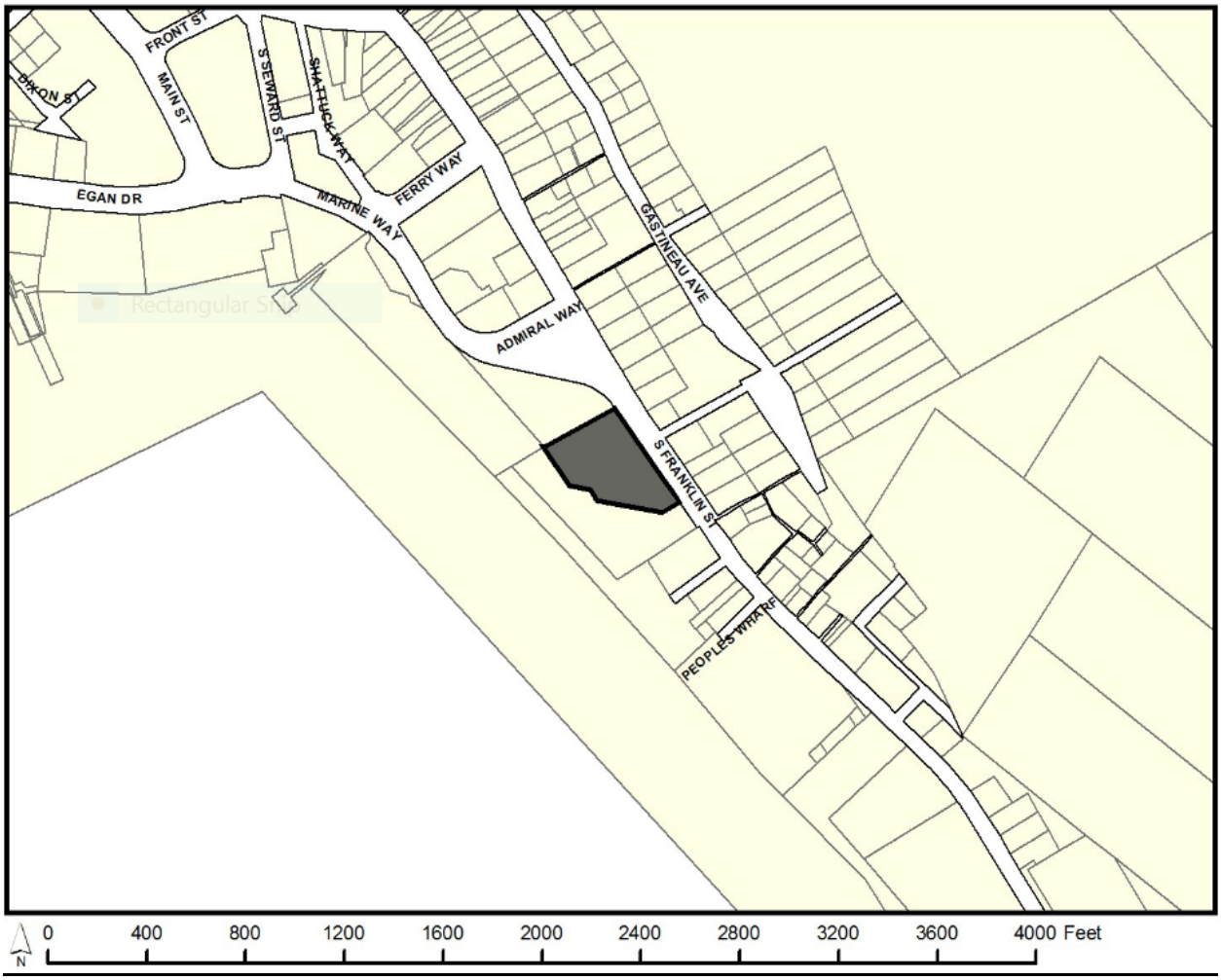

ATTACHMENTS

Attachment 1 Development Permit Application
Attachment 2 Conditional Use Permit Application
Attachment 3 Pre-application conference meeting notes
Attachment 4 Historic Resources Advisory Committee letter, 12-13-19
Attachment 5 Project Narrative
Attachment 6 Hazard Map Amendment Notice of Decision
Attachment 7 Preliminary Construction Schedule
Attachment 8 Subdivision Plat

Attachment 9 Landscaping Plan
Attachment 10 Pedestrian Circulation Plan
Attachment 11 Drainage Plan
Attachment 12 Utility Plan
Attachment 13 Flood map drawing
Attachment 14 General Site Development Plan
Attachment 15 Setback Plan
Attachment 16 First and Second floor site plans
Attachment 17 Building height calculations and exterior elevations
Attachment 18 Project renderings
Attachment 19 Site photometrics and light fixture types
Attachment 20 Color and material boards
Attachment 21 USE2018 0015 City Project application, adjacent to the development
Attachment 22 USE2018 0015 Notice of Decision
Attachment 23 Historic District Boundary Map
Attachment 24 Agency comments
Attachment 25 Leasing Plans
Attachment 26 Downtown Historic District Design Standards and Guidelines, Chapters 4, 5 & 7

PROJECT DESCRIPTION

The applicant requests a Conditional Use Permit for the development of two (2) two-story mixed-use commercial buildings on the downtown waterfront adjacent to the downtown library/parking garage. Leasing plans included in Attachment 25 indicate two commercial options: one, a combination of retail, office, and restaurant uses; and two, retail, office, and storage uses. The first 40 feet of the property lies with the Downtown Historic District, as shown in Attachment 23; review therefore includes an analysis of Historic District guidelines and recommendations.

The applicant has requested a Variance to reduce the parking requirement from 80 off-street spaces to zero spaces, concurrently under review as VAR2019 0005. The Variance is based on the option with the highest parking requirement, which includes the restaurant instead of storage.

BACKGROUND

The development is adjacent to a recently approved City and Borough of Juneau (CBJ) development that includes a transportation staging area and public restrooms. The CBJ development was approved as USE2018 00015/CSP2018 0010 and FZE2018 00001 on November 15, 2018. The project application and final Notice of Decision for the CBJ development are included in Attachments 21 and 22.

The subject property is the site of the former Juneau Cold Storage building, which burned in the

1980s. The property has been mostly vacant since Archipelago Properties LLC purchased it; for several years, however, it was leased to private businesses for seasonal food and retail uses.

The proposed development is the result of several years of cooperation and coordination between Archipelago Properties LLC and CBJ Docks and Harbors, starting in 2017. These efforts addressed property boundaries, project design, and public amenities. (Project Narrative p. 13, Attachment 5) The final plat delineating Archipelago and CBJ property was approved in May 2019 at Plat 2019-19, included in Attachment 8.

ANALYSIS

Project Site and Design

The site is zoned Waterfront Commercial, which requires uses to be water-dependent, water-related, or water-oriented. These definitions are listed in CBJ 49.80.120 as follows:

> *Water-dependent means a use or activity which can be carried out only on, in, or adjacent to water areas because the use requires access to the water body.*
>
> *Water-oriented means uses or mixtures of uses which would benefit from being near the water and are intrinsic to waterfront development and which meet all of the following criteria:*
>
> *(1) Uses must be part of a larger fully-planned development which also incorporates water-dependent or water-related uses;*
> *(2) Uses which are not directly water-dependent or water-related must be necessary to the overall development of the project;*
> *(3) Uses must be integrated functionally by architectural and site designs which are sensitive to the waterfront site;*
> *(4) Uses must act as economic stimuli and anchor points to enable other forms of development, particularly public access improvements; and*
> *(5) Uses must contribute to a diverse and healthy downtown core.*
>
> *Water-related means a use or activity which is not directly dependent upon access to a water body, but which provides goods or services that are directly associated with water dependence and which, if not located adjacent to water, would result in a public loss of quality in the goods or services offered.*

The proposed development is consistent with the water-related definition because the commercial development provides goods and services which are directly associated with the water-dependent cruise ship mooring facility.

Setbacks and Height Requirements

Waterfront Commercial requires 10-foot setbacks on all sides. Waterfront Commercial also has a 35-foot height limit. In addition, the development must comply with Historic District height recommendations and setbacks whenever practicable, within the first 40 feet of the development that falls within the district. Recommended Historic District setbacks are zero feet on the front and sides, with a height limitation of 38 feet.

Project drawings in attachments 16 and 17 demonstrate that the development complies with height requirements. Waterfront Commercial setbacks have been followed in the rear, both sides, and for the front setback of Building A. Building B complies with the zero-foot front setback recommended in the Historic District plan.

Historic District Requirements

The first 40 feet of the property is located within the Downtown Historic District (Attachment 23). Therefore Downtown Historic District Standards and Guidelines apply, specifically those listed in Chapter 4, Design Guidelines for Historic Building Materials; Chapter 5, Design Guidelines for Historic Building Elements; and Chapter 7, Design Guidelines for New Construction. These chapters are provided for reference in Attachment 26.

The current Historic District Map was adopted by ordinance in 2013 (Serial No. 2013-01). CBJ Code 49.70.530, Standards for Historic District Design Review, states that the reviewing body (the Planning Commission, when a Conditional Use Permit is required) shall use "applicable guidelines and policies contained in the downtown historic development plan." Staff notes that though the historic district map has been adopted, the Downtown Historic District Standards and Guidelines have not been officially adopted in the 2013 Juneau Comprehensive Plan or in the Land Use Code.

The Historic District Advisory Committee (HRAC) reviewed the development with the applicant at its December 6, 2019 meeting. The HRAC provided a letter dated December 13, 2019 with recommendations, included as Attachment 4. The HRAC found many aspects of the design that comply with the Downtown Historic District Design Standards and Guidelines including: the first floor transparency along South Franklin Street; the placement of a canopy above the first floor along South Franklin Street; the height and scale of the buildings; the spacing of façade doors and windows; and the decorative paving feature under the central canopy. The applicant's Project Narrative (Attachment 5, pp. 7-11) includes a point by point response to all 12 points in these recommendations. Color and material boards are also provided in Attachment 20.

Staff respectfully suggests that Commissioners read the HRAC letter and the applicant's response in full. A partial summary is provided below:

- The development meets the recommended Historic District front yard setback of zero on

Building B. The applicant has explained that it is not possible to meet the zero-foot front yard setback on Building A, nor the recommended zero-foot side yard setbacks, due to the loading zone on the south side and the underground utilities on the north side.

- The applicant has altered the gable roof design and replaced it with a peaked false front design per HRAC's recommendation. The applicant disagrees with HRAC's recommendation to remove the clock tower; it therefore remains in the plans.
- The development includes a canopy as required in the Historic District, however HRAC has recommended a different design for the central canopy with a flat roof. The applicant disagrees and notes that the section 7.13 allows for new interpretations of traditional building styles.
- The applicant requests the option to use single- or double-hung windows on the second story, rather than just double-hung as stated by the HRAC and noted in Section 7.26-7.28.
- The HRAC recommends horizontal siding rather than vertical, in accordance with 7.11. The applicant would like to use both approaches.
- The applicant has developed a recessed entryway on the right-of-way line on South Franklin but requests flexibility with other entryways.
- The applicant has incorporated kick plates into the design as recommended.

Although the design features of the buildings contribute to the overall character of the development, certain design features will be more visible than others. Directly across South Franklin Street are two historic buildings that are listed as "contributing" to the authenticity of the Downtown Historic District. Both of these historic buildings have horizontal siding on the first and second floors. With this in mind, staff recommends as a condition of approval that the applicant be required to use horizontal siding on the first floor, as follows:

1. The development shall utilize horizontal siding on the first floor of both buildings.

With this recommended condition, staff concludes that the proposed development significantly complies with the Historic District Plan.

Parking

The proposed development includes one loading zone on the southwest side of the property, most clearly shown in the Leasing Plans, Attachment 25. The applicant has requested a Variance to reduce the off-street parking requirement from 80 spaces to zero spaces. This figure includes a 30 percent reduction from the full parking requirement of 114, since the development is located in the PD-2 Parking District. The variance is concurrently under review as VAR2019 0005.

Because the leasing arrangements for the two buildings are not final, the applicant has provided two scenarios for building usage, Option A and Option B. The off-street parking requirement and variance analysis is based on Option B with the highest parking requirement of 80 spaces, versus Option A which is 60 spaces. Parking requirements are listed in CBJ Code 49.40.210.

Pedestrian and Vehicular Circulation

The proposed development has been specifically designed to be pedestrian-friendly, and includes a pedestrian circulation plan (Attachment 10). With just one loading zone and no parking proposed, vehicular circulation is not relevant.

Vegetative Cover and Landscaping

The vegetative cover requirement for the Waterfront Commercial zoning district is 10 percent. With a lot size of 33,875 square feet, the requirement is therefore 3,387 square feet. The applicant has proposed 4,249 square feet of landscaping, for 12.53 percent of the lot, exceeding the requirement. Pages 5-6 of the Project Narrative, Attachment 5, describe the landscaping as a combination of traditional planters and open areas. The landscaping site plan in Attachment 9 provides additional detail. The applicant also proposes hanging baskets, however the baskets are not included in the calculation to meet the landscape requirements. The applicant notes other points of interest under consideration, such as a decorative hardscape representing a river or channel, a sculpture, or a totem. Exact designs have not been developed.

Drainage

A drainage site plan has been included as Attachment 11, in addition to the written description in the Project Narrative (Attachment 5, pp. 6-7). The drainage plan has a combination of features including an oil-water separator, catch basins and trench drains, perforated foundation drains, and awning and roof drains. The drainage plan will be further reviewed by CBJ during the building/grading permit review process.

Lighting

A lighting site plan with fixture types has been included as Attachment 19, in addition to the written description in the Project Narrative (Attachment 5, p. 6). The applicant states that the lighting design will include accent lights and LED display lights to provide interest within the central canopy and roof structure.

04 CBJAC 050.020 establishes performance standards for commercial and industrial uses. Section (b) requires that industrial and exterior lighting not create glare on public highways or neighboring property. Staff recommends the following standard conditions, which were also applied to the adjacent CBJ development:

2. Prior to issuance of a building permit, the applicant shall submit a lighting plan illustrating the location and type of exterior lighting proposed for the development. All exterior lighting fixtures shall be of a “full cutoff” design, and exterior lighting shall

be designed and located to minimize offsite glare. Approval of the plan shall be at the discretion of the Community Development Department, according to the requirements at CBJ 49.40.230(d).

3. Exterior lighting shall not be used in a manner that produces glare on public highways or neighboring property.

Noise

No significant noise is expected from the development except during construction. The construction schedule will comply with the CBJ Noise Ordinance.

Public Health or Safety

The Archipelago property is within an area originally designated as a moderate hazard zone. CBJ Docks and Harbors applied to the Community Development Department (CDD) for removal of the area from the hazard zone, with supporting analysis. The CDD Director approved the amendment to remove the Archipelago property from the hazard zone in 2018, per the attached Notice of Decision (Attachment 6).

In addition, the project area is adjacent to a FEMA-designated Velocity Flood Zone with a base flood elevation of 25 feet in current maps. In addition, flood regulations prohibit habitable structures seaward of the mean high tide line. The project drawings in Attachment 13 demonstrate that the proposed development is outside of the flood zone and landward of mean high tide and therefore complies with all applicable regulations. Staff notes that the FEMA draft flood maps, expected to be adopted in 2020, do not include any changes for this particular coastal area.

In summary, project site has been formally removed from the moderate hazard zone and lies entirely outside the Velocity flood zone. No evidence indicates any public health or safety impacts from the proposed development.

Habitat

The proposed development does not affect any sensitive habitat. The applicant has provided a drainage plan that will address stormwater. The project site is located in the mapped 'Special Waterfront Area' that runs along the downtown tidelands. The project is a permissible use in this area (CBJ 49.70.960(b)). A Special Waterfront Area is an area that is designated for development and considered to have low habitat value.

Property Value or Neighborhood Harmony

The project site is surrounded by a cruise ship dock to the west, the CBJ parking garage and library to the north, Franklin Street and Mixed Use retail to the east, and the recently approved CBJ transportation staging area and restrooms to the south, followed by more retail uses. The proposed development is typical of waterfront developments in the Waterfront Commercial zoning district. No comments were received by the CBJ Assessor's office during the agency review period regarding property value. No evidence suggests that the development will have a significant adverse effect on property value or neighborhood harmony.

AGENCY AND PUBLIC COMMENTS

An agency review period was conducted from October 14 to October 30, 2019. Comments were received from CBJ Streets, the CCFR Fire Marshal, and CBJ Public Works and Engineering, which are included in Attachment 24.

CBJ Streets noted that issues with storm drains and setbacks were addressed during the pre-application conference; that the traffic circulation was backwards in the parking area (staff notes that this applies to the previously approved CBJ development. The proposed Archipelago development does not include any parking); and that LED lighting must be included in the canopy design.

CBJ CCFR noted requirements for fire alarm systems.

CBJ Engineering and Public Works had no concerns and noted that further review would be managed through building permits.

No public comments have been received to date.

CONFORMITY WITH ADOPTED PLANS

2013 Juneau Comprehensive Plan

The 2013 Juneau Comprehensive Plan designates the subject parcel as Marine Commercial, defined as:

> *Land to be used for water-dependent commercial uses such as marinas/boat harbors, marine vessel and equipment sales and repair services, convenience goods and services for commercial and sport fishing, marine recreation and marine tourism activities such as food and beverage services, toilet and bathing facilities, bait and ice shops, small scale fish processing facilities, hotels and motels, and similar goods and services to support mariners and their guests. Float homes, house boats, and live-aboards would be residential uses to be allowed within an MC district.*

The proposed development supports marine tourism amenities that are substantially consistent with this definition.

Chapter Five, Economic Development, includes the following Policies, Development Guidelines, and Implementing Actions related to the proposed development:

> **Policy 5.1** *To develop and sustain a diverse economy, providing opportunities for employment for all residents.*
>
> > **5.1–1A1.** *Work with provide-sector industries and businesses and public sector agencies that are interested in locating or expanding within the City and Borough of Juneau, and consider offering land, tax incentives, or other benefits to encourage new development.*
>
> **Policy 5.5** *To maintain and strengthen downtown Juneau as a safe, dynamic, and pleasant center for government and legislative activities, public gatherings, cultural and entertainment events, and residential and commercial activities in a manner that complements its rich historic character and building forms.*
>
> > **5.5–DG 1.** *When reviewing applications for new downtown Juneau development, consider the visual impacts on downtown building form, urban design and view corridors, as well as impacts on the livability of downtown with regard to circulation, housing accommodations, air quality, noise and hazard abatement and provision of goods and services, to ensure downtown provides a clean, safe, attractive, dynamic, interesting, enjoyable, walkable, culturally diverse and affordable neighborhood within which to live, work and play.*
> >
> > **5.5–DG 2**. *Consider the policies, guidelines and development recommendations of plans like the CBJ Long Range Waterfront Plan, the Willoughby District Plan, and the Capital Transit Plan when reviewing capital improvement programs and development permits for, or applicable to, the downtown Juneau area.*
>
> **Policy 5.6** *To encourage tourism, convention, and other visitor-related activities through the development of appropriate facilities and services, while protecting Juneau's natural, cultural, and economic attractions for local residents and visitors alike, and to participate in the accommodation of the future growth of tourism in a manner that addresses both community and industry concerns.*
>
> **Policy 5.11** *To encourage the location and growth of locally-based basic sector industries that provide year-round, full-time employment and provide tax revenues that support public services.*

> **Policy 5.9** *To facilitate availability of sufficient and suitable water-based facilities and associated land-based acreage to support water-dependent uses, and to work closely with the public and private sectors to facilitate sustainable marine commerce, commercial fishing, seafood processing, recreation, public access to the shoreline, and enjoyment of the waterfront through development of well-designed port facilities.*
>
> > **Development Guideline 5.9–DG 1.** *Assure public access to the shoreline and water when reviewing development applications.*
> >
> > **Development Guideline 5.9–DG 2.** *To the greatest extent practicable, orient new structures and facilities located on the waterfront in such a way as to preserve views of the water from public roadways and vista points.*
> >
> > **Implementing Action 5.9–1A3.** *Assist with coordination of cruise ship traffic and commercial fishing operations to minimize conflicts.*

The proposed development addresses these policies and actions by providing new commercial options for tourists and residents, while preserving water views, public access to the shoreline, and public gathering spaces. In addition, the development complies with the 2004 Long Range Waterfront Plan, and with Downtown Historic District guidelines to the greatest extent practicable.

2004 Long Range Waterfront Development Plan

The Long Range Waterfront Development Plan divides the downtown waterfront from the Douglas Bridge to the Little Rock Dump into specific areas with recommendations for future development. The subject property is within Area D, the Franklin Street Corridor. The Plan identifies two options for development in this area, D1 and D2. Option D1 calls for the creation of pocket parks, a new visitor information center, cultural facilities, and mixed use redevelopment. Option D2 is similar except that it calls for city-owned cruise ship docks to be modified to accommodate larger ships; this option is now complete.

The Project Narrative, Attachment 5 pp. 11-12, includes an explanation of how the development complies with this plan with the proposed mixed-use commercial development. Staff concurs with the applicant's explanation.

2015 Juneau Economic Development Plan

The 2015 Juneau Economic Development Plan has eight initiatives. Initiative Seven is *Revitalize Downtown*, which includes an objective to develop a downtown improvement strategy. The proposed development will provide tourist and community amenities, retail and restaurant options, and will increase property tax revenue. The development substantially complies with this plan.

Downtown Historic District Design Standards and Guidelines

Compliance with the Downtown Historic District Design Standards and Guidelines has been addressed in the Analysis section of this report. The development substantially conforms with Historic District Guidelines where practicable.

FINDINGS

CBJ 49.15.330 (e)(1), Review of Director's Determinations, states that the Planning Commission shall review the Director's report to consider:

1. Whether the application is complete;
2. Whether the proposed use is appropriate according to the Table of Permissible Uses; and,
3. Whether the development as proposed will comply with the other requirements of this chapter.

The Commission shall adopt the Director's determination on the three items above unless it finds, by a preponderance of the evidence, that the Director's determination was in error, and states its reasoning for each finding with particularity.

CBJ 49.15.330 (f), Commission Determinations, states that even if the Commission adopts the Director's determination, it may nonetheless deny or condition the permit if it concludes, based upon its own independent review of the information submitted at the public hearing, that the development will more probably than not:

1. Materially endanger the public health or safety;
2. Substantially decrease the value of or be out of harmony with property in the neighboring area; or,
3. Not be in general conformity with the comprehensive plan, thoroughfare plan, or other officially adopted plans.

Per CBJ 49.15.330 (e) & (f), Review of Director's & Commission's Determinations, the Director makes the following findings on the proposed development:

1. Is the application for the requested conditional use permit complete?

Yes. Staff finds the application contains the information necessary to conduct full review of the proposed operations. The application submittal by the applicant, including the appropriate fees, substantially conforms to the requirements of CBJ Chapter 49.15.

2. Is the proposed use appropriate according to the Table of Permissible Uses?

Yes. The requested permit is appropriate according to the Table of Permissible Uses. The permit is listed at CBJ 49.25.300, Section 2.200 for the Waterfront Commercial zoning district.

3. Will the proposed development comply with the other requirements of this chapter?

Yes. The proposed development complies with the other requirements of this chapter. Public notice of this project was provided in the January 17 and January 24, 2020 issues of the Juneau Empire's "Your Municipality" section, and a Notice of Public Hearing was mailed to all property owners within 500 feet of the subject parcel. Moreover, a Public Notice Sign was posted on the subject parcel, visible from the public Right of Way.

4. Will the proposed development materially endanger the public health or safety?

No. As described in the preceding analysis, the proposed development has been formally removed from the moderate hazard zone and lies outside of the velocity flood zone and is landward of the mean high tide line, in conformance with all requirements. No evidence indicates that the proposed development will materially endanger public health or safety.

5. Will the proposed development substantially decrease the value of or be out of harmony with property in the neighboring area?

No. Based on the preceding analysis, the proposed development is comparable to other waterfront developments in the neighboring area which provide a variety of retail services to visitors and the general public. No evidence indicates that the development will decrease the value of, or be out of harmony with, property in the neighboring area.

6. Will the proposed development be in general conformity with the land use plan, thoroughfare plan, or other officially adopted plans?

Yes. Based on the preceding analysis, the proposed development is in general conformity with the 2013 Juneau Comprehensive Plan, the 2004 Long Range Waterfront Development Plan, the 2015 Juneau Economic Development Plan, and the Downtown Historic District Design Standards and Guidelines.

Per CBJ 49.70.900 (b)(3), General Provisions, the Director makes the following Juneau Coastal Management Program consistency determination:

7. Will the proposed development comply with the Juneau Coastal Management Program?

Yes. The proposed development does not affect any sensitive habitat. The project site is located in the mapped 'Special Waterfront Area' that runs along the downtown tidelands. The project is a permissible use in this area (CBJ 49.70.960(b)). A Special Waterfront Area is an area

that is designated for development and considered to have low habitat value.

RECOMMENDATION

Staff recommends that the Planning Commission adopt the Director's analysis and findings and grant the requested Conditional Use Permit for two (2) two-story commercial mixed use buildings. The approval is subject to the following conditions:

1. The development shall utilize horizontal siding on the first floor of both buildings.

2. Prior to issuance of a building permit, the applicant shall submit a lighting plan illustrating the location and type of exterior lighting proposed for the development. All exterior lighting fixtures shall be of a "full cutoff" design, and exterior lighting shall be designed and located to minimize offsite glare. Approval of the plan shall be at the discretion of the Community Development Department, according to the requirements at CBJ 49.40.230(d).

3. Exterior lighting shall not be used in a manner that produces glare on public highways or neighboring property.

Community Development
(907) 586-0715
PC_Comments@juneau.org
www.juneau.org/plancomm
155 S. Seward Street • Juneau, AK 99801

BOARD OF ADJUSTMENT
NOTICE OF DECISION

Date: February 6, 2020
File No.: VAR2019 0005

Tiland/Schmidt Architects, P.C.
3611 Southwest Hood Avenue, Suite 200
Portland, OR 97239

Proposal:	A Variance to reduce the parking requirement to zero in association with USE2019 0021, a proposed two (2) two-story commercial mixed-use development
Property Address:	365 S. Franklin St.
Legal Description:	Lot 1A Archipelago
Parcel Code No.:	1C070K830022
Hearing Date:	January 28, 2020 and February 4, 2020

The Board of Adjustment, at its regular public meeting, adopted the analysis and findings listed in the attached memorandum dated January 22, 2020, and denied the non-administrative variance to reduce the off-street parking requirement to zero in association with USE2019 0021, a proposed two (2) two-story commercial mixed-use development. The Board of Adjustment amended Finding 2C as follows:

c. The grant of the variance is not detrimental to public health, safety, or welfare…

No. Based on the preceding analysis, a grant of the variance for a zero parking requirement may be detrimental to the public health, safety, or welfare by pushing employees or customers of the development to park in surrounding neighborhoods.

Attachment: January 22, 2020 memorandum from Teri Camery, Community Development, to the CBJ

Board of Adjustment regarding VAR2019 0005.

This Notice of Decision does not authorize construction activity. Prior to starting any development project, it is the applicant's responsibility to obtain the required building permits.

This Notice of Decision constitutes a final decision of the CBJ Board of Adjustment. Appeals must be brought to the CBJ Assembly in accordance with CBJ 01.50.030. Appeals must be filed by 4:30 p.m. on the day twenty days from the date the decision is filed with the City Clerk, pursuant to CBJ 01.50.030 (c). Any action by the applicant in reliance on the decision of the Board of Adjustment shall be at the risk that the decision may be reversed on appeal (CBJ 49.20.120).

Project Planner: _____
Teri Camery, Senior Planner
Community Development Department

_____
Michael LeVine, Chair
Planning Commission

_____
Filed With Municipal Clerk

2/11/2020
Date

cc: Plan Review

NOTE: The Americans with Disabilities Act (ADA) is a federal civil rights law that may affect this development project. ADA regulations have access requirements above and beyond CBJ-adopted regulations. Owners and designers are responsible for compliance with ADA. Contact an ADA-trained architect or other ADA trained personnel with questions about the ADA: Department of Justice (202) 272-5434, or fax (202) 272-5447, NW Disability Business Technical Center (800) 949-4232, or fax (360) 438-3208.

CITY AND BOROUGH OF JUNEAU
ALASKA'S CAPITAL CITY
COMMUNITY DEVELOPMENT

(907) 586-0715
CDD_Admin@juneau.org
www.juneau.org/CDD
155 S. Seward Street • Juneau, AK 99801

DATE: January 22, 2020

TO: Board of Adjustment

FROM: Teri Camery, Senior Planner
Community Development Department

FILE NO.: VAR2019 0005

PROPOSAL: A non-administrative variance to reduce the off-street parking requirement to zero in association with USE2019 0021, a proposed two (2) two-story commercial mixed-use development

GENERAL INFORMATION

Applicant:	Tiland/Schmidt Architects, P.C.
Property Owner:	Archipelago Properties, LLC
Property Address:	365 S. Franklin Street
Legal Description:	Lot 1A Archipelago
Parcel Code Number:	1C070K830022
Site Size:	33,875 square feet
Comprehensive Plan Land Use Designation:	Marine Commercial
Zoning:	Waterfront Commercial
Utilities:	City water and sewer
Access:	South Franklin Street
Existing Land Use:	Vacant

Surrounding Land Uses:

North - Library and Parking Garage; Waterfront Commercial
South - Retail; Waterfront Commercial
East - South Franklin Street; Mixed Use
West - Cruise ship dock; Waterfront Commercial

Vicinity Map

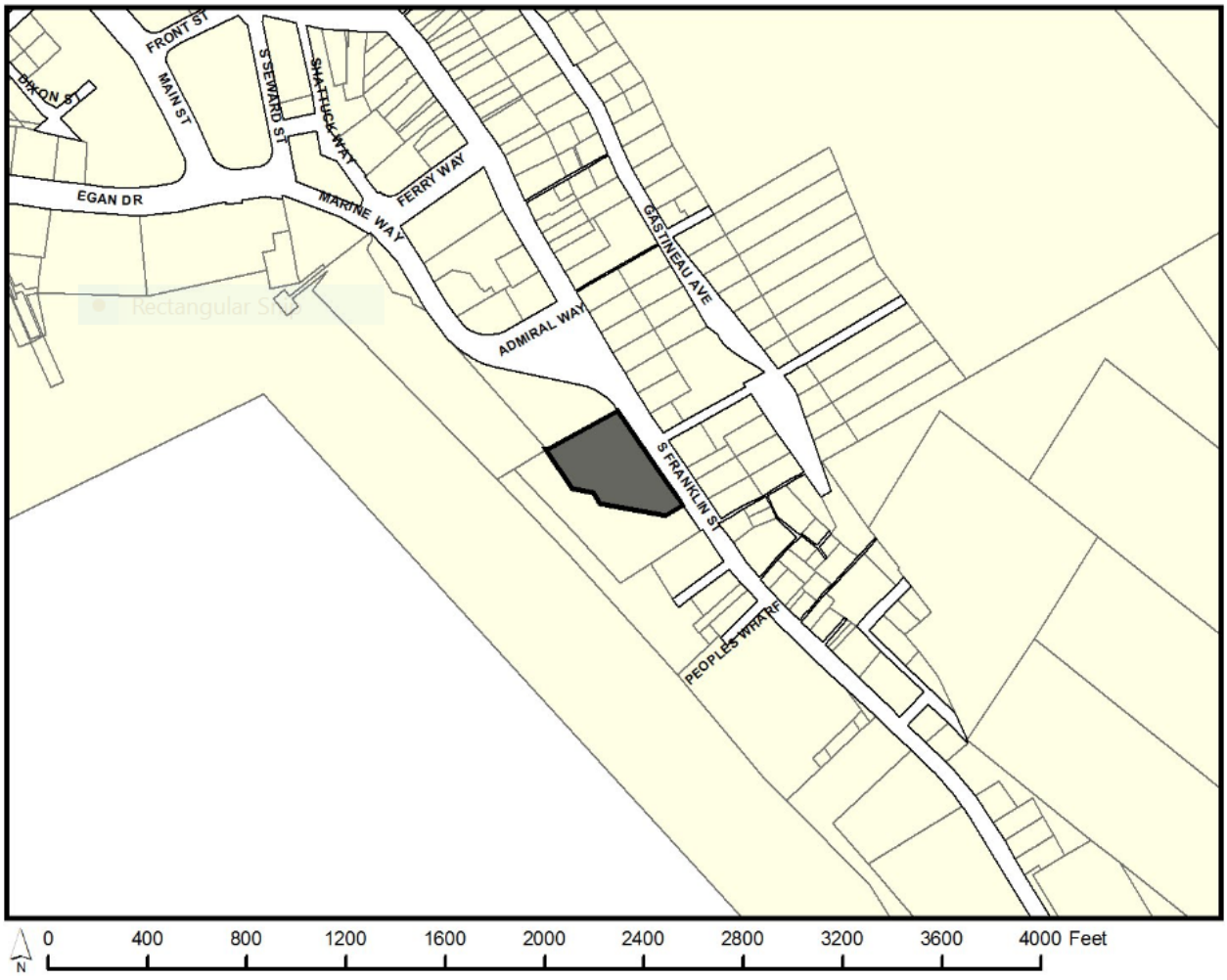

ATTACHMENTS

Attachment 1 Development Permit Application
Attachment 2 Variance Application
Attachment 3 Variance Project Narrative
Attachment 4 Site plan

Attachment 5 PD-1 and PD-2 Parking District Map
Attachment 6 Fee in-lieu of Parking District Map
Attachment 7 Subdivision plat 2019-19
Attachment 8 Flood Zone map
Attachment 9 Hazard Map Amendment Notice of Decision
Attachment 10 Public Comment

PROJECT DESCRIPTION

The applicant requests a variance to reduce the parking requirement from 80 spaces to zero spaces for a proposed two (2) two-story commercial mixed-used buildings on the downtown waterfront. This development is concurrently under review as USE2019 0021.

Because the leasing arrangements for the two buildings are not final, the applicant has provided two scenarios for building usage, Option A and Option B. The parking requirement and variance analysis is based on Option B with the highest parking requirement of 80 spaces, versus Option A which is 60 spaces. Parking requirements are listed in CBJ Code 49.40.210.

Per CBJ 49.40.210(a), the parking requirement of 80 off-street parking spaces, Option B, is based on the following calculation:

- Building A. 7,775 square feet retail (1 space/300 square feet); 7,534 square feet restaurant (1 space/200 square feet)
- Building B. 7,694 square feet retail; 7,669 square feet office (1 space/300 square feet)
- Subtotal: 114 off-street parking spaces
- Final Total: 80 off-street parking spaces, which includes a 30 percent reduction because the property is located in the PD-2 parking district (Attachment 5)

Option A with a parking requirement of 60 off-street parking spaces, which is not evaluated in this application but included for reference, is based on the following calculation:

- Building A. 7,775 square feet retail (1 space/300 square feet); 7,534 square feet storage (1 space/100 square feet)
- Building B. 7,694 square feet retail; 7,669 square feet office (1 space/300 square feet)
- Subtotal: 84 off-street parking spaces
- Final Total: 60 off-street parking spaces, which includes 30 percent reduction because the property is located in the PD-2 parking district (Attachment 5)

The applicant has also included the parking numbers for the PD-1 parking district, which allows a 60 percent parking reduction. Those numbers are 46 spaces for Option B and 34 spaces for Option A.

The parking plan must include a minimum of one loading space, and four accessible spaces as

required per CBJ 49.40.210(b) and (c). The Project Narrative and site plan includes one loading space on the southeast side of the development, and no accessible parking spaces as shown in Attachment 4.

BACKGROUND

The proposed development is concurrently under review as USE2019 0021. The USE staff report includes additional history regarding public meetings on the development and the adjacent CBJ transportation staging area and public restrooms. The CBJ facility was approved as USE201800015/CSP20180010 on November 15, 2018. The full background information is not repeated here because it is not relevant to the parking variance analysis.

ANALYSIS

In the Project Narrative, Attachment 3, the applicant has provided a number of reasons to justify the variance, including financial hardship, parking variances issued to neighboring properties, and conformance with Historic District Standards. These arguments are reviewed below, followed by a discussion of the hardship language in the Variance Criteria [CBJ 49.20.250(b)].

Neighboring Properties

The applicant has provided information on four properties in the PD-2 parking district considered to be similar to the Archipelago property, noting that in each case a variance was granted to reduce the parking requirement to the PD-1 standard. The PD-2 district allows a 30 percent parking reduction while PD-1 offers a 60 percent reduction. If the Archipelago development was granted a similar reduction to the PD-2 standard, the parking requirement would be 46 off-street parking spaces instead of 80. To be clear, this is the number based on Option A with the highest parking requirement, since final lease arrangements are unknown at this time.

The applicant has also explained that, while some customers and employees may arrive by bus, taxi, or ride-share, most of the customers and employees associated with retail establishments in this vicinity arrive by foot; these arguments have been used as justification for variances in the past. The applicant argues that the Archipelago Center's nearest competitors will be similar retail businesses that did not have to provide parking when they were built.

Staff notes that these variances were granted before the variance criteria were substantially revised in the CBJ Land Use Code in 2018. The existing non-administrative variance ordinance states that the property must have unusual or special conditions existing on the property, and that these conditions may not be created nor caused by the person seeking the variance. Furthermore, the variance goes with the land, not the use.

Because the criteria have changed, staff has not researched these cases in entirety. It appears that in the variances granted throughout the mid-1990s to the early 2000s that staff reviewed, the applicants were frequently granted approval to reduce the parking requirement from the PD-2 standard to the PD-1 standard. (Records do not indicate variances of this type in recent years.) The Board of Adjustment's decisions gave consideration of the following alternatives or mitigation to off-street parking requirements including:

- Extend the distance that off-street parking could be created to a distance greater than 500 feet (500 feet is the current distance permitted);
- Share loading spaces with adjacent property;
- Provide shuttle service for employees;
- Provide on-site covered and secured bicycle storage;
- Require early morning deliveries; and
- If in the future a fee-in-lieu option became available, CBJ was authorized in at least one variance to have the applicant participate in the program (VAR2006-00031 approved September 27, 2006). Staff notes that the Downtown Fee-in-Lieu of Parking District Map was adopted October 30, 2006.

The applicant states that requiring 46 off-street spaces under the PD-1 standard is also impractical, and would negatively impact the character of the Historic District and its pedestrian orientation. The Historic District extends into the first 40 feet of the property from the sidewalk. Historic District Standards and Guidelines (04 CBJAC 080) will be addressed in a later section.

Financial Hardship

Fee-in-lieu of parking is an option in both the PD-1 and PD-2 Parking Districts. The current fee-in-lieu rate is $10,805 for a commercial parking space. The established parking requirement of 80 spaces could therefore be addressed with an $864,400 fee-in-lieu payment. At the PD-1 adjustment to 46 off-street spaces, this figure would be $497,030.

The applicant states that this option is "onerous and discriminatory." The applicant, however, has not reviewed options for reducing the size of the buildings, or reconfiguring the shape of the buildings, to allow for any number of off-street parking spaces. Such options could allow some level of accommodation for the parking requirement. For example, if the applicant accommodated 10 off-street parking spaces on site, the fee-in-lieu payment would be reduced to $756,350, or $388,980 if the PD-1 adjustment was used. The applicant has not offered any site plan adjustments to address parking requirements or to reduce fee-in-lieu payments. The Variance criteria interpretation of hardship will be addressed in the final section of the analysis.

Other Options Considered

The applicant describes other options in the Project Narrative. CBJ Code allows parking

requirements to be met on off-site locations within 500 feet of the site. According to the applicant, no off-site locations are available for the Archipelago development. The applicant also notes that shuttle services to other off-site locations have been previously approved. The applicant questions whether those shuttle services are currently operating. Again, staff has not researched those developments because the information is not relevant to the current Variance criteria. As previously noted, the applicant has not reviewed options for reducing the size of the buildings, or reconfiguring the site layout, to allow any off-street parking spaces. The Variance request is for zero off-street parking spaces, except for the loading zone.

The applicant has also argued that, because the property does not directly abut the shoreline (a section of CBJ property follows the western edge along the waterfront), the site is improperly zoned Waterfront Commercial, should be part of the MU (Mixed Use) zoning district instead, and therefore should be regulated differently. The applicant states that the special condition of the property is the Waterfront Commercial zoning in the Mixed Use environment.

Pre-application notes from the Conditional Use Permit show that the applicant considered applying for a re-zone of the property to address this concern, but did not complete the rezone application in either the July or January application periods. The parking requirements for Mixed Use and Waterfront Commercial, however, are the same; CBJ Code 49.40.210 does not distinguish between zoning districts, only use.

Downtown Historic District Standards and Guidelines

The applicant cites the expectation to comply with Downtown Historic District Standards and Guidelines as an impediment to compliance with parking standards, and specifically states that the parking requirement is inconsistent with Historic District standards. Historic District standards, however, do not include parking requirements, only recommendations and guidelines regarding placement and screening. These recommendations are noted in Chapter 7, Design Guidelines for New Construction. The guidelines recommend that development should "*maintain the alignment of buildings at the sidewalk edge and that street facades should span lot widths.*" Chapter 9, Design Guidelines for Parking Facilities, further states that "surface parking should be located in the interior of a block whenever possible" and recommends a visual buffer where surface lots abut sidewalks. Again, these are guidelines and do not supersede the specific requirements of the CBJ Land Use Code.

The site plan and the applicant's Conditional Use Permit Project Narrative demonstrate that the applicant has followed these setback guidelines only when possible, as shown with the zero foot front setback for Building B. The front setback for Building A, as well as the side yard setbacks and rear-yard setback, all follow the Waterfront Commercial setback requirements of 10 feet.

The Downtown Historic District Standards and Guidelines are not unique to the subject property. Historic District standards are recommendations and not requirements. Finally, the applicant has

not followed these standards except for the Building B zero-foot front setback.

Hazard Designations

The flood zone map in Attachment 8 indicates that the property is adjacent to a Velocity flood zone, but not located within one. A small portion of the development is located seaward of the mean high water line. FEMA and CBJ regulations (CBJ 49.70.400) prohibit habitable development seaward of the mean high water line, using the FEMA definition of development. This restriction prohibits development on a small area of the property estimated by the applicant to be 759 square feet. Furthermore, most, if not all, of this area lies within the 10-foot rear yard setback where structures are already prohibited. While a full survey of the mean high water line is not available for all downtown properties, it is reasonable to assume that the mean high water line extends at least partially into most waterfront (and waterfront adjacent) properties in some amount. This restriction is therefore not unusual, and in this particular situation affects only a small portion of the property.

In addition, the property was originally located within a Moderate Hazard Zone. Development in Moderate Hazard zones come with additional development restrictions, due to the risk to life and safety from landslides and avalanches. This designation, however, was eliminated through the Hazard Map amendment process (case AME2018 0010 with a Notice of Decision issued on August 14, 2018, Attachment 9.)

Non-Administrative Variance Criteria on Hardship [CBJ 49.20.250(b)]

A Variance is an allowance to violate a law. A Variance excuses a landowner from having to comply with zoning regulations that other landowners in the same zoning district must abide by. The Variance criteria emphasize that the deviation from code requirements must be based on undue hardship resulting from **unusual or special conditions of the property**, and the unusual conditions must not be created by the property owner.

A hardship exists when it is unusually difficult for a landowner to comply with regulations because of the peculiarity of the property. In order to justify granting a variance, an undue hardship must first be found to exist, and secondly the variance must be narrowly tailored to relieve that hardship and nothing more.

The proposed development is located on a flat lot of 33,875 square feet within the Waterfront Commercial zoning district. The development meets the lot width and lot depth requirements for the district, and greatly exceeds the minimum lot size of 2,000 square feet. The lot was created in 2019 as shown in Attachment 7. As described previously, the lot is not within any hazard zones and has no remarkable features.

Financial hardship is not considered an undue hardship in this case because it is not tied to

unusual or special conditions of the property. The variance is focused on the land and its physical features because a variance runs with the land.

In addition, no evidence indicates that the applicant has tailored the variance to relieve the stated financial hardship. The applicant has not adjusted the building size or configuration to provide any parking on-site, nor has the applicant offered any fee-in-lieu payment to cover any number of parking spaces. This presumes that the fee-in-lieu option of paying for one parking space at $10,805 is considered a financial hardship, as well as the fee of $864,400 to compensate for all spaces, or $497,030 spaces at the PD-1 parking reduction of 60 percent.

Variance Criteria on Public Health, Safety, and Welfare

The variance criteria require a determination of whether the Variance will be detrimental to the public health, safety, and welfare.

The PD-2 Parking District, with its 30 percent reduction in the off-street parking requirement, is an acknowledgment that developments in these areas are served by employees who are likely to live downtown, and used by customers who primarily arrive by cruise ships. The adjacent PD-1 Parking District, with a 60 percent reduction in the off-street parking requirement, follows this same rationale to a greater degree.

The applicant has made the argument, without supporting evidence, that its employees and customers arrive by foot or by transit. This argument for a reduction in the parking requirement, however, has already been addressed in the PD-2 Parking District requirements.

Fee-in-lieu of parking payments, currently at $10,805 per commercial space, support parking infrastructure and transit improvements to both provide for more parking and to reduce the demand for it. The applicant has not offered a fee-in-lieu payment of any amount to offset potential impacts.

Parking lots on the waterfront may have detrimental aesthetic effects without adequate visual screening. Parking lots also discourage alternative transit methods for customers and employees and may add to congestion. At the same time, many residents and businesses perceive downtown Juneau to have a significant parking problem. Downtown residents complain of summer tourist employees parking in their neighborhoods, while businesses complain of inadequate parking for their stores. The 2013 Juneau Comprehensive Plan contains both policies that promote additional off-street parking as well as policies that promote pedestrian movement and discourage parking expansion.

The proposed variance to zero parking is likely to have some detrimental impact in neighborhoods by pushing employees and customers to park in surrounding areas. The applicant states that variances granted (under the previous ordinance) justified the reduction from the PD-

2 standard to the PD-1 standard by allowing the applicants to shuttle employees, or by assuming that customers would be pedestrians. Such mitigation has proven difficult to enforce, and CBJ cannot mandate that customers and employees arrive by foot. A lesser variance, which reduces the parking standard but does not eliminate the requirement (for example, PD-2 to PD-1), combined with fee-in-lieu payment may offset this impact. As proposed with zero parking, the variance may be detrimental to public welfare and may negatively impact surrounding properties.

AGENCY AND PUBLIC COMMENT

No agency comments were received on the Variance during the agency review period conducted from October 14 to October 30, 2019.

One public comment has been recent to date, from a resident opposed to the variance (Attachment 10). The resident states this his family and friends avoid downtown during the tourist season because of the lack of street parking.

VARIANCE REQUIREMENTS

Pursuant to CBJ 49.20.200, a variance may be granted to provide an applicant relief from the requirements of this title. A variance is prohibited from varying any requirement or regulation of this title concerning the use of land or structures, housing density, lot area, requirements in chapter 49.35, or requirements in chapter 49.65.

A non-administrative variance may be granted to provide an applicant relief from requirements of this title after the prescribed hearing and after the Board of Adjustment has determined that:

1. Enforcement of the ordinance would create an undue hardship resulting from the unusual or special conditions of the property;
2. The unusual or special conditions of the property are not caused by the person seeking the variance;
3. The grant of the variance is not detrimental to public health, safety, or welfare; and
4. The grant of the variance is narrowly tailored to relieve the hardship.

Pursuant to CBJ 49.20.260, the board may attach to a variance conditions regarding the location, character, and other features of the proposed structures or uses as it finds necessary to carry out the intent of this title and to protect the public interest.

FINDINGS

1. Is the application for the requested variance complete?

Yes. Staff finds the application contains the information necessary to conduct full review of the proposed operations. The application submittal by the applicant, including the appropriate fees, substantially conforms to the requirements of CBJ Chapter 49.15.

Criterion 1 is met.

2. Does the variance as requested, meet the criteria of Section 49.20.250, Grounds for Variances?

a. Enforcement of the ordinance would create an undue hardship resulting from the unusual or special conditions of the property;

No. Based on the preceding analysis, no evidence indicates that enforcement of the ordinance would create an undue hardship resulting from the unusual or special conditions of the property. The property is a flat waterfront lot that meets and exceeds minimum dimensional standards for the Waterfront Commercial zoning district. There are no unusual or special conditions on the property, therefore there are no undue hardships resulting from these conditions.

Criterion 2A is not met.

b. The unusual or special conditions of the property are not caused by the person seeking the variance;

No. As noted previously, there are no unusual or special conditions on the property. Further, the property is located in the PD-2 Parking District and Fee-in-Lieu Parking District, which offer relaxation of the off-street parking requirements.

Criterion 2B is not met.

c. The grant of the variance is not detrimental to public health, safety, or welfare; and

No. Based on the preceding analysis, a grant of the variance for a zero parking requirement, combined with no fee-in-lieu requirement or other type of parking mitigation, may be detrimental to the public health, safety, or welfare by pushing employees or customers of the

development to park in surrounding neighborhoods.

Criterion 2C is not met.

d. The grant of the variance is narrowly tailored to relieve the hardship.

No. There is no hardship resulting from usual or special conditions on the property. Furthermore, as described in the preceding analysis, the proposed variance is a request to reduce the parking requirement to zero and is therefore not narrowly tailored to relieve any hardship.

Criterion 2D is not met.

RECOMMENDATION

Staff recommends that the Board of Adjustment adopt the Director's analysis and findings and deny the requested variance, VAR2019 0005. If the Board elects to amend the findings and approve the requested variance, the variance would allow a reduction of the off-street parking requirement to zero in association with USE2019 0021, a proposed two (2) two-story commercial mixed-use development

City & Borough of Juneau
Alaska's Capital City

BUILDING PERMIT

Permit No.
BLD20190145

* NOTE: "Building Permit" is a generic term which includes Building Safety Inspection, Grading Permits, and permits for Electrical, Plumbing and Mechanical work.

Your special attention is called to the following:

This permit is granted on the express conditions that the construction shall, in all respects, conform to the ordinances of the City and Borough of Juneau. It may be revoked at any time upon violation of any of said ordinances.

The granting of this permit does not authorize the violation of any federal, state or local law regulating construction for the violation of the terms of any deed or covenent or any zoning or other regulation.

If plan review was required, this permit must be attached to the approved drawings. The permit, plans and record of inspections must be available on site at all times while the construction is in progress and before final inspection.

The yellow posting notice must be prominently displayed to show a permit has been issued and to assist the inspectors in location of the project. This permit becomes null and void if work or construction authorized is not commenced within one year or if work or construction is suspended or abandoned for a period of one year at any time after work has commenced.

Note: City Ordinances REQUIRE a Final Inspection be approved for every Building Permit.

Inspections

Inspections can be arranged by telephoning **586-1703** or by written or faxed notification.
The Online Building Inspection Request Form is at: **www.juneau.org/permits/inspect_request.php.**
Work shall not proceed until the inspector has approved the various stages of construction. An approved Final Inspection is required.
Call before 7:00 AM for same day inspections.
Please provide the following information: 1 Permit Number, 2 Address, 3 Type of Inspection, 4 Date and Time and 5 Contact Name and Phone Number.

Job Address: **356 S FRANKLIN ST**
Permit Number: **BLD20190145**
Project Description: Grading permit

Issued Date : **04/12/2019**
Parcel No: **1C070K830036**

Parcel Information : ARCHIPELAGO LT 1

Setbacks: Zone: WC:
Front: 10.00 Ft. NE
Rear: 10.00 Ft. SW
Street Side: 10.00 Ft.
Side 1: 10.00 Ft. NW
Side 2: 10.00 Ft. SE

Comments:

Owner : ARCHIPELAGO PROPERTIES LLC
ATTN TAX DEPT
725 BROAD ST
AUGUSTA GA 30901

Applicant : TRUCANO CONSTRUCTION
3560 N DOUGLAS HWY
JUNEAU AK 99801

Fee Type	Date	Receipt	Amount Paid
BLD- Grading Plan Review	04/04/2019	56285	$54.00
BLD- Grading Permit Fee	04/04/2019	56285	$68.50
		Total Fees Paid:	$122.50

Valuation for Permit Fee Calculations:

S.F.	Type	Rate	Amount
		Total Valuation:	$0.00

Project Conditions and Holds:

Special Condition - All utilities within the private property shall be located by the land owner and or the private contractor, and shall be the responsibilty of the land owner.

Custom - NO fill is permitted within the VE flood zone.

Inspections Required: Call for inspection before covering or concealing any of the work described below. Inspections may be combined.
E-Grading/Drainage
E-General Engineering Final

JUNEAU PERMIT CENTER - 230 S. Franklin Street - 4th Floor, Marine View Center - Mail: 155 S. Seward Street, Juneau, AK 99801
Phone: 586-0770 - FAX: 586-3365 - Inspection Requests: 586-1703 - Email: permits@ci.juneau.ak.us
Web Site: www.juneau.org/permits

Staff Review Sheet

Permit Intake Initials: AS

FIRE ZONE ENG WAT SEW ARCH STRUC PLUM MECH ELEC ACCESS SPECINSP

Planner: LB

4/4/2019

Case No: **BLD20190145**

Site Address: 356 S FRANKLIN ST

Parcel No: 1C070K830036

Desc: Grading permit

Commercial GRD

FCC Code: ?

Type of Construction: ____

Sprinkler Substitute for Type A Construction: YES NO

Sprinkler System: FULL PARTIAL NONE Required: YES NO

Alarm System: FULL PARTIAL NONE Required: YES NO

Code Edition: _____ Code Review by: _____ Date: _____

New Dwelling Units: 0

Existing Dwelling Units: 0

Occupancy Class: _____

Valuation for Permit Fee Calculations:

S.F.	Type	Rate	Amount

Total Valuation: $0.00

LAND USE

ZONE/UNITS: WC /

WETLAND: _____

FLOOD ELEV: 25.00

FIRM ZONE: VE Bjm/s 07/08

FIRM MAP: _____

LOT SIZE: 43,508 SF / 1.0 ACRES

SETBACKS

Front: 10 NE

Rear: 10 SW

Side: 10 NW/SE

Other: _____

PARKING: _____

ANADROMOUS: _____

EAGLES NEST: _____

Coverage: _____ Permissible/Conditional

HEIGHT: _____ Permissible/Accessory

VEGETATION: _____

HAZARD: _____

ENGINEERING/PUB WORKS

Dwelling Units: _____

CITY WATER:

Permit #: _____

Use: _____

Assessment: _____

Service Size: _____

Line Size: _____

Meter Size: _____

CITY SEWER:

Permit #: _____

Use: _____

Assessment: _____

Fixture Units: _____

LAND USE PERMITS

ADR Case #: _____

PLAN REVIEW APPROVALS

	Initials	Date
__ Fire		
__ Zoning	LEB	4/12/19
__ Engineering	MHAT	4/8/19
__ Water		
__ Sewer		
__ Architectural		
__ Structural		
__ Plumbing		
__ Mechanical		
__ Electrical		
__ Access		
__ Spcl Insp Form		

APPROVED FOR ISSUANCE

Signature

4/12/19

Date

PERMIT ISSUANCE FEES

__ Grading Plan Review Fee $_____

__ Adjusted Plan Review Fee $_____

__ Fast Track Fee $_____

__ Early Start Fee $_____

__ Building Permit Fee $_____

__ Water Assessment Fee $_____

__ Sewer Assessment Fee $_____

__ Sewer Inspection Fee $_____

__ Grading Permit Fee $_____

__ Driveway Permit Fee $_____

__ Bond for _____ $_____

__ Other _____ $_____

Total Issuance Fees $_____

PERMIT ISSUANCE PAYMENTS

Date	Receipt	Check	Amount
			$
			$
			$

Parcel Tags:

5/2/16 TJF - VAR2011-0004 allows 0ft setback on NW property line for food carts.

CONDITIONS AND HOLDS ON PERMIT: (Continued on back of sheet)

NO fill is permitted within the VE floodzone.

BUILDING PERMIT APPLICATION (Continued)

TYPES OF INSPECTIONS

The Work Codes below contain standard inspections for the permit type. Circle additional inspections if required.

Work Codes -
B-Building Safety Inspection
B-Commercial Addition
B-Demolition
B-Grading
B-Manufactured Home Placement
B-Oil/Gas Piping
B-Porches/Decks/Carports
B-Reroof
B-Residential Electrical Service
B-Single Family Dwelling
E-ROW- Water & Sewer Service
E-ROW- Water Main
E-ROW-Driveway
E-ROW-Fire Line
E-ROW-Sewer Main
E-ROW-Sewer Main & Service
E-ROW-Sewer Service
E-ROW-Water Main & Service
E-ROW-Water Main & Sewer Main
E-ROW-Water Service
E-UTL- Sewer Main
E-UTL-Fire Line
E-UTL-Fire Line & Water Line
E-UTL-Fire Line & Water Main
E-UTL-OWTDS
E-UTL-Sewer Line
E-UTL-Pressure Sewer Line
E-UTL-Sewer Line w/ Decomm
E-UTL-Pressure Sewer Line w/Decom
E-UTL-Water Line
E-UTL-Water Main

Building-
B-Appliance/Chimney
B-Bonding
B-Building Final
B-Building Service
B-Combustion Air
B-Commercial Hoods
B-Conduit & Raceway Systems
B-Cross Connection Control
B-Demo Electric Safed Off
B-Demo Excavation Filled
B-Demo Sewer/Water Capped
B-Demolition Final
B-Devices and Equipment
B-Electrical Final
B-Fire Dampers/Sprinklers
B-Fire Separation/Rated Assemb
B-Foundation, Forms & Reinf Steel
B-Framing
B-Grounding
B-Heat Piping
B-Insulation/Vapor Barrier
B-Masonry
B-Mechanical Final
B-Meter Yoke
B-Meter Yoke with Meter
B-MH Foundation
B-MH Utilities
B-Mobile Home Final
B-Plumbing Final
B-Oil & Gas Piping/Tanks
B-Rough Electrical
B-Rough Plumbing
B-Service/Panel
B-Setback Verification
B-Smoke/Carbon Monoxide Detec
B-Special Inspection
B-Specialty Piping
B-Temporary Power
B-Under Slab Utilities
B-Ventilation/Plenums & Ducts
B-Vents (Bath, Dryer, Kitchen, etc.)
B-Yellow Tag Electrical
B-Zoning Final

Enforcement -
ENF - Enforcement Status Check

Miscellaneous -
M-Site Visit

Fire -
F-Address and Required Signage
F-Alarm Panel/Transmitter
F-Alarm Zones
F-Blasting on Individual Lot
F-Childcare/Daycare Inspection
F-Commercial Dev Land Clearing
F-Courtesy Inspection
F-Emergency Lighting Test
F-Events in Mall Hallways
F-Explosives Shipment-Unest Loc
F-FDC Location
F-Fire Extinguishers
F-Fire Final
F-Fire Hydrant Placement
F-Fire Related Inspection
F-Fixed Welding Inspection
F-Flammable/Combustible Material
F-Hazardous Material Storage
F-Kitchen Hood Suppression Test
F-Liquor License Renewal
F-Open Burning Inspection
F-Paint Booth Inspection
F-Proper Sprinkler System Bracing
F-Roof/Tar Kettle Inspection
F-Special Event Structure
F-Sprinkler Head Placement
F-Sprinkler Hydrostatic Test
F-Subdivision Land Clearing
F-Subdivision/Road Blasting
F-System Acceptance Test
F-Temporary Welding Inspection
F-Underground Fire Line Flush

Engineering -
E-Access to Curb Stop Valve
E-ADEC on-site Sewer Final
E-ADEC on-site Water Main Final
E-Asbuilt Survey Required
E-Bacteriological Test
E-Bedding / Backfill
E-Billing Authorization
E-Blasting Verification
E-Bore Flush
E-CBJ Waste Water Department
E-CBJ Water Department
E-Chlorination Test
E-Cleanouts
E-Continuity
E-Cross Connection Control
E-Culvert
E-Curb Box
E-Curb Cut Final
E-Curb Cut Reinforcement
E-Curb Stop
E-Depth
E-Electrical Utility
E-Final
E-Fire Hydrants
E-Fire Line Final
E-General Engineering Final
E-Grade
E-Grading/Drainage
E-Headwalls
E-Installation of Access & Ports
E-Installation of Insulation
E-Location
E-Manhole Tap
E-Manholes - Sewer Main
E-Material
E-OWTDS Inspection
E-Pressure Test
E-Pump Ticket
E-Residual / Free Chlorine
E-Retaining Walls
E-ROW - Final
E-ROW Restoration
E-Septic Decommission
E-Sewer Connection
E-Sewer Disconnect
E-Sewer Final
E-Sewer Main Final
E-Sewer Service Tap
E-Sewer System
E-Sidewalk Final
E-Sidewalk Reinforcement
E-Size
E-Soil
E-State D.O.T. Approval
E-Storm Drains
E-Street Patch
E-Streets
E-Telephone Utility
E-Thaw Waiver
E-Thaw Wire
E-Thrust Blocks
E-Turn Water OFF
E-Turn Water ON
E-TV Cable
E-Utility Ribbon
E-Utility Trench
E-Water Final
E-Water Meter Required
E-Water Meter/Yoke
E-Water Service Tap
E-Water System
E-Water Tap
E-Width

ADDITIONAL CONDITIONS AND HOLDS (STAFF)

City & Borough of Juneau
Alaska's Capital City

Application Date: **April 4, 2019**

BUILDING PERMIT APPLICATION

NOTE: THIS IS NOT A BUILDING PERMIT

* NOTE: "Building Permit" is a generic term which includes Building Safety Inspections, Grading Permits, and permits for Electrical, Plumbing and Mechanical work.

Case No: **BLD20190145**

Case Description: Grading permit

Site Address: **356 S FRANKLIN ST**

Parcel No: 1C070K830036

Legal Description: ARCHIPELAGO LT 1

Check No. of Existing Dwelling Units:

No. of New Dwelling Units: 0

No. of Removed Dwelling Units: 0

Applicant : TRUCANO CONSTRUCTION
3560 N DOUGLAS HWY
JUNEAU AK 99801

e-mail: trucano@alaska.com

PH1 586-2444
CEL 321-2680

Owner: ARCHIPELAGO PROPERTIES LLC
ATTN TAX DEPT
725 BROAD ST
AUGUSTA GA 30901

PH: _____ FAX _____

Contractor: TRUCANO CONSTRUCTION
3560 N DOUGLAS HWY
JUNEAU AK 99801

Valuation for Permit Fee Calculations:

S.F.	Type	Rate	Amount
	Total Valuation:		$0.00

Associated Cases:

None.

Parcel Tags:

5/2/16 TJF - VAR2011-0004 allows 0ft setback on NW property line for food carts.

Notes and Conditions:

Jeff S. — 4-4-19 — AS

Applicant's Signature (Owner, Contractor or Authorized Agent) — **Date** — Staff Acceptance

I hereby certify that I have read and examined this application and know the same to be true and correct. I further certify that all provisions of laws and ordinances governing this type of work will be complied with whether specified herein or not. I understand that the granting of a permit does not presume to give authority to violate or cancel the provisions of any other federal, state or local law regulating construction or the performance of construction.

JUNEAU PERMIT CENTER - 230 S. Franklin Street - 4th Floor, Marine View Center - Mail: 155 S. Seward Street, Juneau, AK 99801
Phone: 586-0770 - FAX: 586-3365 - Inspection Requests: 586-1703 - Email: permits@ci.juneau.ak.us
Web Page: HTTP://WWW.JUNEAU.ORG/PERMITS

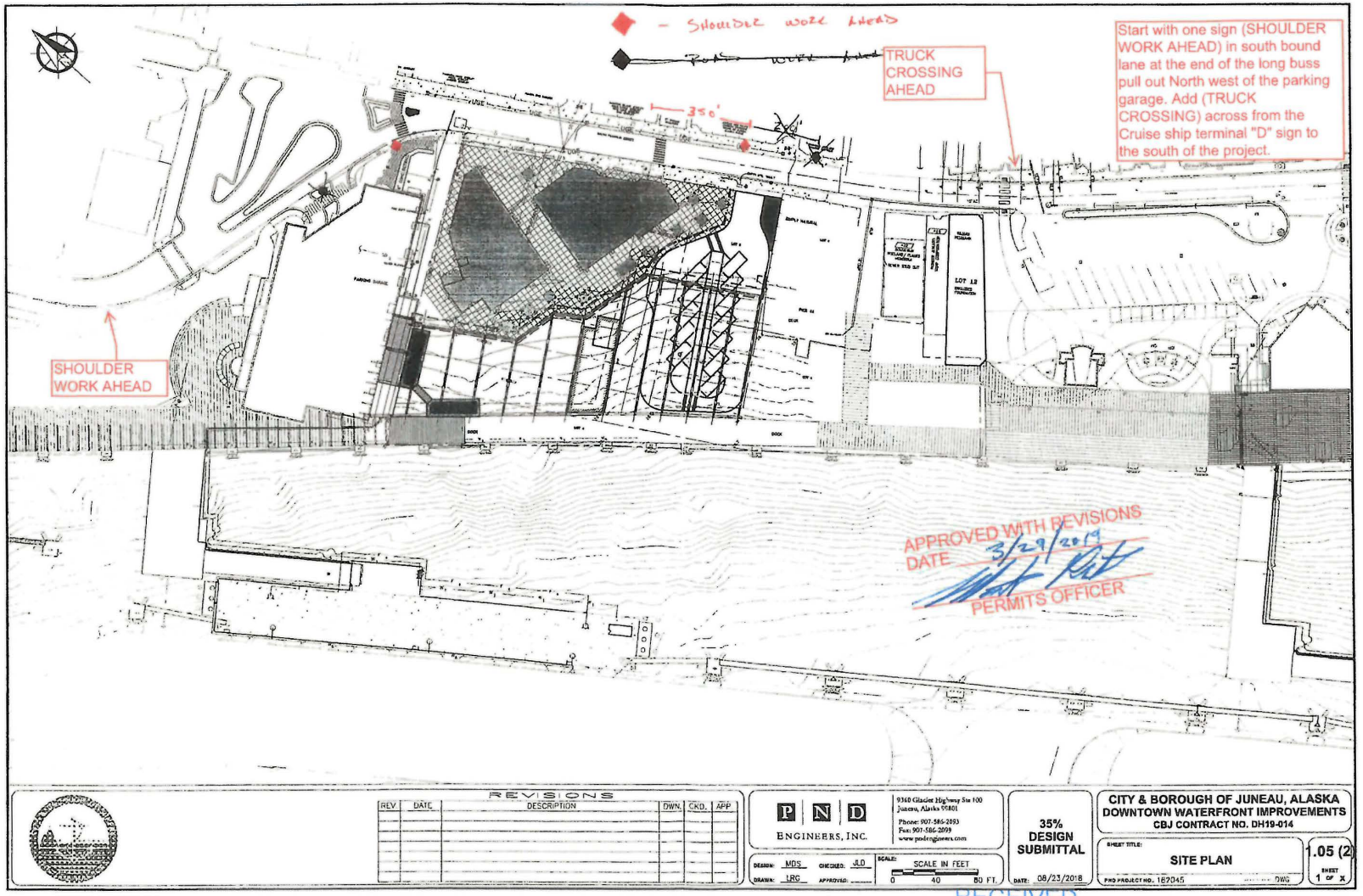

RECEIVED

APR 04 2019

PERMIT CENTER/CDD

BLD19-145

Attachment F – BLD2019-0145

Erosion Control Plan

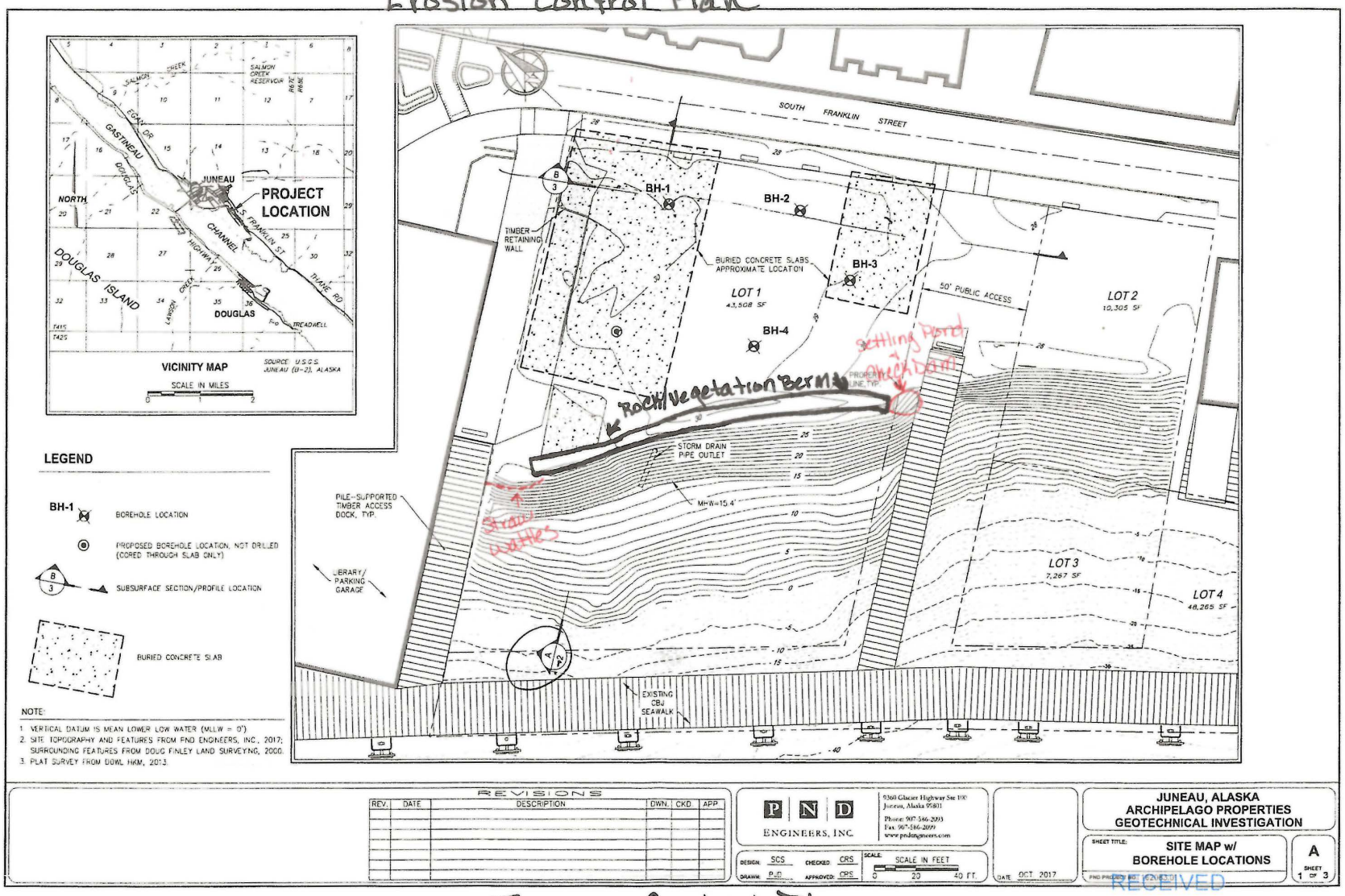

Erosion Control Plan

RECEIVED
APR 04 2019
PERMIT CENTER/CDD
BLD19-145


PANEL
02110C1567D
Eff 8/19/2013
AREA OF MINIMAL FLOOD HAZARD
Fill in
No loading
the Floodzone

CITY AND BOROUGH OF JUNEAU
ALASKA'S CAPITAL CITY
COMMUNITY DEVELOPMENT

INSPECTION REPORT

CITY & BOROUGH OF JUNEAU BUILDING DIVISION
4TH FLOOR MARINE VIEW BUILDING, 230 S. FRANKLIN ST.
MAIL: 155 SOUTH SEWARD STREET, JUNEAU, AK 99801
MAIN PHONE: 586-0770 ***INSPECTION REQUEST LINE:*** 586-1703
ONLINE INSPECTION REQUEST FORM: https://beta.juneau.org/?p=1994

PERMIT NO. _____ **DATE** _____ **TIME** _____

☐ FOOTING	☐ FRAME	☐ CROSS CONNECTION CONTROL	☐ GRADING/DRAINAGE
☐ STEM WALLS	☐ ELECTRICAL	☐ OIL & GAS PIPING/TANKS	☐ ROOF
☐ SLAB	☐ PLUMBING	☐ DRIVEWAY	☐ FINAL
☐ UNDERSLAB (Plumbing/Electrical)	☐ INSULATION	☐ WATERLINE	☐ _____
☐ TEMPORARY POWER	☐ MECHANICAL	☐ SEWER	
	☐ WOODSTOVE		

OWNER/CONTRACTOR _____

ADDRESS _____

PERMIT TYPE _____ **INSPECTION CODE** _____

☐ **CALL FOR REINSPECTION BEFORE CONCEALMENT**

☐ **CORRECTIONS OF ITEMS NOTED ABOVE WILL BE REINSPECTED AT TIME OF NEXT REQUESTED INSPECTION**

INSPECTOR: _____

I:\FORMS\BLDGFORM\Inspection Report.pub

CERTIFICATE OF LIABILITY INSURANCE

DATE (MM/DD/YYYY): 1/15/2019

THIS CERTIFICATE IS ISSUED AS A MATTER OF INFORMATION ONLY AND CONFERS NO RIGHTS UPON THE CERTIFICATE HOLDER. THIS CERTIFICATE DOES NOT AFFIRMATIVELY OR NEGATIVELY AMEND, EXTEND OR ALTER THE COVERAGE AFFORDED BY THE POLICIES BELOW. THIS CERTIFICATE OF INSURANCE DOES NOT CONSTITUTE A CONTRACT BETWEEN THE ISSUING INSURER(S), AUTHORIZED REPRESENTATIVE OR PRODUCER, AND THE CERTIFICATE HOLDER.

IMPORTANT: If the certificate holder is an ADDITIONAL INSURED, the policy(ies) must be endorsed. If SUBROGATION IS WAIVED, subject to the terms and conditions of the policy, certain policies may require an endorsement. A statement on this certificate does not confer rights to the certificate holder in lieu of such endorsement(s).

PRODUCER	CONTACT NAME: Debora Roberts
Shattuck and Grummett Insurance 301 Seward St. Juneau AK 99801	PHONE (A/C, No, Ext): (907)586-2414 FAX (A/C, No): (907)586-3770 E-MAIL ADDRESS: debbie@sginc.com
	INSURER(S) AFFORDING COVERAGE — NAIC #
	INSURER A: Alaska National Insurance Company
INSURED Trucano Construction Company, Inc.; Trucano Family Partnership 3560 N. Douglas Hwy. Juneau AK 99801	INSURER B: INSURER C: INSURER D: INSURER E: INSURER F:

COVERAGES — CERTIFICATE NUMBER: 19/20 GL, AU, WC — REVISION NUMBER:

THIS IS TO CERTIFY THAT THE POLICIES OF INSURANCE LISTED BELOW HAVE BEEN ISSUED TO THE INSURED NAMED ABOVE FOR THE POLICY PERIOD INDICATED. NOTWITHSTANDING ANY REQUIREMENT, TERM OR CONDITION OF ANY CONTRACT OR OTHER DOCUMENT WITH RESPECT TO WHICH THIS CERTIFICATE MAY BE ISSUED OR MAY PERTAIN, THE INSURANCE AFFORDED BY THE POLICIES DESCRIBED HEREIN IS SUBJECT TO ALL THE TERMS, EXCLUSIONS AND CONDITIONS OF SUCH POLICIES. LIMITS SHOWN MAY HAVE BEEN REDUCED BY PAID CLAIMS.

INSR LTR	TYPE OF INSURANCE	ADDL INSD	SUBR WVD	POLICY NUMBER	POLICY EFF (MM/DD/YYYY)	POLICY EXP (MM/DD/YYYY)	LIMITS	
A	COMMERCIAL GENERAL LIABILITY CLAIMS-MADE [X] OCCUR [X] Liquor Liability GEN'L AGGREGATE LIMIT APPLIES PER: [X] POLICY [ ] PRO-JECT [ ] LOC [ ] OTHER:	X	Y	19ALS03427	1/1/2019	1/1/2020	EACH OCCURRENCE DAMAGE TO RENTED PREMISES (Ea occurrence) MED EXP (Any one person) PERSONAL & ADV INJURY GENERAL AGGREGATE PRODUCTS - COMP/OP AGG $	$ 1,000,000 $ 100,000 $ 5,000 $ 1,000,000 $ 3,000,000 $ 3,000,000 $
A	AUTOMOBILE LIABILITY [X] ANY AUTO [ ] ALL OWNED AUTOS [ ] HIRED AUTOS [ ] SCHEDULED AUTOS [ ] NON-OWNED AUTOS	X	Y	19AAS03427	1/1/2019	1/1/2020	COMBINED SINGLE LIMIT (Ea accident) BODILY INJURY (Per person) BODILY INJURY (Per accident) PROPERTY DAMAGE (Per accident) $	$ 2,000,000 $ $ $ $
	[ ] UMBRELLA LIAB [ ] OCCUR [ ] EXCESS LIAB [ ] CLAIMS-MADE [ ] DED [ ] RETENTION $						EACH OCCURRENCE AGGREGATE $	$ $ $
A	WORKERS COMPENSATION AND EMPLOYERS' LIABILITY ANY PROPRIETOR/PARTNER/EXECUTIVE OFFICER/MEMBER EXCLUDED? (Mandatory in NH) Y/N [ ] If yes, describe under DESCRIPTION OF OPERATIONS below	N/A	Y	19AWS03427	1/1/2019	1/1/2020	[X] PER STATUTE [ ] OTH-ER E.L. EACH ACCIDENT E.L. DISEASE - EA EMPLOYEE E.L. DISEASE - POLICY LIMIT	$ 1,000,000 $ 1,000,000 $ 1,000,000

DESCRIPTION OF OPERATIONS / LOCATIONS / VEHICLES (ACORD 101, Additional Remarks Schedule, may be attached if more space is required)

This Certificate is a representation of the named insured's coverage as of the date shown. Shattuck & Grummett Insurance makes no representation that these coverages comply with or fully satisfy any insurance or indemnity requirements in any contract, written, oral, or implied.

COPY

CERTIFICATE HOLDER

State of Alaska, D.O.T.P.F.
6860 Glacier Hwy.
Juneau, AK 99801

CANCELLATION

SHOULD ANY OF THE ABOVE DESCRIBED POLICIES BE CANCELLED BEFORE THE EXPIRATION DATE THEREOF, NOTICE WILL BE DELIVERED IN ACCORDANCE WITH THE POLICY PROVISIONS.

AUTHORIZED REPRESENTATIVE

John Grummett/DEBBIE

© 1988-2014 ACORD CORPORATION. All rights reserved.

Shoulder Work (Diagram #4)

Diagram No. 4 covers stationary (longer than 15 minutes in duration) work operations or parked equipment on the shoulder with no encroachment on the traveled way.

1. Vehicles should be parked as far off the roadway as practical.
2. It is recomended that a minimum of two signs be used regardless of posted speed.
3. Use beacon.
4. If equipment operation and activities are more than 15 feet from the edge of roadway signs and cones are not required.
5. If dust from the operation reduces the sight distance to less than 500 feet, use diagram No. 9

Roadway	A	B	C	Suggested Buffer
Urban	200	200	200	150 Ft.
Standard	500	500	500	350 ft.
Freeway	500-1000	800-1600	1300-2600	500 ft.

* Vehicles parked outside the improved shoulder with no work activity present do not require sign or cones. If less than 15 feet from the edge of roadway, cones or hazard marker is recommended.

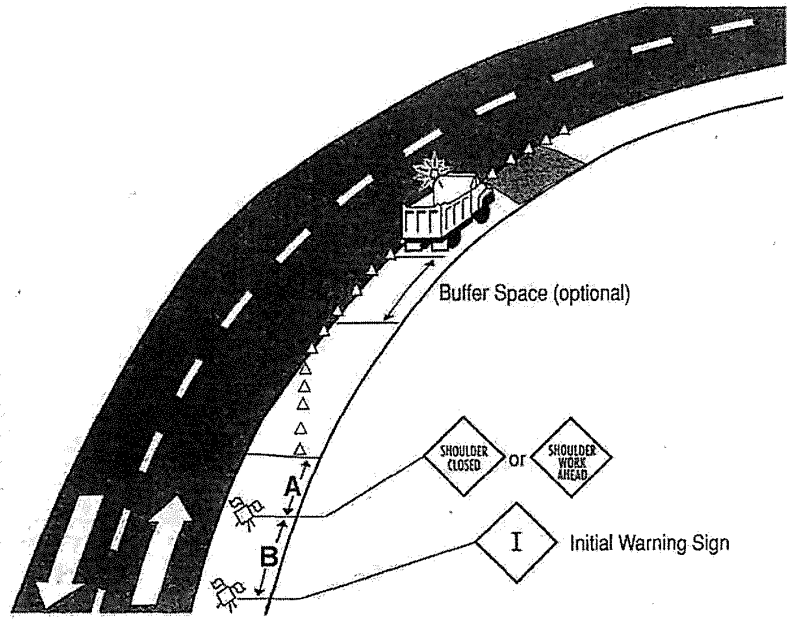

Diagram No. 4 — Shoulder Work

RECEIVED

APR 0 4 2019

PERMIT CENTER/CDD

BLD19-145

Permit No. 28964

State of Alaska

Department of Transportation and Public Facilities

Lane Closure Permit (LCP)

This permit allows the permittee to use a State owned highway Right of Way for access to, or construction and maintenance activities related to, physically contiguous land during construction, alteration, or maintenance improvements, or to allow access to utility facilities for which a permit has been issued.

Applicant:	**Trucano Construction**	
Mailing Address:	PO Box 020870	
	Juneau, AK 99802	
Contact Name:	Jeff Trucano	
E-mail Address:	trucano@alaskan.com	
Phone:	(907) 586-2444	Fax: (907) 463-3810

Traffic Control Provided by: Trucano Construction

Phone: (907) 586-2444 Fax: (907) 463-3810

24 hour Traffic Control contact person: Jeff Trucano

Phone: (907) 321-3988 Fax: _____

Permit activity location (includes all routes which will be affected):
356 South Franklin St. Juneau, AK If it is found that flaggers are needed to assist in traffic control, A Traffic Control Supervisor (TCS) with certificate of training must be on staff to oversee that work.

Reason for permit: Sidewalk removal/replacement in a DOT right of way. Trucks entering and leaving the roadway.

Start Date: 04/01/2019 End Date: 06/30/2019

Schedule details (start times, end times, days of the week, exceptions, continuous or daily operation):

Sidewalk removal/replacement will take place in the month of April, over the period of 1 week. Trucks will be making deliveries on and off for the entire duration. Working hours will be 7am - 5:30pm, Monday - Saturday.

Permittee upon signing this permit acknowledges and agrees to the following provisions:

PROVIDE EMERGENCY VEHICLE ACCESS AT ALL TIMES.

Permittee shall notify the following public agencies a minimum seven (7) days in advance: Municipal Traffic Engineer, Alaska State Troopers, Local Police, Fire Department, Emergency Medical Services, People Mover, School Bus Dispatch, Anchorage School District, and ADOT Traffic Control Engineer.

This Permit is not a property right but a temporary authorization, revocable by the State upon violation of any Permit terms. In addition, the State reserves the right to cancel this permit, for any reason, including emergencies, with advance notice. All reasonable attorney's fees and costs associated with legal or enforcement actions related to the terms and conditions of this permit will be borne by the permittee.

All signs installed in State rights of way shall be fabricated, located and installed in conformance with the Alaska Traffic Manual (ATM), Alaska Sign Design Manual (ASDS), and standard drawings and specifications. Our Traffic & Safety section shall approve all variable message signs (i.e. street name signs) prior to installation.

Implement the traffic control plan and maintain traffic control devices in accordance with the Alaska Traffic Manual and any provisions and conditions noted.

Permittee shall indemnify, defend and hold harmless the State, and its officers, employees, and contractors, from any and all claims or actions resulting from injury, death, loss, or damage sustained by any person or personal property resulting directly or indirectly from Permittee's use of or activities in the permitted area.

The Permittee will obtain all necessary Federal, State, and Municipal permits and licenses required by law, pay all taxes and special assessments lawfully imposed upon the permitted area, and pay other fees and charges assessed under applicable law.

If you damage any improvements within the state owned right of way, you will be responsible to return them to their previous condition. The Department's Maintenance and Operations section will inspect and approve the restored improvements. Improvements may include: pavement structures, sidewalks, curb and gutter, pathways, driveways, signs, traffic markings, guardrail, delineators, highway lighting systems, traffic signal systems, drainage structures and mailboxes.

If your permitted use interferes with the public's safety and/or use of facilities within State owned right of way, you will be directed to adjust or remove your traffic control.

A copy of this permit must be on site. If any of the conditions of this permit are violated, the State reserves the right to require the removal of all activities from the area.

All sign layouts shall conform to the Alaska Sign Design Specifications.

Fabricate special signs from type 8 or 9 orange fluorescent reflective sheeting on either sheet aluminum or plywood panels.

Adjust sign locations in the field to provide adequate separation from existing signs. All signs shall be visible.

Remove all traffic control devices when no longer needed.

Permittee shall clean up litter or debris generated as a result of this permit.

Obtain a letter of non-objection from the Contractor when your event crosses or parallels an active construction project. A list of active construction projects is at http://www.dot.state.ak.us and accessing the "Traveler Quicklinks" and "Construction Advisories" submenus.

Permittee upon signing this permit acknowledges and agrees to the following conditions:

An area along the work zone must be wide enough to meet ADA access specifications.

Attachments included as part of this permit are:

REQUIRED for ALL permits:

[X] Traffic Control Plan(s).
[X] Proof of Insurance
[X] Proof of Training

REQUIRED if APPLICABLE:

[X] Letter of non-objection from each impacted construction project.
[X] Permit/authorization from affected municipalities.

I, JEFF TRUCANO, acknowledge that I am acting on behalf of the above named organization with the full authority to do so. I further acknowledge and accept that TRUCANO CONSTRUCTION shall comply with all the provisions and conditions that the Department of Transportation and Public Facilities has included as a condition of issuing this permit.

Jeff [signature] — 3-29-19
Permittee Signature — Date

[signature] — 3/29/2019
DOT&PF Signature — Date

The American Traffic Safety Services Association

Hereby recognizes that

Jeff Trucano

has attended

Traffic Control Supervisor

Training Course

02/11/2015
Date

Juneau, AK
Location

Donna M. Clarke
Training & Products Dept. Director

Ryan A. Wantz
President, CEO

ATSSA
SAFER ROADS SAVE LIVES

The American Traffic Safety Services Association

Hereby recognizes that

Jeff Trucano

has attended

Traffic Control Technician

Training Course

02/09/2015
Date

Juneau, AK
Location

Donna M. Clarke
Training & Products Dept. Director

Ryan A. Wantz
President, CEO

ATSSA
SAFER ROADS SAVE LIVES

PERMITS@JUNEAU.ORG

City & Borough of Juneau
Alaska's Capital City

Grading Permit Checklist

JUNEAU PERMIT CENTER, 4TH FLOOR MARINE VIEW CENTER, (907) 586-0770

All grading must conform with CBJ Title 19.12, Excavation and Grading.

Section I: **Case Number:** BLD20190145

Applicant's Name TRUCANO CONSTRUCTION
Mailing Address 3560 NORTH DOUGLAS HWY JUNEAU, AK 99801
Phone Number (907) 586-2444
Project Address 356 S. FRANKLIN STREET
Project Parcel Number 1C070K830036

Section II:

GRADING PLAN REQUIREMENTS

Grading permit applications must be accompanied by a drawing which graphically shows the grading site and the proposed grading changes. The plan shall show the following features:

- ☐ A. Name, address and phone number of applicant
- ☐ B. Lot number, legal description, and street address of grading site
- ☐ C. Lot boundary lines
- ☐ D. Buildings (existing and proposed)
- ☐ E. All easements affecting lot
- ☐ F. Location of driveway, including width and size of culvert
- ☐ G. Streams, ditches, swales and all other drainage features including locations where drainage leaves the grading site. (PLAN SHALL SHOW ALL DRAINAGE FLOWING INTO AN APPROVED DRAINAGE WAY)
- ☐ H. Location of underground utilities (water, sewer, phone, power, tv)
- ☐ I. Limits of all proposed cuts and fills
- ☐ J. Elevations and dimensions of proposed grading and buildings
- ☐ K. All structures within 15 feet of the boundaries of the site
- ☐ L. Survey of existing terrain shown with, elevations, cross sections or contours

The Building Official may require a more detailed plan and/or survey by licensed professionals for grading on sites with steep slopes, large excavations or fills (greater than 5,000 cubic yards), or for structural fills.

RECEIVED
APR 04 2019
PERMIT CENTER/CDD

Section III:

Will there be excavation activity? ☒ YES ☐ NO

How many cubic yards? 2,000 Cubic Yards

What type of material will be excavated? CONCRETE

Will excavated material be removed from the site? ☒ YES ☐ NO

How many cubic yards of material will be removed? 2,000 Cubic Yards

What is the location of the disposal site? 2571 CHANNEL DRIVE

Has a permit been obtained for the disposal site? ☒ YES ☐ NO

Will fill be brought on to site? ☒ YES ☐ NO

How many cubic yards? 2000 Cubic Yards

What type of material? 4" MINUS SHOT ROCK

From where will the material be obtained? AJC / JUGS CRUSHING

Will stumps need to be removed? ☐ YES ☒ NO

Describe method of disposal: _____

Will erosion protection be required? ☒ YES ☐ NO

Describe method: SEE ATTACHED EROSION CONTROL PLAN

Will a retaining wall be required to hold the cut or fill? ☐ YES ☒ NO

(Note: Walls four feet or greater in height must be designed by a professional engineer licensed in the State of Alaska.)

NOTE: DURING ~~UTILITY~~ UTILITY LOCATES, ACS TOLD ME THERE IS A FIBER OPTIC LINE RUNNING TO THE DOWNTOWN LIBRARY. THIS IS A CBJ OWNED LINE THEY ARE UNWILLING TO LOCATE. IS THERE AN ASBUILT THAT SHOWS IT'S LOCATION AVAILABLE?

Section IIII:

Has a grading plan been stapled to this checklist? (Note: See Grading Plan Requirements on the back of this page.)	YES	NO
If a driveway is to be constructed to a State of Alaska Department of Transportation right-of-way, attach a copy of the ADOT driveway permit. (Note: Glacier Highway, Mendenhall Loop Road, and other major arterial roads in the CBJ are ADOT rights-of-way.) Are ADOT permits required and attached to this checklist?	YES	NO
If grading project will require a well or on-site sanitary sewer disposal, permits from the State of Alaska Department of Environmental Conservation are required. Are ADEC permits required and attached to this checklist?	YES	NO
CBJ Land Use Code may require a Conditional Use Permit be issued by the Planning Commission for Sand and Gravel Extraction. Please respond to the following questions in order to determine if the extraction is exempt from a planning permit.		
Is the extraction a necessary incident to work authorized under a valid building permit for a proposed permitted use?	YES	NO
Has a building permit been issued for the proposed permitted use?	YES	NO
Is the extraction a necessary incident to improvements which are part of an approved subdivision plat?	YES	NO
If associated with subdivision improvement, will the material excavated remain entirely on the property or original tract or parcel subdivided?	YES	NO
Is the extraction less than two feet in depth and not creating a slope greater than five feet in height or steeper than one and one-half horizontal to one vertical?	YES	NO
Does the extraction involve the removal of less than two hundred cubic yards from the lot?	YES	NO
Is the extraction a necessary incident to the location or placement of work located primarily in the public way which is exempt from the building code?	YES	NO
Is the extraction for cemetery graves, excavations for wells or tunnels, utilities or exploratory excavation totaling less than two hundred cubic yards?	YES	NO

A NO answer to one or more of the questions A through H above may indicate that a Conditional Use Permit is required.

⇒ **See Example Grading Plan. Required features are shown on example plan by encircled letters which correspond to the above list.**

1. All grading must conform with CBJ Title 19.12, Excavation and Grading. (Note: Grading activity shall comply with grading setbacks.)
2. Prior to placing fill, all organic material and overburden must be removed.
3. Stumps shall be disposed of in an approved manner.
4. If fill or excavation has the potential to endanger adjoining property, the Building Official may require a soils engineering report.
5. If drainage is modified, the site plan must show no additional drainage impact on adjoining properties.
6. All retaining walls shall be shown on the grading plan, and with a detail which shows the wall's construction. Walls four feet in height or grater must be designed by a professional engineer licensed in the State of Alaska.
7. Some projects on steep slopes will require a HILLSIDE DEVELOPMENT PERMIT as defined in section 49.70 of the municipal code. For information, contact the CBJ Community Development Department at 586-0770.
8. Fills placed on existing slopes between 5:1 and 2:1 shall be benched to minimize slippage.
9. Fills placed on slopes steeper than 2:1 must be placed in accordance with an approved soil engineer's or geologists plan or report.
10. Fills to be used to support structures must be placed in accordance with an approved plan and soils report prepared and submitted by a civil or soils engineer licensed in the State of Alaska.

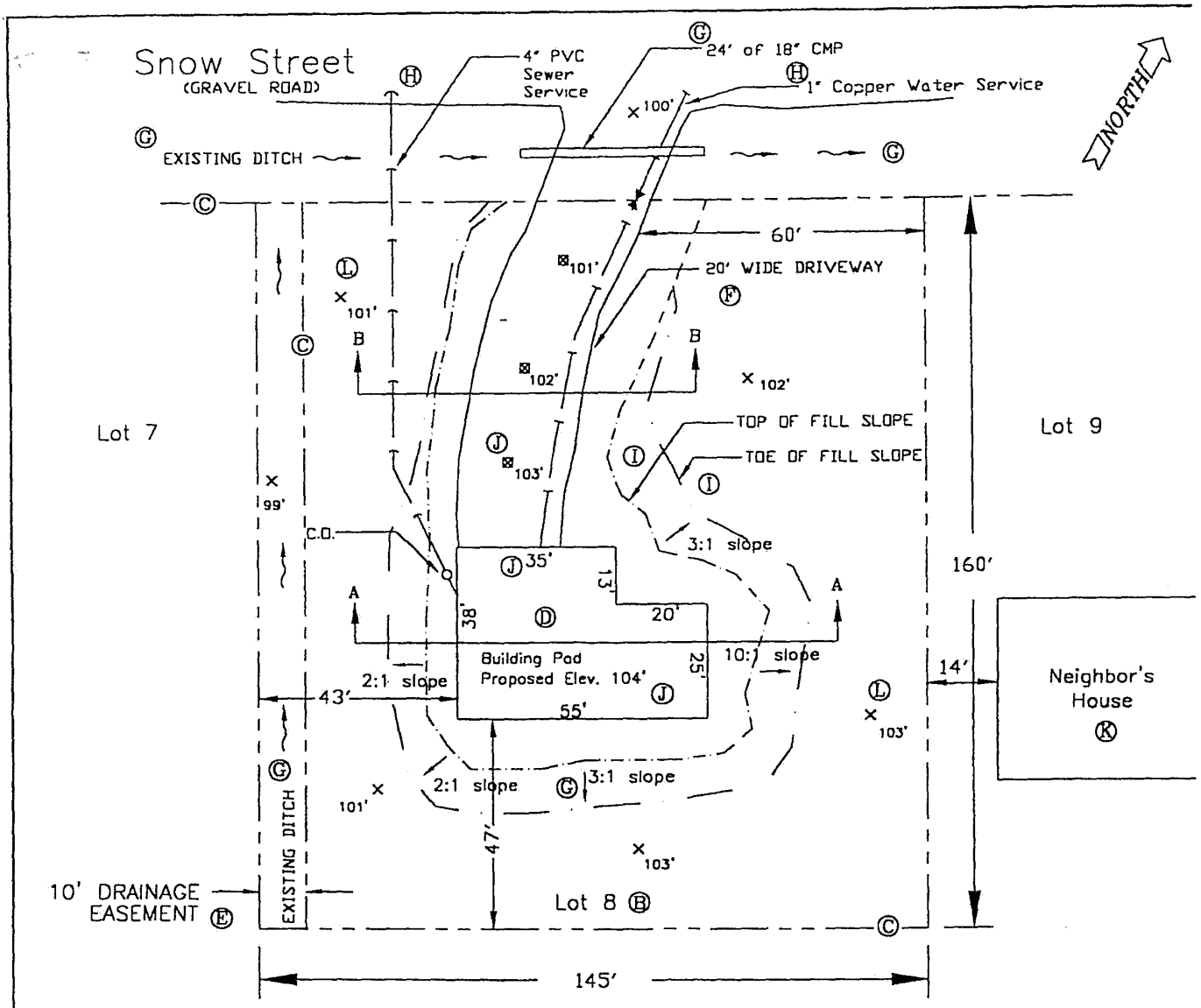

Example Grading Plan

Page 1 of 2

(Applicant shall attach own plan to grading permit application)

Key

$\times_{103'}$	Existing Elevation	Ⓛ
$\boxtimes_{103'}$	Proposed Elevation	Ⓙ
– – – –	Legal Boundary	Ⓒ
–·–·–	Top of Fill Slope	Ⓘ
— —	Toe of Fill Slope	Ⓘ
~→	Direction of Flow	Ⓖ
——→	Sewer Line	Ⓗ
——⊣	Water Line	Ⓗ

Notes:

1. Phone, Power, and TV lines are aerial. Ⓗ
2. Basis of elvevations is the center of the driveway at the intersection of the road. Ⓙ

Ⓐ Permit Applicant's Contact Information:

Jane Propertyowner
526 Fifteenth Street
Douglas, AK 99824
364-9999

Ⓑ Grading Site

Lot 8, Block B
Sleepy Subdivision
Snow Street
(No mail address assigned yet)

Form Date: January 22, 1996

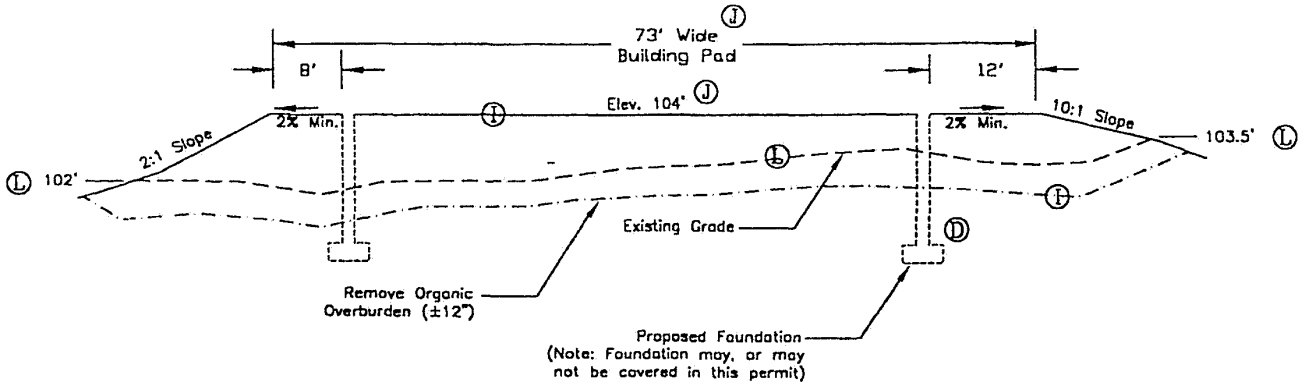

Section A–A

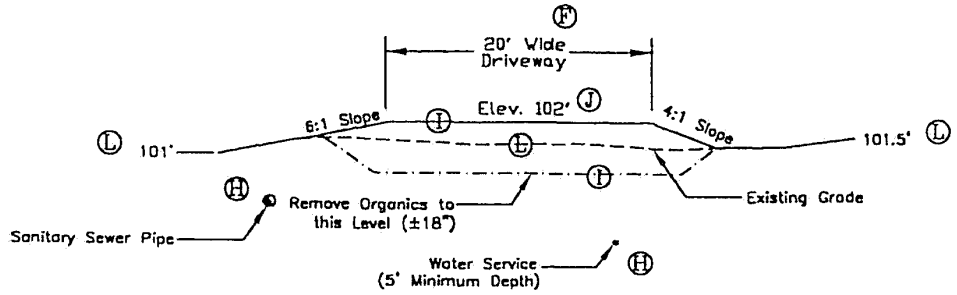

Section B–B

Example Grading Plan

Page 2 of 2

(Applicant shall attach own plan to grading permit application)

Ⓐ

Permit Applicant's
Contact Information:

Jane Propertyowner
526 Fifteenth Street
Douglas, AK 99824
364–9999

Ⓑ

Grading Site

Lot 8, Block B
Sleepy Subdivision
Snow Street
(No mail address assigned yet)

Form Date: January 22, 1996

File Copy -

ARCHIPELAGO PROPERTIES, LLC.
FOUNDATIONS DEMOLITION



VICINITY

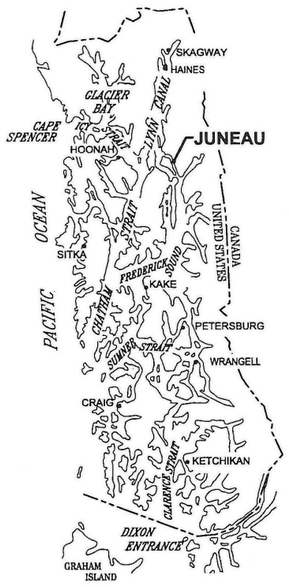

SOUTHEAST ALASKA

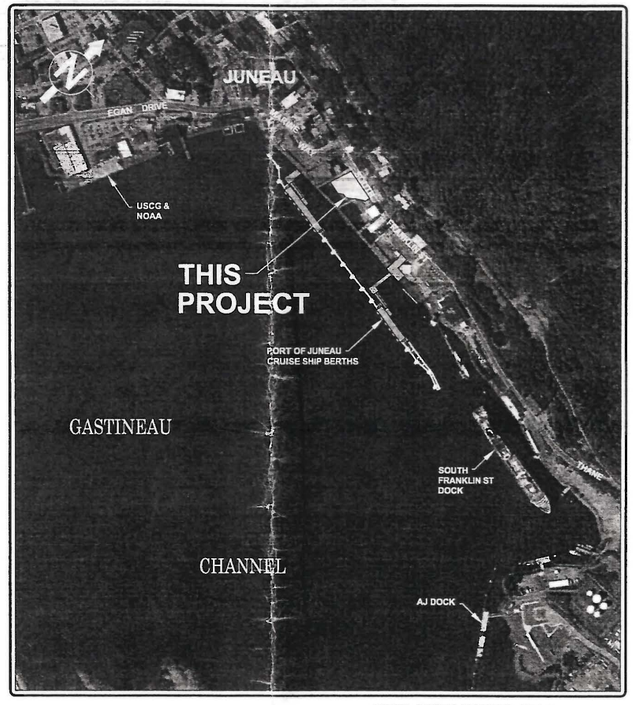

AERIAL PHOTO MODIFIED FROM:
CITY AND BOROUGH OF JUNEAU, 2006

VICINITY MAP

SCALE IN FEET
0 500 1000 FT.

TIDAL DATA

SOURCE: NOAA NOS/CO-OPS STATION ID: 9452210
JUNEAU, ALASKA 2/6/18

DESCRIPTION	ELEV. (FT.)
HIGHEST OBSERVED WATER LEVEL	+24.58
MEAN HIGHER HIGH WATER (MHHW)	+16.30
MEAN HIGH WATER (MHW)	+15.34
MEAN SEA LEVEL (MSL)	+8.58
MEAN TIDE LEVEL (MTL)	+8.47
MEAN LOW WATER (MLW)	+1.60
MEAN LOWER LOW WATER (MLLW)	0.00
LOWEST OBSERVED WATER LEVEL	-6.12

DRAWING INDEX

DWG. NO.	TITLE
	GENERAL
1	TITLE SHEET AND VICINITY MAPS
2	DEMOLITION SITE PLAN
3	TYPICAL DEMOLITION SECTION

PND ENGINEERS, INC. (PND) IS NOT RESPONSIBLE FOR SAFETY PROGRAMS, METHODS OR PROCEDURES OF OPERATION, OR THE CONSTRUCTION OF THE DESIGN SHOWN ON THESE DRAWINGS. DRAWINGS ARE FOR THE USE OF THIS PROJECT ONLY AND ARE NOT INTENDED FOR REUSE WITHOUT WRITTEN APPROVAL FROM PND. DRAWINGS ARE ALSO NOT TO BE USED IN ANY MANNER THAT WOULD CONSTITUTE A DETRIMENT DIRECTLY OR INDIRECTLY TO PND.

RECEIVED
APR 04 2019
PERMIT CENTER
BLD19-0145

PRELIMINARY

REVISIONS

REV.	DATE	DESCRIPTION	DWN.	CKD.	APP.

P N D ENGINEERS, INC.
9360 Glacier Highway Ste 100
Juneau, Alaska 99801
Phone: 907-586-2093
Fax: 907-586-2099
www.pndengineers.com

DESIGN: CRS CHECKED: CRS
DRAWN: PJD APPROVED: CRS
SCALE: AS SHOWN
DATE: FEB. 2019

ARCHIPELAGO PROPERTIES LLC
FOUNDATIONS DEMOLITION

SHEET TITLE:
TITLE SHEET AND VICINITY MAP

PND PROJECT NO.: 182051.02 C.A.N. NO.: AECC250

1

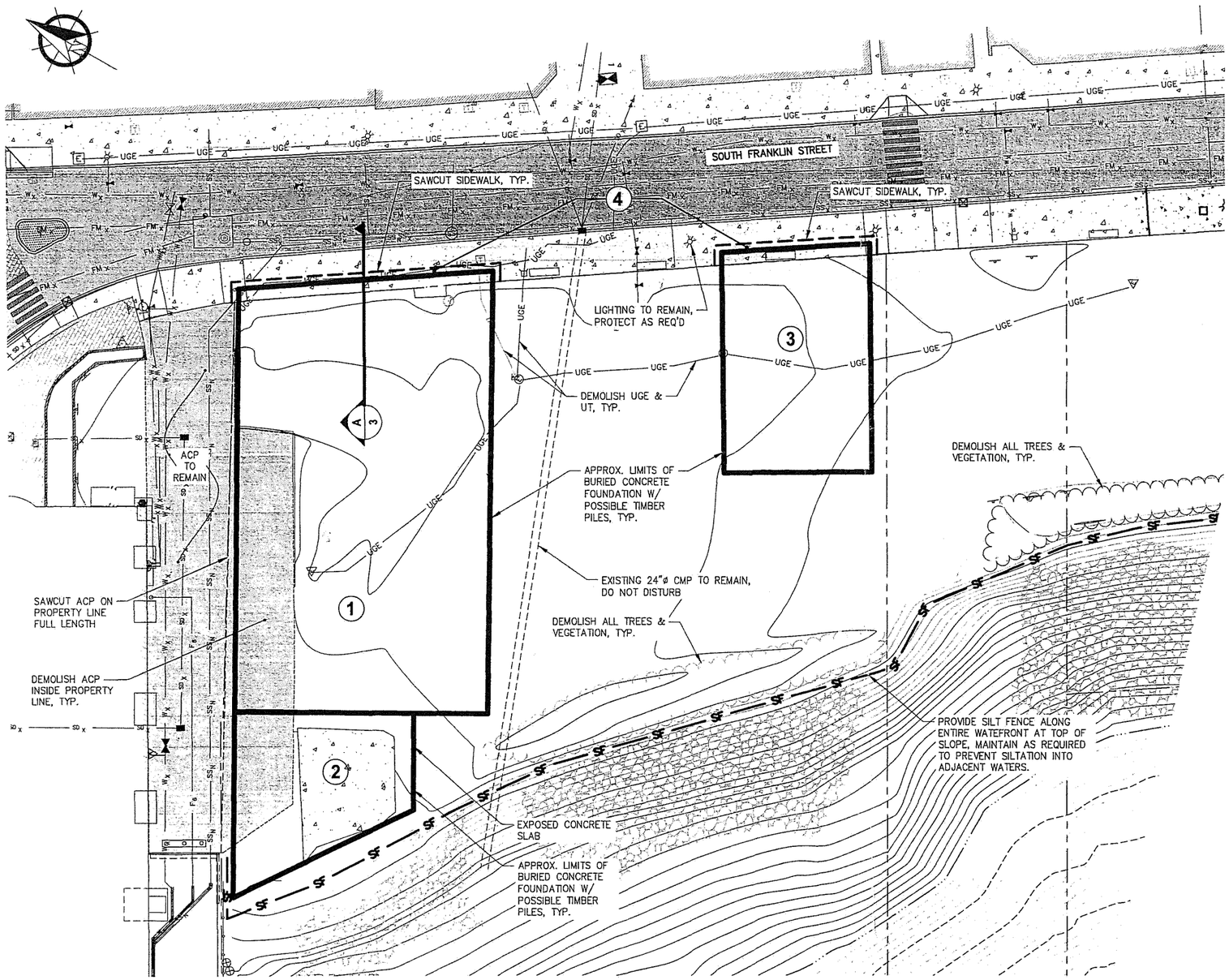

GENERAL NOTES

A	LIMITED INFORMATION IS AVAILABLE FOR BURIED FOUNDATION ELEMENTS. REVIEW ASBUILTS AND PRIOR DEMOLITION PLANS.
B	PROVIDE EROSION & SEDIMENT CONTROL FEATURES AS REQ'D TO SATISFY AKDEC REQUIREMENTS.
C	PROVIDE SAFETY BARRIERS AND FENCING AROUND ALL WORK TO PREVENT PUBLIC ACCESS.
D	PROVIDE TRAFFIC CONTROL PLAN MEETING AKDOT&PF AND CBJ APPROVAL.
E	CONTRACTOR SHALL OBTAIN UTILITY LOCATES PRIOR TO ANY GROUND DISTURBANCE. COORDINATE WITH AEL&P, PHONE, AND CABLE COMPANIES TO DISCONNECT SERVICES. DEMOLISH ALL UTILITIES WITHIN FOUNDATION LIMITS.
F	ALL DEMOLISHED MATERIALS SHALL BECOME PROPERTY OF THE CONTRACTOR AND SHALL BE REMOVED FROM THE SITE AND PROPERLY DISPOSED.
G	CONTRACTOR SHALL REMOVE ALL PILES IN THEIR ENTIRETY WITHIN DEMO LIMITS.

DEMOLITION SUMMARY

1	SALVAGE FILL ABOVE SLAB AND REUSE FOR BACKFILL OF VOID UPON COMPLETION OF FOUNDATION DEMOLITION. BUTTRESS NORTH AND EAST WALL WITH BACKFILL PRIOR TO DEMOLISHING ADJACENT CONCRETE TO PREVENT INSTABILITY AND ROTATION OF WALL.-DEMOLISH CONCRETE FOUNDATION INCLUDING SLABS, WALLS, COLUMNS, GIRDERS, FLOOR JOIST AND SPREAD FOOTINGS. STEM WALLS ON NORTH SIDES (ALLEY WAY) AND EAST (SO. FRANKLIN ST.) SIDES SHALL REMAIN EXCEPT FOR TOP 12" OF WALL. SAWCUT EXISTING ACP ON PROPERTY LINE AT NORTH SIDE OF FOUNDATION (ALLEY WAY). SAWCUT EXISTING CONCRETE SIDEWALK ON EAST SIDE OF FOUNDATION (S. FRANKLIN ST.). SAWCUT TOP OF NORTH AND EAST STEM WALLS TO REMOVE MINIMUM OF 12" BELOW SURFACE FINISHES. REMOVE ALL TIMBER PILES AND DEBRIS BELOW CONCRETE FOUNDATION PRIOR TO BACKFILLING. BACKFILL VOIDS FOLLOWING DEMOLITION WITH USEABLE EXCAVATION AND CLASS A SHOT ROCK BARROW, PLACED IN 12" MAX. LIFTS. COMPACT ALL BACKFILL LIFTS W/ 6 UNIFORM PASSES OF 15 TON VIBRATORY STEEL DRUM COMPACTOR. PROVIDE UNIFORM FINISH GRADE MATCHING ADJACENT SITE ELEVATIONS AND GRADED TO DRAIN AWAY FROM SOUTH FRANKLIN STREET.
2	SIMILAR TO ITEM (1) HOWEVER LARGE VOID BELOW SLAB DOES NOT EXIST. ONLY NORTH WALL ALONG ALLEY WAY TO REMAIN.
3	SIMILAR TO ITEM (1) HOWEVER LARGE VOID BELOW SLAB DOES NOT EXIST. STEM WALLS AND SPREAD FOOTINGS AT THIS LOCATION ARE ESTIMATED TO EXTEND 12'–15' BELOW SLAB GRADE. DEEP EXCAVATIONS ARE ANTICIPATED FOR THIS DEMOLITION. ONLY EAST WALL ALONG SOUTH FRANKLIN ST. TO REMAIN
4	SAWCUT EXISTING 4"–6" THICK SIDEWALK AND REPLACE TO EXISTING LIMITS UPON COMPLETION OF DEMOLITION.

DEMOLISH = REMOVE & DISPOSE AT CONTRACTOR PROVIDED DISPOSAL SITE.

DIAL BEFORE YOU DIG!
586-1333
UNDERGROUND POWER, TELEPHONE, T.V., COMMUNICATIONS, WATER AND SEWER LINES ARE IN THE AREA. UTILITIES SHOWN HERE DO NOT SUBSTITUTE FOR FIELD LOCATES.

PRELIMINARY

RECEIVED
APR 04 2019
PERMIT CENTER/CDD

REVISIONS

REV.	DATE	DESCRIPTION	DWN.	CKD.	APP.

P N D ENGINEERS, INC.
9360 Glacier Highway Ste 100
Juneau, Alaska 99801
Phone: 907-586-2093
Fax: 907-586-2099
www.pndengineers.com

DESIGN: CRS CHECKED: CRS
DRAWN: PJD APPROVED: CRS
SCALE: SCALE IN FEET 0 15 30 FT.
DATE: FEB. 2019

ARCHIPELAGO PROPERTIES LLC
FOUNDATIONS DEMOLITION

SHEET TITLE: **DEMOLITION SITE PLAN**

PND PROJECT NO.: 182051.02 C.A.N. NO.: AEGG259.DWG

2

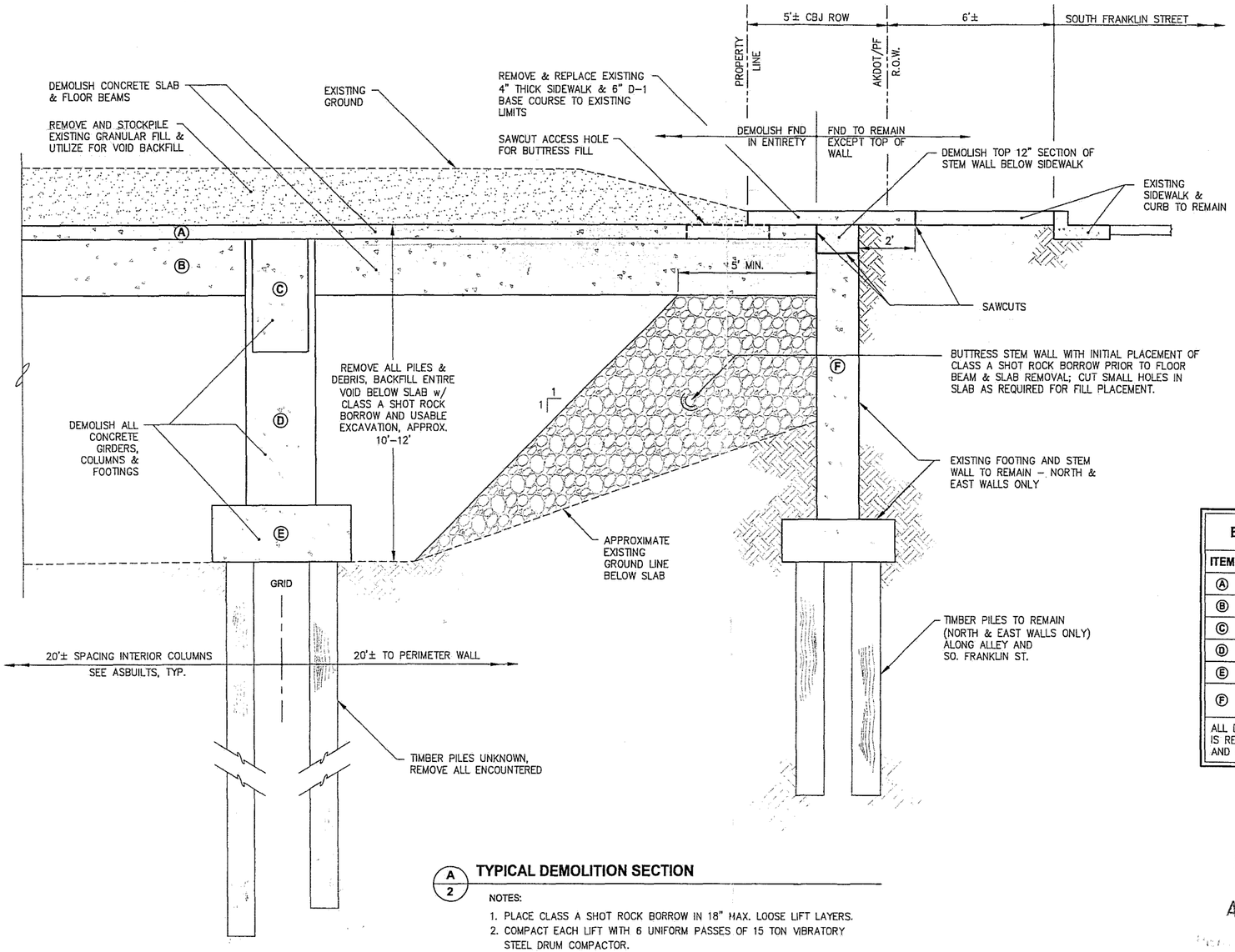

EXISTING FOUNDATION ELEMENTS	
ITEM	DESCRIPTION
Ⓐ	6"-8" SLAB
Ⓑ	12" x 24" FLOOR BEAM
Ⓒ	24" x 48" GIRDER
Ⓓ	30" x 30" COLUMN
Ⓔ	5' x 5' x 24" FOOTING
Ⓕ	18" THICK PERIMETER STEM WALL w/ FOOTING TO UNKNOWN DEPTH
ALL DIMENSIONS ARE APPROXIMATE; ALL CONCRETE IS REINFORCED; PILES ARE UNKNOWN. SEE ASBUILTS AND PHOTOGRAPHS.	

A/2 TYPICAL DEMOLITION SECTION

NOTES:

1. PLACE CLASS A SHOT ROCK BORROW IN 18" MAX. LOOSE LIFT LAYERS.
2. COMPACT EACH LIFT WITH 6 UNIFORM PASSES OF 15 TON VIBRATORY STEEL DRUM COMPACTOR.

RECEIVED
APR 04 2019
CENTER

PRELIMINARY

REVISIONS

REV.	DATE	DESCRIPTION	DWN.	CKD.	APP.

P N D ENGINEERS, INC.
9360 Glacier Highway Ste 100
Juneau, Alaska 99801
Phone: 907-586-2093
Fax: 907-586-2099
www.pndengineers.com

DESIGN: CRS CHECKED: CRS
DRAWN: PJD APPROVED: CRS
SCALE: AS SHOWN
DATE: FEB. 2019

ARCHIPELAGO PROPERTIES LLC
FOUNDATIONS DEMOLITION

SHEET TITLE: **TYPICAL DEMOLITION SECTION**

3

PND PROJECT NO.: 182051.02 C.A.N. NO.: AECC259.DWG

City & Borough of Juneau
Alaska's Capital City

BUILDING PERMIT

Permit No.
BLD20190321

* NOTE: "Building Permit" is a generic term which includes Building Safety Inspection, Grading Permits, and permits for Electrical, Plumbing and Mechanical work.

Your special attention is called to the following:

This permit is granted on the express conditions that the construction shall, in all respects, conform to the ordinances of the City and Borough of Juneau. It may be revoked at any time upon violation of any of said ordinances.

The granting of this permit does not authorize the violation of any federal, state or local law regulating construction for the violation of the terms of any deed or covenent or any zoning or other regulation.

If plan review was required, this permit must be attached to the approved drawings. The permit, plans and record of inspections must be available on site at all times while the construction is in progress and before final inspection.

The yellow posting notice must be prominently displayed to show a permit has been issued and to assist the inspectors in location of the project. This permit becomes null and void if work or construction authorized is not commenced within one year or if work or construction is suspended or abandoned for a period of one year at any time after work has commenced.

Note: City Ordinances REQUIRE a Final Inspection be approved for every Building Permit.

Inspections

Inspections can be arranged by telephoning **586-1703** or by written or faxed notification.
The Online Building Inspection Request Form is at: **www.juneau.org/permits/inspect_request.php.**
Work shall not proceed until the inspector has approved the various stages of construction. An approved Final Inspection is required.
Call before 7:00 AM for same day inspections.
Please provide the following information: 1 Permit Number, 2 Address, 3 Type of Inspection, 4 Date and Time and 5 Contact Name and Phone Number.

Job Address: **356 S FRANKLIN ST**
Permit Number: **BLD20190321**
Project Description: Downtown Waterfront Improvements phase I

Issued Date : **07/12/2019**
Parcel No: **1C070K830022**

Parcel Information : ARCHIPELAGO LT 1A

Setbacks: Zone: :
Front: 10.00 Ft. Side 1: 10.00 Ft.
Rear: 10.00 Ft. Side 2: 10.00 Ft.
Street Side: 10.00 Ft.
Comments:

Owner : ARCHIPELAGO PROPERTIES LLC
ATTN TAX DEPT
725 BROAD ST
AUGUSTA GA 30901

Applicant : CITY AND BOROUGH OF JUNEAU DOCKS A
155 S SEWARD ST
JUNEAU AK 99801

Fee Type	Date	Receipt	Amount Paid
		Total Fees Paid:	

Valuation for Permit Fee Calculations:

S.F.	Type	Rate	Amount
			1,400,000.00
		Total Valuation:	$1,400,000.00

Project Conditions and Holds:
Special Inspection - Special inspection by PND Enginering for Concrte and Reinforcing Steel, Bolts installed in Concrete, Welding, High-Strength Bolting,Pile Driving and Soil Compation. Provide weekly inspection reports and a final letter of approval before C of O.

Inspections Required: Call for inspection before covering or concealing any of the work described below. Inspections may be combined.

JUNEAU PERMIT CENTER - 230 S. Franklin Street - 4th Floor, Marine View Center - Mail: 155 S. Seward Street, Juneau, AK 99801
Phone: 586-0770 - FAX: 586-3365 - Inspection Requests: 586-1703 - Email: permits@ci.juneau.ak.us
Web Site: www.juneau.org/permits

Staff Review Sheet

Planner

Permit Intake Initials: _____

FIRE ZONE ENG WAT SEW ARCH STRUC PLUM MECH ELEC ACCESS SPEC/INSP

6/3/2019

Case No: **BLD20190321**

Site Address: 356 S FRANKLIN ST

Parcel No: 1C070K830036

Desc: Downtown Waterfront Improvements phase I

Commercial ADD

FCC Code: 329

Type of Construction: ____

New Dwelling Units: 0

Existing Dwelling Units: 0

Occupancy Class: _____

Sprinkler Substitute for Type A Construction: YES NO

Sprinkler System: FULL PARTIAL NONE Required: YES NO

Alarm System: FULL PARTIAL NONE Required: YES NO

Code Edition: IBC2012 Code Review by: _____ Date: _____

Valuation for Permit Fee Calculations:

S.F.	Type	Rate	Amount

Total Valuation:

LAND USE

ZONE/UNITS WC /

WETLAND

FLOOD ELEV 25.00

FIRM ZONE VE

FIRM MAP

LOT SIZE 43,508 SF 1.0 ACRES

SETBACKS

Front 10

Rear 10

Side 10

Other

PARKING

ANADROMOUS

EAGLES NEST

Coverage _____ Permissible/Conditional

HEIGHT _____ Permissible/Accessory

VEGETATION

HAZARD

ENGINEERING/PUB WORKS

Dwelling Units:

CITY WATER:

Permit #: UTL 19-68.

Use:

Assessment: 9000.00

Service Size: 6"

Line Size:

Meter Size:

CITY SEWER:

Permit #: UTL-19-69.

Use: COMMERCIAL

Assessment: $ 2000.00

Fixture Units: 46

LAND USE PERMITS

ADR Case #:

PLAN REVIEW APPROVALS

	Initials	Date
__ Fire	[illegible]	7/10/19
__ Zoning	[illegible]	7/9/19
X Engineering	MRM	7/1/19
X Water	MRM	7/1/19
X Sewer	MRM	7/1/19
__ Architectural	[illegible]	6/12/19
__ Structural	[illegible]	6/12/19
__ Plumbing		
__ Mechanical		
__ Electrical	[illegible]	6/6/19
__ Access		
__ Spcl Insp Form	[illegible]	7/10/19

APPROVED FOR ISSUANCE

[signature]

Signature

7/10/19

Date

PERMIT ISSUANCE FEES

__ Grading Plan Review Fee	$
__ Adjusted Plan Review Fee	$
__ Fast Track Fee	$
__ Early Start Fee	$
__ Building Permit Fee	$
__ Water Assessment Fee	$ 9000.00
__ Sewer Assessment Fee	$ 2000.00
__ Sewer Inspection Fee	$
__ Grading Permit Fee	$
__ Driveway Permit Fee	$
__ Bond for	$
__ Other	$
Total Issuance Fees	$

PERMIT ISSUANCE PAYMENTS

Date	Receipt	Check	Amount
			$
			$
			$

Parcel Tags:

5/2/16 TJF - VAR2011-0004 allows 0ft setback on NW property line for food carts.

CONDITIONS AND HOLDS ON PERMIT: (Continued on back of sheet)

BUILDING PERMIT APPLICATION (Continued)

TYPES OF INSPECTIONS

The Work Codes below contain standard inspections for the permit type. Circle additional inspections if required.

Work Codes -
B-Building Safety Inspection
B-Commercial Addition
B-Demolition
B-Grading
B-Manufactured Home Placement
B-Oil/Gas Piping
B-Porches/Decks/Carports
B-Reroof
B-Residential Electrical Service
B-Single Family Dwelling
E-ROW- Water & Sewer Service
E-ROW- Water Main
E-ROW-Driveway
E-ROW-Fire Line
E-ROW-Sewer Main
E-ROW-Sewer Main & Service
E-ROW-Sewer Service
E-ROW-Water Main & Service
E-ROW-Water Main & Sewer Main
E-ROW-Water Service
E-UTL- Sewer Main
E-UTL-Fire Line
E-UTL-Fire Line & Water Line
E-UTL-Fire Line & Water Main
E-UTL-OWTDS
E-UTL-Sewer Line
E-UTL-Pressure Sewer Line
E-UTL-Sewer Line w/ Decomm
E-UTL-Pressure Sewer Line w/Decom
E-UTL-Water Line
E-UTL-Water Main

Building-
B-Appliance/Chimney
B-Bonding
B-Building Final
B-Building Service
B-Combustion Air
B-Commercial Hoods
B-Conduit & Raceway Systems
B-Cross Connection Control
B-Demo Electric Safed Off
B-Demo Excavation Filled
B-Demo Sewer/Water Capped
B-Demolition Final
B-Devices and Equipment
B-Electrical Final
B-Fire Dampers/Sprinklers
B-Fire Separation/Rated Assemb
B-Foundation, Forms & Reinf Steel
B-Framing
B-Grounding
B-Heat Piping
B-Insulation/Vapor Barrier
B-Masonry
B-Mechanical Final
B-Meter Yoke
B-Meter Yoke with Meter
B-MH Foundation
B-MH Utilities
B-Mobile Home Final
B-Plumbing Final
B-Oil & Gas Piping/Tanks
B-Rough Electrical
B-Rough Plumbing
B-Service/Panel
B-Setback Verification
B-Smoke/Carbon Monoxide Detec
B-Special Inspection
B-Specialty Piping
B-Temporary Power
B-Under Slab Utilities
B-Ventilation/Plenums & Ducts
B-Vents (Bath, Dryer, Kitchen, etc.)
B-Yellow Tag Electrical
B-Zoning Final

Enforcement -
ENF - Enforcement Status Check

Miscellaneous -
M-Site Visit

Fire -
F-Address and Required Signage
F-Alarm Panel/Transmitter
F-Alarm Zones
F-Blasting on Individual Lot
F-Childcare/Daycare Inspection
F-Commercial Dev Land Clearing
F-Courtesy Inspection
F-Emergency Lighting Test
F-Events in Mall Hallways
F-Explosives Shipment-Unest Loc
F-FDC Location
F-Fire Extinguishers
F-Fire Final
F-Fire Hydrant Placement
F-Fire Related Inspection
F-Fixed Welding Inspection
F-Flammable/Combustible Material
F-Hazardous Material Storage
F-Kitchen Hood Suppression Test
F-Liquor License Renewal
F-Open Burning Inspection
F-Paint Booth Inspection
F-Proper Sprinkler System Bracing
F-Roof/Tar Kettle Inspection
F-Special Event Structure
F-Sprinkler Head Placement
F-Sprinkler Hydrostatic Test
F-Subdivision Land Clearing
F-Subdivision/Road Blasting
F-System Acceptance Test
F-Temporary Welding Inspection
F-Underground Fire Line Flush

Engineering -
E-Access to Curb Stop Valve
E-ADEC on-site Sewer Final
E-ADEC on-site Water Main Final
E-Asbuilt Survey Required
E-Bacteriological Test
E-Bedding / Backfill
E-Billing Authorization
E-Blasting Verification
E-Bore Flush
E-CBJ Waste Water Department
E-CBJ Water Department
E-Chlorination Test
E-Cleanouts
E-Continuity
E-Cross Connection Control
E-Culvert
E-Curb Box
E-Curb Cut Final
E-Curb Cut Reinforcement
E-Curb Stop
E-Depth
E-Electrical Utility
E-Final
E-Fire Hydrants
E-Fire Line Final
E-General Engineering Final
E-Grade
E-Grading/Drainage
E-Headwalls
E-Installation of Access & Ports
E-Installation of Insulation
E-Location
E-Manhole Tap
E-Manholes - Sewer Main
E-Material
E-OWTDS Inspection
E-Pressure Test
E-Pump Ticket
E-Residual / Free Chlorine
E-Retaining Walls
E-ROW - Final
E-ROW Restoration
E-Septic Decommission
E-Sewer Connection
E-Sewer Disconnect
E-Sewer Final
E-Sewer Main Final
E-Sewer Service Tap
E-Sewer System
E-Sidewalk Final
E-Sidewalk Reinforcement
E-Size
E-Soil
E-State D.O.T. Approval
E-Storm Drains
E-Street Patch
E-Streets
E-Telephone Utility
E-Thaw Waiver
E-Thaw Wire
E-Thrust Blocks
E-Turn Water OFF
E-Turn Water ON
E-TV Cable
E-Utility Ribbon
E-Utility Trench
E-Water Final
E-Water Meter Required
E-Water Meter/Yoke
E-Water Service Tap
E-Water System
E-Water Tap
E-Width

ADDITIONAL CONDITIONS AND HOLDS (STAFF)

City & Borough of Juneau
Alaska's Capital City

Application Date: **June 3, 2019**

BUILDING PERMIT APPLICATION

NOTE: THIS IS NOT A BUILDING PERMIT

* NOTE: "Building Permit" is a generic term which includes Building Safety Inspections, Grading Permits, and permits for Electrical, Plumbing and Mechanical work.

Case No: **BLD20190321**

Case Description: Downtown Waterfront Improvements phase I

Site Address: **356 S FRANKLIN ST**

Check No. of Existing Dwelling Units:

Parcel No: 1C070K830036
1C070K830037
1C070K830038
1C070K830039

No. of New Dwelling Units: 0

Legal Description: ARCHIPELAGO LT 1

No. of Removed Dwelling Units: 0

Applicant : CITY AND BOROUGH OF JUNEAU DOCKS AND HARBORS
155 S SEWARD ST
JUNEAU AK 99801

PH1 586-0398

Owner: ARCHIPELAGO PROPERTIES LLC
ATTN TAX DEPT
725 BROAD ST
AUGUSTA GA 30901

PH: _____ FAX _____

Contractor: TO BE BID

Valuation for Permit Fee Calculations:

S.F.	Type	Rate	Amount

Total Valuation:

Associated Cases:

None.

Parcel Tags:

5/2/16 TJF - VAR2011-0004 allows 0ft setback on NW property line for food carts.

Notes and Conditions:

Applicant's Signature
(Owner, Contractor or Authorized Agent)

Date

Staff Acceptance

I hereby certify that I have read and examined this application and know the same to be true and correct. I further certify that all provisions of laws and ordinances governing this type of work will be complied with whether specified herein or not. I understand that the granting of a permit does not presume to give authority to violate or cancel the provisions of any other federal, state or local law regulating construction or the performance of construction.

JUNEAU PERMIT CENTER - 230 S. Franklin Street - 4th Floor, Marine View Center - Mail: 155 S. Seward Street, Juneau, AK 99801
Phone: 586-0770 - FAX: 586-3365 - Inspection Requests: 586-1703 - Email: permits@ci.juneau.ak.us
Web Page: HTTP://WWW.JUNEAU.ORG/PERMITS

City & Borough of Juneau
Alaska's Capital City

UTILITY PERMIT

Permit No.
UTL20190068

* NOTE "Utility Permit" is a generic term which includes Water Connection Permits, Sewer Connection Permits, Water Inspections and Sewer Inspections.

Your special attention is called to the following:

This permit is granted on the express conditions that the construction shall, in all respects, conform to the ordinances of the City and Borough of Juneau. It may be revoked at any time upon violation of any of said ordinances.

The granting of this permit does not authorize the violation of any federal, state or local law regulating construction for the violation of the terms of any deed or covenent or any zoning or other regulation.

If plan review was required, this permit must be attached to the approved drawings. The permit, plans and record of inspections must be available on site at all times while the construction is in progress and before final inspection.

The yellow posting notice must be prominently displayed to show a permit has been issued and to assist the inspectors in location of the project. This permit becomes null and void if work or construction authorized is not commenced within one year or if work or construction is suspended or abandoned for a period of one year at any time after work has commenced.

Inspections can be arranged by telephoning **586-1703** or by written or faxed notification.
The Online Building Inspection Request Form is at: **www.juneau.ak.us/cdd/insp_req.htm**.
Work shall not proceed until the inspector has approved the various stages of construction.

Call before 7:00 AM for same day inspections.

Job Address: **356 S FRANKLIN ST**
Permit Number: **UTL20190068**
Project Description: 6" customer water line

Issued Date : **07/12/2019**
Parcel No: **1C070K830022**
UTO Date: **07/12/2020**

Parcel Informati ARCHIPELAGO LT 1A

Owner : ARCHIPELAGO PROPERTIES LLC
ATTN TAX DEPT
725 BROAD ST
AUGUSTA GA 30901

Applicant : CITY AND BOROUGH OF JUNEAU DOCK
155 S SEWARD ST
JUNEAU AK 99801

Fee Type	Date	Receipt	Amount Paid

Total Fees Paid:

Project Conditions and Holds:
None.

Inspections Required: Call for inspection before covering or concealing any of the work described below. Inspections may be combined.

E-Size	E-Depth	E-Curb Box
E-Curb Stop	E-Access to Curb Stop V:	E-Thaw Wire
E-Pressure Test	E-Water Meter/Yoke	E-Cross Connection Cont
E-Thaw Waiver	E-Billing Authorization	E-ROW Restoration
E-Water Final		

JUNEAU PERMIT CENTER - 230 S. Franklin Street - 4th Floor, Marine View Center - Mail: 155 S. Seward Street, Juneau, AK 99801
Phone: 586-0770 - FAX: 586-3365 - Inspection Requests: 586-1703 - Email: permits@mail.ci.juneau.ak.us

City & Borough of Juneau
Alaska's Capital City

UTILITY PERMIT

Permit No.
UTL20190069

* NOTE: "Utility Permit" is a generic term which includes Water Connection Permits, Sewer Connection Permits, Water Inspections and Sewer Inspections.

Your special attention is called to the following:

This permit is granted on the express conditions that the construction shall, in all respects, conform to the ordinances of the City and Borough of Juneau. It may be revoked at any time upon violation of any of said ordinances.

The granting of this permit does not authorize the violation of any federal, state or local law regulating construction for the violation of the terms of any deed or covenent or any zoning or other regulation.

If plan review was required, this permit must be attached to the approved drawings. The permit, plans and record of inspections must be available on site at all times while the construction is in progress and before final inspection.

The yellow posting notice must be prominently displayed to show a permit has been issued and to assist the inspectors in location of the project. This permit becomes null and void if work or construction authorized is not commenced within one year or if work or construction is suspended or abandoned for a period of one year at any time after work has commenced.

Inspections can be arranged by telephoning **586-1703** or by written or faxed notification.
The Online Building Inspection Request Form is at: **www.juneau.ak.us/cdd/insp_req.htm**.
Work shall not proceed until the inspector has approved the various stages of construction.

Call before 7:00 AM for same day inspections.

Job Address: **356 S FRANKLIN ST**
Permit Number: **UTL20190069**
Project Description: install of new sewer line.

Issued Date : **07/12/2019**
Parcel No: **1C070K830022**
UTO Date: **07/11/2020**

Parcel Informati ARCHIPELAGO LT 1A

Owner : ARCHIPELAGO PROPERTIES LLC
ATTN TAX DEPT
725 BROAD ST
AUGUSTA GA 30901

Applicant : CITY AND BOROUGH OF JUNEAU DOCK
155 S SEWARD ST
JUNEAU AK 99801

Fee Type	Date	Receipt	Amount Paid

Total Fees Paid:

Project Conditions and Holds:
None.

Inspections Required: Call for inspection before covering or concealing any of the work described below. Inspections may be combined.

E-Size	E-Depth	E-Material
E-Soil	E-Sewer Connection	E-Cleanouts
E-Billing Authorization	E-Grade	E-ROW Restoration
E-Sewer Final		

JUNEAU PERMIT CENTER - 230 S. Franklin Street - 4th Floor, Marine View Center - Mail: 155 S. Seward Street, Juneau, AK 99801
Phone: 586-0770 - FAX: 586-3365 - Inspection Requests: 586-1703 - Email: permits@mail.ci.juneau.ak.us

SPECIAL INSPECTION PROPOSAL FORM

No

Note: this form must be completed by the Owner or Architect/Engineer of Record and approved by the Building Official prior to issuance of a Building Permit. The qualified individual special inspector must be identified along with their firm. Special Inspector may not be employed by the Contractor or anyone responsible for the construction work.

PROJECT DWI DATE 7/8/19
OWNER CMT Docks & HARBORS PERMIT APPLICATION NUMBER BLD2019032.1

PROPOSED SPECIAL INSPECTOR Firm: PND ENGINEERS INC. and Individual: Mark SAMS
(Please fill out one of these forms for each Special Inspector on this project. Attach proposed inspector's qualifications.)

PROPOSED TESTING AGENCIES PDC ENGINEERS FOR MATERIAL TESTING
(Specify which catagory they are testing.)

TYPES OF INSPECTIONS REQUIRED:

Check each type of inspection required by Architect/Engineer of Record as indicated on the approved building plans and specifications.

☑ 1. CONCRETE
Inspection Scope & Schedule* ALL STRUCTURAL CONCRETE INCLUDING SUSPENDED SLABS, RETAIN WALLS, AND FOUNDATIONS. VERIFY FORMWORK, SIZE, AND LOCATION.
Frequency of Sampling Materials SAMPLE ONCE PER 50CY OF PLACED CONCRETE OR ONCE PER DAY
Frequency of Testing Compressive Strength TESTING shall be (1) 7-DAY, (1) 14-DAY, AND (3) 28-DAY

☑ 2. BOLTS INSTALLED IN CONCRETE
Inspection Scope & Schedule* Verify ALL Highstrength BOLTS For Grade, Length, and LOCATION. Inspect visually prior to concrete placement.

☐ 3. SPECIAL MOMENT - RESISTING CONCRETE FRAME
Inspection Scope & Schedule* NA
Frequency of Sampling Materials
Frequency of Testing

☑ 4. REINFORCING STEEL AND PRESTRESSED STEEL TENDONS
Inspection Scope & Schedule* ALL Reinforcement shall be verified For Size, Grade, Location, Spacing and Cover
Method of Testing Visual

5. WELDING

☐ A. SPECIAL MOMENT - RESISTING STEEL FRAMES
Inspection Scope & Schedule* NA
Type of non-destructive testing
Frequency of Tests

☑ B. STRUCTURAL WELDING INCLUDING REINFORCING STEEL
Inspection Scope & Schedule* ALL Field WELDS shall be visually inspected For weld size, Length, Location, And Discontinuities.
Type of non-destructive testing Visual
Frequency of Tests Periodic For fillet welds 5/16" or less AND Continuous For All other welds.

☑ 6. HIGH-STRENGTH BOLTING
Inspection Scope & Schedule* Verify BOLT Pretension with Skidmore Whilhelm Device and Turn-OF-THE-NUT Method. check BOLTS For Grade, size and washers.
Method of Testing Visual Turn-OF-NUT METHOD ON EACH BOLT.
Frequency of Testing Test (3) Bolts OF each Diameter and length w/ Skidmore Device.

☐ 7. STRUCTURAL MASONRY
Inspection Scope & Schedule* NA
Frequency of Sampling Materials
Frequency of Testing

☐ 8. REINFORCED GYPSUM CONCRETE
Inspection Scope & Schedule* NA
Frequency of Sampling Materials
Frequency of Testing

☐ **9. INSULATING CONCRETE FILL**
Inspection Scope & Schedule* NA
Frequency of Sampling Materials
Frequency of Testing

☐ **10. SPRAYED-ON FIREPROOFING**
Inspection Scope & Schedule* NA
Method of Inspection
Frequency of Sampling Materials
Frequency of Testing

☑ **11. PILING, DRILLED PIERS AND CAISSONS**
Inspection Scope & Schedule* Verify pile capacity in compression & Tension Recording Blow counts and Maximum energy Inspect Each pile During Driving
Method of Inspection Visual

☐ **12. SHOTCRETE**
Inspection Scope & Schedule* NA
Method of Inspection
Frequency of Sampling Materials
Frequency of Testing

☑ **13. SPECIAL GRADING, EXCAVATION AND FILLING**
Inspection Scope & Schedule* Verify Extent of Excavation Fill material Compliance w/ Compaction, Compaction Effort and soil Density After Compaction w/ Proctor
Method of Testing Soil Density Level of Effort For Shot Rock, Nuclear Densometer For Base Course.

☐ **14A. SPECIAL CASES** TYPE: NA
Inspection Scope & Schedule*
Method of Inspection
Other

☐ **14B. SPECIAL CASES** TYPE: NA
Inspection Scope & Schedule*
Method of Inspection
Other

☐ **14C. SPECIAL CASES** TYPE: NA
Inspection Scope & Schedule*
Method of Inspection
Other

SPECIAL INSPECTOR CERTIFICATION:
I hereby certify that I am qualified to perform the special inspection items marked above, that I will perform the special inspections at the appropriate times scheduled by the contractor and that I will submit weekly and final reports.

Special Inspector: Mark Sams MS Date: 7/6/19

OWNER CERTIFICATION: (May be signed by Architect /Engineer of Record on Owner's behalf.)
I hereby certify that I will employ the aforementioned Special Inspector to perform the inspections shown above.

Owner: [signature] Date: 7/10/19

BUILDING OFFICIAL'S APPROVAL OF PROPOSAL OF SPECIAL INSPECTION:

Building Official: John Young For Charlie Ford Date: 7/10/19

Note:
Special Inspection weekly reports must be submitted to the owner and to the Building Official within 5 working days of the last day of the week being reported to avoid Suspension of the Building Permit and possible Stop Work Order.
A monthly summary letter is required for overall status including any outstanding items that require followup. The final special inspection approval letter(s) must be submitted before use or occupancy. Any variation to the special inspection proposal requires prior approval of the Building Official.

* (extent of work inspected; continuous or periodic, frequency)

(SPECINSP XLS Revised: 6/4/08)

CITY & BOROUGH OF JUNEAU - DOCKS & HARBORS

DOWNTOWN WATERFRONT IMPROVEMENTS PHASE I

CBJ CONTRACT NO. DH19-014



VICINITY

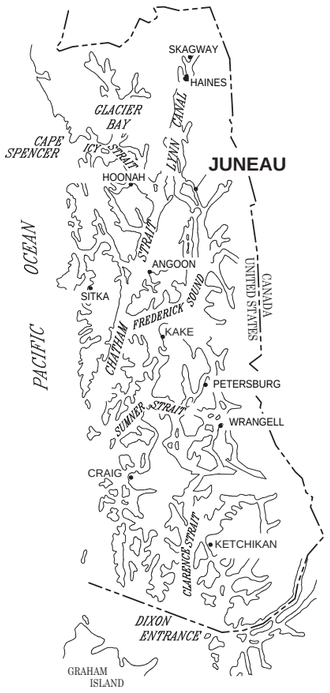

SOUTHEAST ALASKA



VICINITY MAP

SCALE IN FEET
0 400 800 FT.

TIDAL DATA

SOURCE: NOAA NOS/CO-OPS STATION ID: 9452210
JUNEAU, ALASKA 2/6/18

DESCRIPTION	ELEV. (FT.)
HIGHEST OBSERVED WATER LEVEL	+25.1
MEAN HIGHER HIGH WATER (MHHW)	+16.3
MEAN HIGH WATER (MHW)	+15.3
MEAN SEA LEVEL (MSL)	+8.6
MEAN TIDE LEVEL (MTL)	+8.5
MEAN LOW WATER (MLW)	+1.6
MEAN LOWER LOW WATER (MLLW)	0.0
LOWEST OBSERVED WATER LEVEL	-5.7

PND ENGINEERS, INC. (PND) IS NOT RESPONSIBLE FOR SAFETY PROGRAMS, METHODS OR PROCEDURES OF OPERATION, OR THE CONSTRUCTION OF THE DESIGN SHOWN ON THESE DRAWINGS. DRAWINGS ARE FOR THE USE OF THIS PROJECT ONLY AND ARE NOT INTENDED FOR REUSE WITHOUT WRITTEN APPROVAL FROM PND. DRAWINGS ARE ALSO NOT TO BE USED IN ANY MANNER THAT WOULD CONSTITUTE A DETRIMENT DIRECTLY OR INDIRECTLY TO PND.

P N D ENGINEERS, INC.
9360 Glacier Highway Ste 100
Juneau, Alaska 99801
Phone: 907-586-2093
Fax: 907-586-2099
www.pndengineers.com

DESIGN: CRS CHECKED: CRS
DRAWN: PJD APPROVED: CRS
SCALE: AS SHOWN
DATE: 5/23/2019

STATE OF ALASKA 49TH Charles R. Somerville CE-8845 REGISTERED PROFESSIONAL ENGINEER

DOWNTOWN WATERFRONT IMPROVEMENTS PHASE I
CBJ CONTRACT NO. DH19-014

SHEET TITLE:
TITLE SHEET AND VICINITY MAP

PND PROJECT NO.: 182045 C.A.N. NO.: AECC250

G1.01

DRAWING INDEX

DWG NO.	TITLE
	GENERAL
G1.01	TITLE SHEET AND VICINITY MAP
G1.02	DRAWING INDEX
G1.03	GENERAL NOTES, LEGEND AND ABBREVIATIONS
G1.04	EXISTING CONDITIONS, SURVEY CONTROL AND BOREHOLE LOCATIONS
G1.05	DEMOLITION SITE PLAN
G1.06	DEMOLITION SECTIONS & PHOTOS
G1.07	DEMOLITION SECTIONS & PHOTOS
G1.08	DEMOLITION SECTIONS
G1.09	DEMOLITION DETAILS
G1.10	OVERALL SITE PLAN
G1.11	STAGING AREAS
	CIVIL
C1.01	PARTIAL SITE PLAN
C1.02	PARTIAL CONCRETE DECK GRADING PLANS
C1.03	POINT LAYOUT TABLES
C1.04	TYPICAL SITE SECTIONS
C1.05	TYPICAL SITE SECTIONS
C1.06	CIVIL DETAILS
C1.07	STORM DRAIN PLAN
C1.08	WATER & SEWER UTILITY PLAN
C1.09	STORM DRAIN DETAILS
C1.10	STORM DRAIN DETAILS
C1.11	WATER & SEWER DETAILS
C1.12	WATER & SEWER DETAILS
C1.13	STRIPING & SIGNAGE PLAN
C1.14	STRIPING, BUMPER CURB & DRIVEWAY CURB CUT
C1.15	APPROACH DOCK UTILITIES EXISTING CONDITION
C1.16	APPROACH DOCK UTILITIES REPLACEMENT PLAN
C1.17	APPROACH DOCK UTILITIES SUPPORT DETAILS

DRAWING INDEX (CONT.)

DWG NO.	TITLE
	STRUCTURAL
S1.01	STRUCTURAL GENERAL NOTES
S1.02	PILE SCHEDULES
S1.03	PILE TYPICAL DETAILS
S1.04	PILE TYPICAL DETAILS
S1.05	TYPICAL DOCK FRAMING DETAILS
S1.06	TYPICAL DOCK FRAMING DETAILS
S1.07	LIGHT POLE TYPICAL DETAILS
S1.08	LIGHT POLE TYPICAL DETAILS
S1.09	CONCRETE RETAINING WALL PLAN AND PROFILE
S1.10	CONCRETE RETAINING WALL SECTIONS
S1.11	CONCRETE RETAINING WALL SECTIONS AND DETAILS
S1.12	CONCRETE RETAINING WALL DETAILS
S1.13	CONCRETE RETAINING WALL PEDESTAL DETAILS
S1.14	CONCRETE RETAINING WALL DETAILS
S1.15	TRANSITION PLATE PARTIAL PLAN AND SECTION
S1.16	TRANSITION PLATE LAYOUT
	STRUCTURAL - CONCRETE DECK
S2.01	CONCRETE DECK PARTIAL PLAN
S2.02	CONCRETE DECK ELEVATION AND SECTION
S2.03	CONCRETE DECK FRAMING PLAN
S2.04	PILE CAP PLAN
S2.05	PILE CAP PLAN
S2.06	PILE CAP PLAN
S2.07	CONCRETE DECK SECTIONS
S2.08	CONCRETE DECK DETAILS
S2.09	CONCRETE DECK DETAILS
S2.10	CONCRETE DECK RAILING SECTIONS AND ELEVATIONS
S2.11	CONCRETE WALL SECTIONS AND MISCELLANEOUS RAILING DETAIL
S2.12	MISCELLANEOUS RAILING DETAIL
S2.13	SWING GATE PLAN, ELEVATION, AND SECTION
S2.14	PARKING CANOPY PLAN
S2.15	PARKING CANOPY SECTIONS AND DETAILS
S2.16	PARKING CANOPY SECTIONS AND DETAILS
S2.17	PARKING CANOPY SECTIONS AND DETAILS
S2.18	ACCESS PLATFORM

DRAWING INDEX (CONT.)

DWG NO.	TITLE
	STRUCTURAL - TIMBER DECK
S3.01	TIMBER DECK PARTIAL PLAN
S3.02	TIMBER DECK SECTION
S3.03	TIMBER DECK FRAMING PLAN
S3.04	TIMBER DECK OVER FRAMING
S3.05	PILE CAP PLAN
S3.06	PILE CAP PLAN
S3.07	ADA APPROACH RAMP ELEVATION AND SECTION
S3.08	TIMBER DECK SECTIONS AND DETAILS
S3.09	TIMBER OVER FRAMING DETAILS
S3.10	PEDESTRIAN GUARDRAIL ELEVATION
S3.11	PEDESTRIAN GUARDRAIL DETAILS
S3.12	PEDESTRIAN GUARDRAIL SECTION AND DETAILS
	STRUCTURAL - TIMBER DECK MODIFICATION
S4.01	SEAWALK MODIFICATIONS PLAN / ELEVATION
S4.02	SEAWALK MODIFICATIONS PLAN AND SECTIONS
S4.03	SEAWALK MODIFICATION DETAILS
S4.04	SEAWALK DECK MODIFICATION DETAILS
S4.05	SEAWALK DECK MODIFICATION DETAILS
	STRUCTURAL - ANODES
S5.01	PILE ANODES
	LANDSCAPE
L1.01	CONCRETE PAVING FINISH LAYOUT PLAN
	ELECTRICAL
E1.01	OVERALL SITE PLAN - ELECTRICAL 1 OF 3
E1.02	OVERALL SITE PLAN - ELECTRICAL 2 OF 3
E1.03	OVERALL SITE PLAN - ELECTRICAL 3 OF 3
E1.04	PARTIAL CONCRETE DECK & TRENCH DETAIL - ELECTRICAL
E2.01	SINGLE LINE DIAGRAM
E2.02	EQUIPMENT & PANEL SCHEDULES
E2.03	ELECTRICAL RACK ELEVATION
E3.01	20' POLE DETAILS
E3.02	12' POLE DETAILS, LIGHT POLE TABLE & LUMINAIRE SCHEDULE
E3.03	LTG CONTROL SCHEMATIC & FUTURE POWER SINGLE LINE
E3.04	PARKING CANOPY PLAN - ELECTRICAL
E3.05	PARKING CANOPY SECTIONS AND DETAILS - ELECTRICAL
E4.01	FIBER CABLE RISER DIAGRAM
E4.02	EXISTING & NEW ACS RISER DIAGRAM
E4.03	CAMERA SCHISMATIC

CITY & BOROUGH OF JUNEAU DOCKS & HARBORS

REVISIONS

REV.	DATE	DESCRIPTION	DWN.	CKD.	APP.

PND ENGINEERS, INC.
9360 Glacier Highway Ste 100
Juneau, Alaska 99801
Phone: 907-586-2093
Fax: 907-586-2099
www.pndengineers.com

DESIGN: PJD CHECKED: CRS
DRAWN: PJD APPROVED: CRS
SCALE: NA
DATE: 5/23/2019

STATE OF ALASKA 49TH
Charles R. Somerville
CE-8845
REGISTERED PROFESSIONAL ENGINEER

DOWNTOWN WATERFRONT IMPROVEMENTS
PHASE I
CBJ CONTRACT NO. DH19-014

SHEET TITLE: **DRAWING INDEX**

PND PROJECT NO.: 182045 C.A.N. NO.: AECC250

G1.02

GENERAL NOTES

1. **EROSION AND POLLUTION CONTROL PLANS**

   THE CONTRACTOR SHALL DEVELOP AND SUBMIT FOR ENGINEER AND AGENCY REVIEW AND APPROVAL A STORM WATER POLLUTION PREVENTION PLAN (SWPPP). THIS PLAN SHALL INCLUDE AN EROSION AND SEDIMENT CONTROL PLAN BASED UPON THE CONTRACTOR'S SCHEDULING, EQUIPMENT AND WORK. TO THE GREATEST EXTENT POSSIBLE FOLLOW THE ALASKA DEPARTMENT OF TRANSPORTATION AND PUBLIC FACILITIES (ADOT/PF) ALASKA STORM WATER POLLUTION PREVENTION PLAN GUIDE (ASWPPPG). THE PLAN SHALL CONSIDER FIRST PREVENTING EROSION, THEN MINIMIZING AND TRAPPING SEDIMENT PRIOR TO ITS ENTERING THE WATERWAYS. THE PLAN MUST ADDRESS THE SITE-SPECIFIC CONTROLS AND MANAGEMENT FOR THE CONSTRUCTION SITE AS WELL AS ALL MATERIAL SITES, WASTE DISPOSAL SITES AND AFFECTED AREAS. THE PLAN MUST INCORPORATE ALL THE REQUIREMENTS OF THE PROJECT PERMITS. BEST MANAGEMENT PRACTICES AS LISTED IN THE ASWPPPG SHALL BE USED.

   THE CONTRACTOR SHALL PREPARE A HAZARDOUS MATERIAL CONTROL PLAN (HMCP) FOR THE HANDLING, STORAGE, CLEAN-UP AND DISPOSAL OF PETROLEUM AND OTHER HAZARDOUS SUBSTANCES. THE CONTRACTOR SHALL LIST AND GIVE LOCATIONS OF ALL HAZARDOUS MATERIALS, INCLUDING FIELD OFFICE MATERIALS, TO BE USED AND STORED ON-SITE AND THEIR ESTIMATED QUANTITIES. THE PLAN SHALL PROVIDE DETAILS FOR STORING THESE MATERIALS AS WELL AS DISPOSING WASTE PETROLEUM PRODUCTS AND OTHER HAZARDOUS MATERIALS GENERATED BY THE PROJECT.

   IDENTIFY THE LOCATIONS WHERE HAZARDOUS MATERIAL STORAGE, FUELING AND MAINTENANCE ACTIVITIES WILL TAKE PLACE. IF ON-SITE, DESCRIBE THE MAINTENANCE ACTIVITIES AND LIST ALL CONTROLS TO PREVENT THE ACCIDENTAL SPILLAGE OF OIL, PETROLEUM PRODUCTS AND OTHER HAZARDOUS MATERIALS. DETAIL PROCEDURES FOR CONTAINMENT AND CLEANUP OF HAZARDOUS SUBSTANCES INCLUDING A LIST OF THE TYPES AND QUANTITIES OF EQUIPMENT AND MATERIALS AVAILABLE ON-SITE TO BE USED.

   THE PLAN SHALL PROVIDE DETAILS FOR PREVENTION, CONTAINMENT, CLEAN-UP AND DISPOSAL OF SOIL AND WATER CONTAMINATED BY ACCIDENTAL SPILLS AND FOR UNEXPECTED CONTAMINATED SOIL AND WATER ENCOUNTERED DURING CONSTRUCTION.

2. MATCH EXISTING GRADES AT PROJECT LIMITS AND WHERE REQUIRED TO MATCH ELEVATIONS AT EXISTING ROADS.

3. ALL REMOVED MATERIALS THAT ARE NOT SUITABLE FOR REUSE ON THE PROJECT SHALL BECOME THE PROPERTY OF THE CONTRACTOR AND PROPERLY DISPOSED OF AT AN APPROVED SITE.

4. THE LOCATIONS OF EXISTING FEATURES AND UTILITIES SHOWN ON THE DRAWINGS ARE APPROXIMATE. ADDITIONAL UTILITIES MAY BE PRESENT HOWEVER ARE NOT SHOWN. THE CONTRACTOR SHALL VERIFY ALL UTILITY LOCATIONS IN THE FIELD AS NECESSARY, PRIOR TO BEGINNING WORK. THE HORIZONTAL AND VERTICAL LOCATIONS OF ALL UTILITIES ENCOUNTERED IN THE FIELD SHALL BE RECORDED ON THE CONTRACTOR'S RECORD DRAWINGS. CONTACT LOCAL UTILITY COMPANIES PRIOR TO ANY/ ALL EXCAVATIONS AT THE FOLLOWING TELEPHONE NUMBERS:

DIAL BEFORE YOU DIG!
586-1333
UNDERGROUND POWER, TELEPHONE, T.V., COMMUNICATIONS, WATER AND SEWER LINES ARE IN THE AREA. UTILITIES SHOWN HERE DO NOT SUBSTITUTE FOR FIELD LOCATES.

5. CBJ ENGINEERING STANDARD DETAILS BOOK DATED APRIL, 2011 IS MADE A PART OF THIS CONTRACT, WITH CURRENT REVISIONS AS APPLICABLE. ADOT&PF STANDARD DETAILS, LATEST VERSION, ARE MADE A PART OF THIS CONTRACT.

6. PROPERTY DISTURBED DURING CONSTRUCTION OUTSIDE OF PROJECT LIMITS SHALL BE RESTORED TO ITS PRE-CONSTRUCTION CONDITION OR BETTER AT NO ADDITIONAL COST.

7. GRADING AND ALIGNMENT OF PIPE, STRUCTURES & FINAL SURFACING ARE SUBJECT TO MINOR REVISIONS BY THE ENGINEER TO FIT SITE CONDITIONS. GRADE ALL IMPROVEMENTS WITH POSITIVE DRAINAGE AWAY FROM STRUCTURES.

8. PROPERTY LINE LOCATIONS USED IN THESE PLANS ARE DERIVED FROM RECORD PLATS AND DO NOT REPRESENT A BOUNDARY SURVEY.

LEGEND

EXISTING	THIS PROJECT	
T		TELEPHONE PEDESTAL
V		TELEVISION PEDESTAL
E		ELECTRICAL PEDESTAL
OHE$_X$		OVERHEAD ELECTRICAL
FO^U_X		BURIED FUEL LINE
E^U_X		ELECTRICAL (UNDERGROUND)
W$_X$	W$_N$	WATER
SS$_X$	SS$_N$	SANITARY SEWER
ROW		RIGHT-OF-WAY
C^U_X		COMMUNICATION (CABLE/TEL)
SD$_X$	1	STORM DRAIN
FM$_X$	FM	FORCE MAIN
	? ?	ESTIMATION OF LAYER
		PROPERTY LINE
		CROWN
X X		GEOTEXTILE FABRIC
		GUARDRAIL
		GUY WIRE ANCHOR
		SURVEY CONTROL
UP		UTILITY POLE
TMH		TELEPHONE VAULT
		BOLLARD
		CURB & GUTTER
E		ELECTRICAL TRANSFORMER
EMH		ELECTRICAL VAULT
H		ELECTRICAL HANDHOLE
		FIRE HYDRANT
	5	LAYOUT POINT
		LAYOUT RADIUS
		LUMINAIRE POLE
		TRAFFIC SIGNAL
SSMH	SSMH	SANITARY SEWER MANHOLE
SDMH	SDMH	STORM DRAIN MANHOLE
	OWS SDMH	
		STORM DRAIN INLET
		SIGN
		TREE/VEGETATION
		WATER VALVE

ABBREVIATIONS

A	
@	AT
AC	ASBESTOS CEMENT PIPE
ACP	ASPHALT CONCRETE PAVEMENT
ADA	AMERICANS WITH DISABILITIES ACT
ADJ	ADJUSTABLE
APF	ASSOCIATED PILE AND FITTING CORP.
APPROX. or APPX.	APPROXIMATE
ATS	ALASKA TIDELANDS SURVEY
AV	AIR RELEASE VALVE
B	
BCC	BEGINNING OF CURB CUT
BFV	BUTTERFLY VALVE
BLDG	BUILDING
BOP	BEGINNING OF PROJECT
BTM, BOT	BOTTOM
BTWN	BETWEEN
C	
C&G	CURB & GUTTER
CB	CATCH BASIN
CBJ	CITY & BOROUGH OF JUNEAU
CI	CAST IRON
CIP	CAST-IN-PLACE
CJ	CONTROL JOINT
℄	CENTER LINE
CLR	CLEAR
CMP	CORRUGATED METAL PIPE
CO	CLEANOUT
C.O.E.	CORPS OF ENGINEERS
COMM	COMMUNICATION
CONC.	CONCRETE
CP	COMPLETE PENETRATION
CPEP/CPP	CORRUGATED POLYETHYLENE PIPE
COR	CORNER
CSC	COUNTERSINK
CTE	CONNECT TO EXISTING
CTR	CENTER
CY	CUBIC YARD
D	
DCP	DISSIMILAR PIPE COUPLING
D/DIA	DIAMETER
DBL	DOUBLE
DEMO	DEMOLITION
DL	DEAD LOAD
DIP	DUCTILE IRON PIPE
DIM	DIMENSION
DN	DOWN
DTL	DETAIL
E	
E	EAST
EA.	EACH
EC	EDGE OF CONCRETE
ECC	END OF CURB CUT
EG	EXISTING GRADE
EJ	EXPANSION JOINT
EL/ELEV	ELEVATION
ELEL	ELECTRICAL
EOP	END OF PAVEMENT
EQ	EQUAL
EQUIP	EQUIPMENT
EST	ESTIMATE
EW	EACH WAY
EXC	EXCAVATE
EXIST	EXISTING
F	
FC	FACE OF CURB
FD	FLOOR DRAIN
FF	FINISHED FLOOR
FG	FINISHED GRADE
FH	FIRE HYDRANT, FLAT HEAD
FIN	FINISH (ED)
FM	FORCE MAIN SEWER
FND	FOUNDATION
FOC	FACE OF CURB
FT	FOOT
FTG	FOOTING
FL	FLOWLINE OR FLANGE
G	
GALV	GALVANIZED
GB	GRADE BREAK
GRD	GROUND
GRS	GALVANIZED RIGID STEEL
GV	GATE VALVE
H	
H&T	HUB & TACK
HD	HEAVY DUTY
HDG	HOT-DIPPED GALVANIZED
HDPE	HIGH DENSITY POLYETHYLENE
HORIZ	HORIZONTAL
HSE	HOUSE
HT	HEIGHT
HWY.	HIGHWAY
I	
IAW	IN ACCORDANCE WITH
ID	INSIDE DIAMETER
IE	INVERT ELEVATION
IN	INCH
IP	IRON PIPE
INCL	INCLUDE (D) (ING)
INSUL	INSULATE (D) (ION)
INV	INVERT
J	
JB	JUNCTION BOX
L	
LBS	POUNDS
LF	LINEAR FEET
LL	LIVE LOAD
LOC	LOCATION
LS	LUMP SUM
M	
MAX	MAXIMUM
M.E.	MATCH EXISTING
MECH	MECHANICAL
MFR	MANUFACTURE (R)
MH	MANHOLE
MJ	MECHANICAL JOINT
MI	MALLEABLE IRON
MIN	MINIMUM
MLLW	MEAN LOWER LOW WATER
MSF	1000 SQUARE FEET
MSE	MECHANICALLY STABILIZED EARTH
MTL	MATERIAL (S)
N	
N	NORTH
NFS	NON FROST SUSCEPTIBLE
NIC	NOT IN CONTRACT
NO	NUMBER
NTS	NOT TO SCALE
O	
OBD	OVERBURDEN
OC	ON CENTER
OD	OUTSIDE DIAMETER
OG	ORIGINAL GOUND
OHE	OVERHEAD ELECTRICAL
OS	OWNER SUPPLIED
OWS	OIL-WATER SEPARATOR
OPP	OPPSITE
P	
P	PIPE
PC	POINT OF CURVATURE, PIECE
PCC	PRECAST CONCRATE
	POINT OF COMPOUND CURVATURE
PE	POLYETHYLENE
PED	PEDESTAL
PER	PERIMETER
PERF	PERFORATE (D)
PI	POINT OF INTERSECTION
PLWD	PLYWOOD
PL	PROPERTY LINE, PLATE
POC	POINT OF CURVE
PP	POLYPROPYLENE
PRC	POINT OF REVERSE CURVATURE
PROJ	PROJECT
PRKG	PARKING
PRV	PRESSURE REDUCING VALVE
PSI	POUND PER SQUARE INCH
PT	POINT, PRESSURE TREATED, POINT OF TANGENCY
PVC	POINT OF VERTICAL CURVATURE, POLY-VINYL CHLORIDE
PVI	POINT OF VERTICAL INTERSECTION
Q	
QTY	QUANTITY
R	
RAD	RADIUS
RE	RIM ELEVATION
REF	REFERENCE
REINF	REINFORCEMENT
REQD	REQUIRED
RET	RETAINING
RO	ROUGH OPENING
ROW	RIGHT OF WAY
S	
S	SOUTH
SCHED/SCH	SCHEDULE
SD	STORM DRAIN
SDI	STORM DRAIN INLET STRUCTURE
SDO	STORM DRAIN OUTLET STRUCTURE
SDR	STANDARD DIMENSION RATIO
SF	SQUARE FOOT
SHLDR	SHOULDER
SI	STREET INTERSECTION
SPEC	SPECIFICATION (S)
SQ	SQUARE
SRB	SHOT ROCK BORROW
SSC	SANITARY SEWER CONNECTION
SS	STAINLESS STEEL, SANITARY SEWER
SDMH	STORM DRAIN MANHOLE
SSMH	SANITARY SEWER MANHOLE
STA	STATION
STD	STANDARD
STL	STEEL
STRG	STRONG
SW	SIDEWALK
SWR	SEWER
SY	SQUARE YARD
SYM	SYMMETRICAL
T	
t	THICK
T&B	TOP AND BOTTOM
T&G	TONGUE AND GROOVE
TBC	TOP BACK OF CURB
TBD	TO BE DETERMINED
TBM	TEMPORARY BENCH MARK
TD	TRENCH DRAIN
TEL	TELEPHONE
TEMP	TEMPERATURE, TEMPORARY
TH	TEST HOLE
THK	THICK
TRANS	TRANSVERSE
TV	TELEVISION
TYP	TYPICAL
U	
UAMH	UTILITY ACCESS MANHOLE
UBC	UNIFORM BUILDING CODE
UE	UNDERGROUND ELECTRIC
UMC	UNIFORM MECHANICAL CODE
UHMW	ULTRA HIGH MOLECULAR WEIGHT
UON/UNO	UNLESS OTHERWISE NOTED
UPC	UNIFORM PLUMBING CODE
V	
VB	VALVE BOX
VERT	VERTICAL
VG	VALLEY GUTTER
W	
W	WEST
W/	WITH
WD	WOOD
WELDMT	WELDMENT
WL	WATERLINE
WQU	WATER QUALITY UNIT
WV	WATER VALVE
WW	WATER WATER
WWTP	WASTE WATER TREATMENT PLANT
W/O	WITHOUT
X	
XFMR	TRANSFORMER
<PT	ANGLE POINT

CITY & BOROUGH OF JUNEAU — DOCKS & HARBORS

REVISIONS

REV.	DATE	DESCRIPTION	DWN.	CKD.	APP.

PND ENGINEERS, INC.
9360 Glacier Highway Ste 100
Juneau, Alaska 99801
Phone: 907-586-2093
Fax: 907-586-2099
www.pndengineers.com

DESIGN: CRS CHECKED: CRS
DRAWN: PJD APPROVED: CRS
SCALE: AS SHOWN

STATE OF ALASKA — 49TH — Charles R. Somerville CE-8845 — REGISTERED PROFESSIONAL ENGINEER
DATE: 5/23/2019

DOWNTOWN WATERFRONT IMPROVEMENTS PHASE I
CBJ CONTRACT NO. DH19-014

SHEET TITLE: **GENERAL NOTES LEGEND AND ABBREVIATIONS**

PND PROJECT NO.: 182045 C.A.N. NO.: AECC250

G1.03

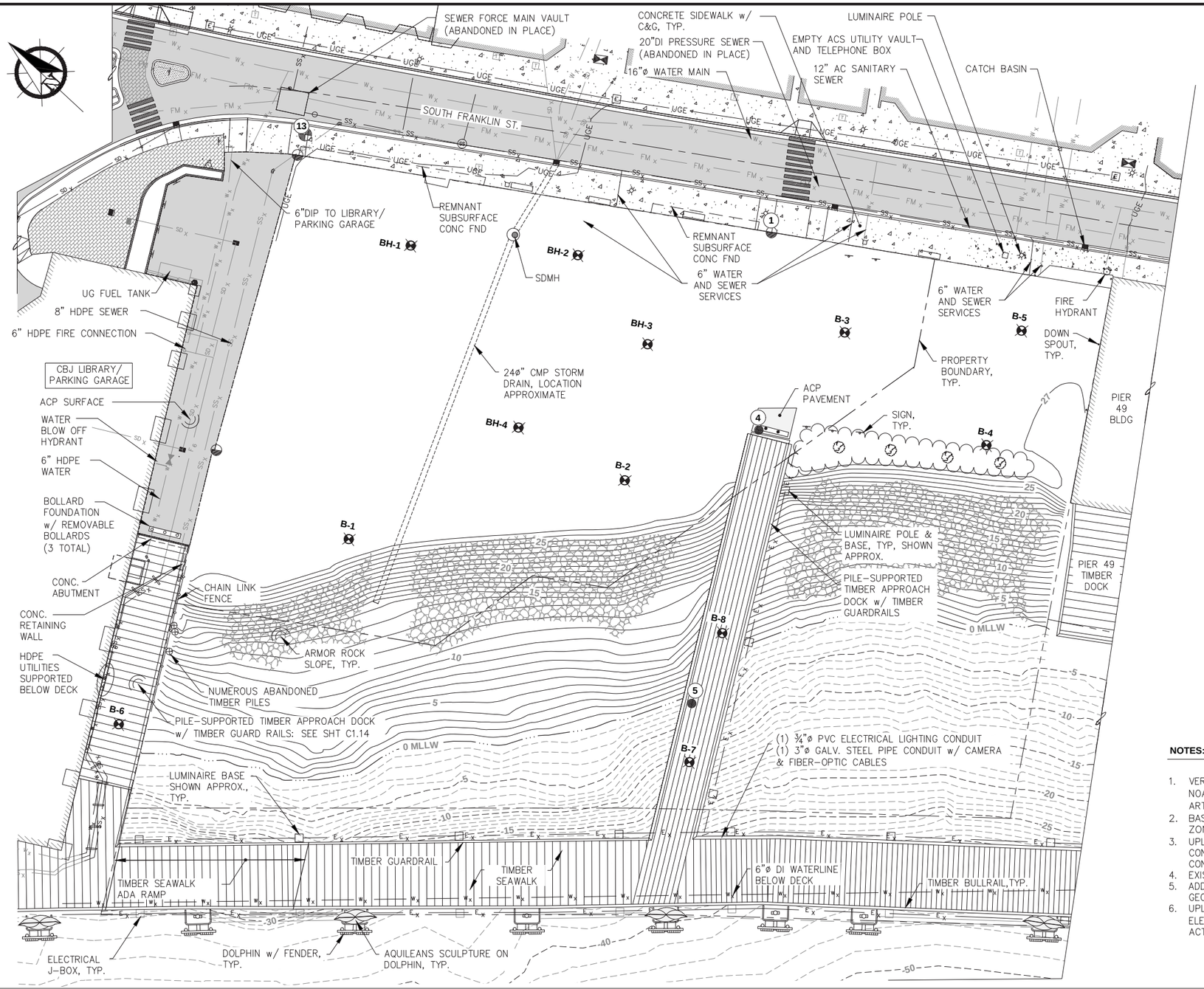

SURVEY CONTROL TABLE

POINT	NORTHING	EASTING	ELEV. (FT)	DESCRIPTION
1	2361748.24	2544358.72	27.63	FND RBR
4	2361701.84	2544298.28	27.89	PK NAIL
5	2361649.44	2544208.96	28.24	PK NAIL
13	2361898.34	2544259.15	28.26	FND MONUMENT

LEGEND

B-1 — **PND ENGINEERS, INC.: BOREHOLE, (2018)**

BH-1 — **PND ENGINEERS, INC.: BOREHOLE, (2016)**

NOTES:

1. VERTICAL DATUM IS MEAN LOWER LOW WATER (MLLW = 0 FEET) BASED ON A GPS RTK TIE TO NOAA BENCH MARK "2210 K 2011" LOCATED AT THE BASE OF A FLAGPOLE BY THE JUNEAU ARTS/CULTURE CENTER WITH A PUBLISHED ELEVATION OF 27.10' MLLW.
2. BASIS OF COORDINATES FOR THIS SURVEY ARE NAD 83 (2011) ALASKA STATE PLANE ZONE 1 IN U.S. SURVEY FEET.
3. UPLAND TOPOGRAPHY BASED UPON COMBINED FIELD SURVEYS BY PND ENGINEERS, INC. (PND) CONDUCTED IN 2017 AND 2018. BATHYMETRY BASED UPON COMBINED BATHYMETRIC SURVEYS CONDUCTED BY WILLIAMS AND ASSOCIATES, 2011 AND PND 2017.
4. EXISTING UTILITIES ARE SHOWN APPROXIMATELY BETWEEN SURVEY POINTS.
5. ADDITIONAL GEOTECHNICAL DATA IS AVAILABLE IN THE DOWNTOWN WATERFRONT IMPROVEMENTS GEOTECHNICAL REPORT, DATED APRIL 2019, PREPARED BY PND.
6. UPLANDS TOPOGRAPHIC CONTOURS UNAVAILABLE DUE TO ONGOING DEMOLITION ACTIVITIES. UPLAND ELEVATIONS TO VARY FROM +27' TO +29' MLLW FOLLOWING COMPLETION OF DEMOLITION ACTIVITIES.

CITY & BOROUGH OF JUNEAU — DOCKS & HARBORS

REVISIONS

REV.	DATE	DESCRIPTION	DWN.	CKD.	APP.

P N D ENGINEERS, INC.
9360 Glacier Highway Ste 100
Juneau, Alaska 99801
Phone: 907-586-2093
Fax: 907-586-2099
www.pndengineers.com

DESIGN: CRS CHECKED: CRS
DRAWN: PJD APPROVED: CRS
SCALE: SCALE IN FEET 0 20 40 FT.

STATE OF ALASKA 49TH — Charles R. Somerville CE-8845 — REGISTERED PROFESSIONAL ENGINEER
DATE: 5/23/2019

DOWNTOWN WATERFRONT IMPROVEMENTS PHASE I
CBJ CONTRACT NO. DH19-014

SHEET TITLE: **EXISTING CONDITIONS, SURVEY CONTROL AND BOREHOLE LOCATIONS**

PND PROJECT NO.: 182045 C.A.N. NO.: AECC250

G1.04

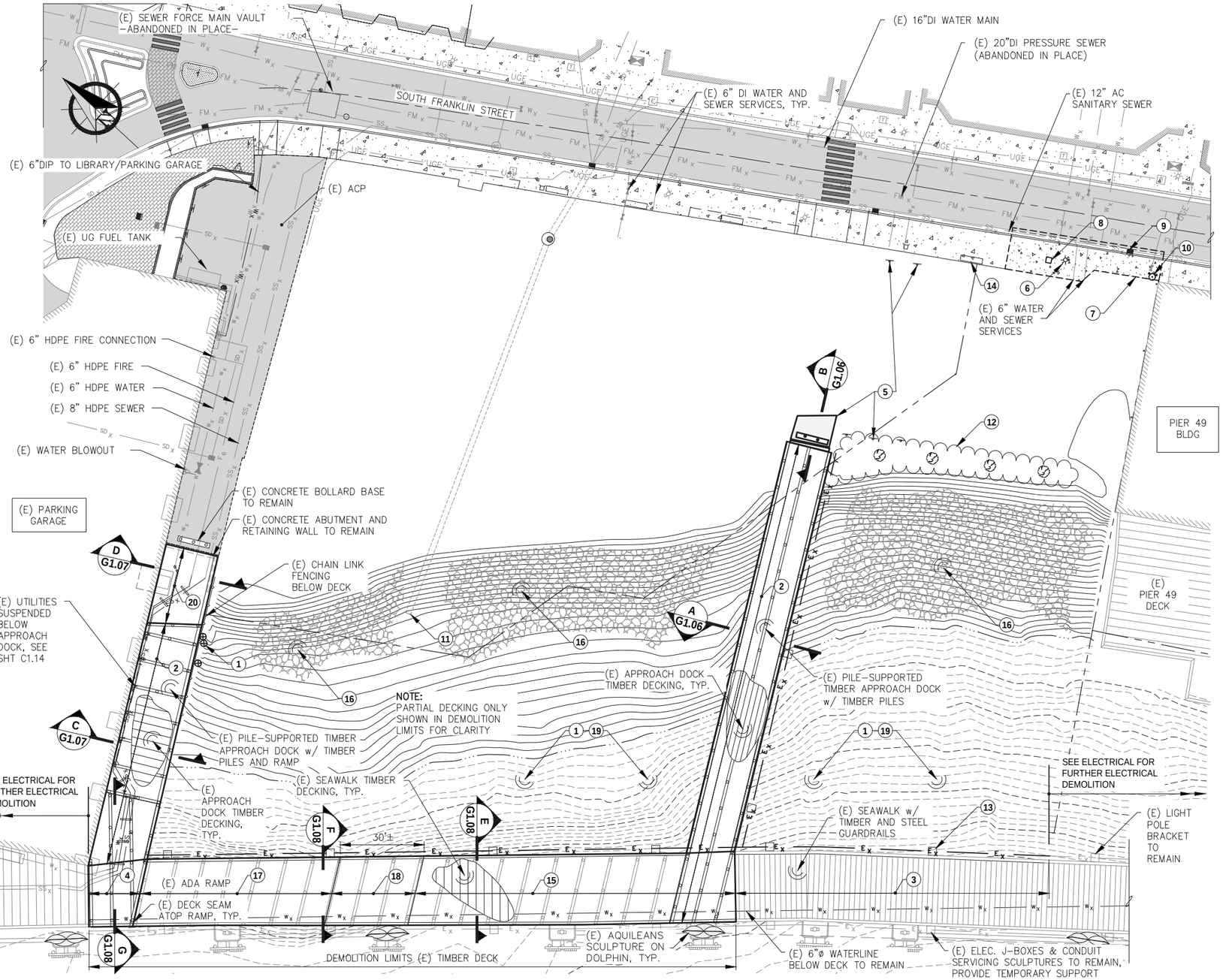

GENERAL NOTES

A	ALL DEMOLISHED TIMBER PILES, CAPS, STRINGERS, DECKING AND ASSOCIATED MATERIALS SHALL BECOME PROPERTY OF THE CONTRACTOR AND SHALL BE REMOVED FROM SITE AND DISPOSED.
B	(E) INDICATES EXISTING ENTITIES.
C	CONTRACTOR SHALL REMOVE ALL (E) PILES IN THEIR ENTIRETY BELOW NEW DOCK FRAMING LIMITS.
D	SAFETY BARRIERS SHALL BE PROVIDED ALONG (E) SEAWALK ONCE (E) GUARDRAIL IS REMOVED & SHALL REMAIN UNTIL PERMANENT IMPROVEMENTS ARE COMPLETED.
E	SEAWALK IS TO REMAIN OPEN TO PUBLIC DURING CONSTRUCTION. SHORT CLOSURES WILL BE EVALUATED ON A CASE BY CASE BASIS FOR SAFETY DURING CONSTRUCTION ACTIVITIES.

DEMOLITION SUMMARY

1	DEMOLISH ALL (E) ABANDONED TIMBER PILES & CONCRETE SECTIONS.
2	DEMOLISH (E) TIMBER DOCK INCLUDING ALL FENCING, DECKING, STRINGERS, CAPS, GUARDRAILS AND PILES; EXTRACT (E) TIMBER PILES IN THEIR ENTIRETY; TEMPORARILY SUPPORT (E) UTILITIES.
3	DEMOLISH (E) TIMBER & STEEL GUARDRAIL ALONG SHORE SIDE OF SEAWALK.
4	DEMOLISH (E) DECKING AND BULLRAIL
5	DEMOLISH (E) CONCRETE ABUTMENT & ACP; SALVAGE ALL SIGNS, BOLLARDS AND BOLLARD BASES.
6	SALVAGE (E) LUMINAIRE AND LIGHT POLE.
7	DEMOLISH (E) CONCRETE SIDEWALK, CURB AND GUTTER.
8	SALVAGE (E) ACS UTILITY VAULT – SEE ELECTRICAL PLANS.
9	DEMOLISH SD CATCH BASIN INLET FRAME AND GRATE, & SHORT SECTION OF CMP TO FIT NEW STORM DRAIN INLET FRAME & GRATE.
10	DEMOLISH (E) FIRE HYDRANT – SEE CIVIL PLANS.
11	DEMOLISH CORRODED END OF (E) CMP CULVERT TO LIMITS PER ENGINEER; MAINTAIN DRAINAGE WHILE CONSTRUCTING NEW WALL.
12	CLEAR & GRUB ALL (E) VEGETATION.
13	DEMOLISH ALL (E) SHORESIDE LUMINAIRE POLES AND LUMINAIRE BASES AND (E) ELECTRICAL CONDUITS & CONDUCTORS, SEE ELECTRICAL FOR FIBER OPTIC LINE SALVAGE.
14	SALVAGE ALL (E) BENCHES ALONG SIDEWALK (4 EA).
15	DEMOLISH (E) TIMBER DECKING, BULLRAIL, GUARDRAIL. SALVAGE ELEMENTS AS SHOWN IN DETAILS.
16	SALVAGE ALL (E) ARMOR ROCK, STOCKPILE ON–SITE AND REUSE.
17	SALVAGE (E) STRINGERS; DEMOLISH (E) DECKING, BULLRAILS & GUARDRAILS.
18	DEMOLISH (E) DECKING, STRINGERS, BULLRAILS & GUARDRAILS.
19	DEMOLISH ALL OBSTRUCTIONS WITHIN 5' OF SURFACE @ NEW PILE LOCATIONS
20	SALVAGE DECKING & STRINGERS; DEMOLISH GUARDRAIL, CAPS, FENCING AND PILES; SALVAGE ABUTMENT CONNECTION PLATES; PROVIDE TEMPORARY SUPPORT FOR (E) UTILITIES

DEMOLISH = REMOVE & DISPOSE AT CONTRACTOR PROVIDED DISPOSAL SITE.

SALVAGE = REMOVE, SAVE & SUITABLY STORE AT OWNER DESIGNATED LOCATION OR RELOCATE AS SHOWN ON PLANS. OWNER'S DESIGNATED STORAGE LOCATION SHALL BE WITHIN 5 MILES OF PROJECT SITE. CONTRACTOR SHALL BE RESPONSIBLE FOR ALL TRANSPORTING, LOADING, UNLOADING AND GENERAL HANDLING OF SALVAGED MATERIALS. STORAGE OF SALVAGED MATERIALS SHALL BE COORDINATED WITH THE OWNER AT ALL TIMES. SPECIFIC LOCATIONS FOR MATERIALS TO BE SALVAGED AND STORED SHALL BE DICTATED BY THE OWNER AND SHALL BE AT THE OWNER'S SOLE DISCRETION. THE CONTRACTOR SHALL BE RESPONSIBLE FOR ANY DAMAGE INCURRED DUE TO HIS ACTIVITIES. DAMAGED MATERIALS SHALL BE REPAIRED OR REPLACED AT NO COST TO THE OWNER.

CITY & BOROUGH OF JUNEAU DOCKS & HARBORS

REVISIONS

REV.	DATE	DESCRIPTION	DWN.	CKD.	APP.

PND ENGINEERS, INC.
9360 Glacier Highway Ste 100
Juneau, Alaska 99801
Phone: 907-586-2093
Fax: 907-586-2099
www.pndengineers.com

DESIGN: MDS CHECKED: CRS
DRAWN: PJD APPROVED: CRS
SCALE: SCALE IN FEET 0 20 40 FT.

STATE OF ALASKA 49TH Charles R. Somerville CE-8845 REGISTERED PROFESSIONAL ENGINEER
DATE: 5/23/2019

DOWNTOWN WATERFRONT IMPROVEMENTS PHASE I
CBJ CONTRACT NO. DH19-014

SHEET TITLE: **DEMOLITION SITE PLAN**

PND PROJECT NO.: 182045 C.A.N. NO.: AECC250

G1.05

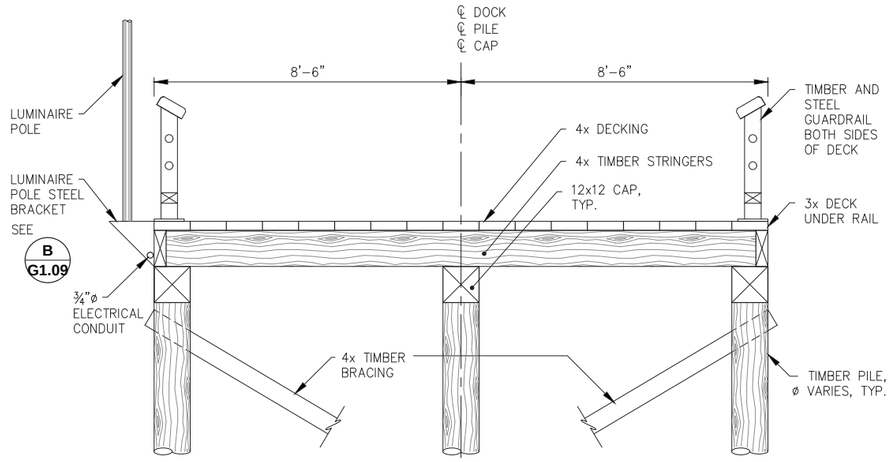

A G1.05 EXISTING APPROACH DOCK SECTION

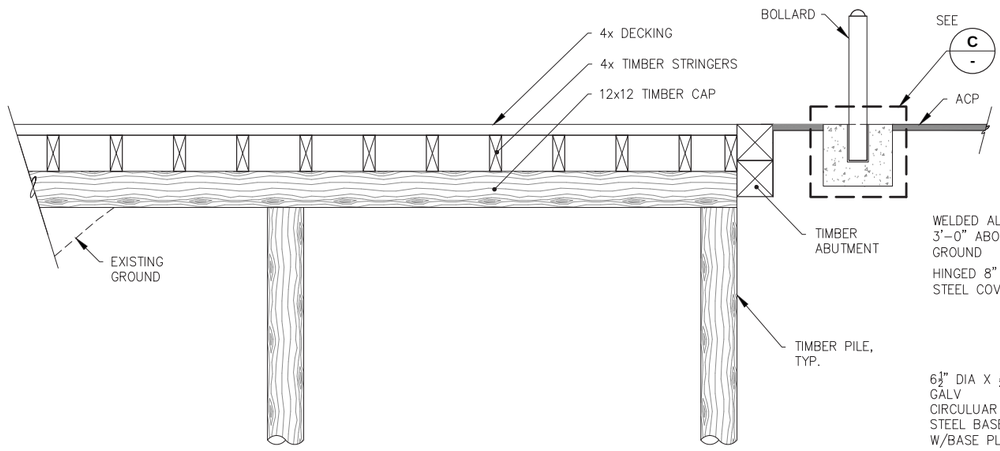

B G1.05 EXISTING APPROACH DOCK TIMBER ABUTMENT SECTION

NOTE:
GUARDRAIL, LUMINAIRE AND ELECTRICAL APPURTENANCES NOT SHOWN FOR CLARITY

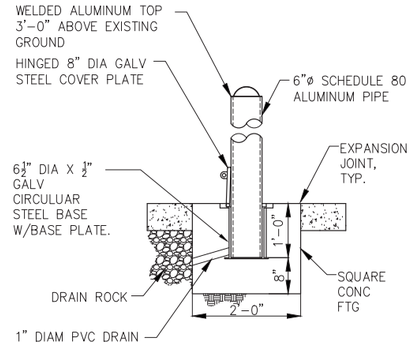

C BOLLARD BASE DETAIL

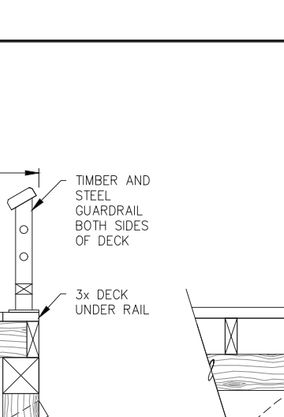

EXSTING APPROACH DOCK



EXISTING BOLLARDS AND ABUTMENT



EXISTING BOLLARDS AND APPROACH DOCK

REVISIONS

REV.	DATE	DESCRIPTION	DWN.	CKD.	APP.

P N D ENGINEERS, INC.
9360 Glacier Highway Ste 100
Juneau, Alaska 99801
Phone: 907-586-2093
Fax: 907-586-2099
www.pndengineers.com

DESIGN: MDS CHECKED: CRS
DRAWN: PJD APPROVED: CRS
SCALE: AS SHOWN
DATE: 5/23/2019

STATE OF ALASKA 49TH Charles R. Somerville CE-8845 REGISTERED PROFESSIONAL ENGINEER

DOWNTOWN WATERFRONT IMPROVEMENTS PHASE I
CBJ CONTRACT NO. DH19-014

SHEET TITLE: **DEMOLITION SECTIONS & PHOTOS**

PND PROJECT NO.: 182045 C.A.N. NO.: AECC250

G1.06

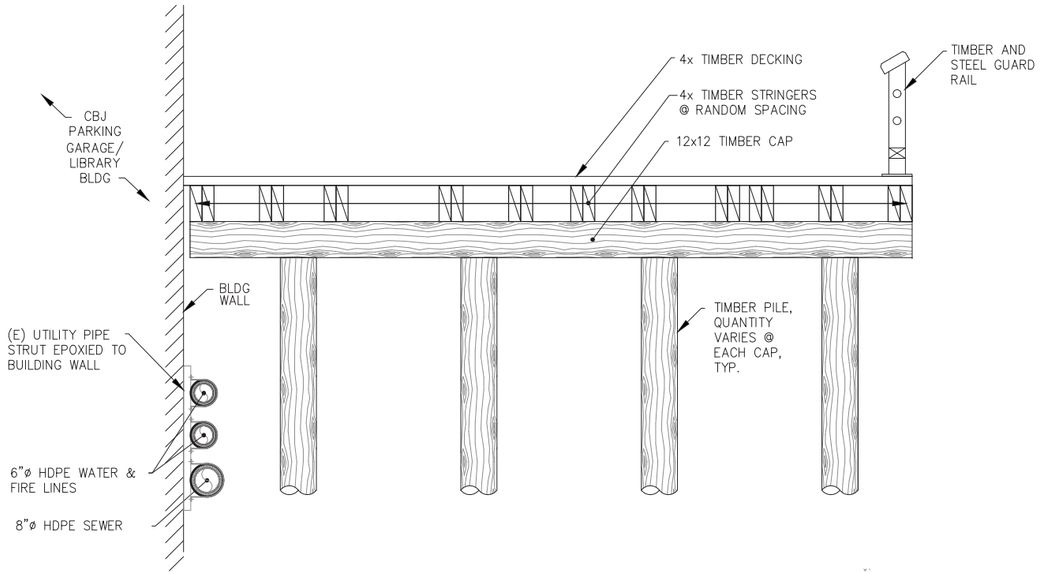

C G1.05 EXISTING APPROACH DOCK ADJACENT PARKING GARAGE SECTION

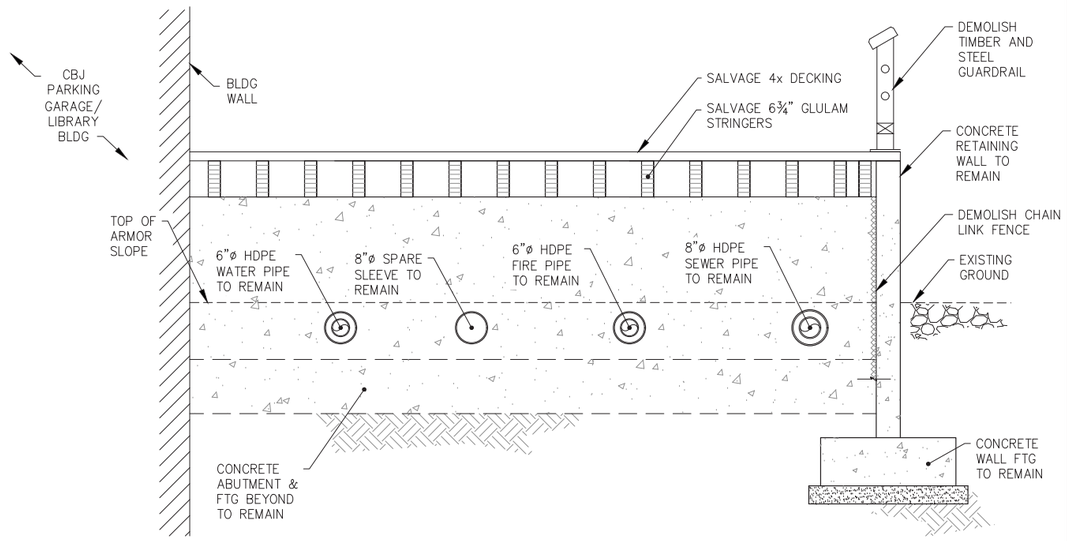

D G1.05 EXISTING APPROACH DOCK RAMP AT CONCRETE RETAINING WALL AND ABUTMENT SECTION

NOTE: STRINGERS AND CAPS ARE NOT PERPENDICULAR, AND ARE SHOWN APPROXIMATE. LOCATION, QUANTITY, SPACING AND ORIENTATION VARY THROUGHOUT STRUCTURE. DEMOLISH ALL.







EXISTING APPROACH DOCK & UTILITIES ADJACENT PARKING GARAGE

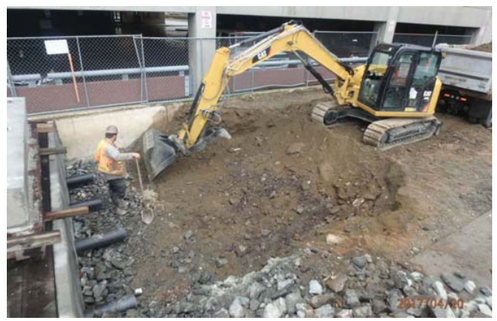



EXISTING ABUTMENT & UTILITIES ADJACENT PARKING GARAGE

NOTE: PHOTO DURING PRIOR CONSTRUCTION PROGRESS

CITY & BOROUGH OF JUNEAU DOCKS & HARBORS

REVISIONS

REV.	DATE	DESCRIPTION	DWN.	CKD.	APP.

PND ENGINEERS, INC.
9360 Glacier Highway Ste 100
Juneau, Alaska 99801
Phone: 907-586-2093
Fax: 907-586-2099
www.pndengineers.com

DESIGN: MDS CHECKED: CRS
DRAWN: PJD APPROVED: CRS
SCALE: AS SHOWN
DATE: 5/23/2019

STATE OF ALASKA 49TH Charles R. Somerville CE-8845 REGISTERED PROFESSIONAL ENGINEER

DOWNTOWN WATERFRONT IMPROVEMENTS PHASE I
CBJ CONTRACT NO. DH19-014

SHEET TITLE: **DEMOLITION SECTIONS & PHOTOS**

G1.07

PND PROJECT NO.: 182045 C.A.N. NO.: AECC250

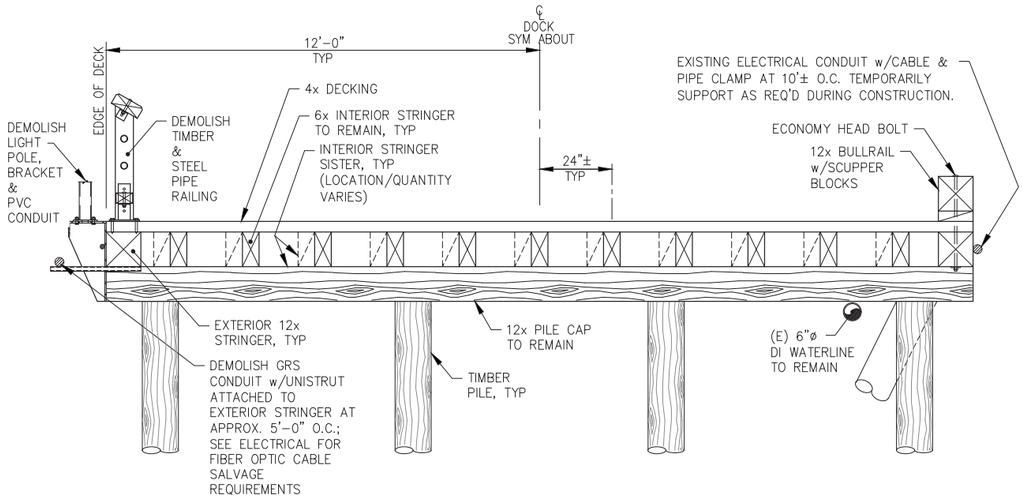

E G1.05 **SEAWALK SECTION**

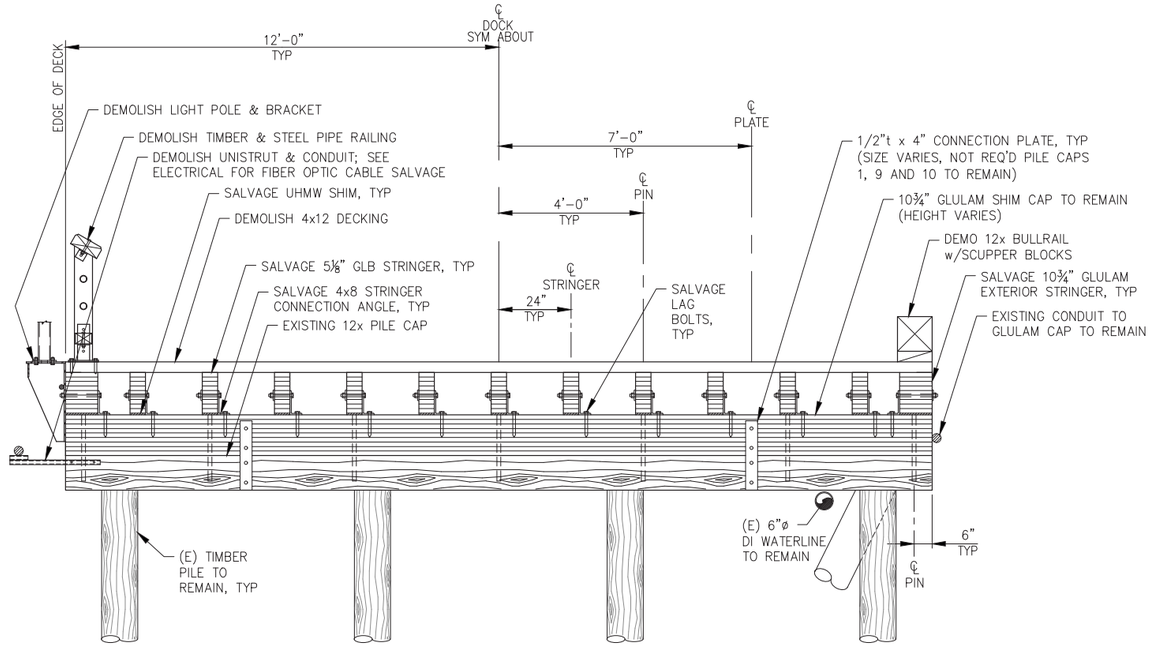

F G1.05 **SEAWALK SECTION**

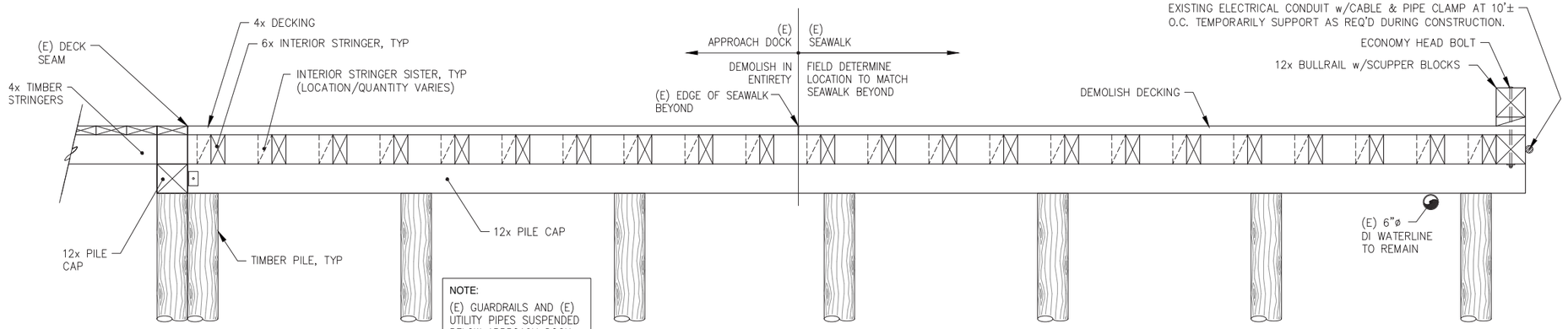

NOTE:
(E) GUARDRAILS AND (E) UTILITY PIPES SUSPENDED BELOW APPROACH DOCK DECK NOT SHOWN

G G1.05 **SEAWALK SECTION AT APPROACH DOCK**

NOTE:
(E) DOLPHIN NOT SHOWN

DOCK MODIFICATIONS SCOPE OF IMPROVEMENTS

- REMOVE EXISTING GUARDRAIL, BULLRAIL & SCUPPER BLOCKS, LIGHT POLES, BRACKETS & CONDUIT AS REQUIRED. SUPPLY NEW HARDWARE FOR REINSTALLATION AS REQUIRED.
- SALVAGE EXISTING RAMP STRINGERS
- REMOVE AND DISPOSE EXISTING DECKING AND NON-RAMP STRINGERS IN THEIR ENTIRETY INCLUDING DRIFT PINS CONNECTING STRINGERS TO PILE CAPS. FILL HOLES IN EXISTING PILE CAPS TO REMAIN w/ COAL TAR MASTIC AND PLUG HOLES w/ TREATED DOWELS.
- MINOR MODIFICATION OF EXISTING BULLRAIL MAY BE REQUIRED FOR REINSTALLATION AND TO MATCH MODIFIED SLOPE OF DOCK.
- INSTALL NEW GLULAM CAPS, DECKING, SHIMS, CONNECTION ANGLES AND SALVAGED STRINGERS. AS SHOWN.
- CONTRACTOR SHALL VERIFY ALL FINAL ELEMENTS NOT SPECIFICALLY SHOWN AS REQUIRED TO PERFORM THE WORK.

CITY & BOROUGH OF JUNEAU DOCKS & HARBORS

REVISIONS

REV.	DATE	DESCRIPTION	DWN.	CKD.	APP.

PND ENGINEERS, INC.
9360 Glacier Highway Ste 100
Juneau, Alaska 99801
Phone: 907-586-2093
Fax: 907-586-2099
www.pndengineers.com

DESIGN: MDS CHECKED: CRS
DRAWN: PJD APPROVED: CRS
SCALE: AS SHOWN

STATE OF ALASKA 49TH Charles R. Somerville CE-8845 REGISTERED PROFESSIONAL ENGINEER
DATE: 5/23/2019

DOWNTOWN WATERFRONT IMPROVEMENTS PHASE I
CBJ CONTRACT NO. DH19-014

SHEET TITLE: **DEMOLITION SECTIONS**

PND PROJECT NO.: 182045 C.A.N. NO.: AECC250

G1.08

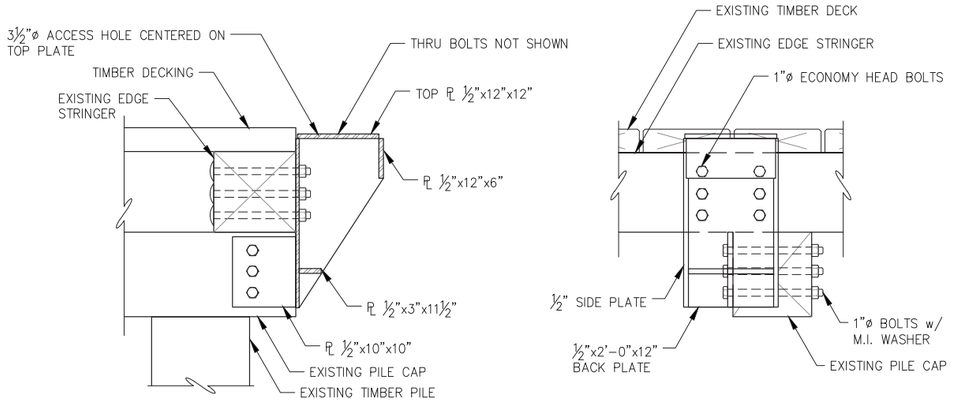

SECTION **ELEVATION**

A - EXISTING SEAWALK LIGHT POLE CONNECTION BRACKET

NOTE: GUARDRAIL & BULLRAIL NOT SHOWN FOR CLARITY.

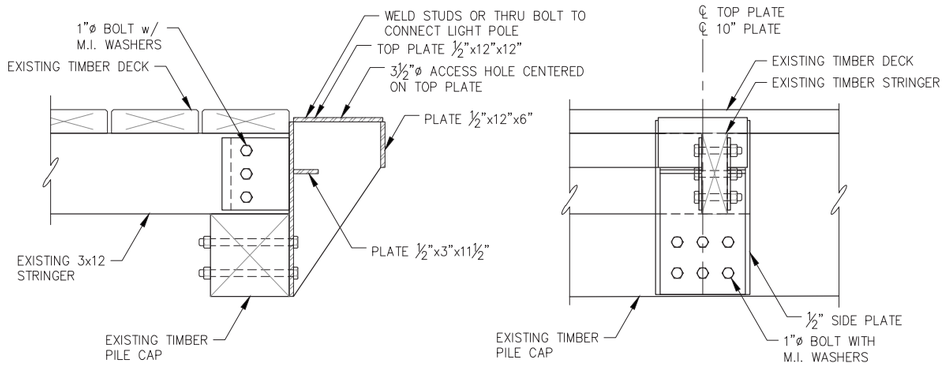

SECTION **ELEVATION**

B - TYPICAL APPROACH DOCK LIGHT POLE CONNECTION BRACKET

NOTE: GUARDRAIL NOT SHOWN FOR CLARITY

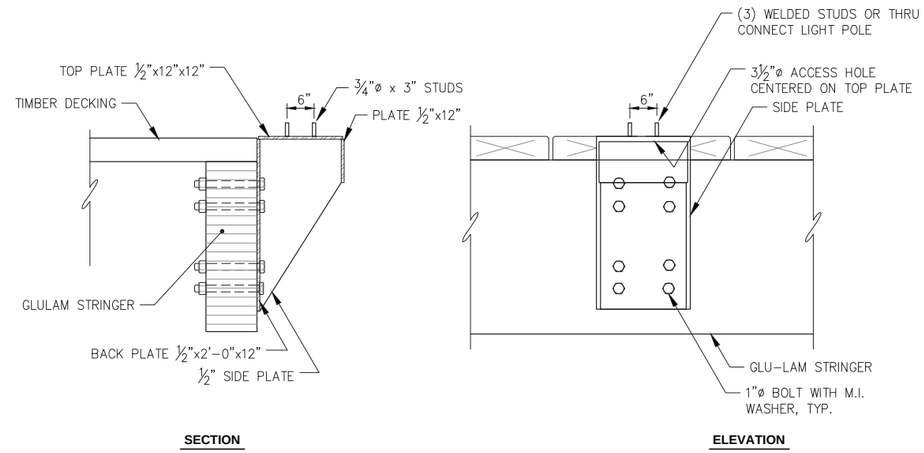

SECTION **ELEVATION**

C - EXISTING SEAWALK LIGHT POLE CONNECTION BRACKET

NOTE: GUARDRAIL & BULLRAIL NOT SHOWN FOR CLARITY.

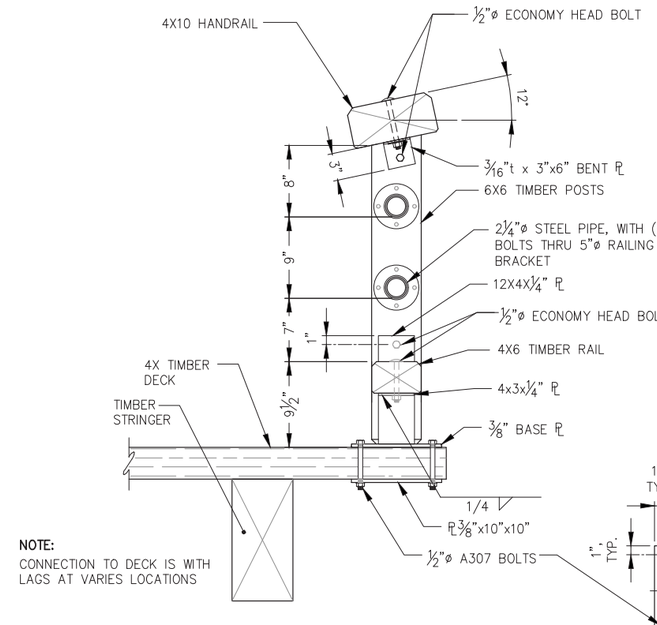

D - EXISTING GUARDRAIL DETAIL (SALVAGE)

E - BASE PLATE DETAIL

REVISIONS

REV.	DATE	DESCRIPTION	DWN.	CKD.	APP.

P N D ENGINEERS, INC.
9360 Glacier Highway Ste 100
Juneau, Alaska 99801
Phone: 907-586-2093
Fax: 907-586-2099
www.pndengineers.com

DESIGN: MDS CHECKED: CRS
DRAWN: KLL APPROVED: CRS
SCALE: AS SHOWN
DATE: 5/23/2019

STATE OF ALASKA 49TH Charles R. Somerville CE-8845 REGISTERED PROFESSIONAL ENGINEER

DOWNTOWN WATERFRONT IMPROVEMENTS PHASE I
CBJ CONTRACT NO. DH19-014

SHEET TITLE: **DEMOLITION DETAILS**

PND PROJECT NO.: 182045 C.A.N. NO.: AECC250

G1.09

(E) SEWER FORCE MAIN VAULT –ABANDONED IN PLACE–
(E) 16"DI WATER MAIN
(E) 20"DI PRESSURE SEWER –ABANDONED IN PLACE–
(E) 6" DI WATER AND SEWER SERVICES
34' WIDE DRIVEWAY CURB CUT
COMMUNICATION VAULT, SEE ELECTRICAL
(E) 12" AC SANITARY SEWER
SOUTH FRANKLIN ST
(E) 6"DIP TO LIBRARY/ PARKING GARAGE
(E) PROPERTY LINE, TYP.
REMNANT (E) SUBSURFACE CONC. FND
(E) SDMH
(E) BENCH, TYP.
MARINE VIEW WAY
(E) UG FUEL TANK
(E) 6" HDPE FIRE CONNECTION
(E) 8" HDPE SEWER
(E) ACP SURFACING, TYP.
(E) WATER BLOWOUT
(E) 6" HDPE WATER
CBJ PARKING GARAGE/ LIBRARY
(E) REMOVABLE BOLLARDS
LUMINAIRE DESIGNATION, SEE SHT C1.03 FOR LAYOUT TABLE
CONTRACTOR STAGING AREA THROUGH APRIL 1, 2020 (INSIDE PROPERTY LINES)
CONCRETE PAVING, TYP.
PROPERTY LINE
SDMH
NEW FIRE HYDRANT
PLANTER (SOILS & PLANTS **NIC**) TYP.
CONCRETE PAVING
LIFT STATION
ELECTRICAL PANELS
PIER 49 BLDG
CANOPY
CONC PLANTER (SOILS & PLANTS **NIC**)
ACCESS HATCH
(E) 24"ø CMP
APPROX. FILL LIMITS, 27.0 CONTOUR
DECK DRAIN, TYP.
ACCESS RAMP
UAMH
OWS SDMH
LUMINAIRE POLE, TYP.
TRENCH DRAIN
(E) ACP
PILE–SUPPORTED CONCRETE RETAINING WALL BELOW DECK
(E) CULVERT EXTENDED THROUGH WALL w/ 30"ø PIPE SLEEVE
BACKFILL WALL w/ CLASS A SHOT ROCK BORROW TO ELEV. 27.0'
TIMBER PLANTER (SOILS & PLANTS **NIC**) TYP.
ADA RAMP
GUARDRAIL
PROPERTY LINE, TYP.
PIER 49 TIMBER DOCK
APPROACH DOCK TIMBER RAMP (SEE S3.05)
RELOCATED APPROACH DOCK UTILITIES TO CRUISE SHIP BERTH SUSPENDED BELOW DECKING (SEE C1.15)
CONTRACTOR STAGING AREA AFTER APRIL 1, 2020
PHASE II SHELTER AND RESTROOMS BUILDING (NIC)
BLDG COL'S, TYP.
4' WIDE SWING GATE & WALKWAY
STRIPING, TYP.
VEHICLE GUARDRAIL
(E) TIMBER APPROACH DOCK
OVERDECK STAGE & STAIRWAY
RAISED SEAWALK STRINGERS & DECKING
(E) LUMINAIRE POLE BRACKET
GUARDRAIL
ADA RAMP
(E) SEAWALK WITH NEW DECKING
SEE ELECTRICAL FOR LIGHTING PLAN
(E) SEAWALK w/ NEW DECKING
RAISED SEAWALK DECKING & STRINGERS
PILE–SUPPORTED TIMBER DECK (SEE S3.01)
(E) ELEL J–BOX AND CONDUIT SERVICING AQUILEANS SCULPTURES, TYP.
PILE–SUPPORTED CONCRETE DECK (SEE S2.01)
VEHICLE GUARDRAIL w/ INFILL PANELS
AQUILEANS SCULPTURE ON DOLPHIN, TYP.
(E) DOLPHIN w/ FENDER, TYP.
SEE ELECTRICAL FOR LIGHTING PLAN

CITY & BOROUGH OF JUNEAU DOCKS & HARBORS

REVISIONS

REV.	DATE	DESCRIPTION	DWN.	CKD.	APP.

P N D ENGINEERS, INC.
9360 Glacier Highway Ste 100
Juneau, Alaska 99801
Phone: 907-586-2093
Fax: 907-586-2099
www.pndengineers.com

DESIGN: MDS CHECKED: CRS
DRAWN: PJD APPROVED: CRS
SCALE: SCALE IN FEET 0 20 40 FT.

STATE OF ALASKA 49TH Charles R. Somerville CE-8845 REGISTERED PROFESSIONAL ENGINEER
DATE: 5/23/2019

DOWNTOWN WATERFRONT IMPROVEMENTS PHASE I
CBJ CONTRACT NO. DH19-014

SHEET TITLE: **OVERALL SITE PLAN**

PND PROJECT NO.: 182045 C.A.N. NO.: AECC250

G1.10

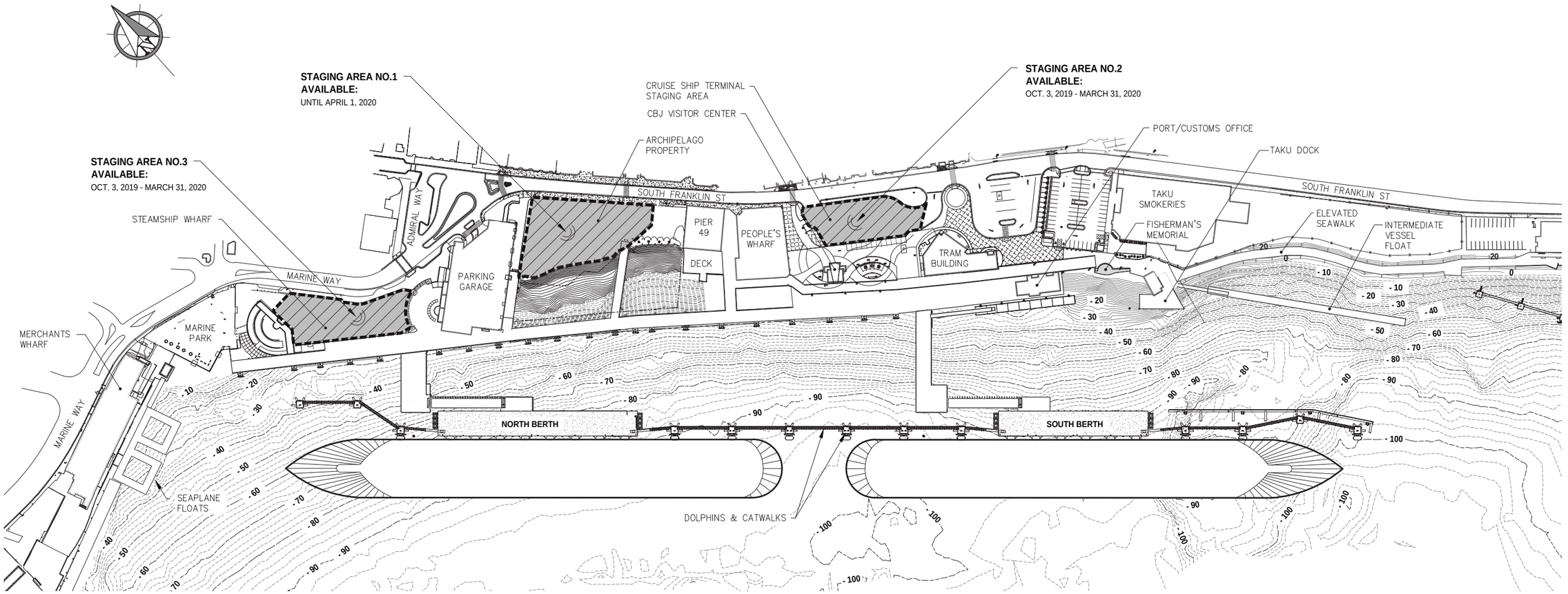

STAGING AREAS

NOTES:

1. CONTRACTOR SHALL INVENTORY EXISTING CONDITIONS WITH ENGINEER PRIOR TO USE OF ANY STAGING AREA. CONTRACTOR SHALL REPAIR ANY DAMAGES INCURRED AT STAGING AREAS DUE TO CONTRACTOR ACTIVITIES.
2. ADDITIONAL OFF-SITE STAGING AREA AVAILABLE AT "LITTLE ROCK DUMP". CONTACT PORT ENGINEER FOR DETAILS.
3. ALL OTHER STAGING AREAS SHALL BE PROVIDED BY THE CONTRACTOR.

CITY & BOROUGH OF JUNEAU — DOCKS & HARBORS

REVISIONS

REV.	DATE	DESCRIPTION	DWN.	CKD.	APP.

PND ENGINEERS, INC.
9360 Glacier Highway Ste 100
Juneau, Alaska 99801
Phone: 907-586-2093
Fax: 907-586-2099
www.pndengineers.com

DESIGN: CRS CHECKED: CRS
DRAWN: PJD APPROVED: CRS
SCALE: SCALE IN FEET 0 100 200 FT.

STATE OF ALASKA 49TH — Charles R. Somerville CE-8845 — REGISTERED PROFESSIONAL ENGINEER
DATE: 5/23/2019

DOWNTOWN WATERFRONT IMPROVEMENTS PHASE I
CBJ CONTRACT NO. DH19-014

SHEET TITLE: STAGING AREAS

PND PROJECT NO.: 182045 C.A.N. NO.: AECC250

G1.11

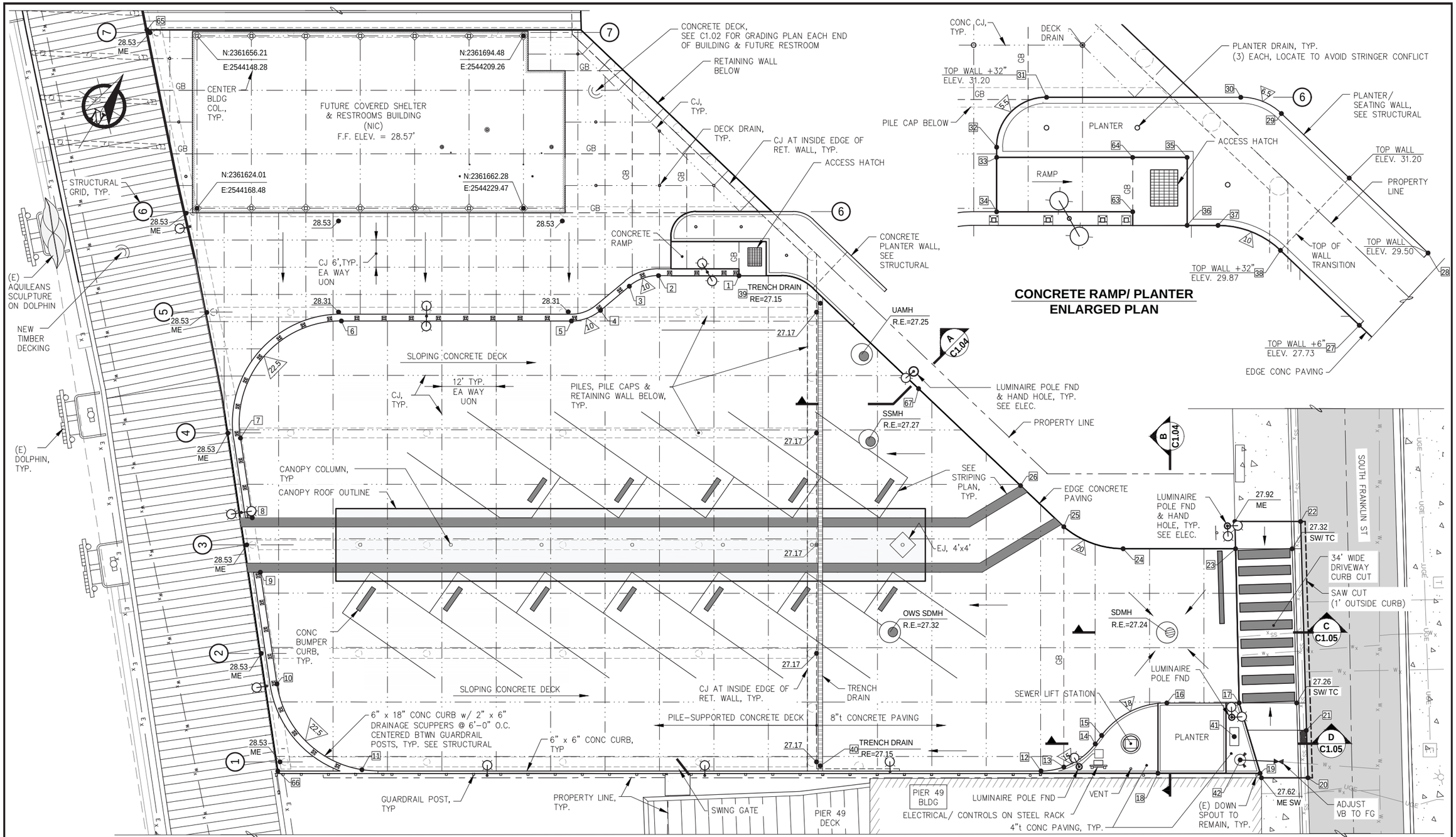

REVISIONS

REV.	DATE	DESCRIPTION	DWN.	CKD.	APP.

CITY & BOROUGH OF JUNEAU
DOCKS & HARBORS

P N D ENGINEERS, INC.
9360 Glacier Highway Ste 100
Juneau, Alaska 99801
Phone: 907-586-2093
Fax: 907-586-2099
www.pndengineers.com

DESIGN: CRS CHECKED: CRS
DRAWN: PJD APPROVED: CRS
SCALE: SCALE IN FEET 0 10 20 FT.

STATE OF ALASKA 49TH Charles R. Somerville CE-8845 REGISTERED PROFESSIONAL ENGINEER
DATE: 5/23/2019

DOWNTOWN WATERFRONT IMPROVEMENTS
PHASE I
CBJ CONTRACT NO. DH19-014

SHEET TITLE: **PARTIAL SITE PLAN**

PND PROJECT NO.: 182045 C.A.N. NO.: AECC250

C1.01

Attachment G – BLD2019-0321

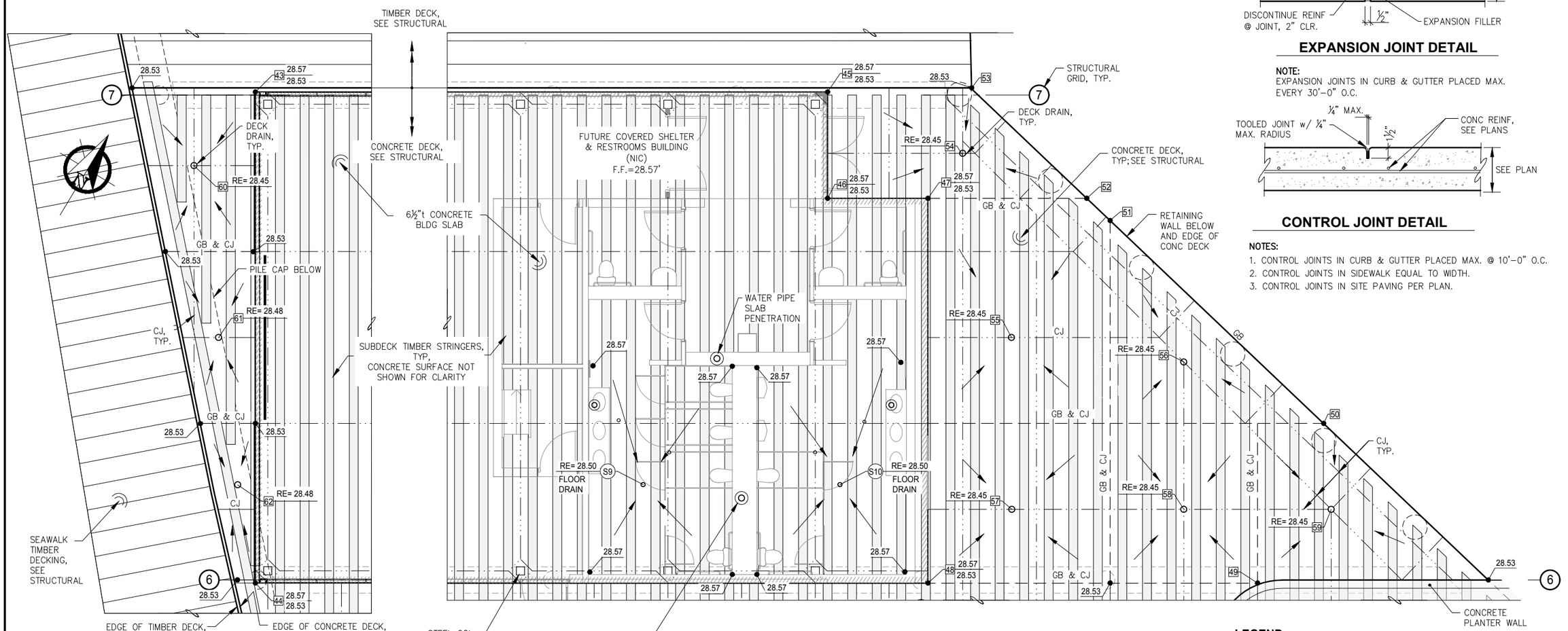

PARTIAL DECK GRADING PLAN
WEST SIDE OF BUILDING
(3) EA DECK DRAINS REQ'D.

PARTIAL DECK GRADING PLAN
EAST SIDE OF BUILDING
(6) EA DECK DRAINS REQ'D.
(2) EA FLOOR DRAINS REQ'D.

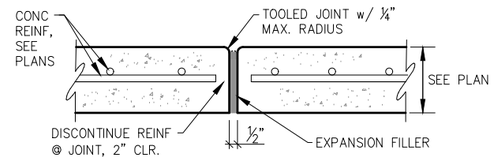

EXPANSION JOINT DETAIL

NOTE:
EXPANSION JOINTS IN CURB & GUTTER PLACED MAX. EVERY 30'-0" O.C.

CONTROL JOINT DETAIL

NOTES:
1. CONTROL JOINTS IN CURB & GUTTER PLACED MAX. @ 10'-0" O.C.
2. CONTROL JOINTS IN SIDEWALK EQUAL TO WIDTH.
3. CONTROL JOINTS IN SITE PAVING PER PLAN.

LEGEND

- # 28.57 / 28.53 — FG INTERIOR BLDG SLAB / FG EXTERIOR BLDG SLAB
- CONTROL JOINT (CJ)
- GRADE BREAK (GB)

NOTES:
1. FINISH GRADES SHOWN ARE TO THE TOP OF CONCRETE.
2. LOCATE DECK DRAINS BETWEEN TIMBER STRINGERS AS SHOWN; FIELD ADJUST PER ENGINEER.
3. SEE DECK DRAIN DETAIL w/ DOWNSPOUT ALIGNMENT TO AVOID CONFLICTS w/ BELOW DECK STRUCTURAL MEMBERS.
4. SEE ALSO WATER & SEWER PLAN FOR PIPE PENETRATION AND FLOOR DRAIN LOCATIONS.

CITY & BOROUGH OF JUNEAU — DOCKS & HARBORS

REVISIONS

REV.	DATE	DESCRIPTION	DWN.	CKD.	APP.

PND ENGINEERS, INC.
9360 Glacier Highway Ste 100
Juneau, Alaska 99801
Phone: 907-586-2093
Fax: 907-586-2099
www.pndengineers.com

DESIGN: CRS CHECKED: CRS
DRAWN: PJD APPROVED: CRS
SCALE: SCALE IN FEET 0 4 8 FT.

STATE OF ALASKA 49TH — Charles R. Somerville CE-8845 REGISTERED PROFESSIONAL ENGINEER
DATE: 5/23/2019

DOWNTOWN WATERFRONT IMPROVEMENTS PHASE I
CBJ CONTRACT NO. DH19-014

SHEET TITLE: **PARTIAL CONCRETE DECK GRADING PLANS**

C1.02

PND PROJECT NO.: 182045 C.A.N. NO.: AECC250

POINT LAYOUT TABLE

POINT	NORTHING	EASTING	ELEV. (FEET)	DESCRIPTION
1	2361674.95	2544277.63	27.35	CDE/ END WALL
2	2361665.52	2544262.59	27.53	CDE/ PT
3	2361660.12	2544258.39	27.58	CDE/ PC, CURB
4	2361652.24	2544255.84	27.66	CDE/ PT, CURB
5	2361646.84	2544251.64	27.73	CDE/ PC, CURB
6	2361619.88	2544208.66	28.25	CDE/ PT, CURB
7	2361586.19	2544203.53	-	CDE/ PC, CURB
8	2361572.69	2544215.08	-	CDE/ END CURB
9	2361563.47	2544222.96	-	CDE/ END CURB
10	2361544.56	2544239.15	-	CDE/ PT, CURB
11	2361538.49	2544265.08	-	CDE/ PC, CURB
12	2361617.85	2544392.08	27.65	EC/ PC, CURB
13	2361621.27	2544395.89	27.70	EC/ GB, CURB
14	2361629.27	2544399.05	27.62	EC/ PT, CURB
15	2361631.60	2544399.25	27.60	EC/ PC, CURB
16	2361645.30	2544407.62	27.45	EC/ PT, CURB
17	2361653.78	2544421.13	27.45	EC/ SW JOINT
18	2361631.13	2544414.20	28.10	TOP CURB, INTERSECT
19	2361643.12	2544433.30	28.10	TOP CURB, INTERSECT
20	2361647.87	2544442.76	27.08/ME	END CURB, PVMNT JOINT
21	2361656.52	2544436.89	-	END CURB TRANSITION, EDGE INLET
22	2361694.86	2544411.35	27.22/ME	END CURB TRANSITION, ACP JOINT
23	2361682.16	2544402.39	27.51	EC/ SW JOINT
24	2361668.98	2544381.38	27.50	EC/ PT
25	2361666.13	2544367.73	27.70	EC/ PC
26	2361668.74	2544354.83	27.60	EC
27	2361678.90	2544304.66	27.23	EC/ END WALL
28	2361689.68	2544306.84	29.50	TOP/ END WALL
29	2361694.11	2544284.96	-	RBC/ PT, WALL

POINT LAYOUT TABLE (CONT.)

POINT	NORTHING	EASTING	ELEV. (FEET)	DESCRIPTION
30	2361693.25	2544280.22	-	RBC/ PT WALL
31	2361681.87	2544262.08	28.53	CDE/ PT, WALL
32	2361674.29	2544260.34	-	PC, WALL
33	2361673.33	2544260.94	28.47	CDE/ COR WALL
34	2361668.25	2544264.13	28.41	CDE/ CURB JOINT
35	2361684.49	2544278.73	27.37	LANDING
36	2361678.14	2544282.71	27.29	LANDING
37	2361679.95	2544285.60	27.26	CDE/ PC, WALL
38	2361681.28	2544292.90	27.20	CDE/ PT, WALL
39	2361679.34	2544296.05	27.15	END TD GRATE
40	2361592.94	2544350.26	27.15	END TD GRATE
41	2361646.91	2544424.16	-	CENTER COMMUNICATION VAULT
42	SEE WATER & SEWER UTILITY PLAN			FIRE HYDRANT
43	2361656.52	2544146.90	-	BUILDING COR
44	2361622.64	2544168.16	-	BUILDING COR
45	2361695.85	2544209.58	-	BUILDING COR
46	2361688.51	2544214.19	-	BUILDING COR
47	2361692.85	2544221.10	-	BUILDING COR
48	2361666.31	2544237.76	-	BUILDING COR
49	2361680.57	2544260.49	28.53	CDE/ GB INTERSECTION
50	2361694.44	2544258.14	28.53	CDE/ GB INTERSECTION
51	2361699.21	2544234.63	28.53	CDE/ GB
52	2361699.73	2544232.06	28.53	CDE/ GB
53	2361702.37	2544219.34	28.53	CDE/ TDE JOINT
54	2544221.56	2361697.47	-	DD
55	2361686.87	2544232.89	-	DD
56	2361692.63	2544245.84	-	DD
57	2361675.03	2544240.36	-	DD
58	2361682.47	2544252.22	-	DD
59	2361688.84	2544262.38	-	DD
60	2361648.78	2544145.85	-	DD
61	2361637.99	2544154.99	-	DD
62	2361628.65	2544162.68	-	DD
63	2361676.22	2544276.83	27.37	BOTTOM RAMP, GB LANDING
64	2361681.30	2544273.64	27.43	BOTTOM RAMP, GB LANDING
65	2361651.47	2544138.21	28.53	CDE, COR
66	2361528.40	2544249.51	28.53	CDE, COR
67	2361674.90	2544324.41	27.40	EC

LUMINAIRE POINT LAYOUT TABLE

POINT	NORTHING	EASTING	FND TYPE	FOUNDATION DESCRIPTION
1	2361677.53	2544321.50	TYPE 6	CONCRETE FND
2	2361671.89	2544223.99	TYPE 4	CONCRETE FND
3	2361630.77	2544223.99	TYPE 4	CONCRETE FND
4	2361783.75	2544046.93	TYPE 5	STEEL BRACKET
5	LUMINAIRE LOCATIONS 5,6,7,8,9 AND 10 TO BE FIELD DETERMINED PER DIRECTION OF ENGINEER		TYPE 3	STEEL BRACKET
6			TYPE 3	STEEL BRACKET
7			TYPE 3	STEEL BRACKET
8			TYPE 3	STEEL BRACKET
9			TYPE 3	STEEL BRACKET
10			TYPE 3	STEEL BRACKET
11	2361552.09	2544289.16	TYPE 1	STEEL BRACKET
12	2361577.58	2544329.83	TYPE 1	STEEL BRACKET
13	2361600.00	2544364.00	TYPE 1 SIM	STEEL BRACKET
14	2361623.12	2544398.75	TYPE 7	CONCRETE FND
15	2361650.19	2544421.39	TYPE 7	CONCRETE FND
16	2361685.45	2544398.23	TYPE 6	CONCRETE FND

NOTES :

1. SEE ELECTRICAL FOR LUMINAIRE DETAILS.
2. SEE SHT G1.10 FOR LUMINAIRE LOCATIONS.
3. SEE SHEET S1.07, S1.08, AND C1.06 FOR FOUNDATION DETAILS
4. TYPE 2 LIGHT POLE BASES SHALL BE USED AT ALL EXISTING LIGHT POLE FOUNDATIONS THAT HAVE NEW LIGHT POLES INSTALLED, SEE ELECTRICAL FOR LOCATIONS.

POINT TABLE ABBREVIATIONS:

- CDE CONCRETE DECK ELEVATION
- COR CORNER
- DD DECK DRAIN
- EC EDGE OF CONCRETE PAVING
- FD FLOOR DRAIN
- GB GRADE BREAK
- ME MATCH EXISTING
- PC POINT OF CURVATURE
- POC POINT ON CURVE
- PT POINT OF TANGENCY
- RE RIM ELEVATION
- RBC ROADWAY BASE COURSE
- SW SIDEWALK
- TD TRENCH DRAIN
- TDE TIMBER DECK ELEVATION

NOTES:

1. TABLE ELEVATIONS AT MATCH POINTS ARE SHOWN FOR REFERENCE PURPOSES ONLY, MATCHING EXISTING SURFACES SHALL TAKE PRECEDENCE, NOTIFY ENGINEER PRIOR TO GRADING OF ANY SUBSTANTIAL DISCREPANCIES (± 0.02').
2. ELEVATIONS PROVIDED THIS SHEET FOR POINTS ADJACENT TO CURB INLETS DO NOT REFLECT LOCAL CURB DEPRESSIONS AS REQUIRED IAW CBJ STD 310. SEE STORM DRAIN PLAN.

REVISIONS

REV.	DATE	DESCRIPTION	DWN.	CKD.	APP.

PND ENGINEERS, INC.
9360 Glacier Highway Ste 100
Juneau, Alaska 99801
Phone: 907-586-2093
Fax: 907-586-2099
www.pndengineers.com

DESIGN: CRS CHECKED: CRS
DRAWN: PJD APPROVED: CRS
SCALE: SCALE IN FEET 0 10 20 FT.

STATE OF ALASKA 49TH — Charles R. Somerville CE-8845 REGISTERED PROFESSIONAL ENGINEER
DATE: 5/23/2019

DOWNTOWN WATERFRONT IMPROVEMENTS PHASE I
CBJ CONTRACT NO. DH19-014

SHEET TITLE: **POINT LAYOUT TABLES**

PND PROJECT NO.: 182045 C.A.N. NO.: AECC250

C1.03

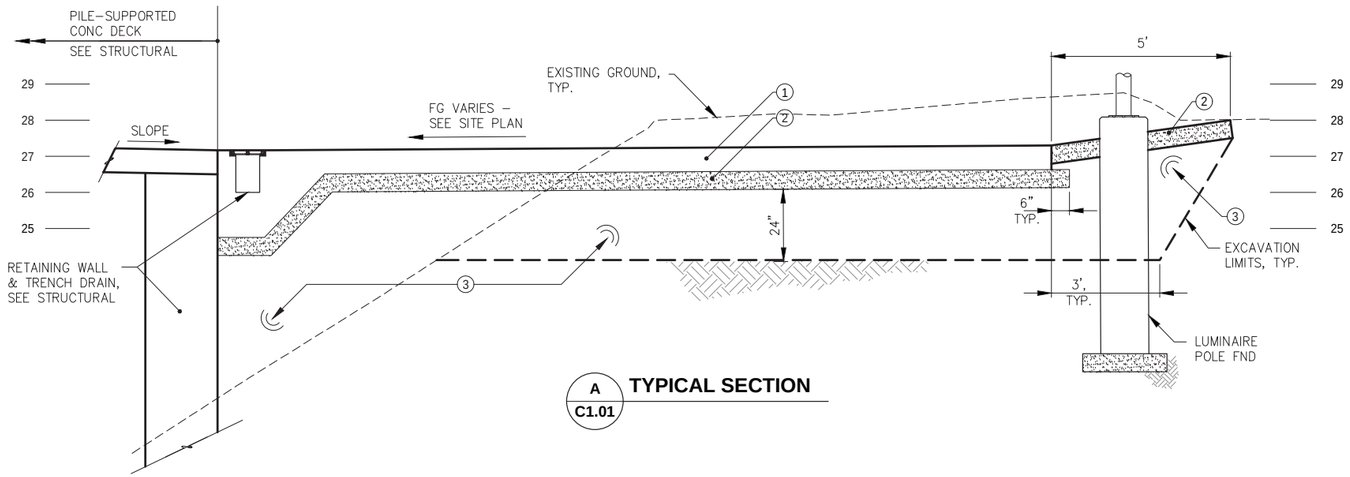

A C1.01 TYPICAL SECTION

MATERIAL SCHEDULE	
SYMBOL	MATERIAL DESCRIPTION
①	8"t CONCRETE PAVING w/ NO.7 BARS @ 12" O.C. EACH WAY
②	6"t LAYER ROADWAY BASE COURSE, OR DEPTH AS SHOWN
③	CLASS A SHOT ROCK BORROW, THICKNESS AS SHOWN
④	4"t CONCRETE PAVING w/ NO.4 BARS @ 12" O.C. EACH WAY
⑤	VERTICAL CURB PER DTL; ELEVATION VARIES, SEE SITE PLAN
⑥	STANDARD CURB & GUTTER PER DOT/PF STD. DTL I.20.20
⑦	DEPRESSED CURB & GUTTER PER DOT/PF STD. DTL I.20.20

NOTES:

1. SEE SITE PLAN FOR PROJECT LIMITS
2. SEE POINT LAYOUT FOR FINAL GRADES
3. REMOVE AND DISPOSE OF UNSUITABLE EXCAVATED MATERIAL INCLUDING ORGANICS AND OTHER WASTE WITHIN FILL PRISM & AS DIRECTED BY ENGINEER.
4. SEE SITE PLAN FOR UTILITIES & STORM DRAINS.
5. PROTECT ALL CONCRETE EDGES FROM DAMAGE DUE TO CONSTRUCTION EQUIPMENT.

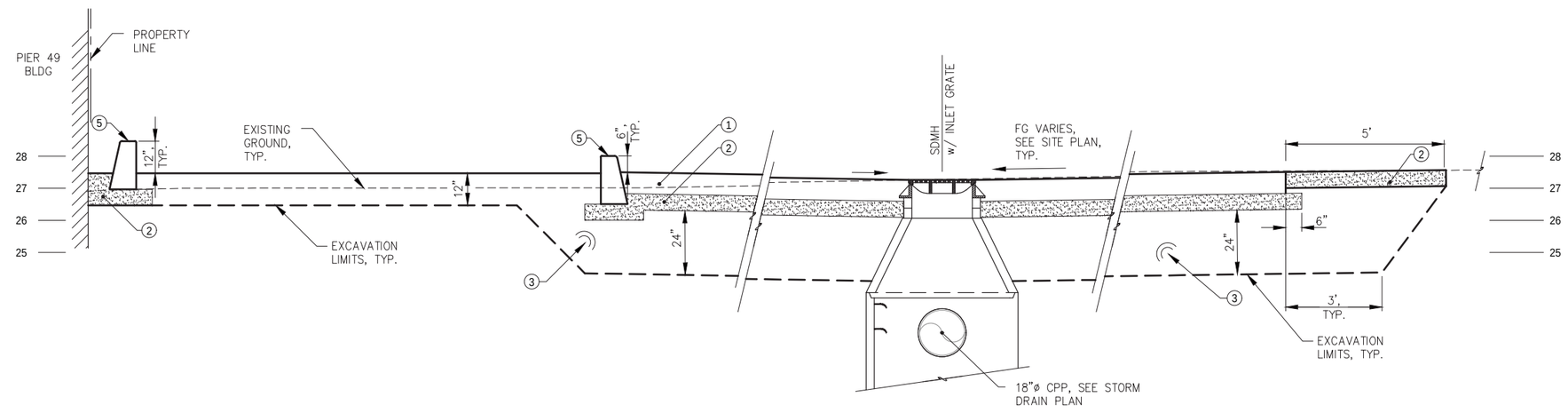

B C1.01 TYPICAL SECTION

DIAL BEFORE YOU DIG!
586-1333

UNDERGROUND POWER, TELEPHONE, T.V., COMMUNICATIONS, WATER AND SEWER LINES ARE IN THE AREA. UTILITIES SHOWN HERE DO NOT SUBSTITUTE FOR FIELD LOCATES.

CITY & BOROUGH OF JUNEAU – DOCKS & HARBORS

REVISIONS

REV.	DATE	DESCRIPTION	DWN.	CKD.	APP.

PND ENGINEERS, INC.
9360 Glacier Highway Ste 100
Juneau, Alaska 99801
Phone: 907-586-2093
Fax: 907-586-2099
www.pndengineers.com

DESIGN: CRS CHECKED: CRS
DRAWN: PJD APPROVED: CRS
SCALE: NTS
DATE: 5/23/2019

STATE OF ALASKA – 49TH – Charles R. Somerville – CE-8845 – REGISTERED PROFESSIONAL ENGINEER

DOWNTOWN WATERFRONT IMPROVEMENTS PHASE I
CBJ CONTRACT NO. DH19-014

SHEET TITLE: **TYPICAL SITE SECTIONS**

PND PROJECT NO.: 182045 C.A.N. NO.: AECC250

C1.04

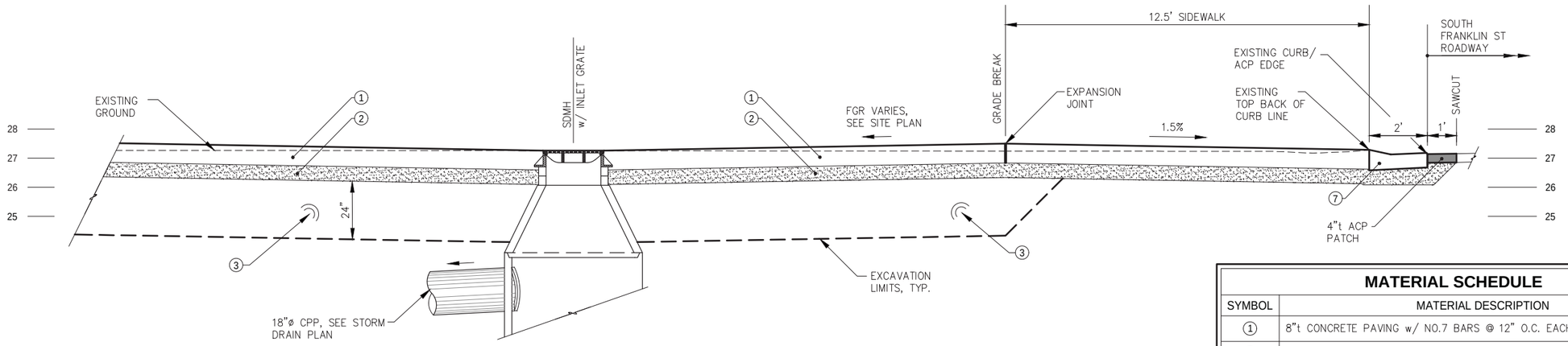

C1.01 **TYPICAL SECTION**

DIAL BEFORE YOU DIG!
586-1333

UNDERGROUND POWER, TELEPHONE, T.V., COMMUNICATIONS, WATER AND SEWER LINES ARE IN THE AREA. UTILITIES SHOWN HERE DO NOT SUBSTITUTE FOR FIELD LOCATES.

MATERIAL SCHEDULE	
SYMBOL	MATERIAL DESCRIPTION
①	8"t CONCRETE PAVING w/ NO.7 BARS @ 12" O.C. EACH WAY
②	6"t LAYER ROADWAY BASE COURSE, OR DEPTH AS SHOWN
③	CLASS A SHOT ROCK BORROW, THICKNESS AS SHOWN
④	4"t CONCRETE PAVING w/ NO.4 BARS @ 12" O.C. EACH WAY
⑤	VERTICAL CURB PER DTL; ELEVATION VARIES, SEE SITE PLAN
⑥	STANDARD CURB & GUTTER PER DOT/PF STD. DTL I.20.20
⑦	DEPRESSED CURB & GUTTER PER DOT/PF STD. DTL I.20.20

NOTES:
1. SEE SITE PLAN FOR PROJECT LIMITS
2. SEE POINT LAYOUT FOR FINAL GRADES
3. REMOVE AND DISPOSE OF UNSUITABLE EXCAVATED MATERIAL INCLUDING ORGANICS AND OTHER WASTE WITHIN FILL PRISM & AS DIRECTED BY ENGINEER.
4. SEE SITE PLAN FOR UTILITIES & STORM DRAINS.
5. PROTECT ALL CONCRETE EDGES FROM DAMAGE DUE TO CONSTRUCTION EQUIPMENT.

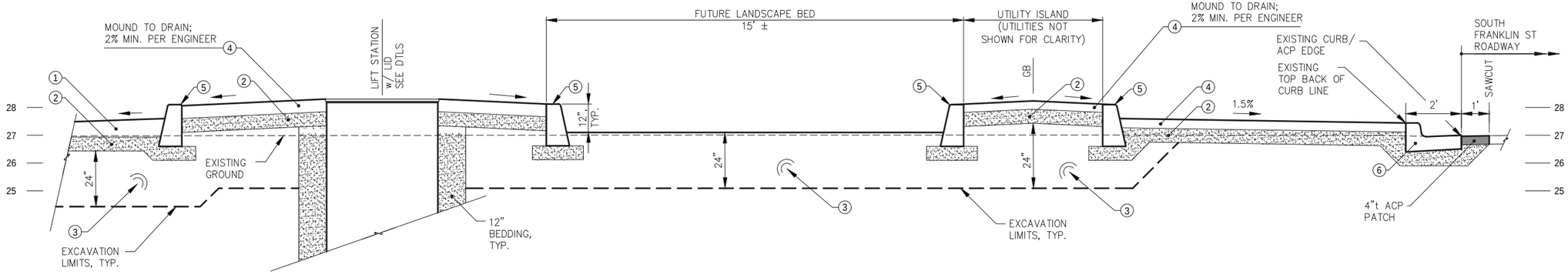

D C1.01 **TYPICAL SECTION**

REVISIONS

REV.	DATE	DESCRIPTION	DWN.	CKD.	APP.

PND ENGINEERS, INC.
9360 Glacier Highway Ste 100
Juneau, Alaska 99801
Phone: 907-586-2093
Fax: 907-586-2099
www.pndengineers.com

DESIGN: CRS CHECKED: CRS
DRAWN: PJD APPROVED: CRS
SCALE: AS SHOWN
DATE: 5/23/2019

STATE OF ALASKA 49TH Charles R. Somerville CE-8845 REGISTERED PROFESSIONAL ENGINEER

DOWNTOWN WATERFRONT IMPROVEMENTS PHASE I
CBJ CONTRACT NO. DH19-014

SHEET TITLE: **TYPICAL SITE SECTIONS**

PND PROJECT NO.: 182045 C.A.N. NO.: AECC250

C1.05

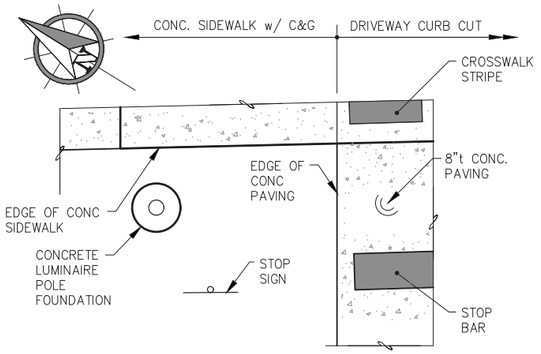

LUMINAIRE POLE PLAN AT ENTRANCE

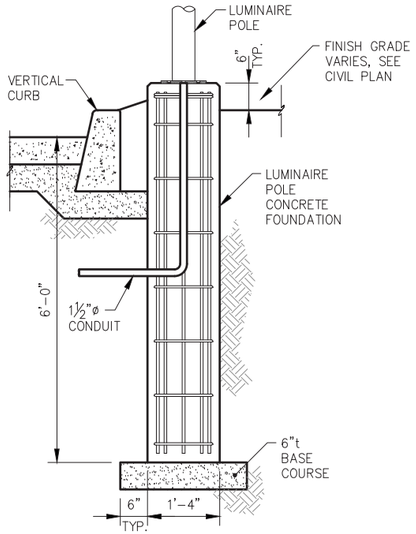

TYPICAL LUMINAIRE POLE PEDESTAL SECTION TYPE 6

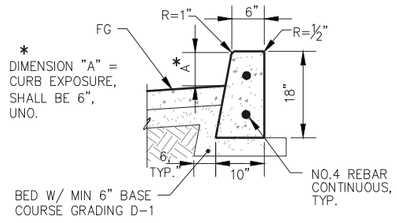

VERTICAL CURB DETAIL

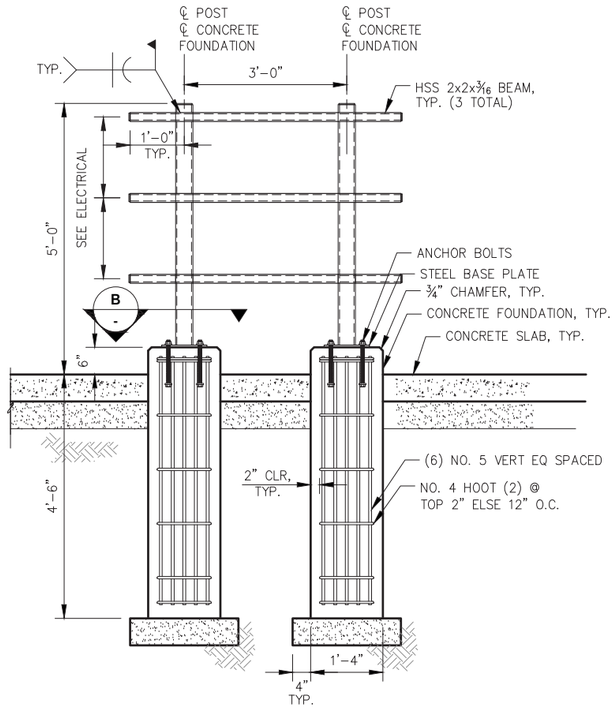

STEEL RACK FOUNDATION DETAILS

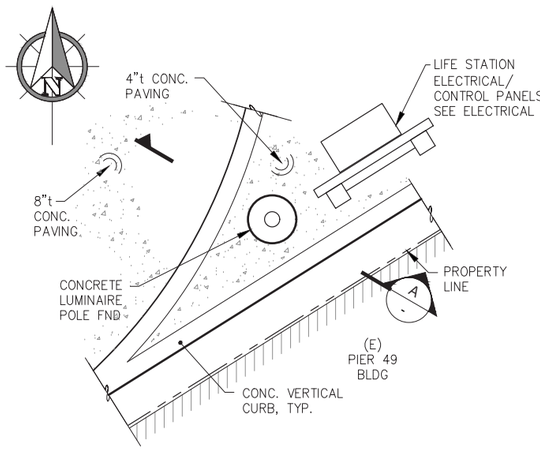

LUMINAIRE POLE PLAN AT PLANTER

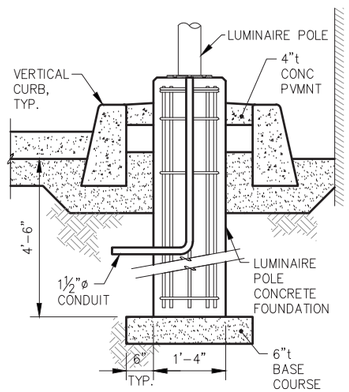

A LUMINAIRE PEDESTAL DETAIL TYPE 7

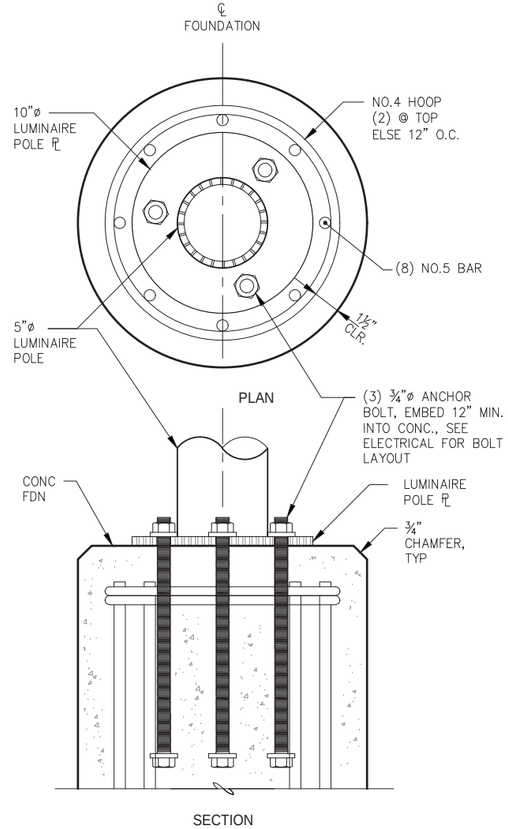

TYPICAL LUMINAIRE POLE FOUNDATION DETAILS

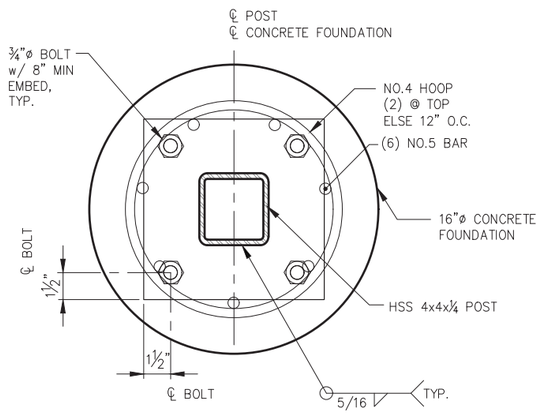

B - LUMINAIRE FOUNDATION DETAIL

NOTES:

1. SEE CIVIL SITE SECTIONS FOR DTLS NOT CALLED OUT.
2. SEE SITE GRADING PLAN FOR ELEVATIONS.
3. FOR LUMINAIRE PEDESTALS, HANDHOLDS AT EACH FOUNDATION BASE, SEE ELECTRICAL.
4. SEE LUMINAIRE FOUNDATION LAYOUT TABLE FOR COORDINATE LOCATIONS AND SIGNAGE AND STRIPING PLAN FOR SIGN COORDINATE LOCATION.

REVISIONS

REV.	DATE	DESCRIPTION	DWN.	CKD.	APP.

PND ENGINEERS, INC.
9360 Glacier Highway Ste 100
Juneau, Alaska 99801
Phone: 907-586-2093
Fax: 907-586-2099
www.pndengineers.com

DESIGN: CRS CHECKED: CRS
DRAWN: PJD APPROVED: CRS
SCALE: AS SHOWN
DATE: 5/23/2019

STATE OF ALASKA 49TH — Charles R. Somerville CE-8845 — REGISTERED PROFESSIONAL ENGINEER

DOWNTOWN WATERFRONT IMPROVEMENTS PHASE I
CBJ CONTRACT NO. DH19-014

SHEET TITLE: **CIVIL DETAILS**

PND PROJECT NO.: 182045 C.A.N. NO.: AECC250

C1.06

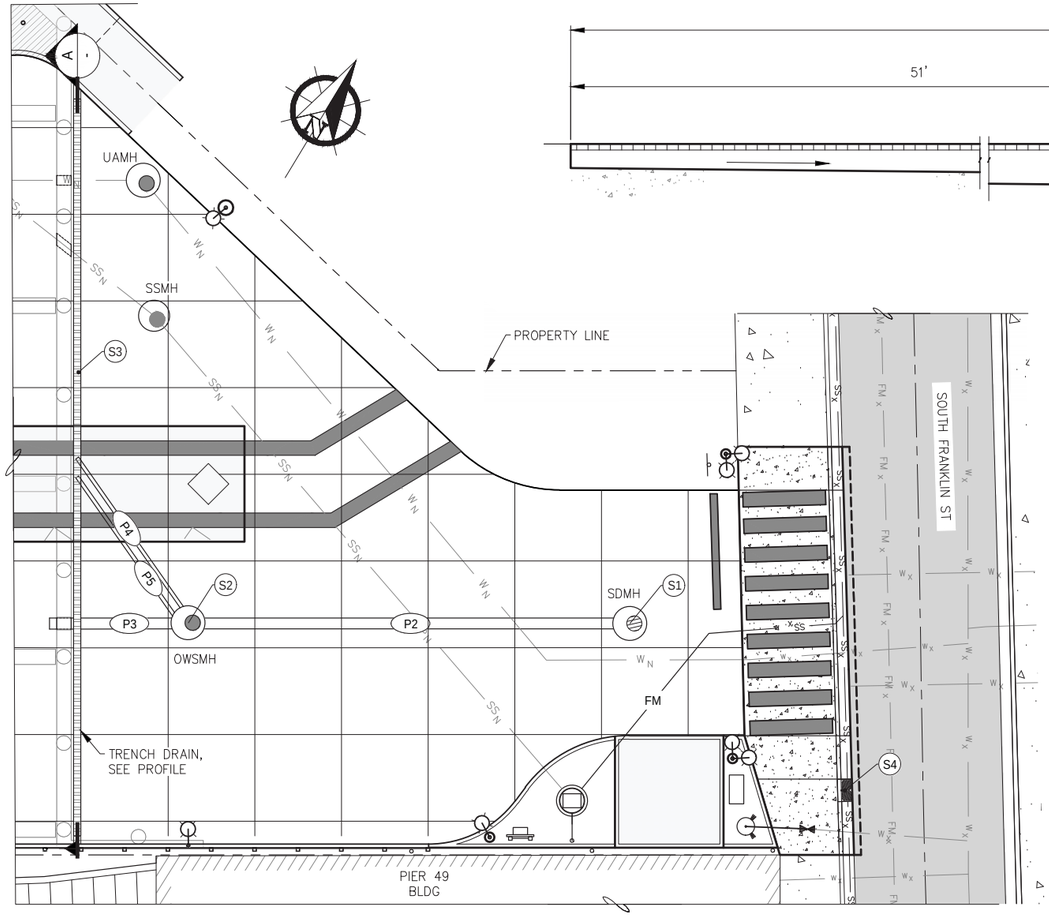

A STORM DRAIN PARTIAL PLAN

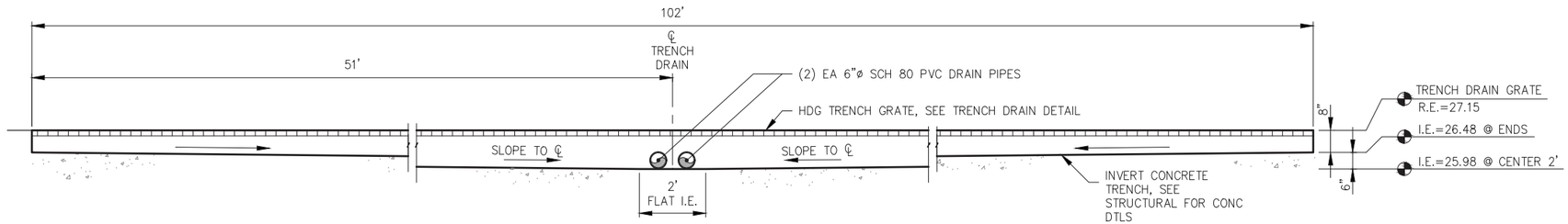

A TRENCH DRAIN PROFILE
NTS

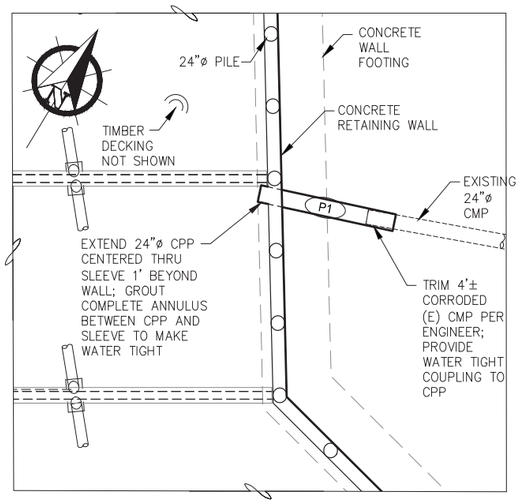

B STORM DRAIN PARTIAL PLAN

A STORM DRAIN PARTIAL PLAN

STORM DRAIN STRUCTURES

STRUCTURE DESIGNATION	NORTHING	EASTING	R.E. (FT)	DESCRIPTION
(S1)	2361658.50	2544399.45	27.24	CENTER SDMH TYPE I w/ TOP GRATE
(S2)	2361626.09	2544347.60	27.32	CENTER OWS SDMH TYPE I w/ SOLID LID
(S3)	SEE SITE PLAN C1.01		27.15	102 LF TD
(S4)	2361654.76	2544436.92	26.80 (FIELD VERIFY)	CENTER IB & CIFG PER DOT&PF STD DTLS D-26.04 & D-23.01

CIFG = CURB INLET FRAME & GRATE
IB = TYPE A INLET BOX
OWS = OIL WATER SEPARATOR
RE = RIM ELEVATION
SDMH = STORM DRAIN MANHOLE
TD = TRENCH DRAIN

STORM DRAIN PIPING

PIPE DESIGNATION	NOMINAL Ø	LENGTH (LF)	FROM	I.E. (FT)	TO	IE
(P1)	24" CPP	20'	EXIST.	15.41	DAY LITE	14.80
(P2)	18" CPP	62'	(S1)	21.75	(S2)	20.50
(P3)	18" CPP	20'	(S2)	20.40	DAY LITE	20.00
(P4)	6" PVC	28'	TD	25.98	(S2)	24.68
(P5)	6" PVC	26'	TD	25.98	(S2)	24.68

CPP = CORRUGATED POLYETHYLENE PIPE, TYPE S

CITY & BOROUGH OF JUNEAU — DOCKS & HARBORS

REVISIONS

REV.	DATE	DESCRIPTION	DWN.	CKD.	APP.

PND ENGINEERS, INC.
9360 Glacier Highway Ste 100
Juneau, Alaska 99801
Phone: 907-586-2093
Fax: 907-586-2099
www.pndengineers.com

DESIGN: CRS CHECKED: CRS
DRAWN: PJD APPROVED: CRS
SCALE: SCALE IN FEET 0 10 20 FT.

STATE OF ALASKA 49TH — Charles R. Somerville CE-8845 — REGISTERED PROFESSIONAL ENGINEER
DATE: 5/23/2019

DOWNTOWN WATERFRONT IMPROVEMENTS PHASE I
CBJ CONTRACT NO. DH19-014

SHEET TITLE: **STORM DRAIN PLAN**

PND PROJECT NO.: 182045 C.A.N. NO.: AECC250

C1.07

SEWER SERVICE LAYOUT POINTS

POINT	NORTHING	EASTING	I.E. (FT)	DESCRIPTION
S1	2361664.17	2544207.06	–	SEWER SERVICE SLAB PENETRATION, CONNECT TO S3
S2	2361677.02	2544227.54	–	SEWER SERVICE SLAB PENETRATION, CONNECT TO S3
S3	2361664.11	2544221.23	21.44	SEWER SERVICE SLAB PENETRATION w/ HDPE TEE DROP OUT
S4	2361669.25	2544229.42	21.34	ELBOW
S5	2361659.58	2544321.04	–	CENTER UTILITY ACCESS MANHOLE TYPE I w/ SOLID LID
S6	2361633.47	2544405.70	19.13	CENTER E-ONE SEWER LIFT STATION; GRAVITY SEWER I.E. IN
S7	2361663.16	2544409.42	19.56	2" HDPE ELBOW
S8	2361665.90	2544413.12	M.E.	FIELD LOCATE & CTE 6"ø DIP SEWER SERVICE IAW CBJ STD DTL 216
S9	2361660.78	2544213.87	–	FLOOR DRAIN, SEE DTL
S10	2361669.30	2544227.44	–	FLOOR DRAIN, SEE DTL

SEWER SERVICE LAYOUT POINTS (CON'T.)

POINT	NORTHING	EASTING	I.E. (FT)	DESCRIPTION
S11	2361664.16	2544209.40	–	3"x3" TEE
S12	2361664.14	2544214.28	–	3"x2" TEE
S13	2361670.44	2544224.33	–	3"x2" TEE
S14	2361674.69	2544226.40	–	3"x3" TEE

WATER SYSTEM LAYOUT POINTS

POINT	NORTHING	EASTING	I.E. (FT)	DESCRIPTION
W1	2361672.67	2544213.50	21.44	WATER SERVICE SLAB PENETRATION
W2	2361664.51	2544293.56	20.71	ELBOW
W3	2361674.68	2544309.79	20.54	CENTER UTILITY ACCESS MANHOLE TYPE I w/ SOLID LID
W4	2361648.05	2544392.35	19.15	ELBOW
W5	2361663.09	2544416.16	M.E.	FIELD LOCATE & CTE 6"ø DIP WATER SERVICE w/ SERIES 3800 RESTRAINED JOINT MEGA-COUPLING
W6	2361643.26	2544428.00	–	CENTER FIRE HYDRANT – IAW CBJ STD DTL 403

NOTE:
1. PIPE SWAY STRUTS FOR WATER AND SEWER PIPES NOT SHOWN FOR CLARITY. SEE SHT C1.12 FOR PIPE SWAY STRUT DETAILS.

NOTES:
1. MAINTAIN 5 FEET MIN. BURY ON WATER LINE.
2. MAINTAIN 10 FEET LATERAL SEPARATION DISTANCE BETWEEN WATER & SEWER LINES.
3. MAINTAIN 18 INCH VERTICAL SEPARATION DISTANCE BETWEEN WATER, SEWER SERVICE AND STORM WATER LINES.
4. NOT ALL FITTINGS & APPURTENANCES ARE SHOWN; CONTRACTOR SHALL USE INDUSTRY STANDARD PRACTICES TO ACHIEVE CONNECTIONS NOT DETAILED IN ACCORDANCE WITH THE SPECIFICATIONS CONSISTENT WITH APPLICABLE LOCAL, STATE & FEDERAL REGULATIONS PER ENGINEER DIRECTION (INCIDENTAL).
5. 1 ¼"ø AND 2"ø WASTEWATER PIPE SHALL BE HYDROSTATIC PRESSURE TESTED TO FORCE MAIN REQUIREMENTS, SEE SPECIFICATIONS)
6. SUPPORT ALL BELOW DECK PIPING WITH HANGERS AND BRACES PER DETAILS.
7. ADJUSTMENTS TO FINAL LOCATIONS PER ENGINEER APPROVAL TO FIT FIELD CONDITIONS ENCOUNTERED.
8. WHERE WATER & SEWER LINES ARE PARALLEL, ADJUST WATERLINE INVERT ELEVATION TO MATCH SEWER.

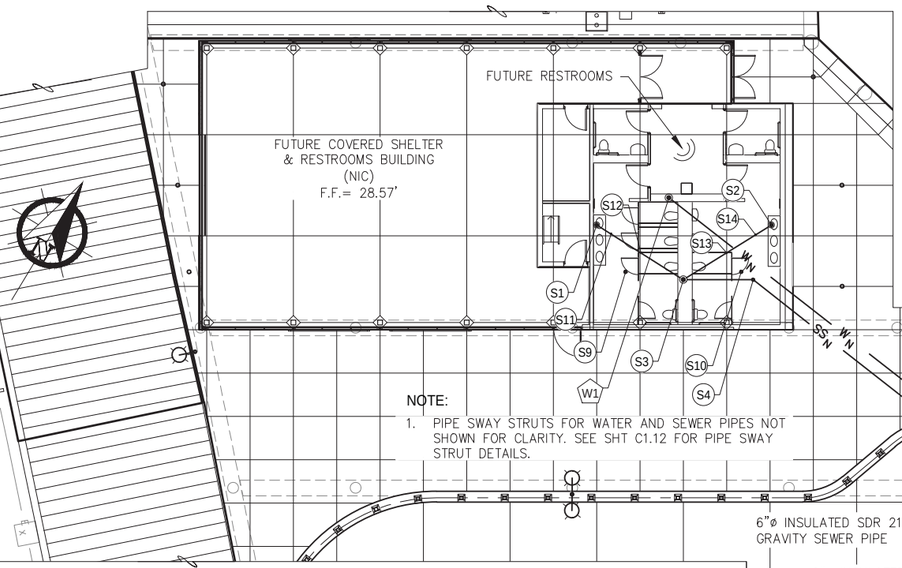

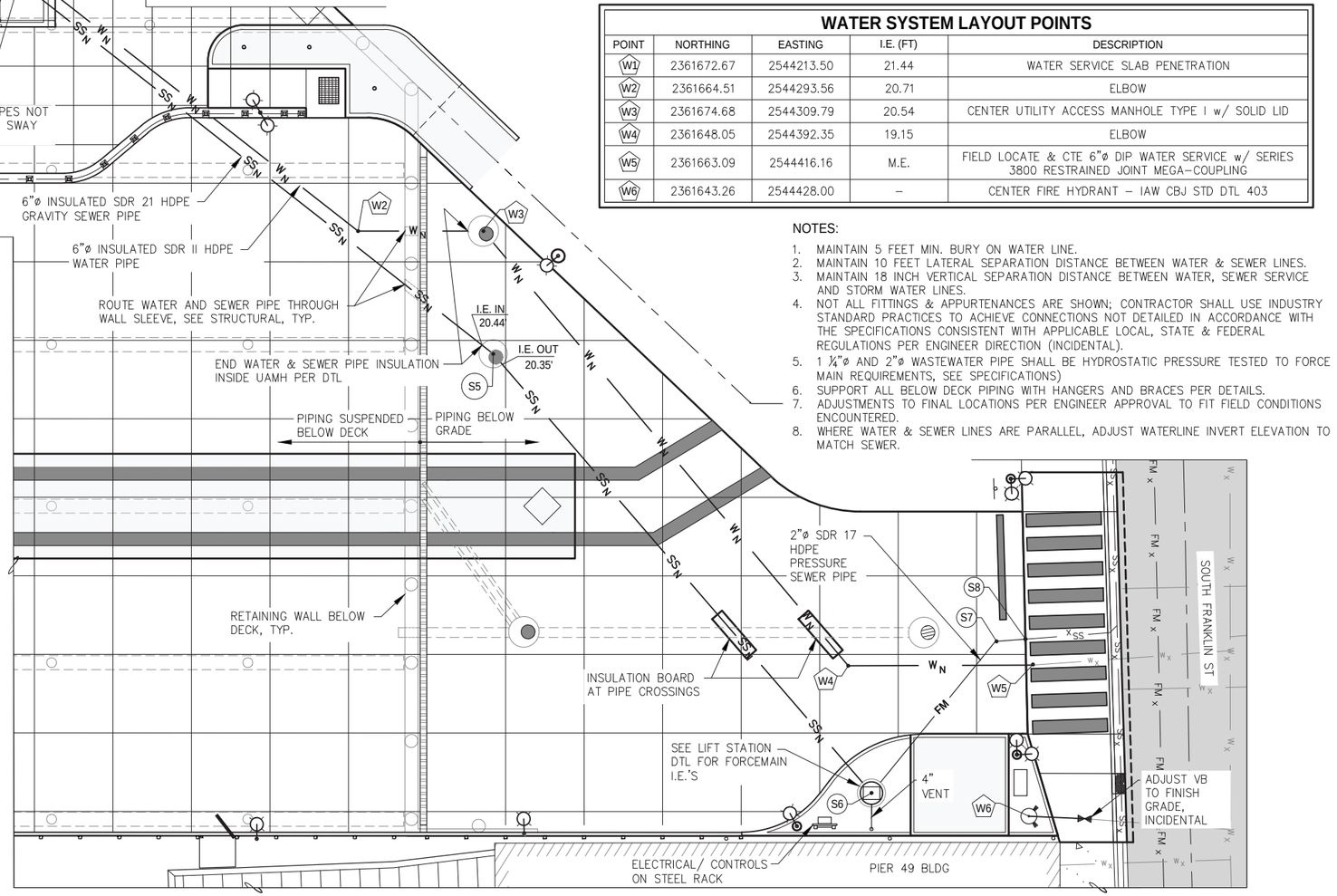

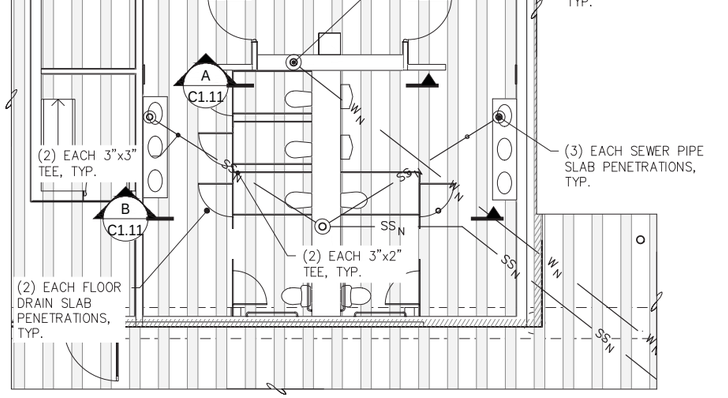

A FUTURE RESTROOM FLOOR PLAN SLAB PENETRATIONS

SCALE IN FEET
0 5 10 FT.

REVISIONS

REV.	DATE	DESCRIPTION	DWN.	CKD.	APP.

PND ENGINEERS, INC.
9360 Glacier Highway Ste 100
Juneau, Alaska 99801
Phone: 907-586-2093
Fax: 907-586-2099
www.pndengineers.com

DESIGN: BCL CHECKED: CRS
DRAWN: PJD APPROVED: CRS
SCALE: SCALE IN FEET 0 10 20 FT.
DATE: 5/23/2019

Charles R. Somerville CE-8845 REGISTERED PROFESSIONAL ENGINEER

DOWNTOWN WATERFRONT IMPROVEMENTS PHASE I
CBJ CONTRACT NO. DH19-014

SHEET TITLE: **WATER & SEWER UTILITY PLAN**

PND PROJECT NO.: 182045 C.A.N. NO.: AECC250

C1.08

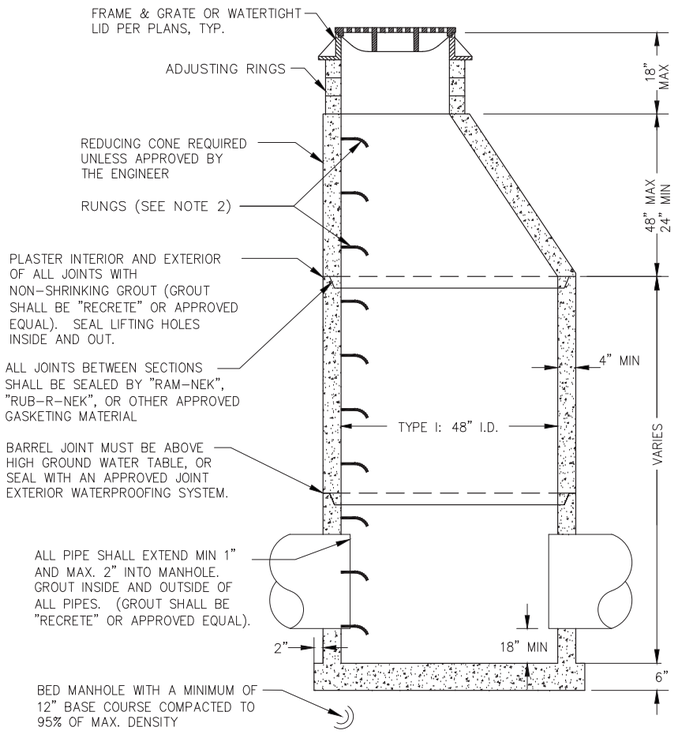

1 TYPE I STORM DRAIN MANHOLE

NOTES:
1. RUNGS PLACED 12" O.C. ON UNOBSTRUCTED SIDE OF MANHOLE. LAST RUNG 18" MAX FROM BOTTOM OF MANHOLE, AND TOP RUNG 6" MAX FROM TOP OF CONE. IF UNOBSTRUCTED SIDE NOT AVAILABLE, LAST RUNG PLACED 6" OVER SMALLEST PIPE.
2. REFER TO A.S.T.M. C-478 FOR DESIGN REQUIREMENTS AND C-478-69 FOR MINIMUM STEEL FOR BARREL. BARREL SHALL BE IMBEDDED IN BASE SO THAT FIRST BARREL SECTION IS CONNECTED WITH BASE.
3. BLOCKOUTS MUST BE FORMED.
4. CONFORM ALL OTHER ASPECTS TO CBJ STD DTL 303.

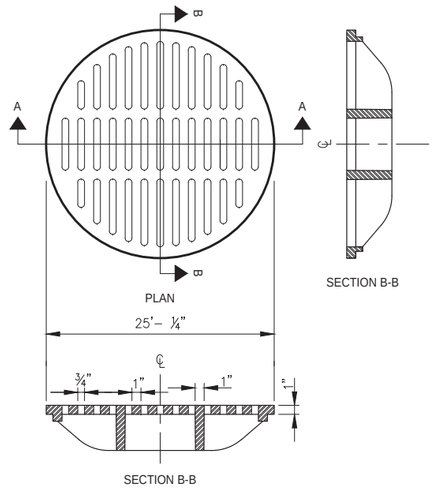

2 TOP INTAKE GRATE

SLOTTED COVER IFCO 705-G, OR EQUAL

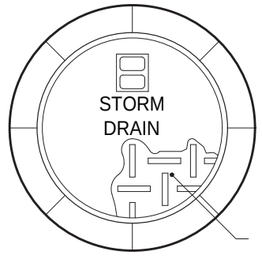

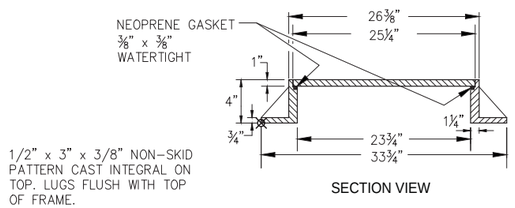

1/2" x 3" x 3/8" NON-SKID PATTERN CAST INTEGRAL ON TOP. LUGS FLUSH WITH TOP OF FRAME.

3 STORM DRAIN MANHOLE
WATERTIGHT SOLID LID AND FRAME

NOTES:
1. FRAME MUST BE MACHINED TO FIT WATERTIGHT NEOPRENE GASKET.
2. COVER SHALL BE WATER TIGHT WITH NO HOLES, SHALL HAVE THE WORD "STORM" CAST IN AND SHALL BE PROVIDED WITH AN INTEGRAL POCKET LIFT HANDLE.
3. FRAME AND COVER SHALL BE DUCTILE IRON AND SHALL CONFORM TO AASHTO M-306.
4. CONFORM ALL OTHER ASPECTS TO CBJ STD DTL 206A.

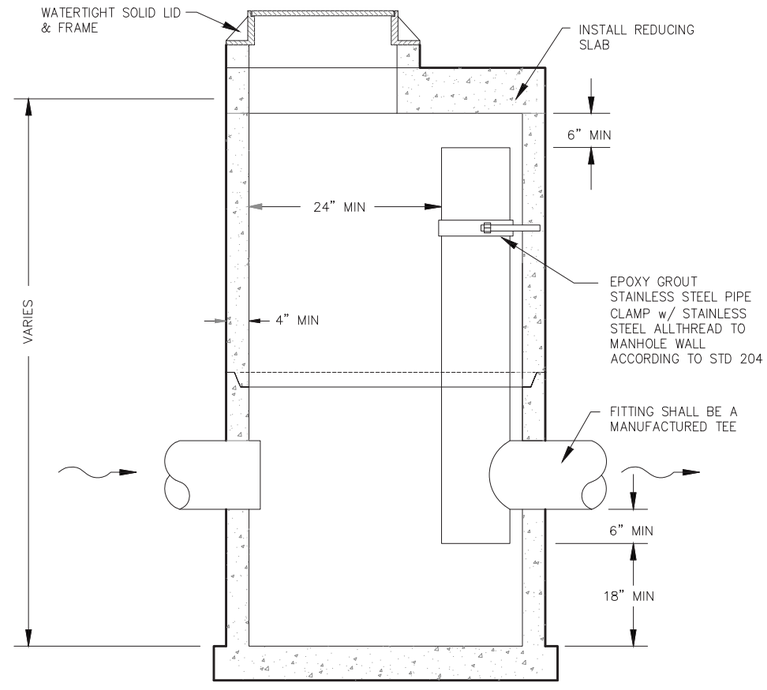

4 OIL-WATER SEPARATOR STORM DRAIN MANHOLE

NOTES:
1. ACCESS TO THE MANHOLE SHALL BE CONSTRUCTED TO ALLOW FOR MAINTENANCE AND PUMPING.
2. MANHOLE SHALL CONFORM IN ALL OTHER ASPECTS TO A TYPE I STORM DRAIN MANHOLE AS SHOWN IN CBJ STD DTL 303.
3. INLET, OUTLET, AND RISER PIPE SHALL BE THE SAME DIMENSION.

CITY & BOROUGH OF JUNEAU DOCKS & HARBORS

REVISIONS

REV.	DATE	DESCRIPTION	DWN.	CKD.	APP.

PND ENGINEERS, INC.
9360 Glacier Highway Ste 100
Juneau, Alaska 99801
Phone: 907-586-2093
Fax: 907-586-2099
www.pndengineers.com

DESIGN: BCL CHECKED: CRS
DRAWN: PJD APPROVED: CRS
SCALE: SCALE IN FEET 0 10 20 FT.

STATE OF ALASKA 49TH Charles R. Somerville CE-8845 REGISTERED PROFESSIONAL ENGINEER
DATE: 5/23/2019

DOWNTOWN WATERFRONT IMPROVEMENTS PHASE I
CBJ CONTRACT NO. DH19-014

SHEET TITLE: **STORM DRAIN DETAILS**

PND PROJECT NO.: 182045 C.A.N. NO.: AECC250

C1.09

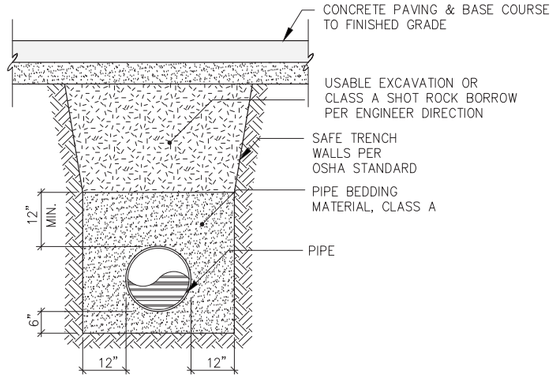

TYPICAL PIPE BEDDING SECTION

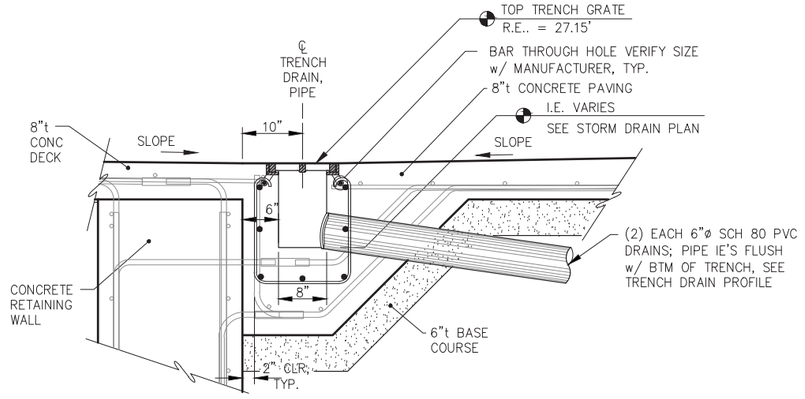

TRENCH DRAIN DETAIL

NOTES:

1. TRENCH GRATE SHALL BE EJIW V–7382–20 ADA BOLTED ASSEMBLY, OR APPROVED EQUAL, HOT–DIPPED GALVANIZED.
2. CAST 6" SCH. 80 PVC DRAIN PIPE INTO CONCRETE.

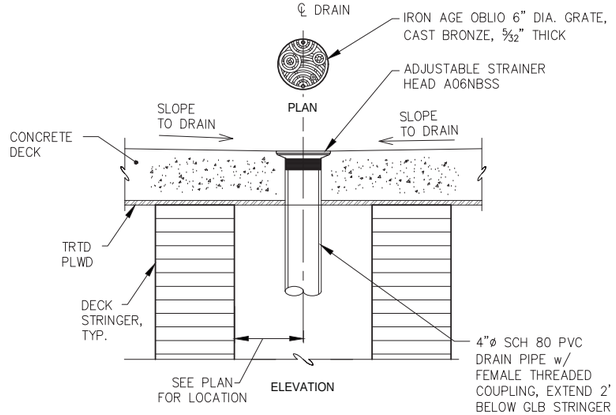

6 INCH DECK DRAIN DETAIL

NOTES:

1. OFFSET & EXTEND PVC DRAIN LINE w/ FABRICATED ELBOWS AS REQUIRED TO AVOID DRAINING ONTO STRUCTURE BELOW.
2. PLANTER DRAINS SIMILAR.

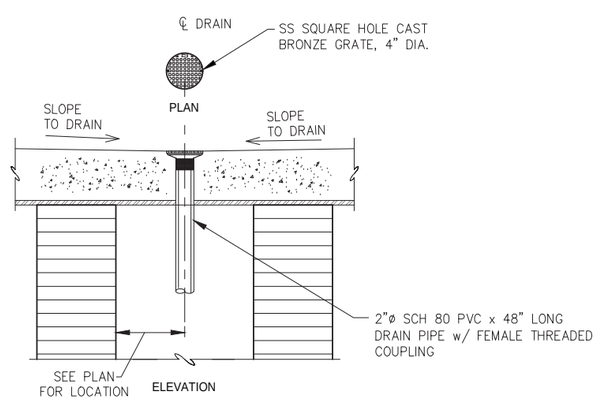

4 INCH FLOOR DRAIN DETAIL

NOTE:

DETAILS NOT SHOWN SIMILAR TO 6" DECK DRAIN.

REVISIONS

REV.	DATE	DESCRIPTION	DWN.	CKD.	APP.

PND ENGINEERS, INC.
9360 Glacier Highway Ste 100
Juneau, Alaska 99801
Phone: 907-586-2093
Fax: 907-586-2099
www.pndengineers.com

DESIGN: CRS CHECKED: CRS
DRAWN: PJD APPROVED: CRS
SCALE: SCALE IN FEET 0 10 20 FT.
DATE: 5/23/2019

STATE OF ALASKA 49TH Charles R. Somerville CE-8845 REGISTERED PROFESSIONAL ENGINEER

DOWNTOWN WATERFRONT IMPROVEMENTS PHASE I
CBJ CONTRACT NO. DH19-014

SHEET TITLE:
STORM DRAIN DETAILS

PND PROJECT NO.: 182045 C.A.N. NO.: AECC250

C1.10

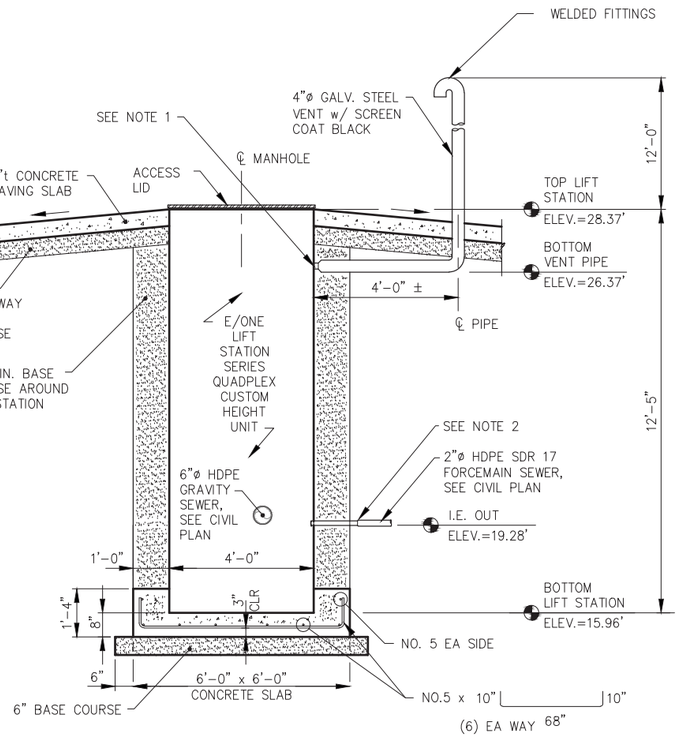

1 SEWER LIFT STATION DETAIL

NOTES:

1. ADAPT 4–INCH VENT PIPE TO 2–INCH GROMET AT WET WELL; SUBMIT CONNECTION DETAIL FOR ENGINEER APPROVAL.
2. ADAPT 1½"ø FEMALE NPT TO 2"ø HDPE PRESSURE DISCHARGE LINE OUTSIDE WET WELL; PROVIDE SUBMITTAL FOR ENGINEER APPROVAL.
3. SEE SPEC SECTION 09900 FOR VENT COATING REQUIREMENTS.

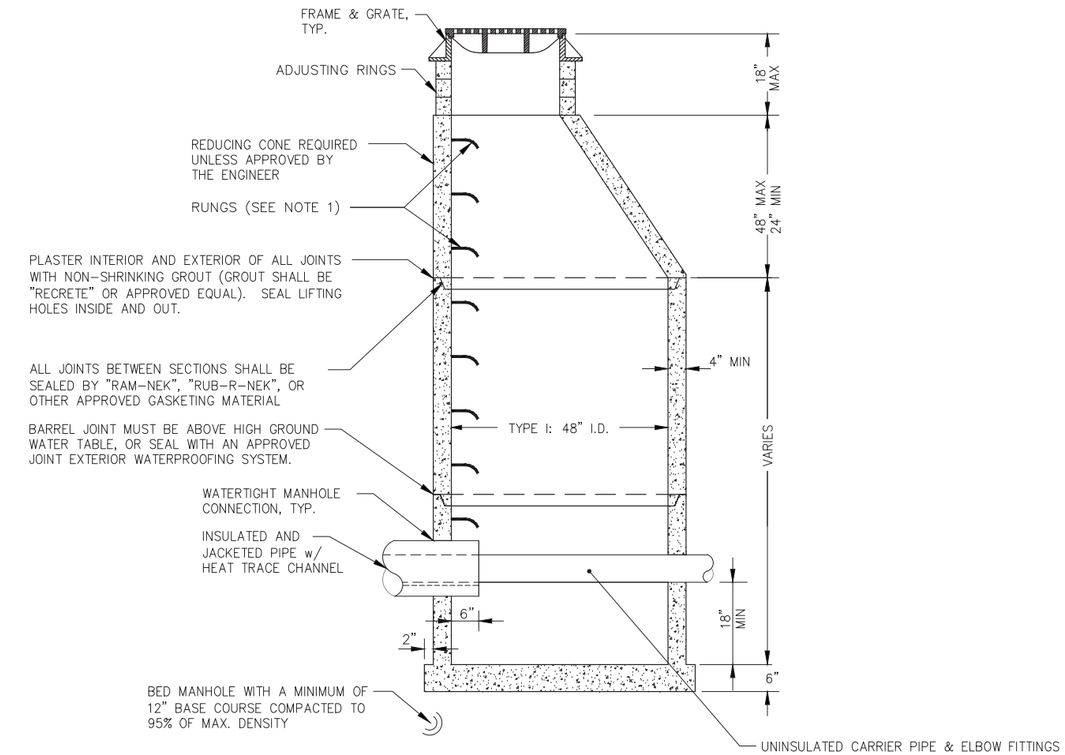

2 UTILITY ACCESS MANHOLE TYPE I

NOTES:

1. RUNGS PLACED 12" O.C. ON UNOBSTRUCTED SIDE OF MANHOLE. LAST RUNG 18" MAX FROM BOTTOM OF MANHOLE, AND TOP RUNG 6" MAX FROM TOP OF CONE. IF UNOBSTRUCTED SIDE NOT AVAILABLE, LAST RUNG PLACED 6" OVER SMALLEST PIPE.
2. REFER TO A.S.T.M. C–478 FOR DESIGN REQUIREMENTS AND C–478–69 FOR MINIMUM STEEL FOR BARREL. BARREL SHALL BE IMBEDDED IN BASE SO THAT FIRST BARREL SECTION IS CONNECTED WITH BASE.
3. BLOCKOUTS MUST BE FORMED.
4. WATERTIGHT CONNECTION DETAIL PER CBJ STD DTL 209.
5. HEAT TRACE INSULATION SHALL BE TERMINATED AND SEALED WATERTIGHT PRIOR TO THE PIPE FITTINGS WITHIN THE MANHOLE; PROVIDE OPEN ACCESS TO HEAT TRACE CHANNEL.

CITY & BOROUGH OF JUNEAU DOCKS & HARBORS

REVISIONS

REV.	DATE	DESCRIPTION	DWN.	CKD.	APP.

PND ENGINEERS, INC.
9360 Glacier Highway Ste 100
Juneau, Alaska 99801
Phone: 907-586-2093
Fax: 907-586-2099
www.pndengineers.com

DESIGN: BCL CHECKED: CRS
DRAWN: PJD APPROVED: CRS
SCALE: SCALE IN FEET 0 10 20 FT.

STATE OF ALASKA 49TH Charles R. Somerville CE-8845 REGISTERED PROFESSIONAL ENGINEER
DATE: 5/23/2019

DOWNTOWN WATERFRONT IMPROVEMENTS PHASE I
CBJ CONTRACT NO. DH19-014

SHEET TITLE: **WATER & SEWER DETAILS**

PND PROJECT NO.: 182045 C.A.N. NO.: AECC250

C1.11

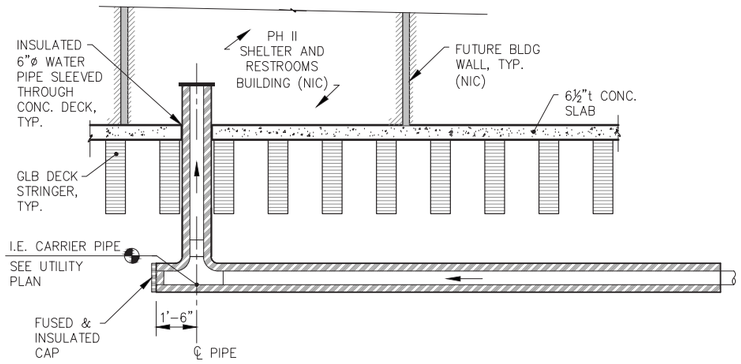

A C1.08 **WATER T-CONNECTION DETAIL**

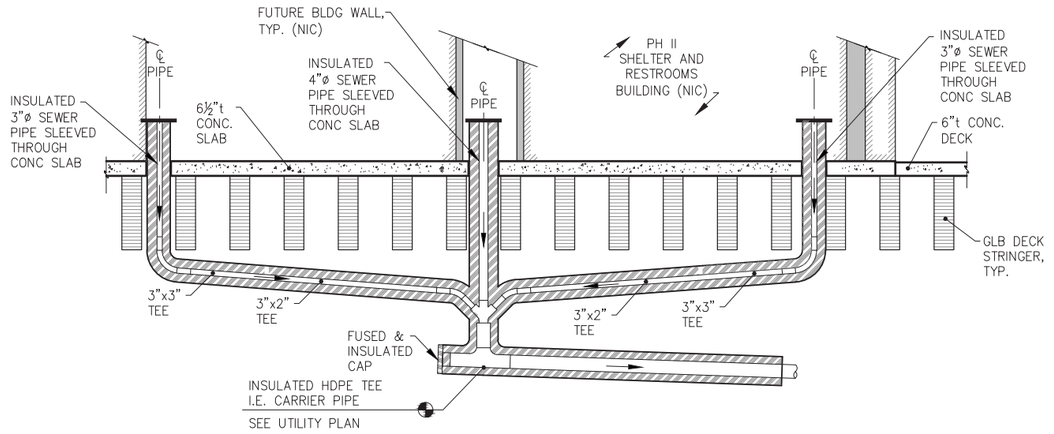

B C1.08 **SEWER WYE - CONNECTOR DETAIL**

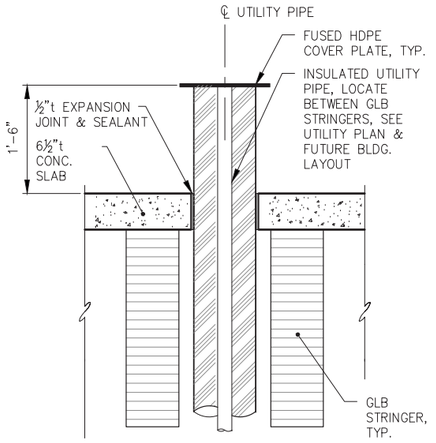

1 **TYPICAL UTILITY SERVICE SLAB PENETRATION DETAIL**

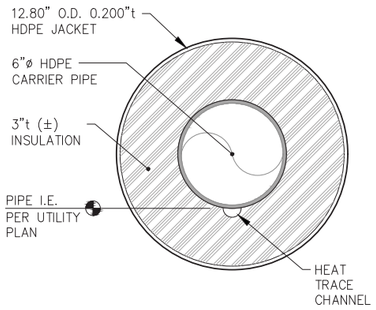

6"Ø INSULATED PIPE DETAIL

NOTE:
2"ø AND 4"ø SEWER PIPES ARE SIMILAR BUT DIFFERENT DIMENSIONS

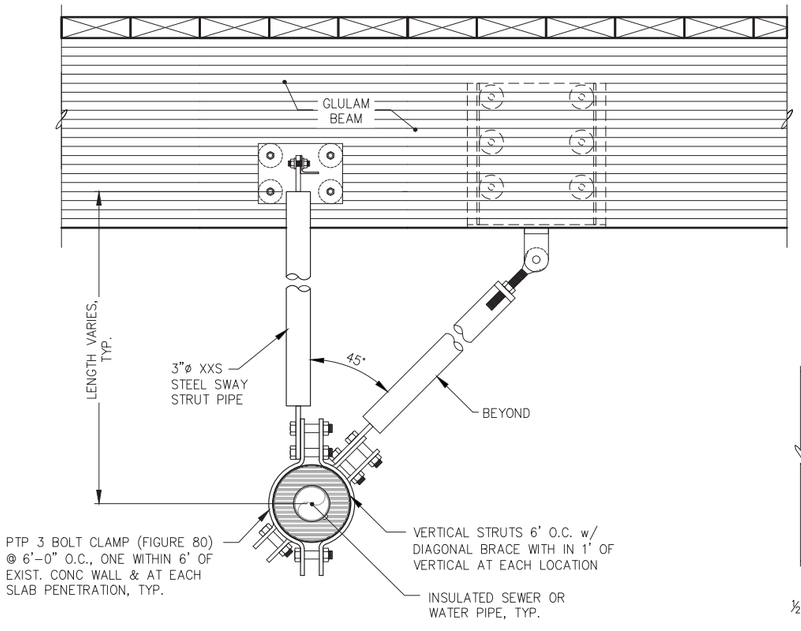

2 **PIPE SWAY STRUT DETAIL**

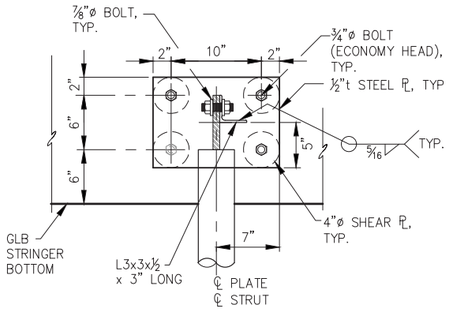

STRUT CONNECTION PLATE DETAIL

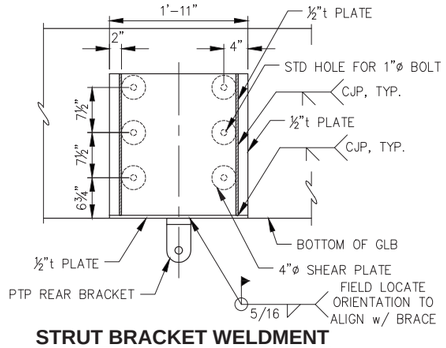

STRUT BRACKET WELDMENT ELEVATION

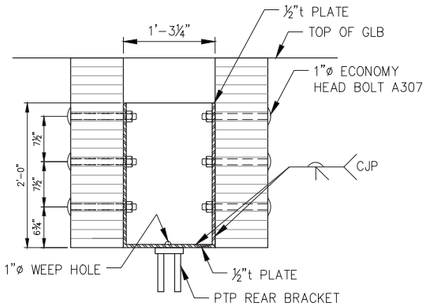

STRUT BRACKET WELDMENT SECTION

REVISIONS

REV.	DATE	DESCRIPTION	DWN.	CKD.	APP.

P N D ENGINEERS, INC.
9360 Glacier Highway Ste 100
Juneau, Alaska 99801
Phone: 907-586-2093
Fax: 907-586-2099
www.pndengineers.com

DESIGN: BCL CHECKED: CRS
DRAWN: PJD APPROVED: CRS
SCALE: AS SHOWN
DATE: 5/23/2019

STATE OF ALASKA 49TH Charles R. Somerville CE-8845 REGISTERED PROFESSIONAL ENGINEER

DOWNTOWN WATERFRONT IMPROVEMENTS PHASE I
CBJ CONTRACT NO. DH19-014

SHEET TITLE: **WATER & SEWER DETAILS**

PND PROJECT NO.: 182045 C.A.N. NO.: AECC250

C1.12

STRIPE POINT LAYOUT

POINT NO.	DESCRIPTION	NORTHING	EASTING
1	STRAIGHT AHEAD ARROW, TIP. SEE DETAILS	2361586.53	2544213.87
2	END 4" WHITE STRIPE	2361602.99	2544236.39
3	END 4" WHITE STRIPE	2361617.68	2544242.85
4	STRAIGHT AHEAD ARROW, TIP. SEE DETAILS	2361636.36	2544253.77
5	BEGIN 4" WHITE STRIPE	2361615.63	2544283.51
6	END 8" WHITE STRIPE	2361669.03	2544290.78
7	END 4" WHITE STRIPE	2361658.45	2544307.83
8	BEGIN 4" WHITE STRIPE	2361646.20	2544332.24
9	STRAIGHT AHEAD ARROW, TIP. SEE DETAILS	2361664.78	2544334.36
10	CORNER 24" WHITE STRIPE	2361656.46	2544348.60

STRIPE POINT LAYOUT (CON'T.)

POINT NO.	DESCRIPTION	NORTHING	EASTING
11	BEGIN 24" WHITE STRIPE	2361668.74	2544354.82
12	BEGIN 24" WHITE STRIPE	2361666.27	2544367.02
13	STRAIGHT AHEAD ARROW, TIP. SEE DETAILS	2361672.60	2544403.50
14	BEGIN 12" WHITE STOP BAR	2361666.60	2544408.65
15	BEGIN 24" WHITE STRIPE	2361680.50	2544404.14
16	BEGIN 24" WHITE STRIPE	2361655.60	2544420.87
17	STRAIGHT AHEAD ARROW, TIP. SEE DETAILS	2361652.87	2544404.24
18	CORNER 24" WHITE STRIPE	2361648.07	2544357.80
19	BEGIN 4" WHITE STRIPE	2361636.34	2544366.04
20	END 4" WHITE STRIPE	2361637.61	2544341.07

STRIPE POINT LAYOUT (CON'T.)

POINT NO.	DESCRIPTION	NORTHING	EASTING
21	BEGIN 4" WHITE STRIPE	2361625.36	2544365.48
22	STRAIGHT AHEAD ARROW, TIP. SEE DETAILS	2361616.90	2544370.79
23	STRAIGHT AHEAD ARROW, TIP. SEE DETAILS	2361566.66	2544290.76
24	BEGIN 4" WHITE STRIPE	2361564.20	2544268.01
25	END 4" WHITE STRIPE	2361576.45	2544243.60
26	END 4" WHITE STRIPE	2361565.47	2544243.04
27	STRAIGHT AHEAD ARROW, TIP. SEE DETAILS	2361561.51	2544236.53
28	END 24" WHITE STRIPE	2361562.06	2544220.71
29	END 24" WHITE STRIPE	2361571.28	2544212.82
30	STOP SIGN, SEE SIGNING SCHEDULE	2361682.94	2544397.05

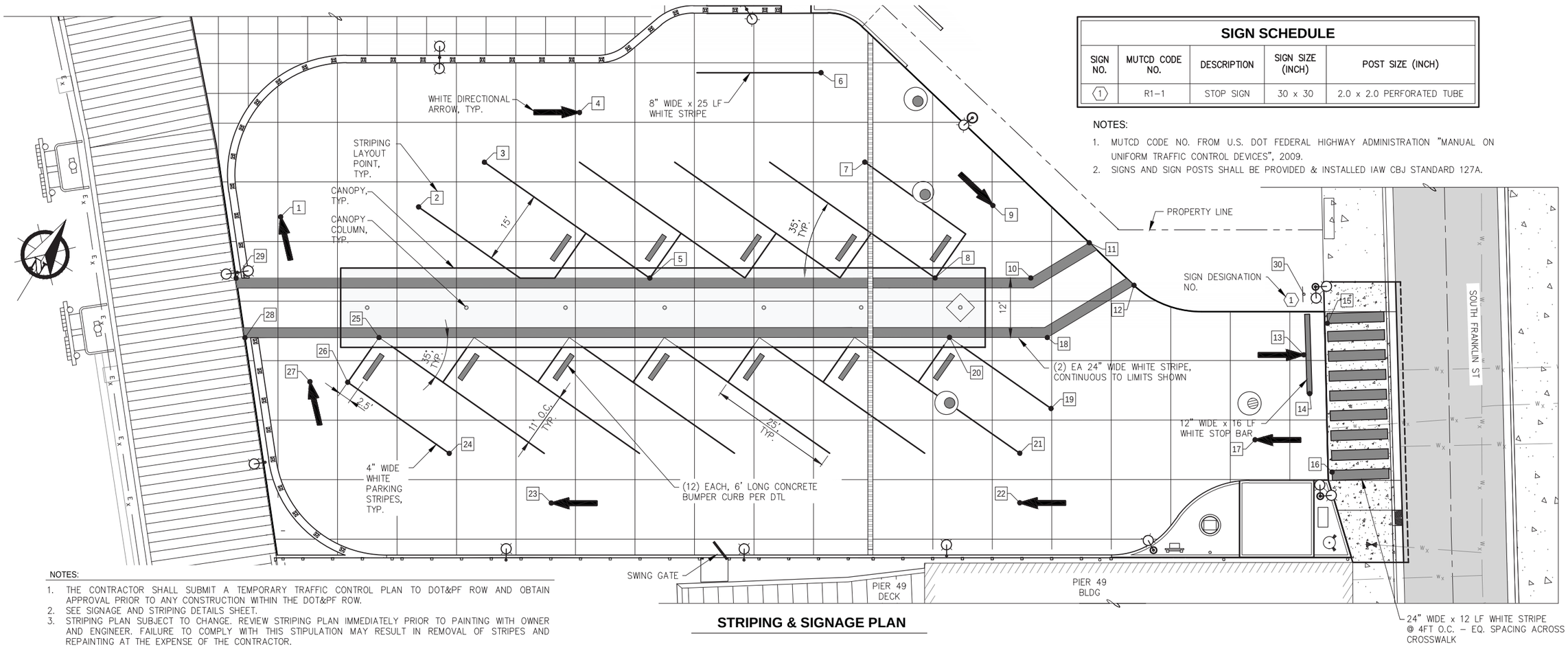

SIGN SCHEDULE

SIGN NO.	MUTCD CODE NO.	DESCRIPTION	SIGN SIZE (INCH)	POST SIZE (INCH)
1	R1-1	STOP SIGN	30 x 30	2.0 x 2.0 PERFORATED TUBE

NOTES:

1. MUTCD CODE NO. FROM U.S. DOT FEDERAL HIGHWAY ADMINISTRATION "MANUAL ON UNIFORM TRAFFIC CONTROL DEVICES", 2009.
2. SIGNS AND SIGN POSTS SHALL BE PROVIDED & INSTALLED IAW CBJ STANDARD 127A.

NOTES:

1. THE CONTRACTOR SHALL SUBMIT A TEMPORARY TRAFFIC CONTROL PLAN TO DOT&PF ROW AND OBTAIN APPROVAL PRIOR TO ANY CONSTRUCTION WITHIN THE DOT&PF ROW.
2. SEE SIGNAGE AND STRIPING DETAILS SHEET.
3. STRIPING PLAN SUBJECT TO CHANGE. REVIEW STRIPING PLAN IMMEDIATELY PRIOR TO PAINTING WITH OWNER AND ENGINEER. FAILURE TO COMPLY WITH THIS STIPULATION MAY RESULT IN REMOVAL OF STRIPES AND REPAINTING AT THE EXPENSE OF THE CONTRACTOR.

STRIPING & SIGNAGE PLAN

REVISIONS

REV.	DATE	DESCRIPTION	DWN.	CKD.	APP.

PND ENGINEERS, INC.
9360 Glacier Highway Ste 100
Juneau, Alaska 99801
Phone: 907-586-2093
Fax: 907-586-2099
www.pndengineers.com

DESIGN: CRS CHECKED: CRS
DRAWN: PJD APPROVED: CRS
SCALE: SCALE IN FEET 0 10 20 FT.
DATE: 5/23/2019

STATE OF ALASKA 49TH — Charles R. Somerville CE-8845 — REGISTERED PROFESSIONAL ENGINEER

DOWNTOWN WATERFRONT IMPROVEMENTS PHASE I
CBJ CONTRACT NO. DH19-014

SHEET TITLE: **STRIPING & SIGNAGE PLAN**

PND PROJECT NO.: 182045 C.A.N. NO.: AECC250

C1.13

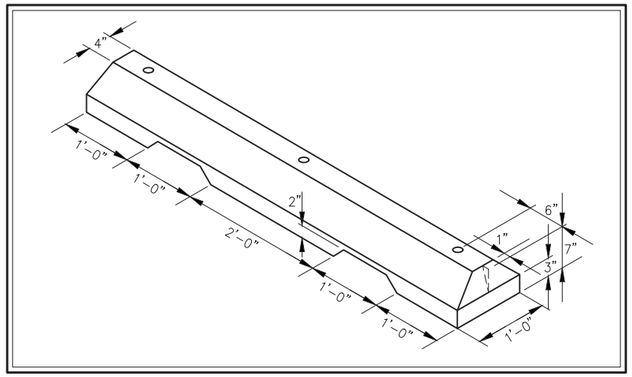

PRECAST CONCRETE BUMPER CURB
DETAIL
(QUANTITY: 12 REQ'D.)

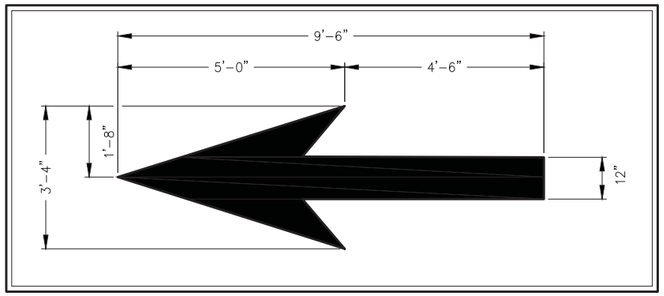

THROUGH LANE-USE ARROW
(QUANTITY: 8 REQ'D.)

NOTE:
ARROWS TO BE LOCATED AT APPROXIMATE LOCATION SHOWN ON SIGNING AND STRIPING PLAN. EXACT LOCATION TO BE DETERMINED IN FIELD AS INSTRUCTED BY ENGINEER.

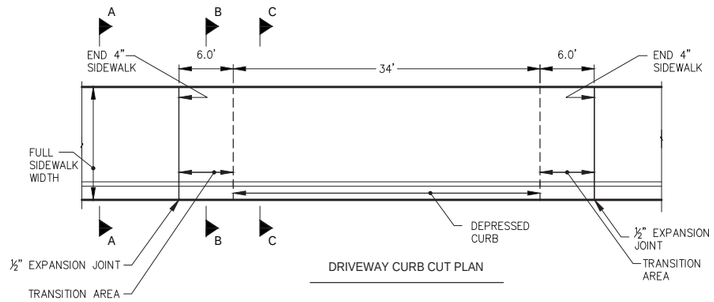

DRIVEWAY CURB CUT PLAN

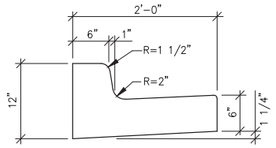

STANDARD CURB & GUTTER

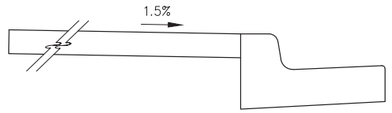

NORMAL SECTION A-A

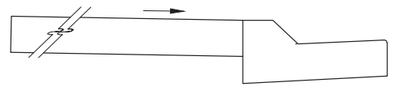

TRANSITION SECTION B-B

DEPRESSED CURB & GUTTER

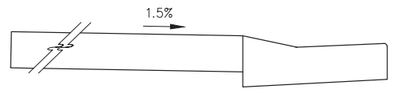

DEPRESSED SECTION C-C

DRIVEWAY CURB CUT, CURB & GUTTER DETAILS
(DOT&PF STD DTL I.20.20)

GENERAL CURB & GUTTER NOTES:

1. THE VERTICAL MATCH POINT FOR ALL CURB AND GUTTER TRANSITIONS SHALL BE THE FLOWLINE.
2. CURB AND GUTTER TRANSITIONS SHALL BE GRADUAL OVER A MIN DISTANCE OF 6 LF PER ENGINEER DIRECTION.
3. ALL STEEL MUST HAVE A MINIMUM OF 2" OF CONCRETE COVER.
4. ALL JOINTS AND SEAMS SHALL BE TOOLED AND EDGED, SEE SERIES 6 FOR CONTROL JOINT DTL.
5. STEEL TROWELING FINISH REQUIRED PRIOR TO BROOM FINISHING OF ALL SURFACES.
6. CONCRETE INTERNATIONAL CORPORATION ASHFORD FORMULA OR APPROVED EQUAL SHALL BE APPLIED AS A CURING COMPOUND. APPLICATION SHALL EXPLICITLY CONFORM TO THE MANUFACTURER'S RECOMMENDATIONS.
7. BED ALL TYPES OF CURB AND GUTTER W/ 6"t. MIN LAYER OF BASE COURSE GRADING D-1, ALL AROUND.
8. SUBBASE MATERIALS SHALL BE PER APPLICABLE FILL SECTION, EXCEPT AS NOTED.
9. CURBS SHALL HAVE POLY-FIBER REINFORCEMENT UNO, SEE SPECIFICATIONS.
10. PROVIDE A COARSE BROOMED FINISH ON RAMP RUNS PERPENDICULAR TO THE RAMP SLOPE.

REVISIONS

REV.	DATE	DESCRIPTION	DWN.	CKD.	APP.

PND ENGINEERS, INC.
9360 Glacier Highway Ste 100
Juneau, Alaska 99801
Phone: 907-586-2093
Fax: 907-586-2099
www.pndengineers.com

DESIGN: CRS CHECKED: CRS
DRAWN: PJD APPROVED: CRS
SCALE: SCALE IN FEET 0 10 20 FT.
DATE: 5/23/2019

STATE OF ALASKA 49TH — Charles R. Somerville CE-8845 — REGISTERED PROFESSIONAL ENGINEER

DOWNTOWN WATERFRONT IMPROVEMENTS
PHASE I
CBJ CONTRACT NO. DH19-014

SHEET TITLE:
STRIPING, BUMPER CURB & DRIVEWAY CURB CUT

PND PROJECT NO.: 182045 C.A.N. NO.: AECC250

C1.14

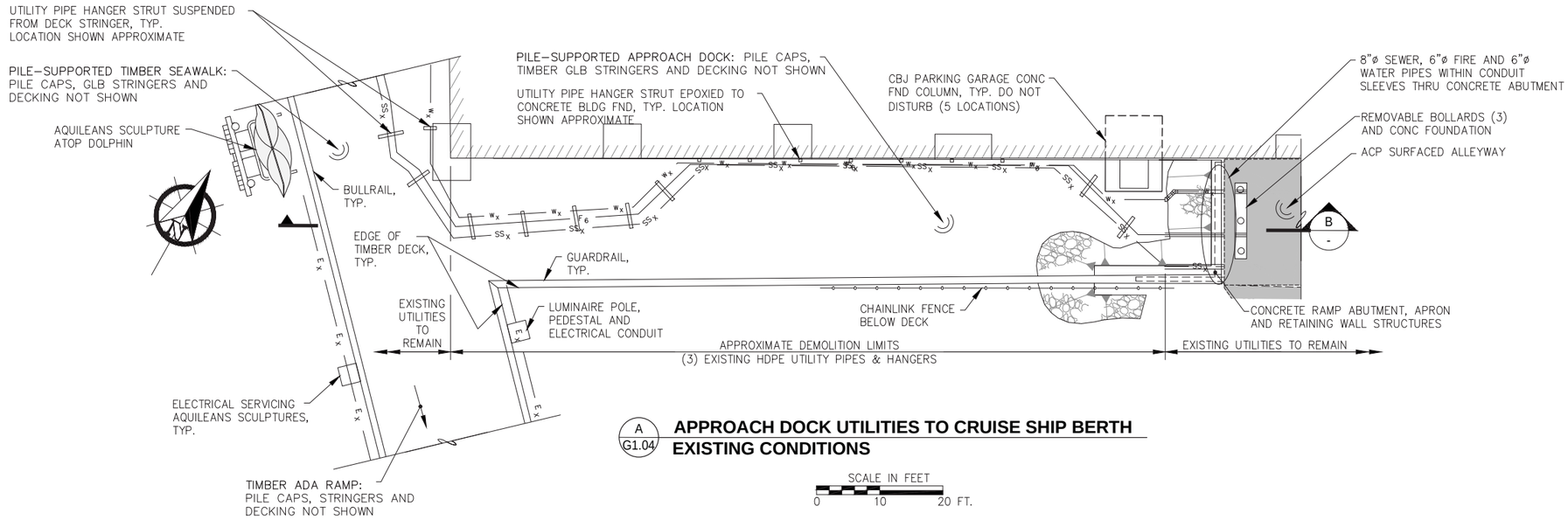

A G1.04 **APPROACH DOCK UTILITIES TO CRUISE SHIP BERTH EXISTING CONDITIONS**

SCALE IN FEET
0 10 20 FT.

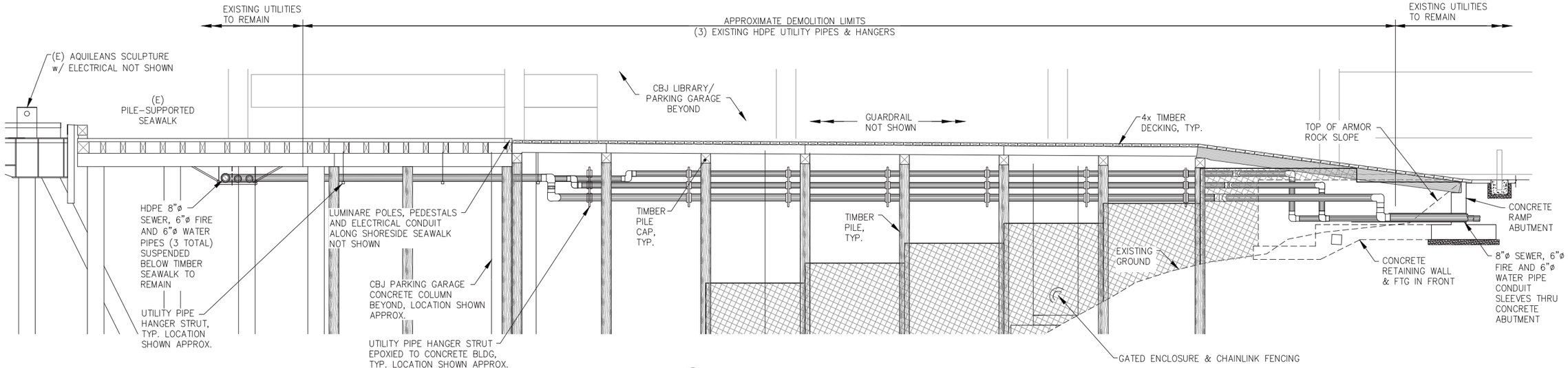

B **APPROACH DOCK EXISTING UTILITIES PROFILE**

SCALE IN FEET
0 5 10 FT.

NOTE:
SEE ALSO DEMOLITION PLANS

REVISIONS

REV.	DATE	DESCRIPTION	DWN.	CKD.	APP.

PND ENGINEERS, INC.
9360 Glacier Highway Ste 100
Juneau, Alaska 99801
Phone: 907-586-2093
Fax: 907-586-2099
www.pndengineers.com

DESIGN: CRS CHECKED: CRS
DRAWN: PJD APPROVED: CRS
SCALE: AS SHOWN
DATE: 5/23/2019

STATE OF ALASKA 49TH — Charles R. Somerville CE-8845 — REGISTERED PROFESSIONAL ENGINEER

DOWNTOWN WATERFRONT IMPROVEMENTS PHASE I
CBJ CONTRACT NO. DH19-014

SHEET TITLE: **APPROACH DOCK UTILITIES EXISTING CONDITIONS**

PND PROJECT NO.: 182045 C.A.N. NO.: AECC250

C1.15

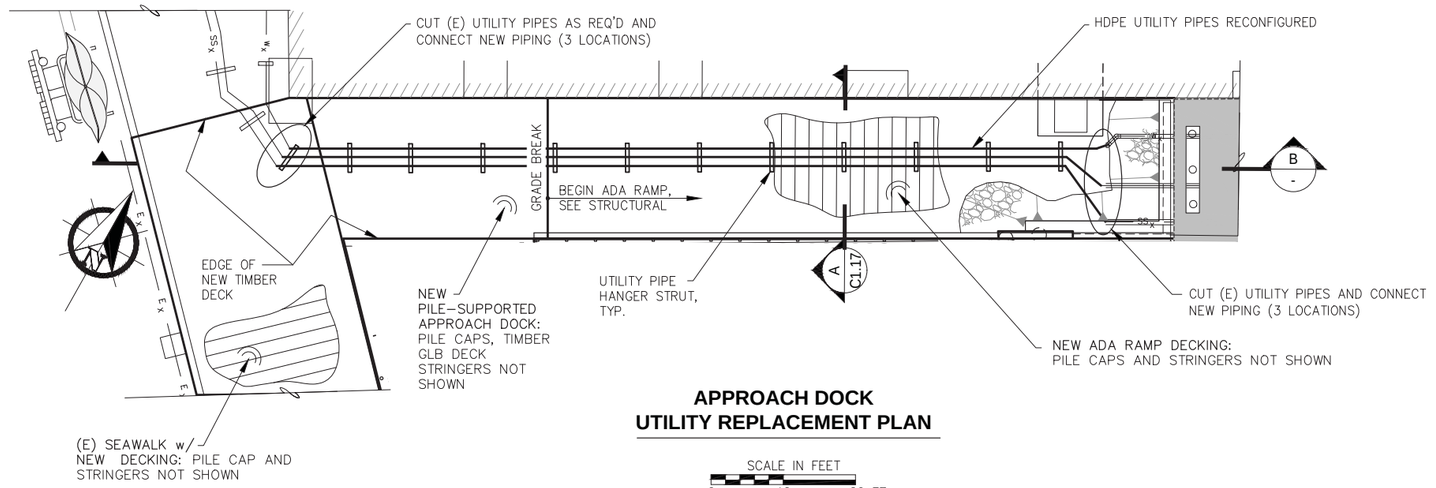

APPROACH DOCK UTILITY REPLACEMENT PLAN

SCALE IN FEET
0 10 20 FT.

UTILITY RELOCATION NOTES:

1. UTILITIES SHOWN APPROXIMATE, FIELD LOCATE AND ADJUST PER ENGINEER APPROVAL.
2. FABRICATE ALL BENDS IN UTILITY PIPES AS REQ'D.
3. EXISTING PIPING AND HANGER EQUIPMENT IN GOOD CONDITION MAY BE SALVAGED AND INCORPORATED INTO THE UTILITY RECONFIGURATION WORK TO THE EXTENT PRACTICABLE.

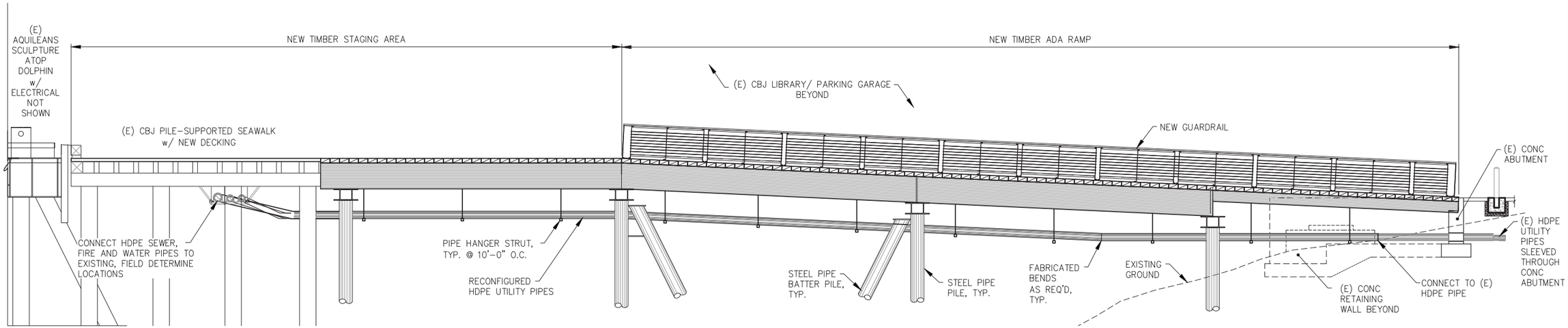

APPROACH DOCK PROFILE w/ REPLACEMENT UTILITY PIPES

B
-

SCALE IN FEET
0 5 10 FT.

REVISIONS

REV.	DATE	DESCRIPTION	DWN.	CKD.	APP.

PND ENGINEERS, INC.
9360 Glacier Highway Ste 100
Juneau, Alaska 99801
Phone: 907-586-2093
Fax: 907-586-2099
www.pndengineers.com

DESIGN: CRS CHECKED: CRS
DRAWN: PJD APPROVED: CRS
SCALE: AS SHOWN
DATE: 5/23/2019

STATE OF ALASKA 49TH Charles R. Somerville CE-8845 REGISTERED PROFESSIONAL ENGINEER

DOWNTOWN WATERFRONT IMPROVEMENTS PHASE I
CBJ CONTRACT NO. DH19-014

SHEET TITLE: **APPROACH DOCK UTILITIES REPLACEMENT PLAN**

C1.16

PND PROJECT NO.: 182045 C.A.N. NO.: AECC250

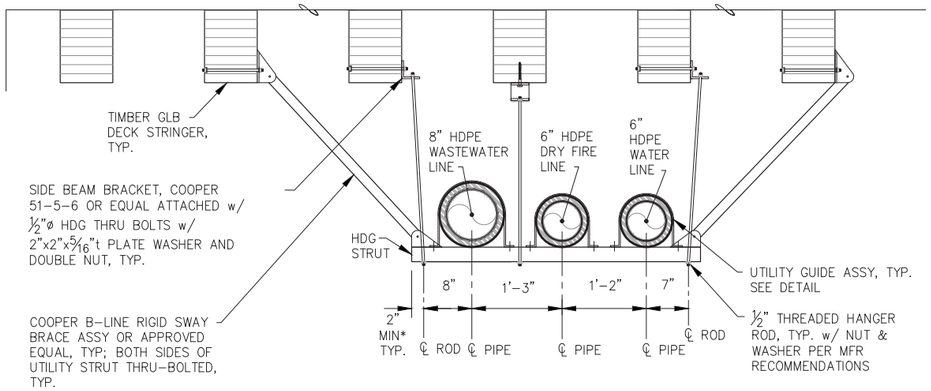

THREE-PIPE HANGER STRUT DETAIL

A
C1.16

HANGER STRUT NOTES:

1. HANGERS SHALL BE INSTALLED ON UTILITY LINE PATH @ 10'–0" OC MAX.
2. HANGERS SHALL BE INSTALLED ADJACENT TO EACH SIDE OF ALL FITTINGS, UNO. MAINTAIN 6" CLR TO FUSED JOINTS.
3. FIELD DRILL HANGER AND SWAY BRACE ATTACHMENT HOLES THROUGH TIMBER STRINGERS.
4. TREAT ALL HOLES AND CUTS IN TIMBER PER AWPA M–4
5. STRUT, ROD & SWAY BRACE LENGTHS SHALL VARY w/ PIPE ROUTE AND LOCATION.
6. ALL HANGER AND SWAY BRACE COMPONENTS SHALL BE HOT DIP GALVANIZED OR 316 SS.
7. ALL HANGERS AND SWAY BRACE COMPONENTS SHALL BE COORDINATED w/ MFR TO ENSURE SEISMIC LOAD CAPABILITY IS MET TO THE LOADS PROVIDED ON S1.01 TO 2013 NFPA STANDARDS. MAX ROD LENGTH SHALL BE 3'–0", UNO.

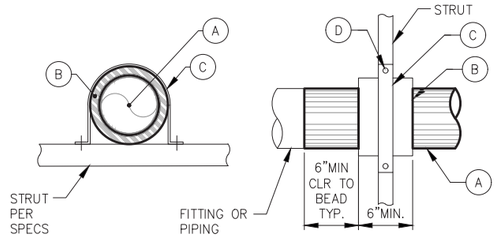

UTILITY GUIDE SUPPORT

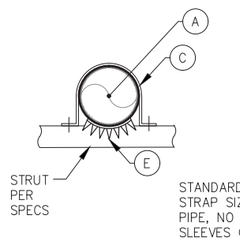

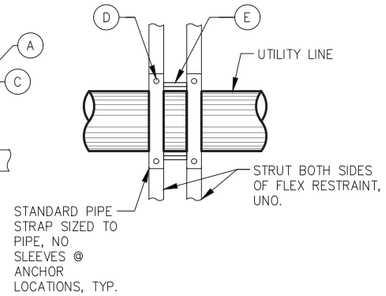

UTILITY ANCHOR SUPPORT

UTILITY SUPPORT DETAILS

NOTES:

1. SLEEVES SHALL BE SLID OVER PIPE PRIOR TO BUTT WELD AS REQUIRED.
2. PIPE STRAPS SHALL BE SIZED FOR PIPE SLEEVES WHERE SLEEVES ARE REQ'D.
3. UTILITY GUIDE SUPPORTS SHALL HAVE 6" MIN CLEARANCE FROM BUTT–WELDED JOINTS.
4. STRUTS SUPPORTING (2) OR MORE PIPES SHALL BE SECURED w/ MIN (3) ½" BOLTS OR EPOXY ANCHORS, UNO.
5. STRUTS SUPPORTING (1) PIPE SHALL BE SECURED w/ MIN (2) ½" BOLTS OR EPOXY ANCHORS, UNO.

SUPPORT COMPONENT TABLE

UTILITY	(A)	(B)	(C)	(D)	(E)
6" WATER OR FIRE	6" HDPE UTILITY LINE	8" SDR 11 HDPE SLEEVE	STANDARD PIPE STRAP	½" 316 SS BOLT & CHANNEL NUT	ELECTROFUSION FLEX RESTRAINT
8" WASTEWATER	8" HDPE UTILITY LINE	10" SDR 13.5 HDPE SLEEVE	STANDARD PIPE STRAP	½" 316 SS BOLT & CHANNEL NUT	ELECTROFUSION FLEX RESTRAINT

CITY & BOROUGH OF JUNEAU DOCKS & HARBORS

REVISIONS

REV.	DATE	DESCRIPTION	DWN.	CKD.	APP.

PND ENGINEERS, INC.
9360 Glacier Highway Ste 100
Juneau, Alaska 99801
Phone: 907-586-2093
Fax: 907-586-2099
www.pndengineers.com

DESIGN: CRS CHECKED: CRS
DRAWN: PJD APPROVED: CRS
SCALE: AS SHOWN
DATE: 5/23/2019

STATE OF ALASKA 49TH Charles R. Somerville CE-8945 REGISTERED PROFESSIONAL ENGINEER

DOWNTOWN WATERFRONT IMPROVEMENTS PHASE I
CBJ CONTRACT NO. DH19-014

SHEET TITLE: **APPROACH DOCK UTILITIES SUPPORT DETAILS**

PND PROJECT NO.: 182045 C.A.N. NO.: AECC250

C1.17

STRUCTURAL GENERAL NOTES

APPLICABLE CODES AND STANDARDS

1. INTERNATIONAL CODE COUNCIL (ICC), "INTERNATIONAL BUILDING CODE (IBC) 2012".
2. AMERICAN ASSOCIATION OF STATE HIGHWAY BRIDGES (AASHTO), "STANDARD SPECIFICATIONS FOR HIGHWAY BRIDGES, SEVENTEENTH EDITION, 2002".
3. AMERICAN SOCIETY FOR TESTING AND MATERIALS (ASTM) STANDARDS, CURRENT EDITION.
4. AMERICAN INSTITUTE OF STEEL CONSTRUCTION (AISC), "MANUAL OF STEEL CONSTRUCTION, FIFTEENTH EDITION".
5. AMERICAN WELDING SOCIETY (AWS), "D1.1 STRUCTURAL WELDING CODE – STEEL, CURRENT EDITION".
6. AMERICAN CONCRETE INSTITUTE (ACI), "ACI MANUAL OF CONCRETE PRACTICE, CURRENT EDITION".
7. AMERICAN CONCRETE INSTITUTE (ACI), "318–14 BUILDING CODE REQUIREMENTS FOR STRUCTURAL CONCRETE AND COMMENTARY".
8. NATIONAL DESIGN SPECIFICATIONS FOR WOOD CONSTRUCTION (NDS), 2012 EDITION.
9. AMERICAN BUREAU OF SHIPPING (ABS), RULES FOR BUILDING AND CLASSING OFFSHORE INSTALLATIONS, 1997.
10. AMERICAN SOCIETY OF CIVIL ENGINEERS (ASCE), MINIMUM DESIGN LOADS AND ASSOCIATED CRITERIA FOR BUILDING AND OTHER STRUCTURES, ASCE 7–16

DESIGN CRITERIA

THE FOLLOWING LOADS ARE PRESCRIBED BY THE INTERNATIONAL BUILDING CODE, 2012. LOADS ARE ALSO GENERATED FROM THE AASHTO STANDARD SPECIFICATIONS FOR HIGHWAY BRIDGES 17TH EDITION – 2002 WHERE NOTED.

DESIGN PARAMETERS

DOCK LIVE LOAD:
AASHTO H20 TRUCK (2 MONTH DURATION, Cd= 1.15)
400 PSF UNIFORM LOAD
50,000 lb. FORK LIFT AXLE LOAD (2 MONTH DURATION, Cd= 1.15)
200,000 lb. TRUCK CRANE (7 DAY DURATION, Cd= 1.25), OUT RIGGER LOAD (1–DAY DURATION, Cd=1.33) WHILE IN OPERATION OUTRIGGER MUST BE SPREAD OVER A MIN OF 5 STRINGERS AND THE LIFTING PLAN SHALL BE APPROVED BY A REGISTERED PROFESSIONAL ENGINEER IN THE STATE OF ALASKA AND SUBMITTED TO THE ENGINEER FOR APPROVAL.

VEHICLE GUARDRAILS:
6,000# POINT LOAD ANYWHERE ON RAIL OR POST
50 PLF @ HORIZONTAL PEDESTRIAN RAILS.

ADA APPROACH RAMP:
AASHTO H15 TRUCK (7 DAY DURATION, CD=1.25)
200PSF UNIFORM LOAD

OVER FRAMING:
100 PSF UNIFORM AREA LOAD
AASHTO H10 TRUCK (7 DAY DURATION (1)=1.25)

SNOW LOAD

GROUND SNOW LOAD = 70 PSF UNIFORM

SEISMIC LOAD

SITE CLASS =C, SOFT ROCK
SEISMIC DESIGN CATEGORY = D SIESMIC IMPORTANCE FACTOR = Ie=1.0
SS= 0.528g SDS=0.418g SIESMIC RESPONSE MODIFICATION FACTOR = R=1.0
SS= 0.356g SDS=0.343g SIESMIC RESPONSE COEFFICIENT FACTOR = CS=0.418

WIND LOAD

IBC 140 MPH 3–SECOND GUST, EXPOSURE D UNLESS OTHERWISE NOTED.
WIND OCCUPANCY IMPORTANCE = II

FLOOD LOAD

CODE: ASCE 7–16
BASE FLOOD ELEVATION (BFE) = +25' MLLW
BREAKING WAVE HEIGHT (Hb) = 3'
STILL WATER DEPTH (ds) = 50'

ABBREVIATIONS

ø	DIAMETER
@	AT
ADA	AMERICANS WITH DISABILITIES ACT
APPROX	APPROXIMATELY
ASCE	AMERICAN SOCIETY OF CIVIL ENGINEERS
AASHTO	AMERICAN ASSOCIATION OF STATE HIGHWAY TRANSPORTATION OFFICIALS
ASTM	AMERICAN SOCIETY OF TESTING AND MATERIALS
BTM	BOTTOM
CJ	CONSTRUCTION JOINT
℄	CENTERLINE
CON	CONNECTION
CONC.	CONCRETE
CONT	CONTINUOUS
CP	COMPLETE PENETRATION
CPP	CORRUGATED PLASTIC PIPE
CRNRS	CORNERS
CS	COUNTER SINK
DBL	DOUBLE
E	EXISTING
EA.	EACH
ELEV.	ELEVATION
E.W.	EACH WAY
FLGS	FLANGES
FTG	FOOTING
FND	FOUNDATION
GALV	GALVANIZED
GLB	GLUE–LAMINATED BEAM
GLULAM	GLUE LAMINATED TIMBER
HORZ.	HORIZANTAL
HDPE	HIGH–DENSITY POLYETHYLENE
kip	1000 POUNDS
Lb	POUND
LBS	POUNDS
MI	MALLEABLE IRON
MID	MIDDLE
MIN	MINIMUM
MLLW	MEAN LOW LOW WATER
NIC	NOT IN CONTRACT
NO.	NUMBER
O.C.	ON CENTER
OS.	OWNER SUPPLIED
OPP.	OPPOSITE
OSHA	OCCUPATIONAL SAFETY AND HEALTH ADMINISTRATION
PL	PLATE
PSF	POUND PER SQUARE FOOT
PLF	POUND PER LINEAR FOOT
PED	PEDESTRIAN
R	RADIUS
REG.	REGULATION
REQ'D	REQUIRED
SC	SLIP CRITICAL
SIM	SIMILAR
S.S.	STAINLESS STEEL
STA	STATION
STD	STANDARD
TRTD	TREATED
TYP.	TYPICAL
t	THICKNESS
UNO	UNLESS NOTED OTHERWISE
VERT.	VERTICAL
W/	WITH
W/OUT	WITH OUT
WP	WORK POINT

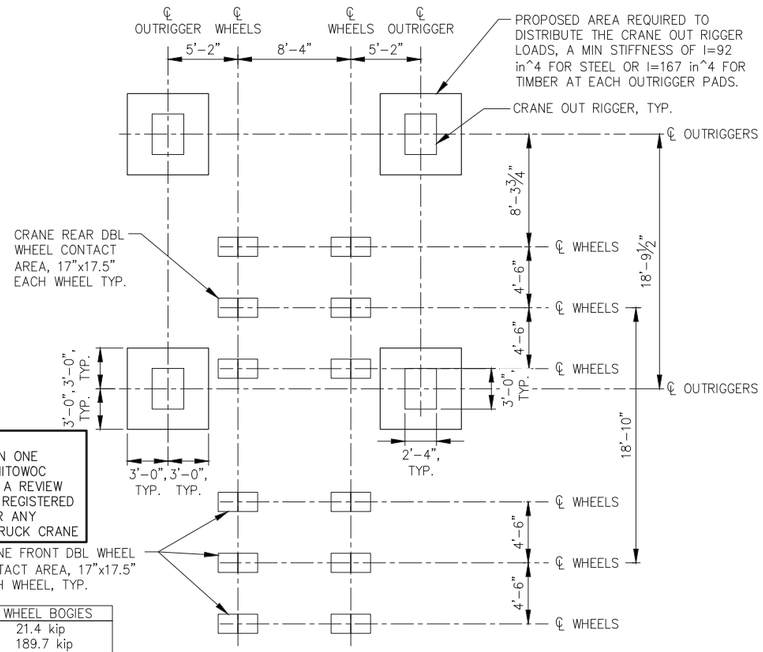

NOTE:
CRANE LOADING IS BASED ON ONE LENGTH OF BOOM ON A MANITOWOC 3900 SERIES TRUCK CRANE. A REVIEW SHALL BE COMPLETED BY A REGISTERED PROFESSIONAL ENGINEER FOR ANY VARIATION OF THE DESIGN TRUCK CRANE

CRANE FRONT AND REAR WHEEL BOGIES		
FRONT	= 70.6 kip	21.4 kip
REAR	= 140.5 kip	189.7 kip
OUTRIGGER	= 230kip OVER (2) OUTRIGGERS	

CRANE LOAD DISTRIBUTION REQUIREMENTS

FORKLIFT AXLE LOADS
FRONT = 44 kip
REAR = 6 kip

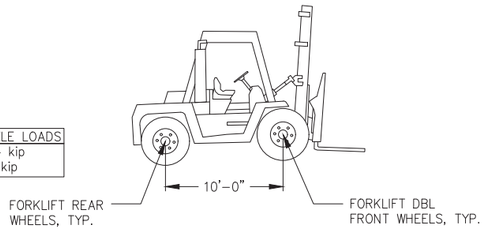

FORKLIFT ELEVATION

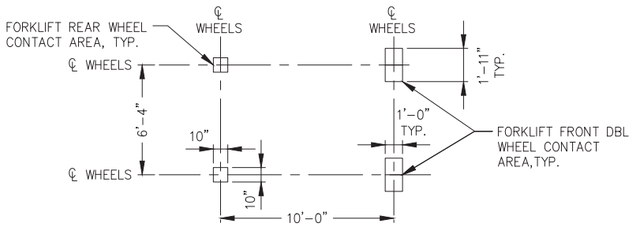

FORKLIFT WHEEL DISTRIBUTION LAYOUT

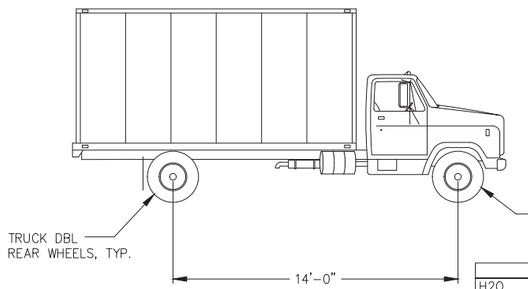

AXLE LOADS		
H20	H15	H10
FRONT = 8 kip	FRONT = 6 kip	FRONT = 4 kip
REAR = 32 kip	REAR = 24 kip	REAR = 16 kip

AASHTO TRUCK ELEVATION

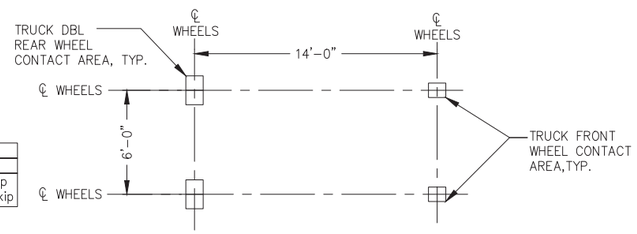

AASHTO TRUCK WHEEL DISTRIBUTION LAYOUT

REVISIONS

REV.	DATE	DESCRIPTION	DWN.	CKD.	APP.

P N D ENGINEERS, INC.
9360 Glacier Highway Ste 100
Juneau, Alaska 99801
Phone: 907-586-2093
Fax: 907-586-2099
www.pndengineers.com

DESIGN: MDS CHECKED: CRS
DRAWN: KLL APPROVED: CRS
SCALE: NTS
DATE: 5/23/2019

STATE OF ALASKA 49TH Charles R. Somerville CE-8845 REGISTERED PROFESSIONAL ENGINEER

DOWNTOWN WATERFRONT IMPROVEMENTS PHASE I
CBJ CONTRACT NO. DH19-014

SHEET TITLE: **STRUCTURAL GENERAL NOTES**

PND PROJECT NO.: 182045 C.A.N. NO.: AECC250

S1.01

PILE SCHEDULE SUMMARY TABLE

LOCATION		DIA. (INCH)	THICKNESS (INCH)	BATTER	SUPPLY LENGTH (ft)	ULTIMATE LOAD (kips)	
						TENSION	COMPRESSION
CONCRETE DOCK	1B VERT	18"	0.500		90		370
	1C VERT	18"	0.500		90		400
	1C BATTER	18"	0.500	2V:1H	110	70	70
	1D VERT	18"	0.500		100		420
	1G VERT	18"	0.500		100		220
	2B VERT	18"	0.500		80		750
	2C VERT	18"	0.500		90		820
	2C BATTER	18"	0.500	2V:1H	100	70	70
	2D VERT	18"	0.500		90		620
	2D.5 VERT	18"	0.500		90		450
	2G VERT	18"	0.500		100		250
	3B VERT	18"	0.500		80		750
	3C VERT	18"	0.500		90		820
	3C BATTER	18"	0.500	2V:1H	110	70	70
	3D VERT	18"	0.500		90		620
	3D.5 VERT	18"	0.500		90		510
	3G VERT	18"	0.500		100		300
	4B VERT	18"	0.500		80		770
	4C VERT	18"	0.500		90		840
	4C BATTER	18"	0.500	2V:1H	100	70	70
	4D VERT	18"	0.500		90		840
	4E VERT	18"	0.500		90		620
	4G VERT	18"	0.500		90		200
	5B VERT	18"	0.500		90		730
	5C VERT	18"	0.500		90		800
	5C BATTER	18"	0.500	2V:1H	100	70	70
	5D VERT	18"	0.500		90		800
	5E VERT	18"	0.500		90		640
	5G VERT	18"	0.500		90		240
	6B.5 VERT	18"	0.500		90		710
	6C VERT	18"	0.500		90		760
	6D BATTER	18"	0.500	2V:1H	90	70	70
	6D VERT	18"	0.500		90		1020
	6E VERT	18"	0.500		90		880
	6G VERT	18"	0.500		90		370

PILE SCHEDULE SUMMARY TABLE

LOCATION		DIA. (INCH)	THICKNESS (INCH)	BATTER	SUPPLY LENGTH (ft)	ULTIMATE LOAD (kips)	
						TENSION	COMPRESSION
TIMBER DOCK	7C.5 VERT	18"	0.500		80		570
	7D VERT	18"	0.500		80		800
	7D BATTER	18"	0.500	2V:1H	100	70	70
	7E VERT	18"	0.500		80		1060
	7G VERT	18"	0.500		90		530
	8D VERT	16"	0.500		80		650
	8D BATTER	16"	0.500	2V:1H	90	70	70
	8E VERT	16"	0.500		80		850
	8G VERT	16"	0.500		80		540
	9E BATTER NW	16"	0.500	2V:1H	80		450
	9E BATTER SE	16"	0.500	2V:1H	90		450
	9F BATTER NW	16"	0.500	2V:1H	80		450
	9F BATTER SE	16"	0.500	2V:1H	90		450
	9G VERT	16"	0.500		80		170
	10E BATTER NW	16"	0.500	2V:1H	80		450
	10E BATTER SE	16"	0.500	2V:1H	90		450
	10F BATTER NW	16"	0.500	2V:1H	80		450
	10F BATTER SE	16"	0.500	2V:1H	90		450
	10G VERT	16"	0.500		80		280
	11E BATTER NW	16"	0.500	2V:1H	80		450
	11E BATTER SE	16"	0.500	2V:1H	80		450
	11F BATTER NW	16"	0.500	2V:1H	70		450
	11F BATTER SE	16"	0.500	2V:1H	90		450
	11G VERT	16"	0.500		80		380
	12E VERT	16"	0.500		70		680
	12F VERT	16"	0.500		70		710
	12G VERT	16"	0.500		80		380
APPROACH RAMP	13AA VERT	16"	0.500		70		200
	13BB VERT	16"	0.500		70	50	210
	13BB BATTER	16"	0.500	2V:1H	70	81	81
	13CC VERT	16"	0.500		70	54	210
	13CC BATTER	16"	0.500	2V:1H	70	84	81
	13G VERT	16"	0.500		70		110
	14AA VERT	16"	0.500		70		150
	14BB VERT	16"	0.500		70		160
	14CC VERT	16"	0.500		70		160
	14G VERT	16"	0.500		70		90
CANOPY FND.	3A' VERT	16"	0.500		90		100

RETAINING WALL PILE SCHEDULE SUMMARY TABLE

PILE DESIGNATION	NORTHING	EASTING	DIA. (INCH)	THICKNESS (INCH)	SUPPLY LENGTH (ft)	ULTIMATE LOAD (kips)
						COMPRESSION
1	2361819.69	2544107.73	24	0.750	60	500
2	2361816.99	2544103.94	24	0.750	60	500
3	2361809.47	2544108.93	24	0.750	60	950
4	2361801.11	2544114.47	24	0.750	60	500
5	2361792.78	2544120.00	24	0.750	60	500
6	2361784.46	2544125.51	24	0.750	60	950
7	2361776.11	2544131.05	24	0.750	70	500
8	2361767.78	2544136.58	24	0.750	70	500
9	2361759.45	2544142.10	24	0.750	70	950
10	2361751.11	2544147.63	24	0.750	70	500
11	2361742.78	2544153.16	24	0.750	70	500
12	2361734.44	2544158.68	24	0.750	70	950
13	2361731.88	2544169.00	24	0.750	80	500
14	2361729.74	2544179.60	24	0.750	80	500
15	2361727.59	2544190.19	24	0.750	80	500
16	2361725.44	2544200.79	24	0.750	80	950
17	2361718.06	2544207.73	24	0.750	70	500
18	2361709.73	2544213.26	24	0.750	70	500
19	2361701.39	2544218.78	24	0.750	70	950
20	2361699.36	2544228.81	24	0.750	70	500
21	2361697.33	2544238.84	24	0.750	70	500
22	2361695.30	2544248.86	24	0.750	70	500
23	2361693.27	2544258.89	24	0.750	70	500
24	2361691.24	2544268.91	24	0.750	70	700
25	2361689.21	2544278.94	24	0.750	70	700
26	2361687.18	2544288.97	24	0.750	70	500
27	2361675.04	2544296.58	24	0.750	70	950
28	2361664.59	2544303.14	24	0.750	70	500
29	2361654.14	2544309.70	24	0.750	70	950
30	2361643.69	2544316.25	24	0.750	70	500
31	2361633.24	2544322.81	24	0.750	70	950
32	2361623.10	2544329.17	24	0.750	70	500
33	2361612.97	2544335.53	24	0.750	70	950
34	2361602.84	2544341.89	24	0.750	70	500
35	2361592.70	2544348.24	24	0.750	70	950
36	2361597.33	2544357.52	24	0.750	70	500
SPARE	NA	NA	24	0.750	40	-

NOTES:

1. ALL PILES SHALL BE FABRICATED WITH AN APF INSIDE FLANGE OPEN CUTTING SHOE.
2. RETAINING WALL PILES ARE OWNER SUPPLIED, COORDINATE WITH OWNER FOR STORAGE LOCATION, CONTRACTOR SHALL SORT AND DELIVER PILES FROM STORAGE LOCATION TO JOB SITE, INCIDENTAL TO PILE INSTALLATION BID ITEM.

CITY & BOROUGH OF JUNEAU — DOCKS & HARBORS

REVISIONS

REV.	DATE	DESCRIPTION	DWN.	CKD.	APP.

PND ENGINEERS, INC.
9360 Glacier Highway Ste 100
Juneau, Alaska 99801
Phone: 907-586-2093
Fax: 907-586-2099
www.pndengineers.com

DESIGN: MDS CHECKED: CRS
DRAWN: PJD APPROVED: CRS
SCALE: NTS

STATE OF ALASKA — 49 TH — Charles R. Somerville CE-8845 — REGISTERED PROFESSIONAL ENGINEER
DATE: 5/23/2019

DOWNTOWN WATERFRONT IMPROVEMENTS PHASE I
CBJ CONTRACT NO. DH19-014

SHEET TITLE: **PILE SCHEDULES**

PND PROJECT NO.: 182045 C.A.N. NO.: AECC250

S1.02

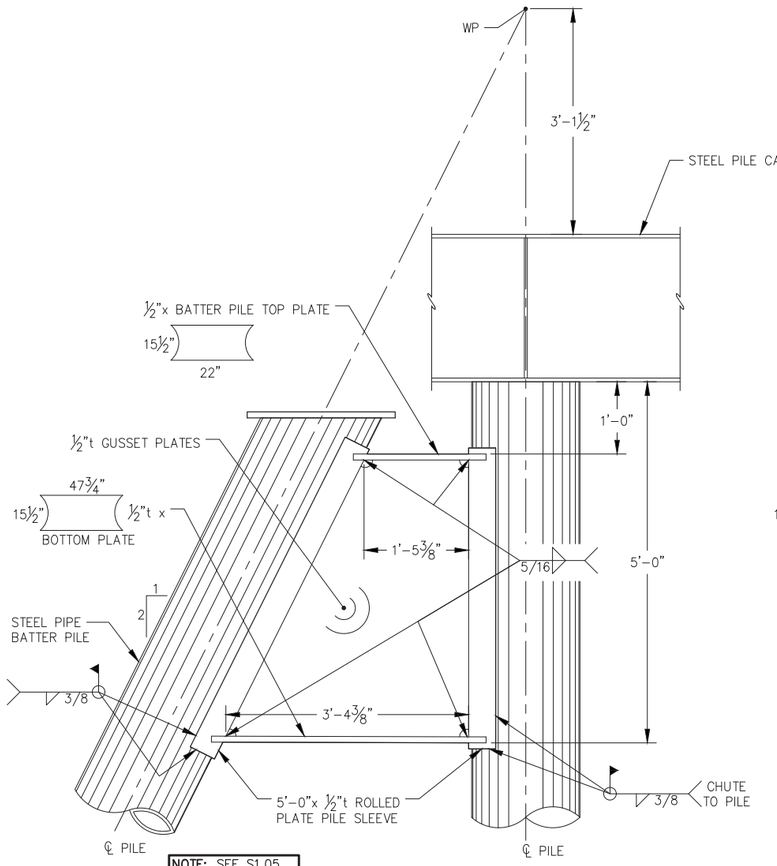

NOTE: SEE S1.05 FOR VERTICAL PILE WELD TO CAP

ELEVATION

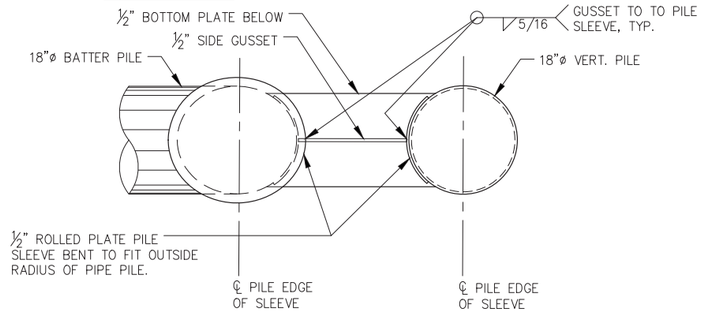

TYPICAL 18" SIDE BATTER PILE CONNECTION
PLAN

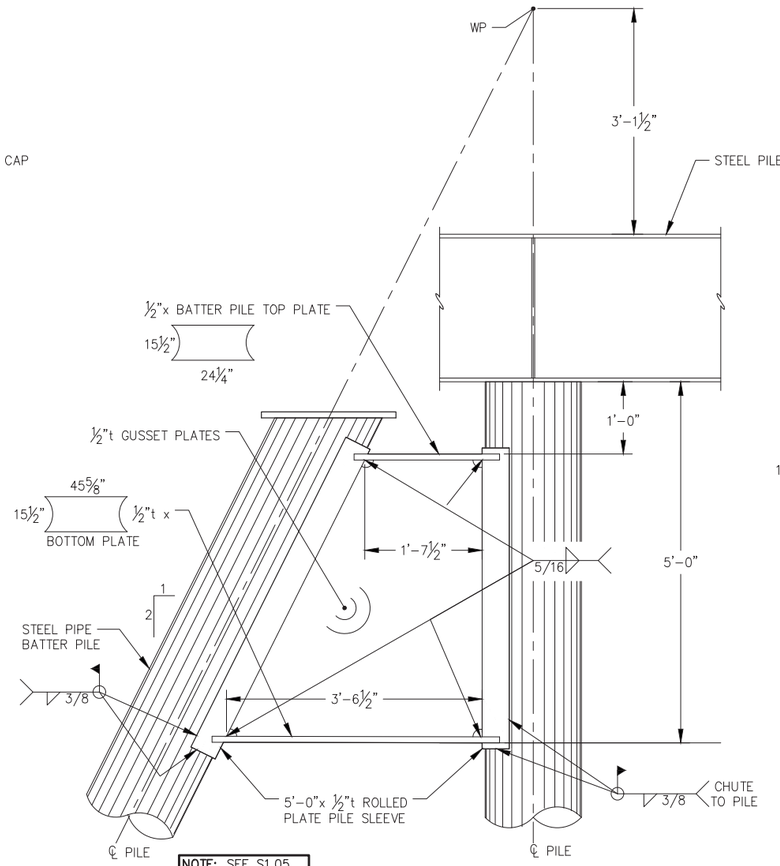

NOTE: SEE S1.05 FOR VERTICAL PILE WELD TO CAP

ELEVATION

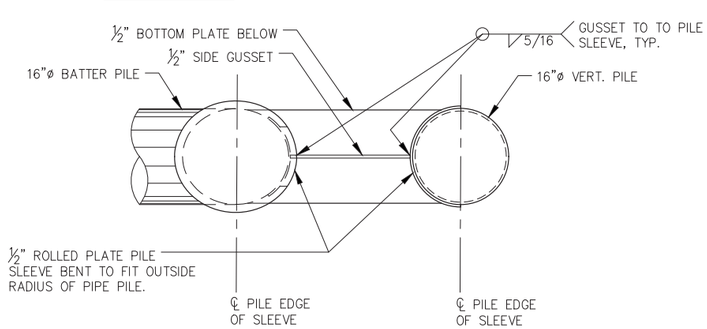

TYPICAL 16" SIDE BATTER PILE CONNECTION
PLAN AT W24 PILE CAP

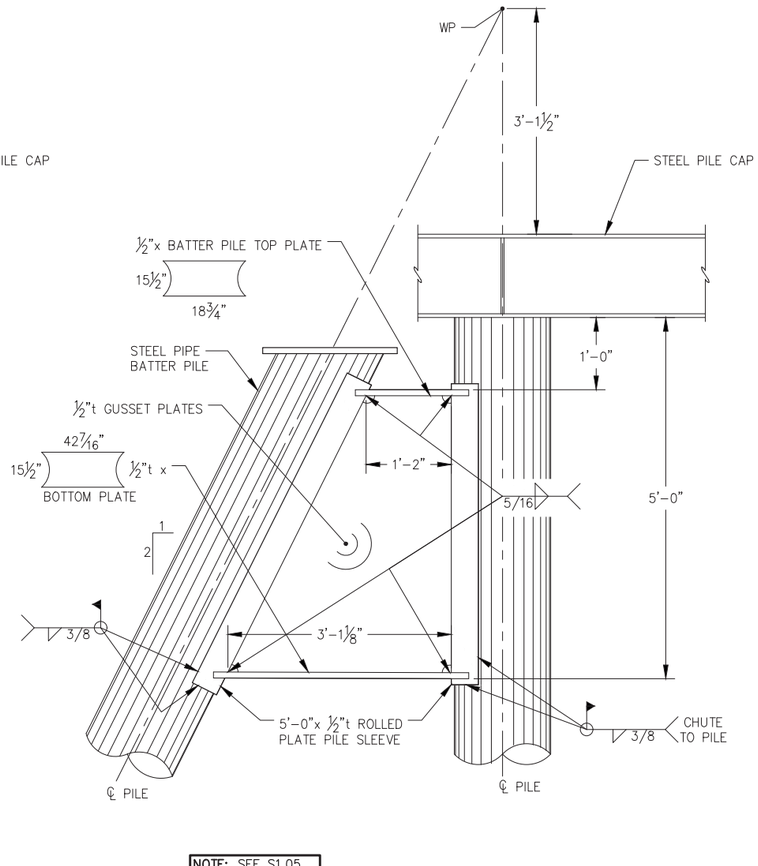

NOTE: SEE S1.05 FOR VERTICAL PILE WELD TO CAP

ELEVATION

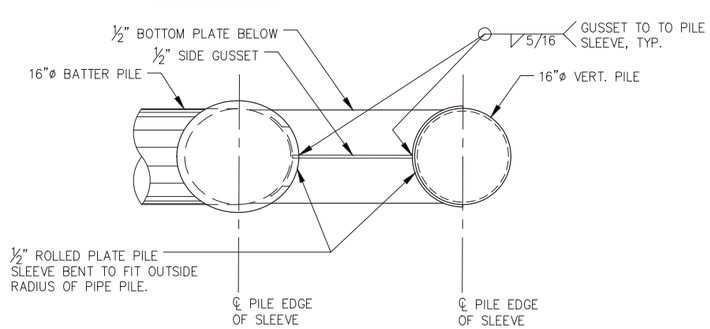

TYPICAL 16" SIDE BATTER PILE CONNECTION
PLAN AT HP14 PILE CAP

REVISIONS

REV.	DATE	DESCRIPTION	DWN.	CKD.	APP.

P N D ENGINEERS, INC.
9360 Glacier Highway Ste 100
Juneau, Alaska 99801
Phone: 907-586-2093
Fax: 907-586-2099
www.pndengineers.com

DESIGN: MDS CHECKED: CRS
DRAWN: KLL APPROVED: CRS
SCALE: NTS
DATE: 5/23/2019

STATE OF ALASKA 49TH Charles R. Somerville CE-8845 REGISTERED PROFESSIONAL ENGINEER

DOWNTOWN WATERFRONT IMPROVEMENTS
PHASE I
CBJ CONTRACT NO. DH19-014

SHEET TITLE:
PILE TYPICAL DETAILS

PND PROJECT NO.: 182045 C.A.N. NO.: AECC250

S1.03

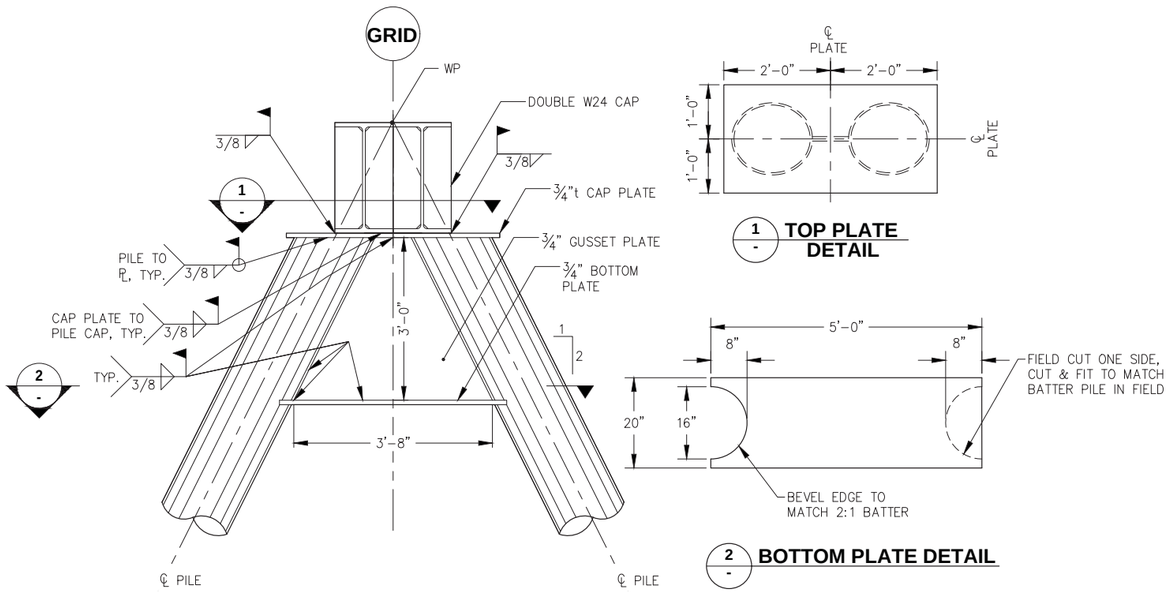

TYPICAL DOUBLE BATTER PILE CONNECTION

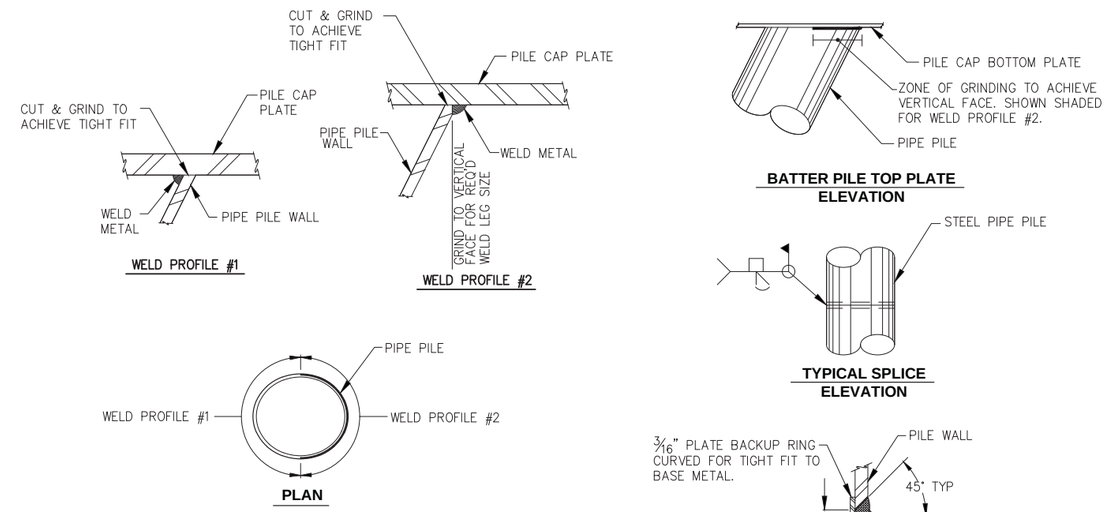

TYPICAL PILE CONNECTION DETAILS

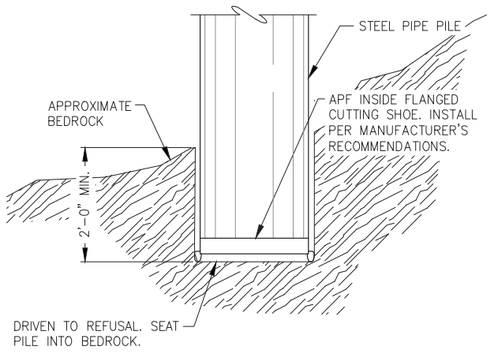

PILE DRIVING TIP DETAIL

REVISIONS

REV.	DATE	DESCRIPTION	DWN.	CKD.	APP.

PND ENGINEERS, INC.
9360 Glacier Highway Ste 100
Juneau, Alaska 99801
Phone: 907-586-2093
Fax: 907-586-2099
www.pndengineers.com

DESIGN: MDS CHECKED: CRS
DRAWN: KLL APPROVED: CRS
SCALE: NTS
DATE: 5/23/2019

STATE OF ALASKA 49TH Charles R. Somerville CE-8845 REGISTERED PROFESSIONAL ENGINEER

DOWNTOWN WATERFRONT IMPROVEMENTS PHASE I
CBJ CONTRACT NO. DH19-014

SHEET TITLE: **PILE TYPICAL DETAILS**

S1.04

PND PROJECT NO.: 182045 C.A.N. NO.: AECC250

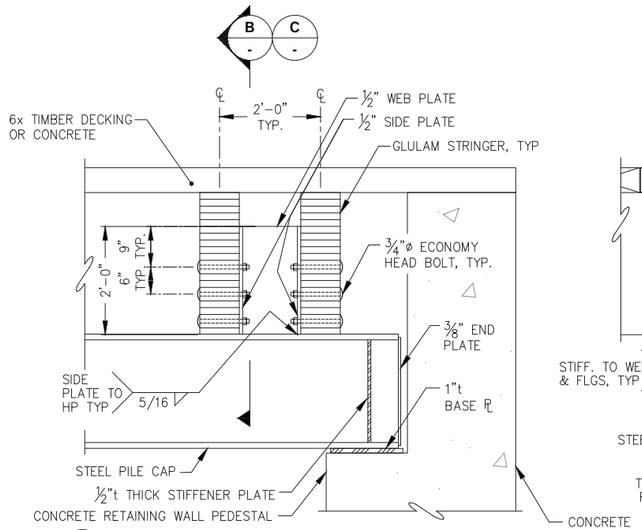

A - TYPICAL STRINGER CONNECTION ELEVATION

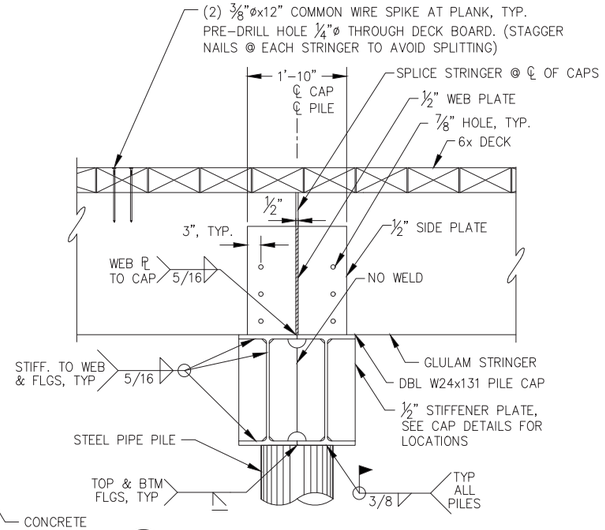

B - TYPICAL PILE CAP SECTION AT TIMBER DECK

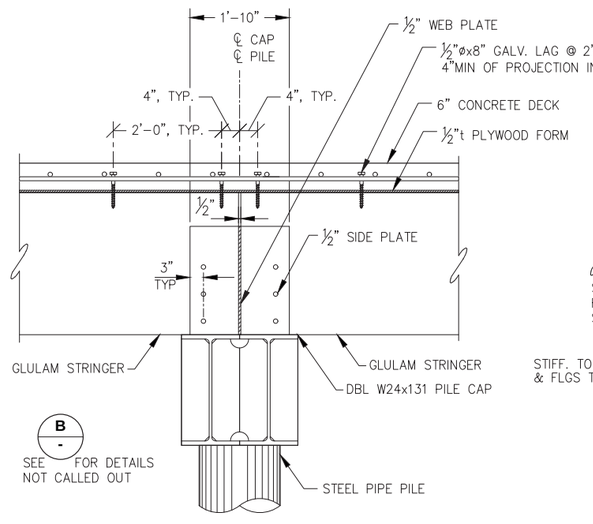

C - TYPICAL PILE CAP SECTION AT CONCRETE DECK

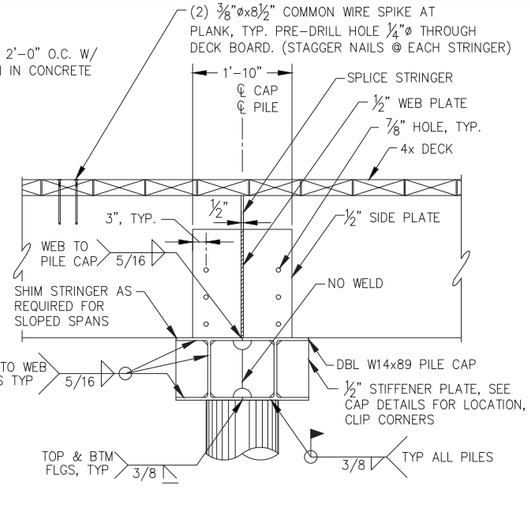

D - TYPICAL PILE CAP DETAIL AT ADA APPROACH RAMP

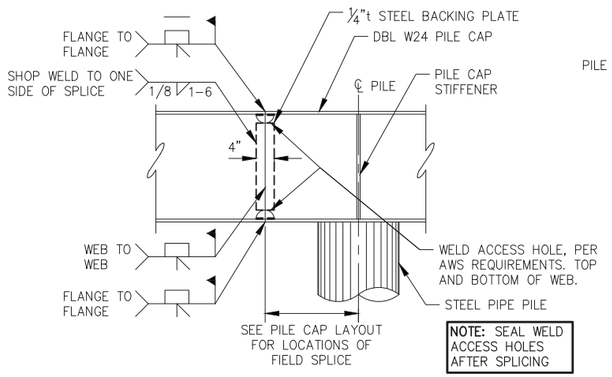

E - TYPICAL PILE CAP FIELD SPLICE DETAIL

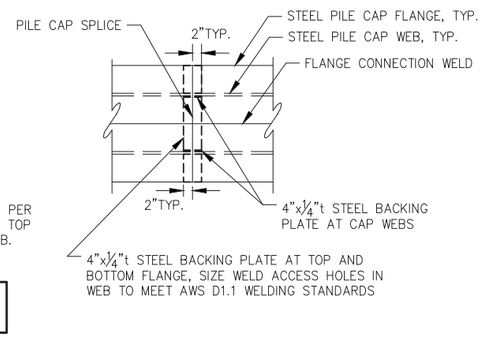

F - TYPICAL STEEL PILE CAP FIELD SPLICE DETAIL

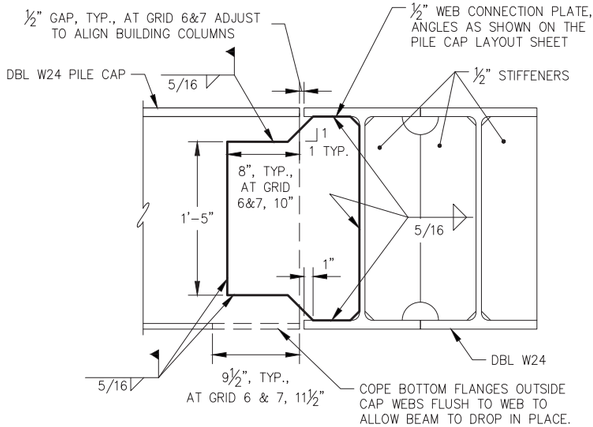

G - TYPICAL PILE CAP CONNECTION DETAIL

NOTE: ℄ NOT REQUIRED AT PILE CAP TO PILE CAP CONNECTIONS.

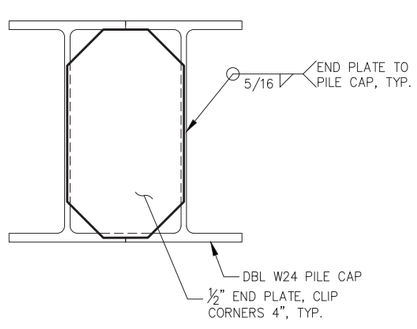

H - TYPICAL PILE END PLATE DETAIL AT DBL W24 PILE CAPS

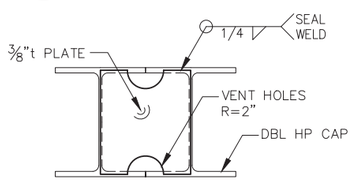

I - PILE CAP END PLATE FOR DOUBLE HP PILE CAPS

REVISIONS

REV.	DATE	DESCRIPTION	DWN.	CKD.	APP.

PND ENGINEERS, INC.
9360 Glacier Highway Ste 100
Juneau, Alaska 99801
Phone: 907-586-2093
Fax: 907-586-2099
www.pndengineers.com

DESIGN: MDS CHECKED: CRS
DRAWN: KLL APPROVED: CRS
SCALE: NTS
DATE: 5/23/2019

STATE OF ALASKA 49 TH — Charles R. Somerville CE-8845 — REGISTERED PROFESSIONAL ENGINEER

DOWNTOWN WATERFRONT IMPROVEMENTS PHASE I
CBJ CONTRACT NO. DH19-014

SHEET TITLE: **TYPICAL DOCK FRAMING DETAILS**

PND PROJECT NO.: 182045 C.A.N. NO.: AECC250

S1.05

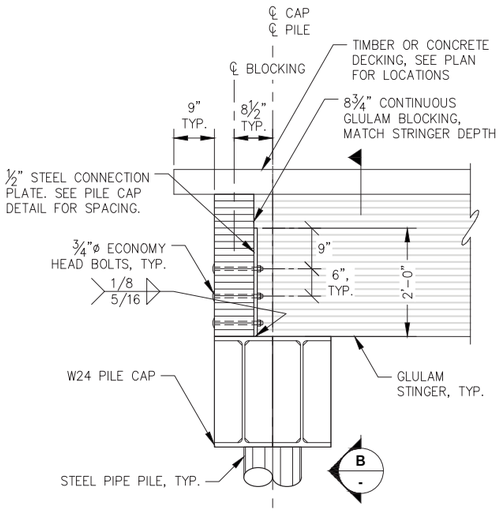

A - TYPICAL BLOCKING CONNECTION PLATE AT GRID G PILE CAP

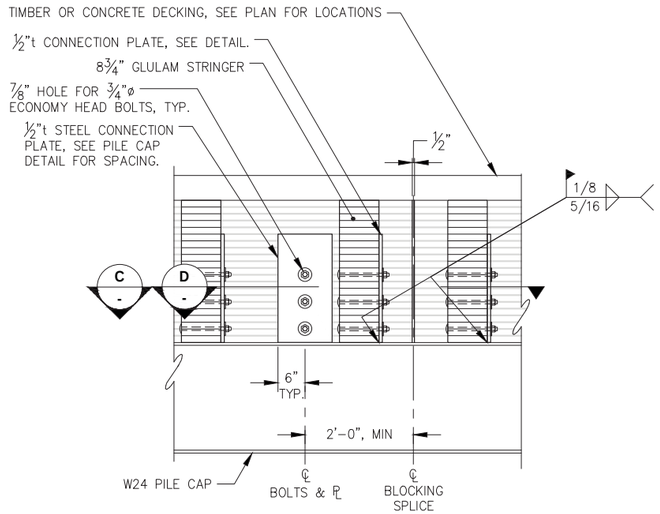

B - TYPICAL STRINGER CONNECTION ELEVATION AT DIAGONAL GLULAM BLOCKING

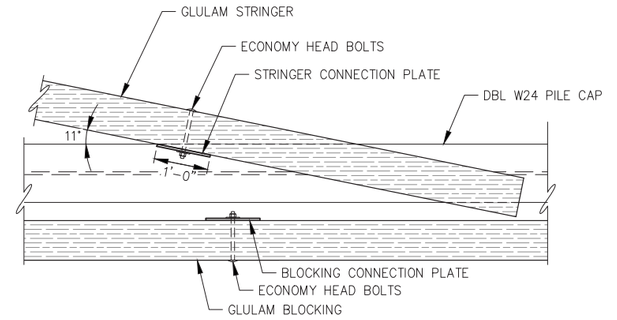

C - TYPICAL ANGLE CONNECTION PLATE AT CONTINUOUS GLULAM BLOCKING TYPE 1 (11°)

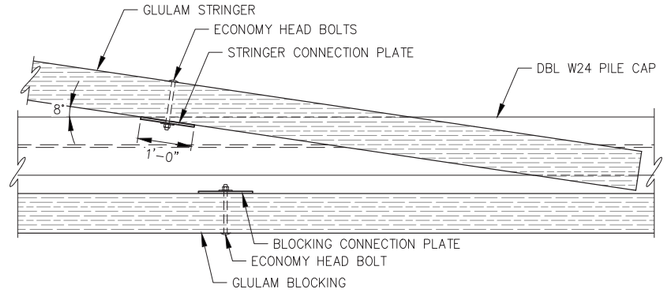

D - TYPICAL ANGLE CONNECTION PLATE AT CONTINUOUS GLULAM BLOCKING TYPE 2 (8°)

E - STRINGER TO CONCRETE WALL CONNECTION SECTION

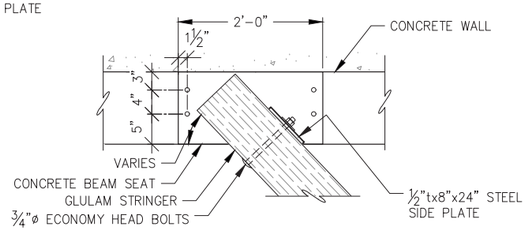

F - STRINGER TO CONCRETE WALL CONNECTION PLAN

CITY & BOROUGH OF JUNEAU — DOCKS & HARBORS

REVISIONS

REV.	DATE	DESCRIPTION	DWN.	CKD.	APP.

PND ENGINEERS, INC.
9360 Glacier Highway Ste 100
Juneau, Alaska 99801
Phone: 907-586-2093
Fax: 907-586-2099
www.pndengineers.com

DESIGN: MDS CHECKED: CRS
DRAWN: KLL APPROVED: CRS
SCALE: NTS
DATE: 5/23/2019

STATE OF ALASKA — 49TH — Charles R. Somerville CE-8845 — REGISTERED PROFESSIONAL ENGINEER

DOWNTOWN WATERFRONT IMPROVEMENTS PHASE I
CBJ CONTRACT NO. DH19-014

SHEET TITLE: **TYPICAL DOCK FRAMING DETAILS**

PND PROJECT NO.: 182045 C.A.N. NO.: AECC250

S1.06

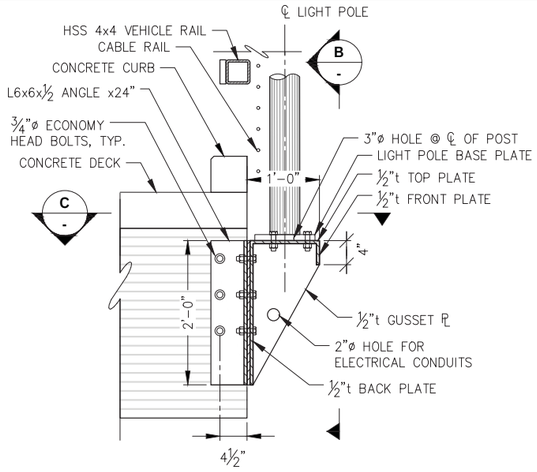

A - TYPICAL LIGHT POLE BRACKET TYPE 1 SECTION END STRINGER

(3) EACH, SEE CIVIL FOR LOCATIONS

NOTE:
USE SIMILAR BRACKET AND BOLT PATTERN FOR LIGHT POLE MOUNT @ CONCRETE RETAINING WALL, MOUNT BACK PLATE FLUSH WITH CONCRETE WALL AND EMBED ANCHOR BOLTS 8" MIN.

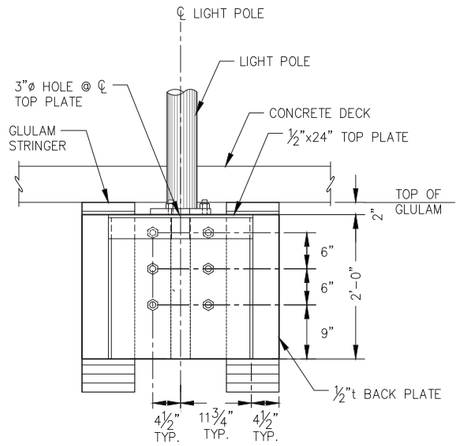

B - LIGHT POLE BRACKET DETAIL END STRINGER

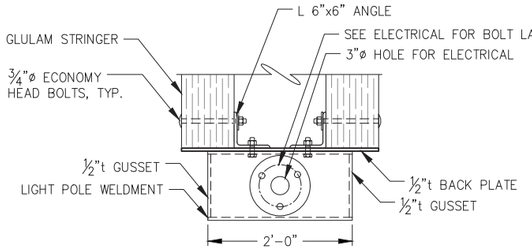

C - TYPICAL LIGHT POLE BRACKET PLAN END STRINGER

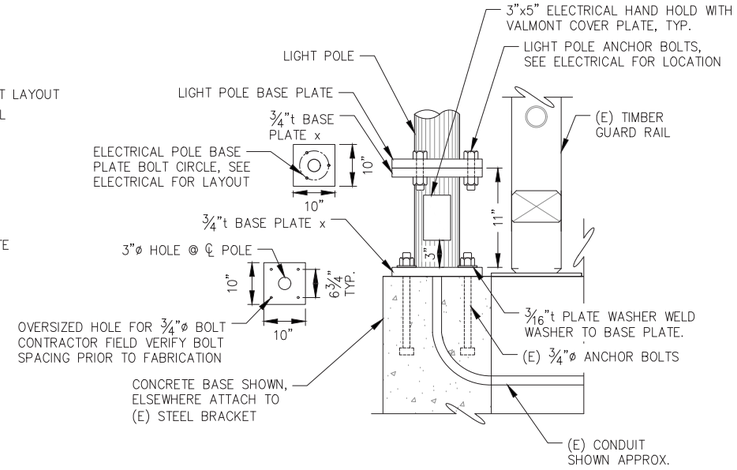

D - LIGHT POLE BRACKET TYPE 2 EXTENSION

(13) EACH, SEE ELECTRICAL FOR LOCATIONS

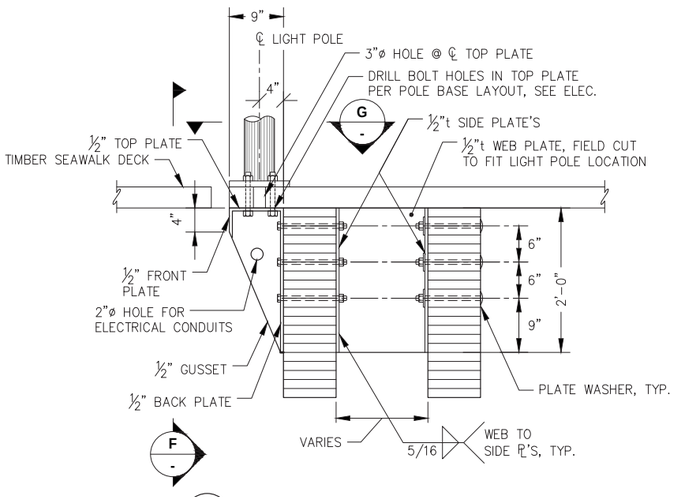

E - LIGHT POLE BRACKET TYPE 3 DETAIL STRINGER SIDE MOUNT

(6) EACH, SEE CIVIL FOR LOCATIONS

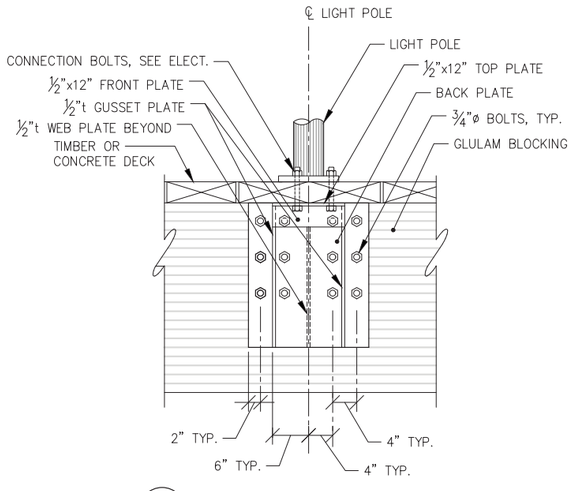

F - TYPICAL LIGHT POLE BRACKET SECTION STRINGER SIDE MOUNT

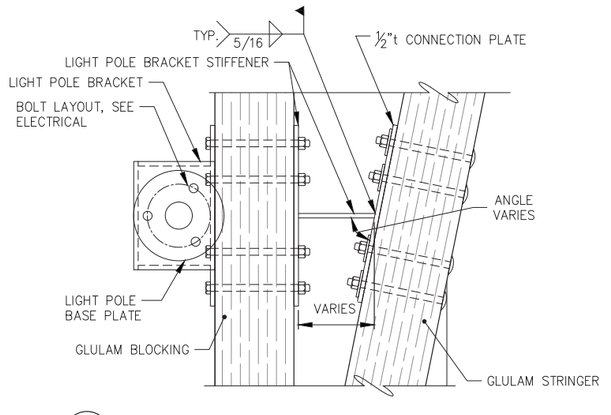

G - TYPICAL LIGHT POLE BRACKET STRINGER

REVISIONS

REV.	DATE	DESCRIPTION	DWN.	CKD.	APP.

PND ENGINEERS, INC.
9360 Glacier Highway Ste 100
Juneau, Alaska 99801
Phone: 907-586-2093
Fax: 907-586-2099
www.pndengineers.com

DESIGN: MDS CHECKED: CRS
DRAWN: KLL APPROVED: CRS
SCALE: NTS
DATE: 5/23/2019

STATE OF ALASKA 49 TH Charles R. Somerville CE-8845 REGISTERED PROFESSIONAL ENGINEER

DOWNTOWN WATERFRONT IMPROVEMENTS PHASE I
CBJ CONTRACT NO. DH19-014

SHEET TITLE: **LIGHT POLE TYPICAL DETAILS**

PND PROJECT NO.: 182045 C.A.N. NO.: AECC250

S1.07

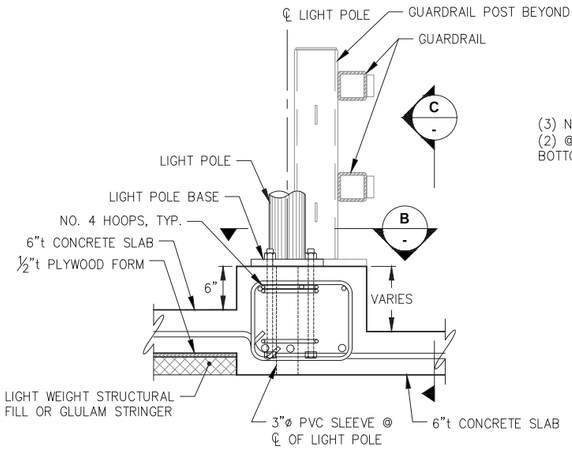

A - LIGHT POLE BRACKET TYPE 4 SECTION ON CURB

(2) REQUIRED SEE CIVIL FOR LOCATION

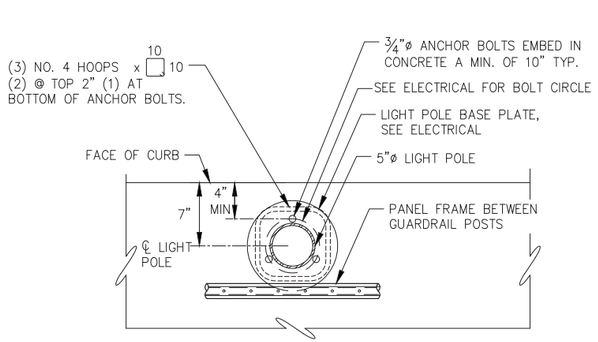

B - LIGHT POLE BRACKET PARTIAL PLAN AT CURB

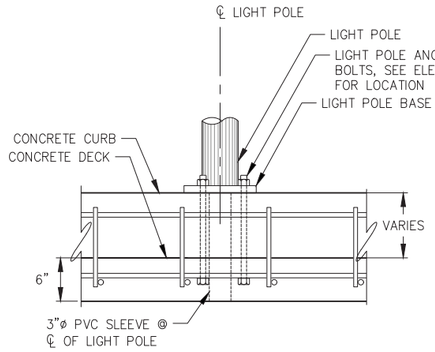

C - LIGHT POLE BRACKET DETAIL ON CONCRETE CURB

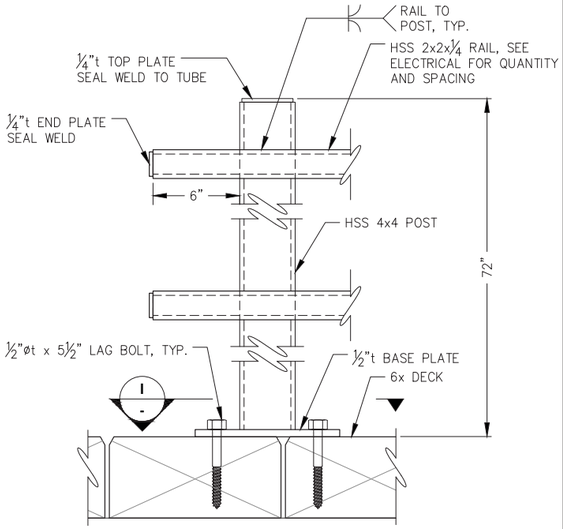

D - TYPICAL ELECTRICAL RACK POST ELEVATION

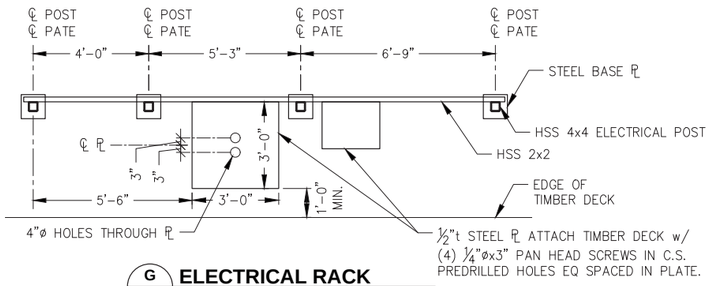

G - ELECTRICAL RACK PARTIAL FRAMING PLAN

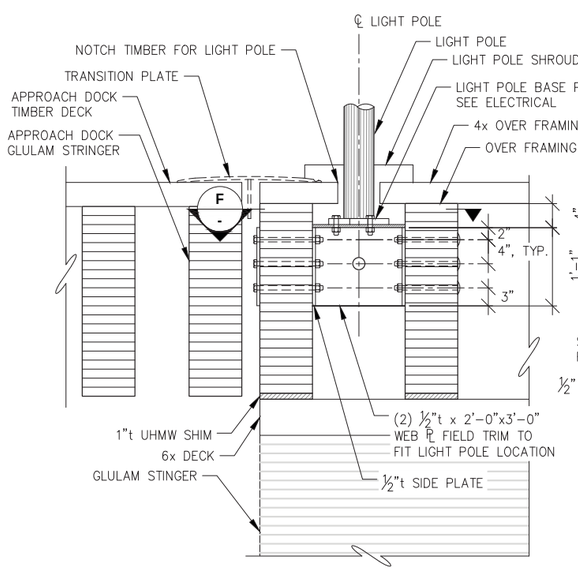

E - LIGHT POLE BRACKET TYPE 5 DOCK AND OVERFRAMING

(1) REQUIRED SEE CIVIL FOR LOCATION

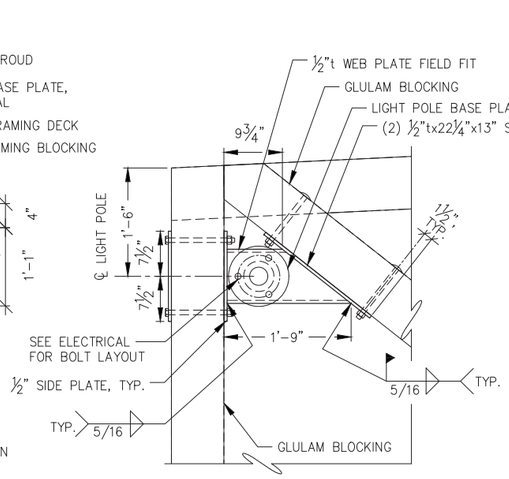

F - LIGHT POLE CONNECTION DETAIL AT OVER FRAMING AND APPROACH DOCK

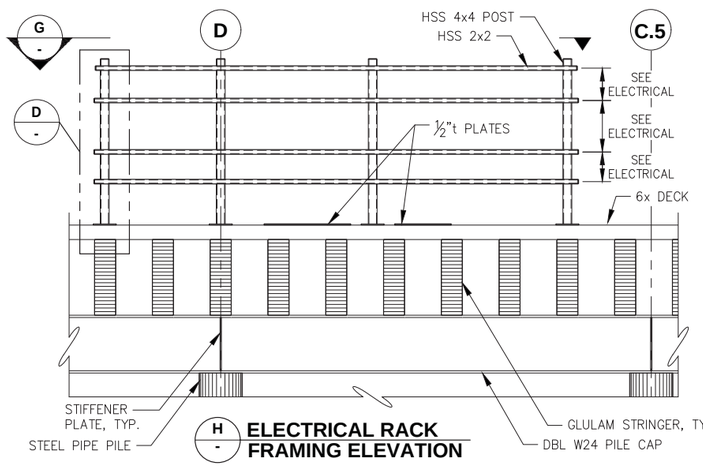

H - ELECTRICAL RACK FRAMING ELEVATION

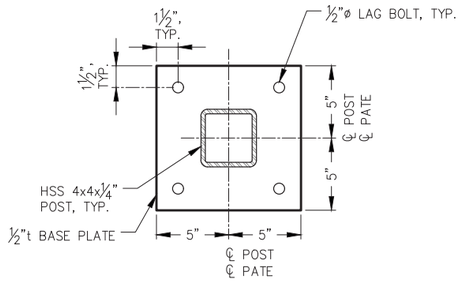

I - ELECTRICAL RACK BASE PLATE

REVISIONS

REV.	DATE	DESCRIPTION	DWN.	CKD.	APP.

CITY & BOROUGH OF JUNEAU DOCKS & HARBORS

PND ENGINEERS, INC.
9360 Glacier Highway Ste 100
Juneau, Alaska 99801
Phone: 907-586-2093
Fax: 907-586-2099
www.pndengineers.com

DESIGN: MDS CHECKED: CRS
DRAWN: KLL APPROVED: CRS
SCALE: NTS

STATE OF ALASKA 49TH Charles R. Somerville CE-8845 REGISTERED PROFESSIONAL ENGINEER
DATE: 5/23/2019

DOWNTOWN WATERFRONT IMPROVEMENTS PHASE I
CBJ CONTRACT NO. DH19-014

SHEET TITLE:
LIGHT POLE TYPICAL DETAILS

PND PROJECT NO.: 182045 C.A.N. NO.: AECC250

S1.08

WALL LAYOUT AND ELEVATIONS

POINT	NORTHING	EASTING	ELEV. FINISHED GRADE	DESCRIPTION
1	2361822.39	2544111.55	28.52	OUTSIDE FACE OF WALL AT END
2	2361816.99	2544103.94	28.52	℄ PILE
3	2361734.44	2544158.68	28.52	℄ PILE
4	2361724.07	2544202.55	28.52	OUTSIDE FACE OF WALL AT ANGLE POINT
5	2361701.39	2544218.78	28.52	℄ PILE
6	2361687.18	2544288.97	28.52	℄ PILE
7	2361592.70	2544348.24	27.17	℄ PILE
8	2361600.84	2544365.92	27.17	OUTSIDE FACE OF WALL AT END

NOTE:
FINISHED GRADE= TOP OF SLAB/TIMBER DECK AT ℄ CONCRETE WALL.

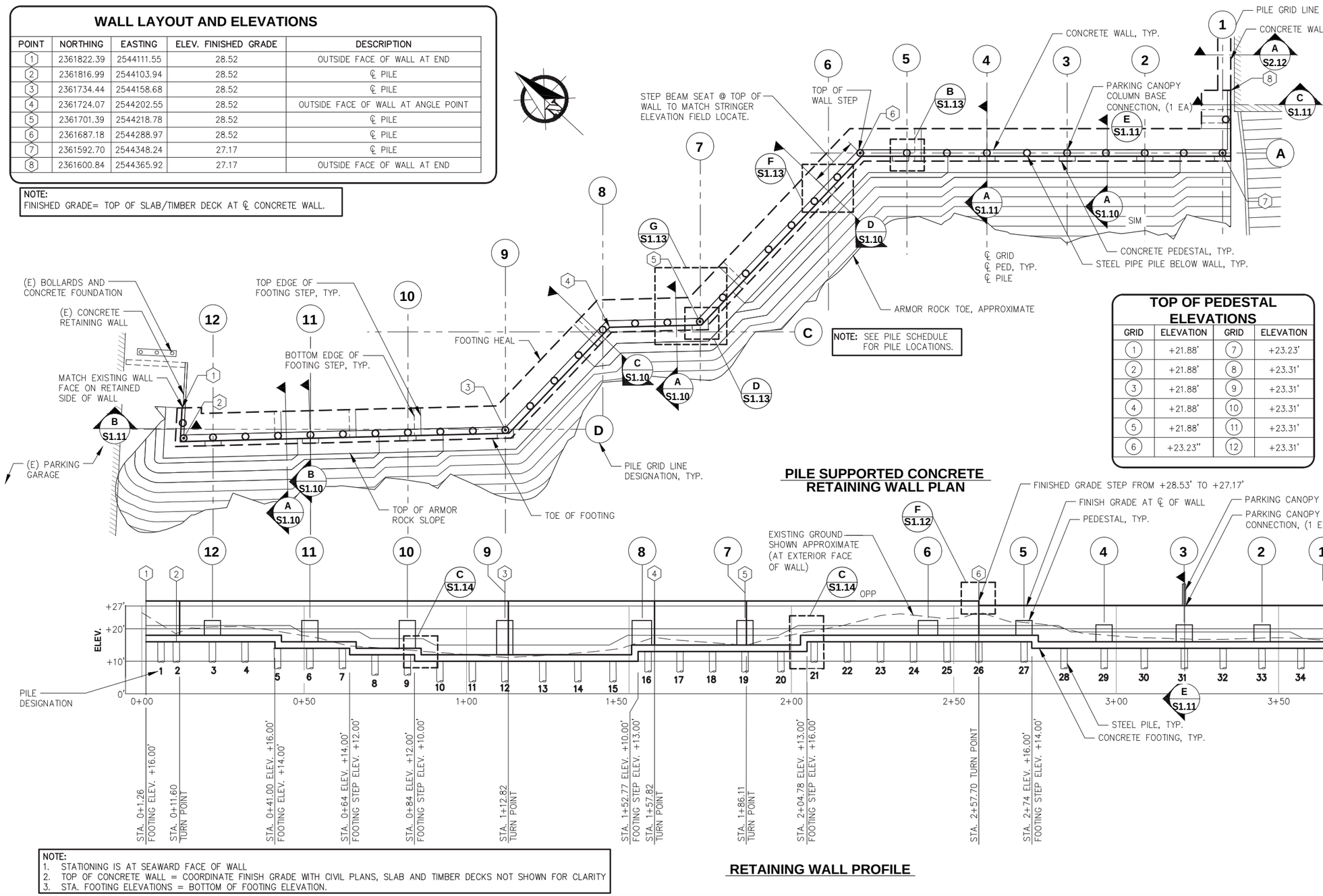

NOTE:
1. SEE S2.01 FOR WALL MOUNTED RAILING POST LOCATIONS.
2. SEE F/S1.11 FOR ANCHOR BOLT LAYOUT FOR GUARDRAIL POST CONNECTION.

NOTE: SEE PILE SCHEDULE FOR PILE LOCATIONS.

TOP OF PEDESTAL ELEVATIONS

GRID	ELEVATION	GRID	ELEVATION
1	+21.88'	7	+23.23'
2	+21.88'	8	+23.31'
3	+21.88'	9	+23.31'
4	+21.88'	10	+23.31'
5	+21.88'	11	+23.31'
6	+23.23"	12	+23.31'

PILE SUPPORTED CONCRETE RETAINING WALL PLAN

RETAINING WALL PROFILE

NOTE:
1. STATIONING IS AT SEAWARD FACE OF WALL
2. TOP OF CONCRETE WALL = COORDINATE FINISH GRADE WITH CIVIL PLANS, SLAB AND TIMBER DECKS NOT SHOWN FOR CLARITY
3. STA. FOOTING ELEVATIONS = BOTTOM OF FOOTING ELEVATION.

NOTE: OS INDICATES OWNER SUPPLIED MATERIALS

CITY & BOROUGH OF JUNEAU DOCKS & HARBORS

REVISIONS

REV.	DATE	DESCRIPTION	DWN.	CKD.	APP.

PND ENGINEERS, INC.
9360 Glacier Highway Ste 100
Juneau, Alaska 99801
Phone: 907-586-2093
Fax: 907-586-2099
www.pndengineers.com

DESIGN: MDS CHECKED: CRS
DRAWN: KLL APPROVED: CRS
SCALE: SCALE IN FEET 0 15 30 FT.

STATE OF ALASKA 49TH
Charles R. Somerville CE-8845
REGISTERED PROFESSIONAL ENGINEER
DATE: 5/23/2019

DOWNTOWN WATERFRONT IMPROVEMENTS PHASE I
CBJ CONTRACT NO. DH19-014

SHEET TITLE:
CONCRETE RETAINING WALL PLAN AND PROFILE

PND PROJECT NO.: 182045 C.A.N. NO.: AECC250

S1.09

Attachment G – BLD2019-0321

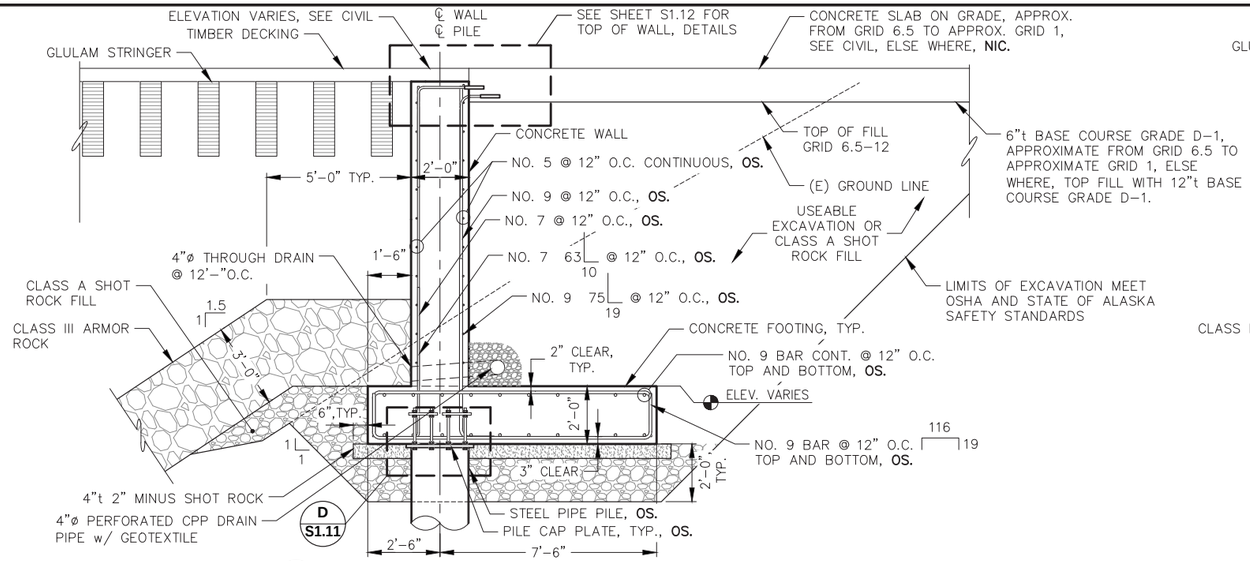

A S1.09 **TYPICAL RETAINING WALL SECTION**

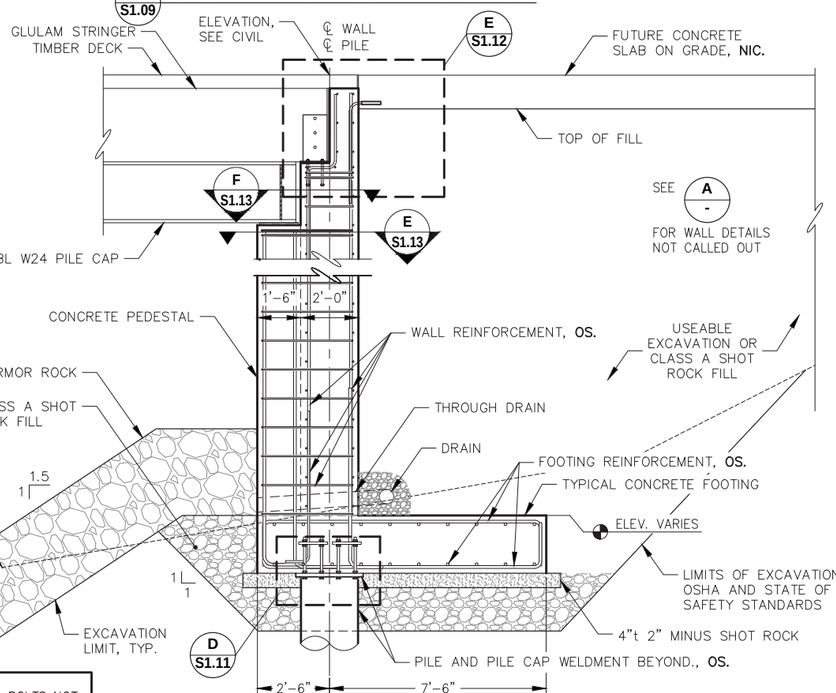

NOTE:
1. PEDESTAL ANCHOR BOLTS NOT SHOWN.
2. SEE SHEET S1.13 FOR PEDESTAL DETAILS NOT CALLED OUT

C S1.09 **RETAINING WALL SECTION WITH PEDESTAL**

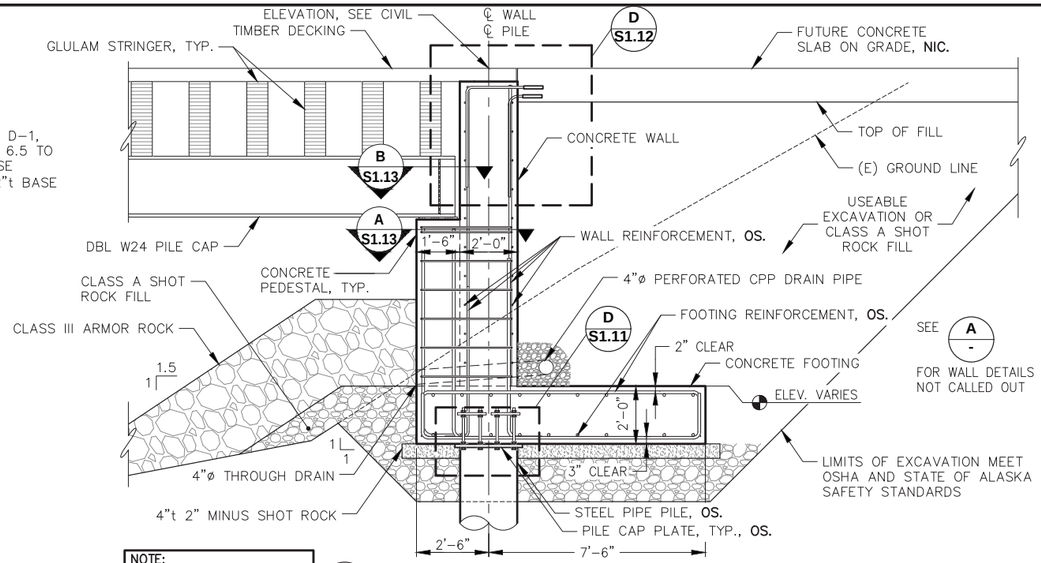

NOTE:
1. PEDESTAL ANCHOR BOLTS NOT SHOWN.
2. SEE SHEET S1.13 FOR PEDESTAL DETAILS NOT CALLED OUT

B S1.09 **RETAINING WALL SECTION WITH PEDESTAL**

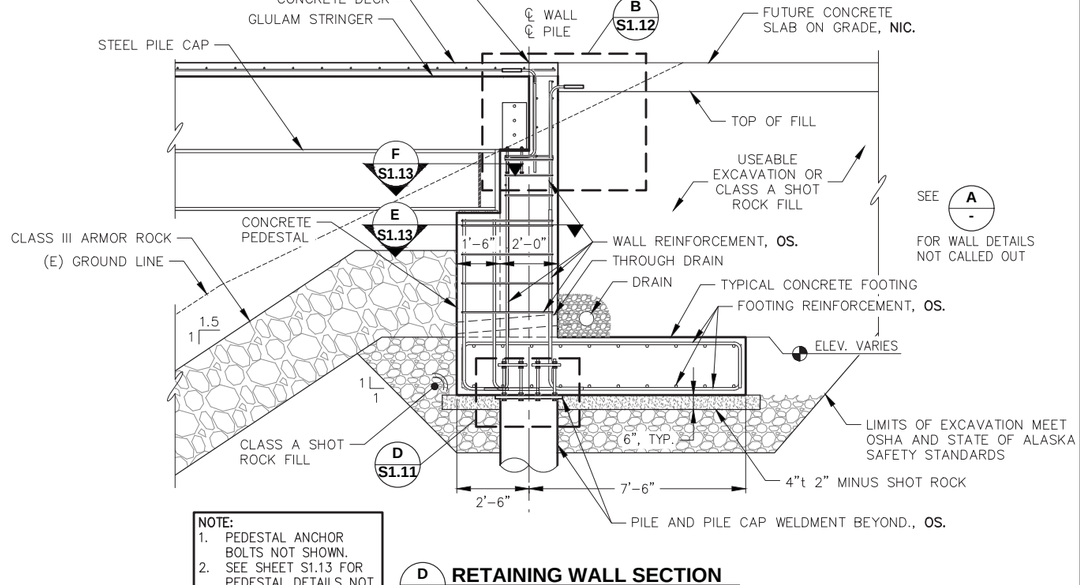

NOTE:
1. PEDESTAL ANCHOR BOLTS NOT SHOWN.
2. SEE SHEET S1.13 FOR PEDESTAL DETAILS NOT CALLED OUT

D S1.09 **RETAINING WALL SECTION WITH PEDESTAL**

NOTE: OS. INDICATES OWNER SUPPLIED MATERIALS

CITY & BOROUGH OF JUNEAU DOCKS & HARBORS

REVISIONS

REV.	DATE	DESCRIPTION	DWN.	CKD.	APP.

PND ENGINEERS, INC.
9360 Glacier Highway Ste 100
Juneau, Alaska 99801
Phone: 907-586-2093
Fax: 907-586-2099
www.pndengineers.com

DESIGN: MDS CHECKED: CRS
DRAWN: KLL APPROVED: CRS
SCALE: NTS

STATE OF ALASKA 49TH Charles R. Somerville CE-8845 REGISTERED PROFESSIONAL ENGINEER
DATE: 5/20/2019

DOWNTOWN WATERFRONT IMPROVEMENTS PHASE I
CBJ CONTRACT NO. DH19-014

SHEET TITLE: **CONCRETE RETAINING WALL SECTIONS**

PND PROJECT NO.: 182045 C.A.N. NO.: AECC250

S1.10

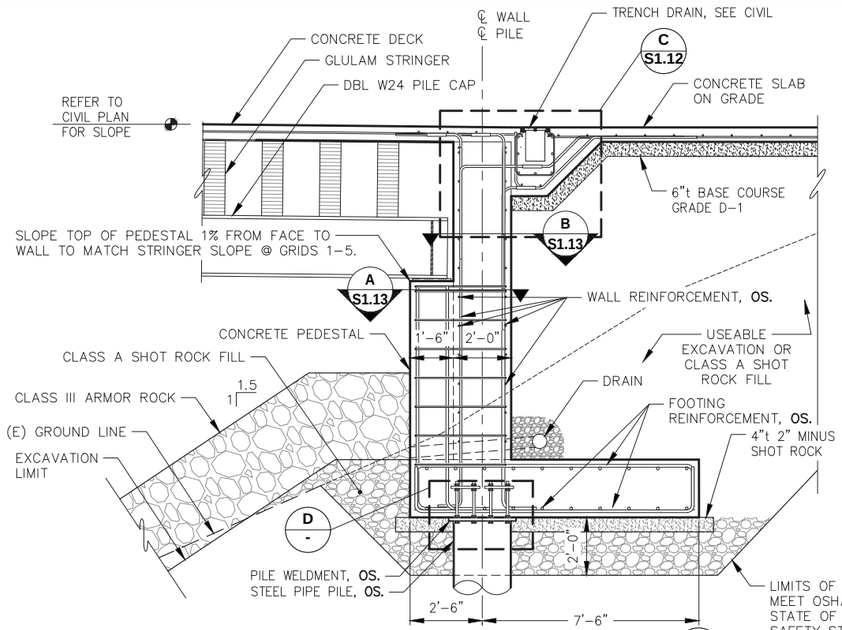

A S1.09 **RETAINING WALL SECTION**

NOTE:
1. PEDESTAL ANCHOR BOLTS NOT SHOWN.
2. SEE SHEET S1.13 FOR PEDESTAL DETAILS NOT CALLED OUT

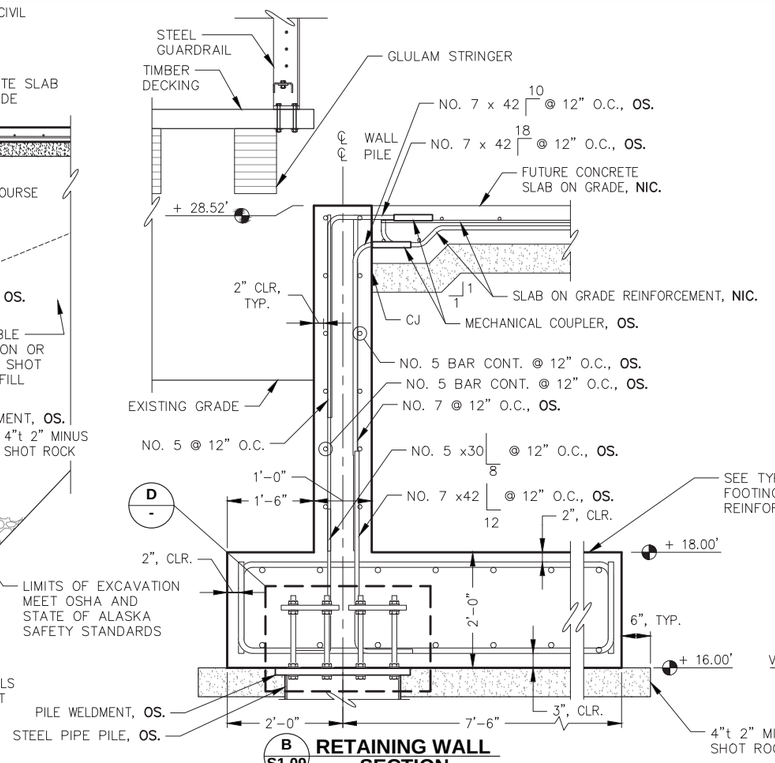

B S1.09 **RETAINING WALL SECTION**

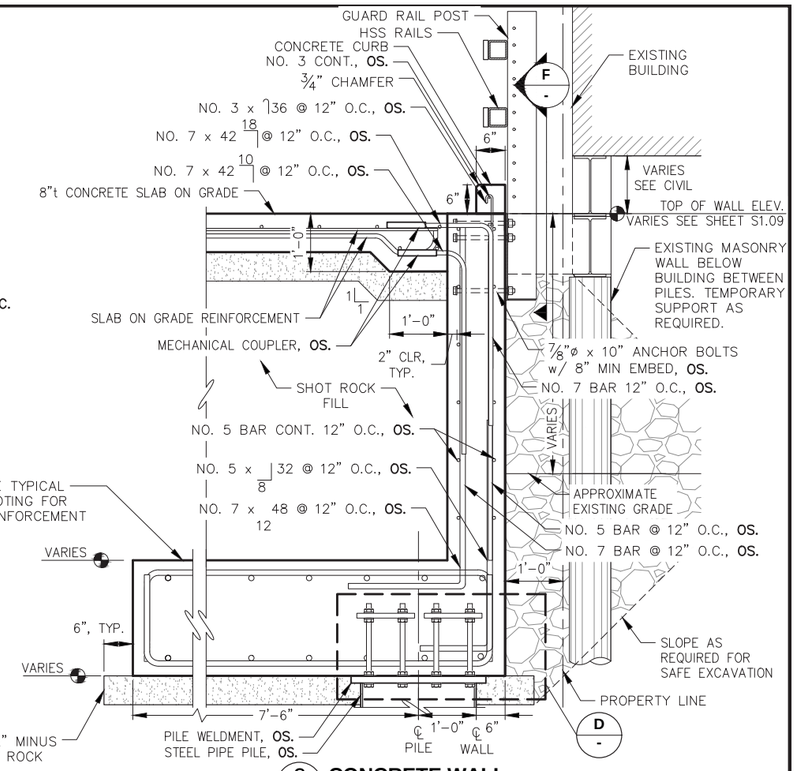

C S1.09 **CONCRETE WALL SECTION**

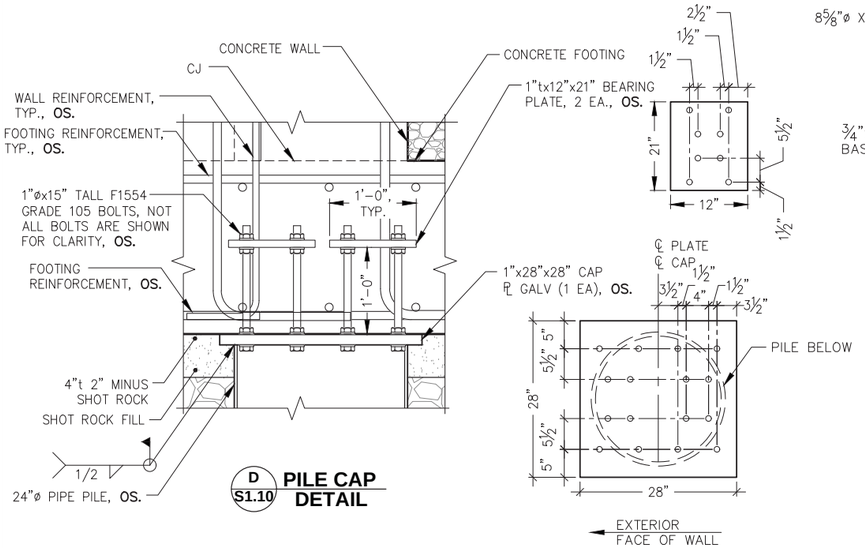

D S1.10 **PILE CAP DETAIL**

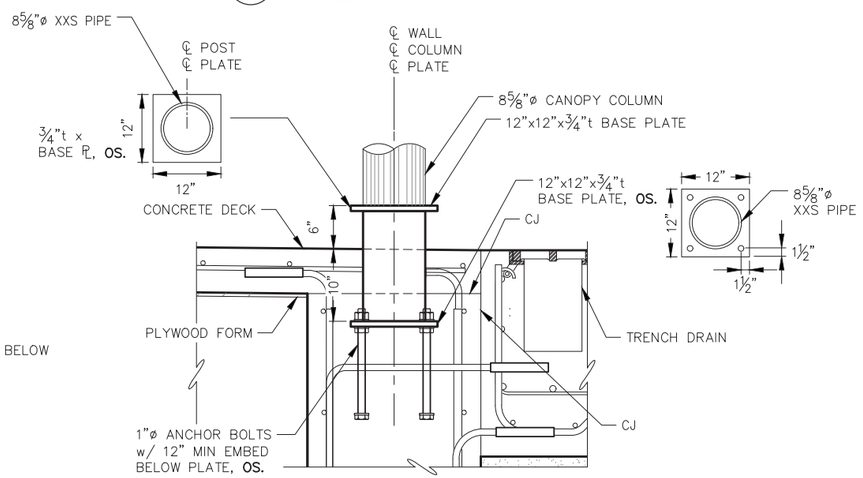

E S1.09 **CANOPY COLUMN BASE CONNECTION DETAIL** (1 EA REQ'D), OS.

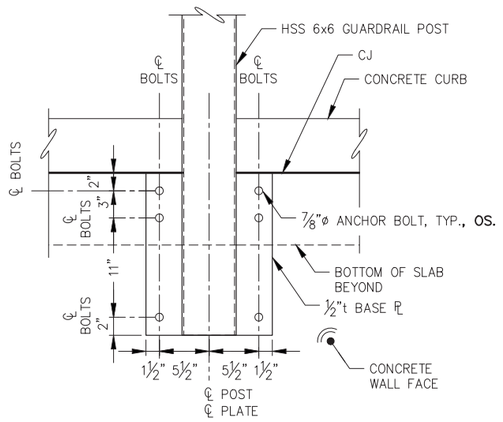

F - **VEHICLE RAIL POST CONNECTION DETAIL**

NOTE: OS. INDICATES OWNER SUPPLIED MATERIALS

REVISIONS

REV.	DATE	DESCRIPTION	DWN.	CKD.	APP.

P N D ENGINEERS, INC.
9360 Glacier Highway Ste 100
Juneau, Alaska 99801
Phone: 907-586-2093
Fax: 907-586-2099
www.pndengineers.com

DESIGN: MDS CHECKED: CRS
DRAWN: KLL APPROVED: CRS
SCALE: NTS

STATE OF ALASKA 49TH Charles R. Somerville CE-8845 REGISTERED PROFESSIONAL ENGINEER
DATE: 5/23/2019

DOWNTOWN WATERFRONT IMPROVEMENTS PHASE I
CBJ CONTRACT NO. DH19-014

SHEET TITLE: **CONCRETE RETAINING WALL SECTIONS AND DETAILS**

PND PROJECT NO.: 182045 C.A.N. NO.: AECC250

S1.11

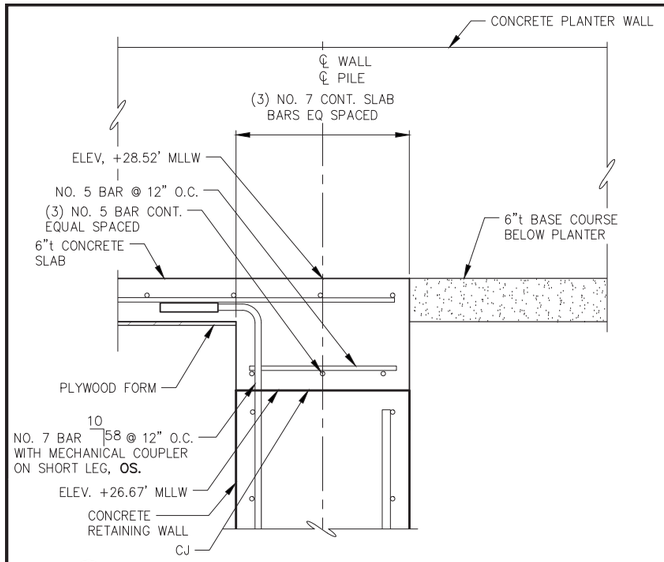

A / - TOP OF WALL CONCRETE DETAIL
STA. 2+57.70 TO STA. 2+62.16 END OF TRENCH DRAIN

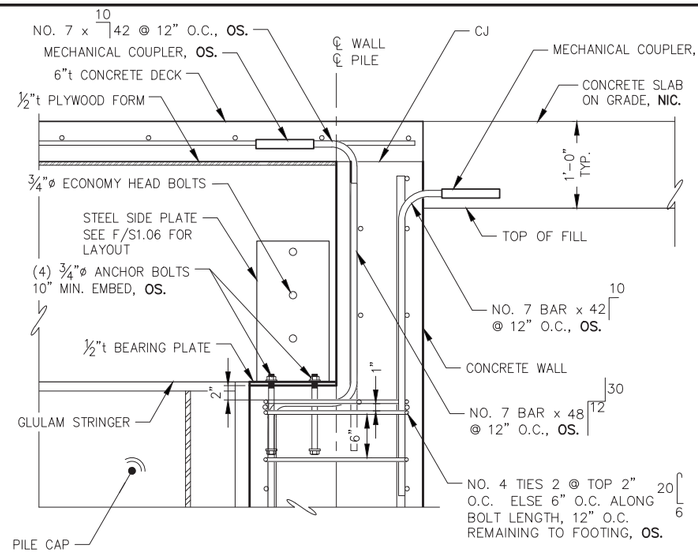

B / S1.10 TOP OF WALL DETAIL
CONCRETE DECK W/ BEAM SEAT

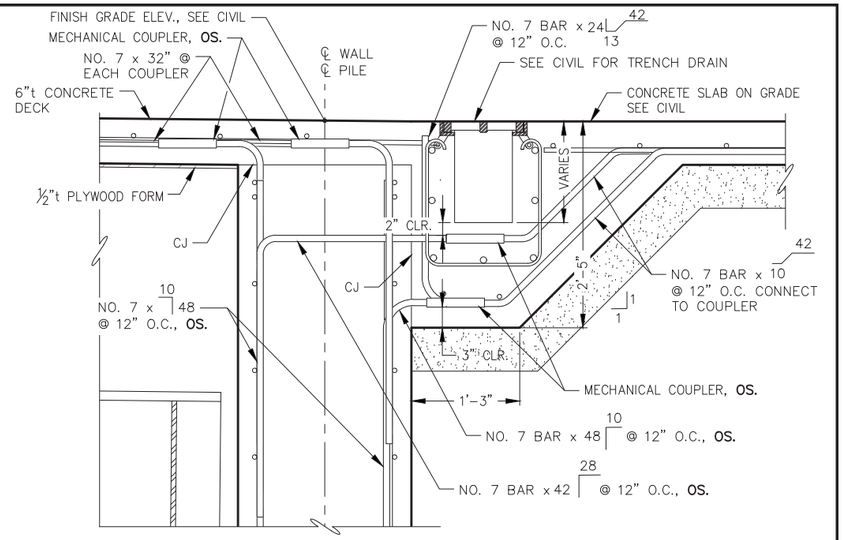

C / S1.11 TOP OF WALL DETAIL
CONCRETE DECK WITHOUT BEAM SEAT

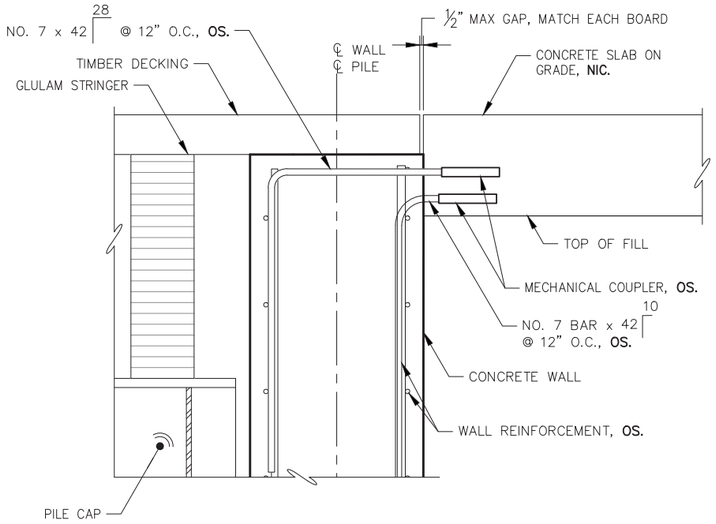

D / S1.10 TOP OF WALL DETAIL
TIMBER DECK WITHOUT BEAM SEAT

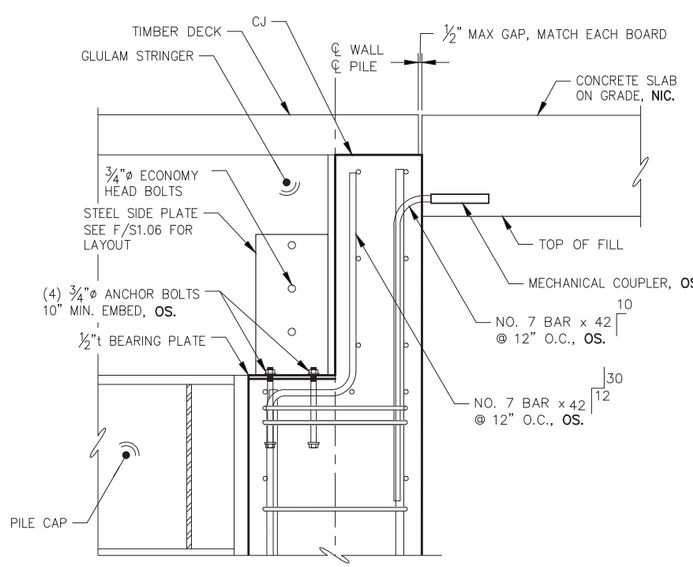

E / S1.10 TOP OF WALL DETAIL
TIMBER DECK WITH BEAM SEAT

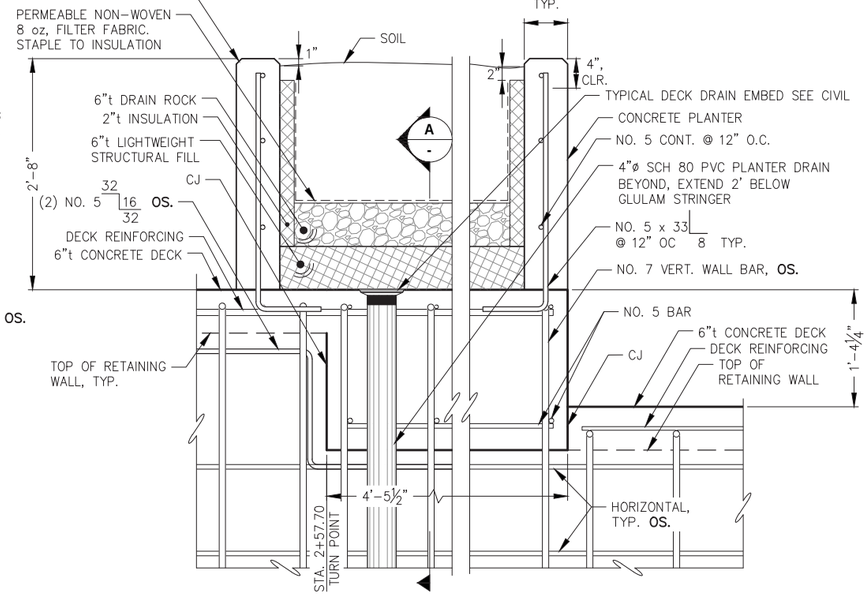

F / S1.09 TOP OF WALL STEP DETAIL
AND PLATER SECTION

NOTE: OS. INDICATES OWNER SUPPLIED MATERIALS

REVISIONS

REV.	DATE	DESCRIPTION	DWN.	CKD.	APP.

PND ENGINEERS, INC.
9360 Glacier Highway Ste 100
Juneau, Alaska 99801
Phone: 907-586-2093
Fax: 907-586-2099
www.pndengineers.com

STATE OF ALASKA 49 TH — Charles R. Somerville CE-8845 — REGISTERED PROFESSIONAL ENGINEER

DESIGN: MDS CHECKED: CRS
DRAWN: KLL APPROVED: CRS
SCALE: NTS
DATE: 5/23/2019

DOWNTOWN WATERFRONT IMPROVEMENTS PHASE I
CBJ CONTRACT NO. DH19-014

SHEET TITLE: **CONCRETE RETAINING WALL DETAILS**

PND PROJECT NO.: 182045 C.A.N. NO.: AECC250

S1.12

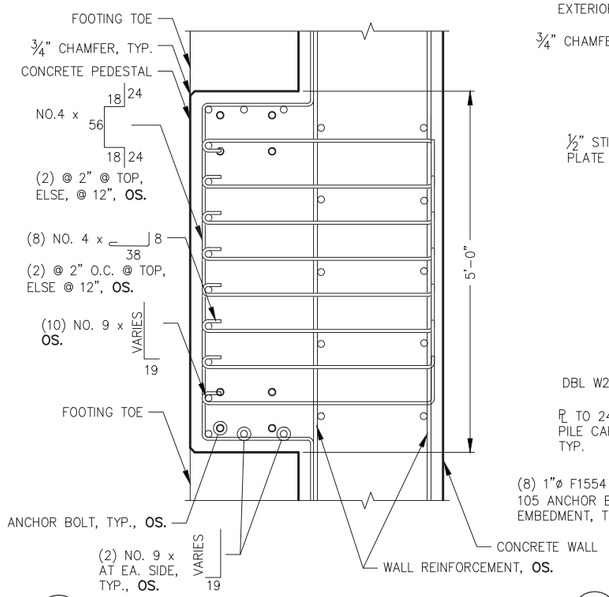

A S1.10 TYPICAL PILE CAP SUPPORT PEDESTAL

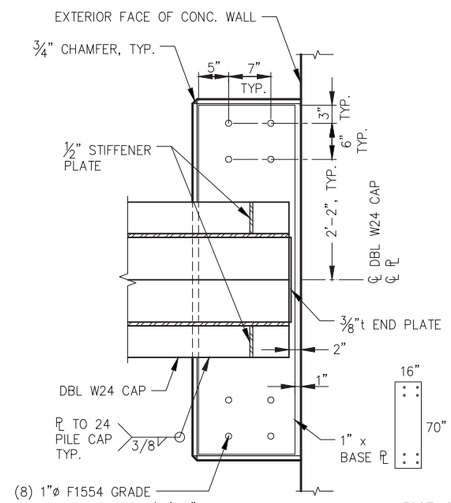

B S1.09 S1.10 PILE CAP BASE PLATE

NOTE: PILE CAP ANGLE TO ℄ OF PEDESTAL = ±2° FROM PERPENDICULAR TO THE PEDESTAL

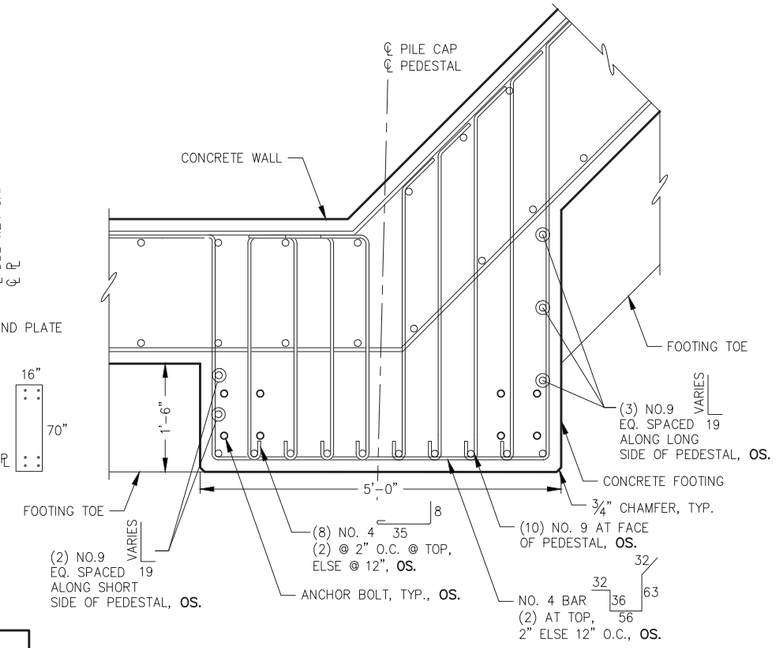

C S1.09 PILE CAP SUPPORT PEDESTAL AT WALL TURNING POINT

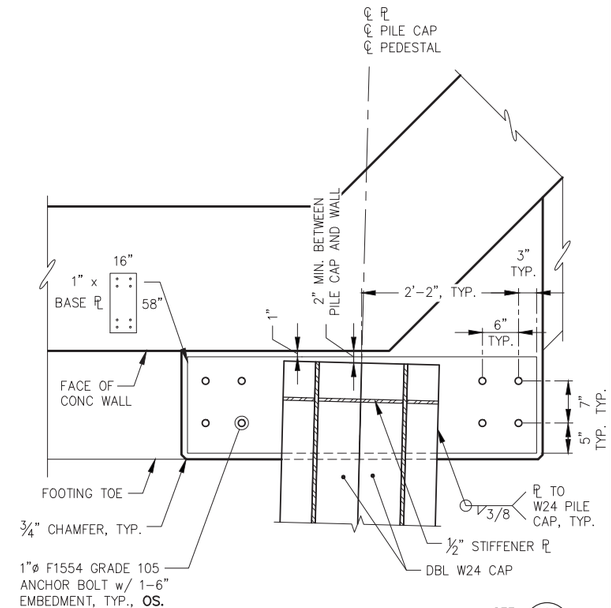

SEE C - FOR PEDESTAL REINFORCEMENT

D S1.09 PILE CAP BASE PLATE AT WALL TURNING POINT

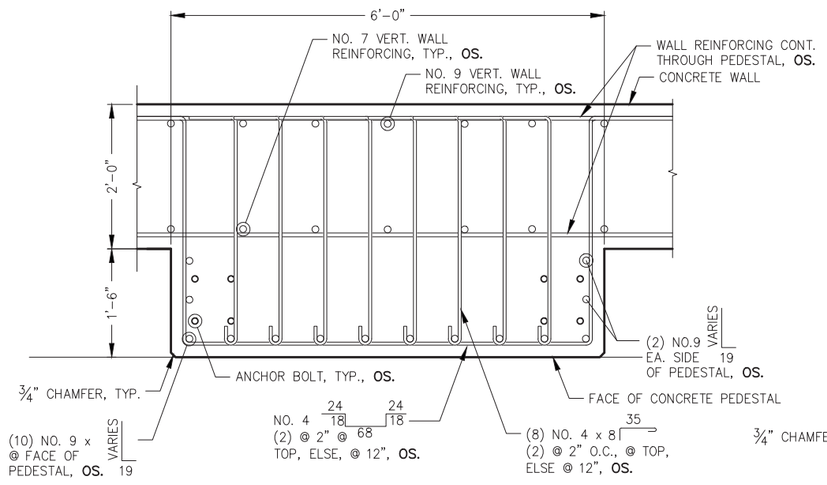

E S1.10 PILE CAP SUPPORT PEDESTAL AT ANGLED WALL

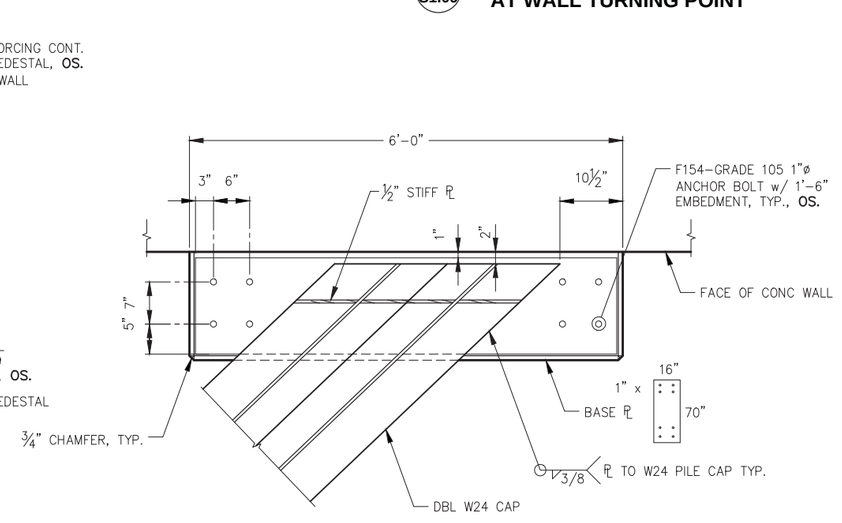

F S1.09 S1.10 PILE CAP BASE PLATE

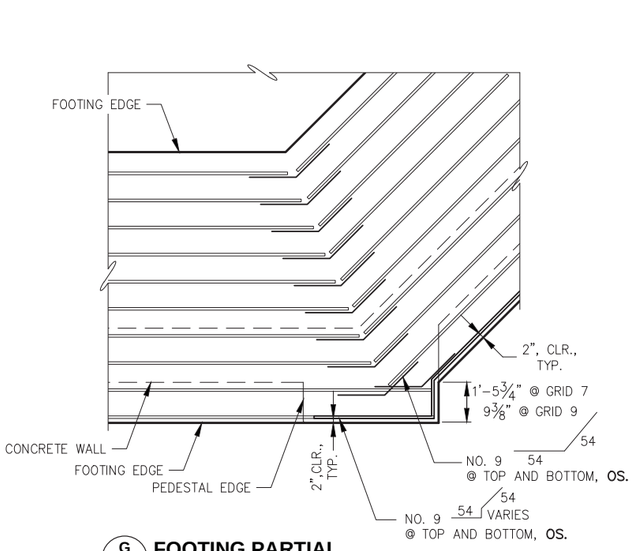

G S1.09 FOOTING PARTIAL PLAN AT ANGLE POINT PEDESTALS

NOTE: OS. INDICATES OWNER SUPPLIED MATERIALS

CITY & BOROUGH OF JUNEAU DOCKS & HARBORS

REVISIONS

REV.	DATE	DESCRIPTION	DWN.	CKD.	APP.

PND ENGINEERS, INC.
9360 Glacier Highway Ste 100
Juneau, Alaska 99801
Phone: 907-586-2093
Fax: 907-586-2099
www.pndengineers.com

STATE OF ALASKA 49TH — Charles R. Somerville CE-8845 — REGISTERED PROFESSIONAL ENGINEER

DESIGN: MDS CHECKED: CRS
DRAWN: KLL APPROVED: CRS
SCALE: NTS
DATE: 5/23/2019

DOWNTOWN WATERFRONT IMPROVEMENTS PHASE I
CBJ CONTRACT NO. DH19-014

SHEET TITLE: **CONCRETE RETAINING WALL PEDESTAL DETAILS**

PND PROJECT NO.: 182045 C.A.N. NO.: AECC250

S1.13

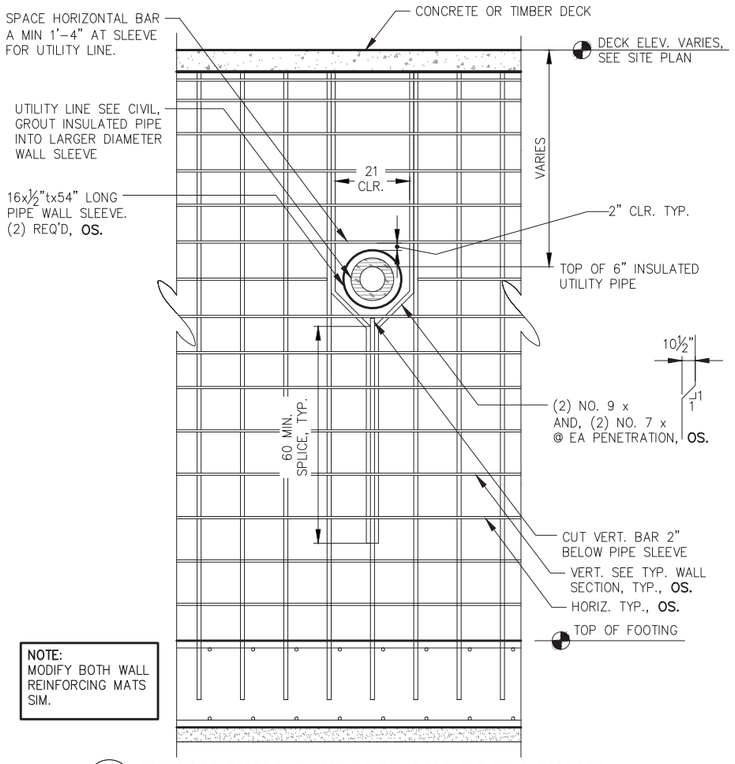

NOTE:
MODIFY BOTH WALL REINFORCING MATS SIM.

A - TYPICAL WALL PENETRATION REBAR LAYOUT FOR PENETRATIONS 16" DIA.

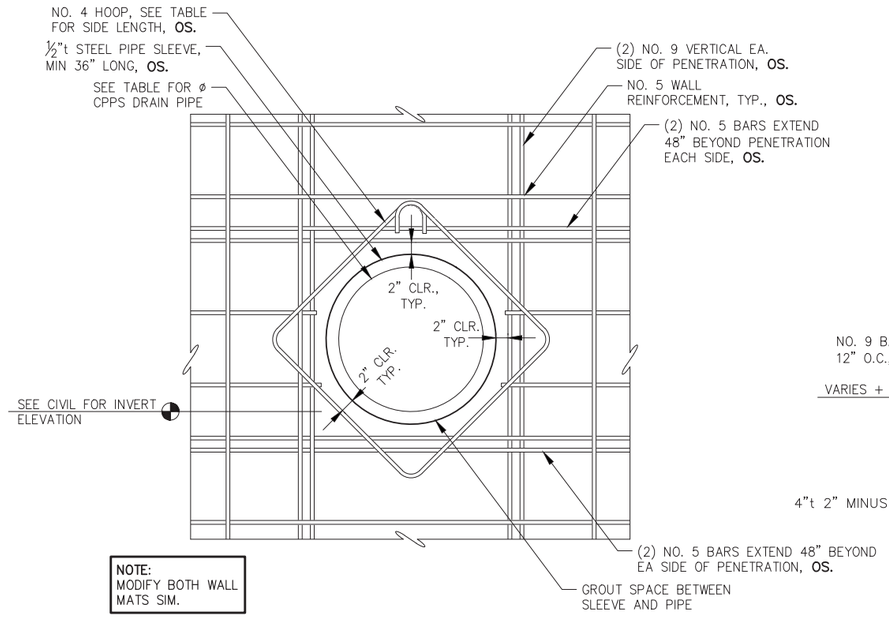

NOTE:
MODIFY BOTH WALL MATS SIM.

B - TYPICAL WALL PENETRATION REBAR LAYOUT FOR PENETRATIONS GREATER THAN 16" DIA

NOTE:

PIPE Ø	PIPE OD	SLEEVE OD	HOOP DIAMETER	QUANTITY REQ'D
24"	28.2"	30"	34"x34"	1
18"	21.8"	24"	28"x28"	1

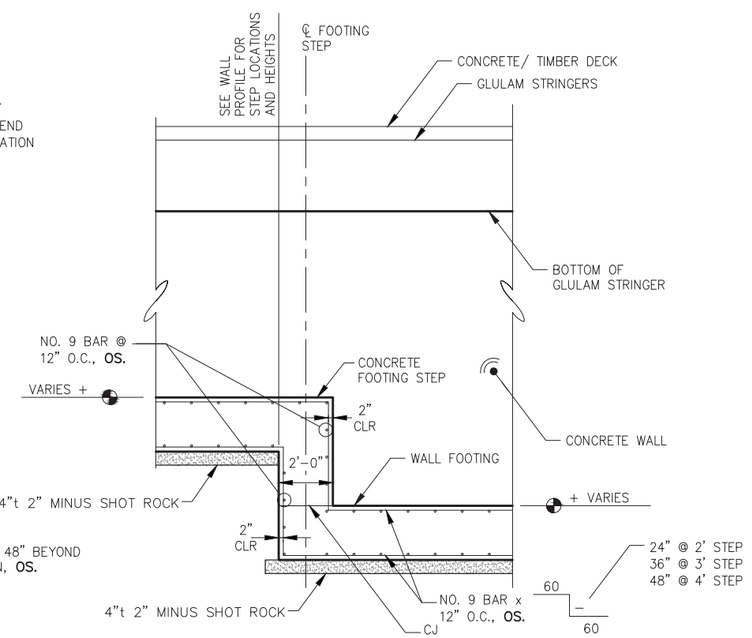

C S1.09 TYPICAL FOOTING STEP

NOTE:
1. COORDINATE w/ ELECTRICAL FOR CONDUIT PENETRATIONS.
2. SLEEVE ELECTRICAL CONDUITS w/ 4"ø PVC SCHEDULE 40 PIPE. ANGLE PIPE THOUGH WALL TO MATCH CONDUIT ANGLE. MAINTAIN A MINIMUM OF 1.5" OF CONCRETE COVER BETWEEN SLEEVE AND REINFORCEMENT.

NOTE: OS. INDICATES OWNER SUPPLIED MATERIALS

CITY & BOROUGH OF JUNEAU — DOCKS & HARBORS

REVISIONS

REV.	DATE	DESCRIPTION	DWN.	CKD.	APP.

PND ENGINEERS, INC.
9360 Glacier Highway Ste 100
Juneau, Alaska 99801
Phone: 907-586-2093
Fax: 907-586-2099
www.pndengineers.com

DESIGN: MDS CHECKED: CRS
DRAWN: KLL APPROVED: CRS
SCALE: NTS
DATE: 5/23/2019

STATE OF ALASKA 49TH — Charles R. Somerville CE-8845 — REGISTERED PROFESSIONAL ENGINEER

DOWNTOWN WATERFRONT IMPROVEMENTS PHASE I
CBJ CONTRACT NO. DH19-014

SHEET TITLE: **CONCRETE RETAINING WALL DETAILS**

PND PROJECT NO.: 182045 C.A.N. NO.: AECC250

S1.14

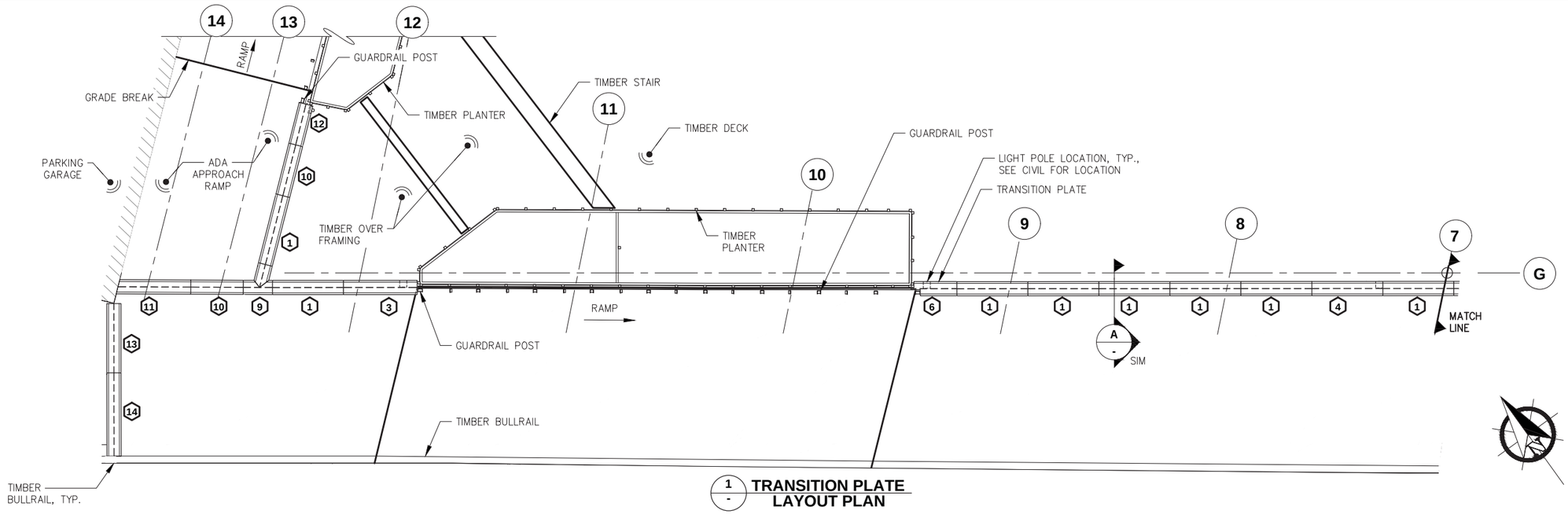

1 / - TRANSITION PLATE LAYOUT PLAN

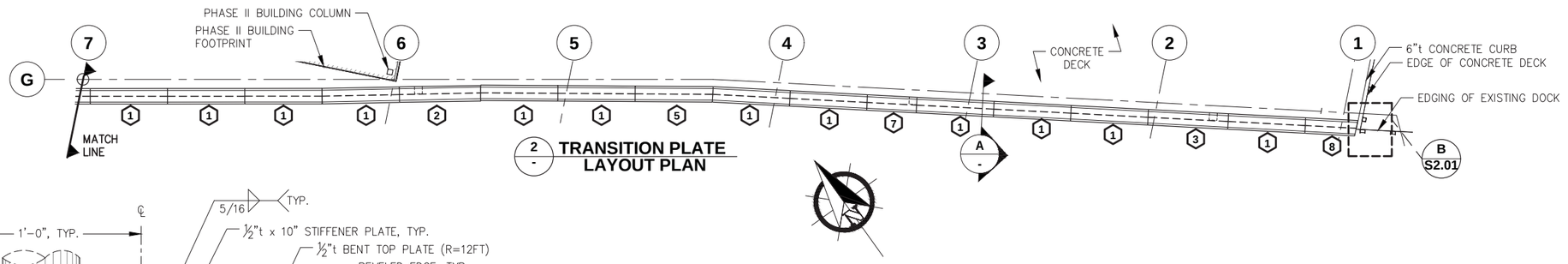

2 / - TRANSITION PLATE LAYOUT PLAN

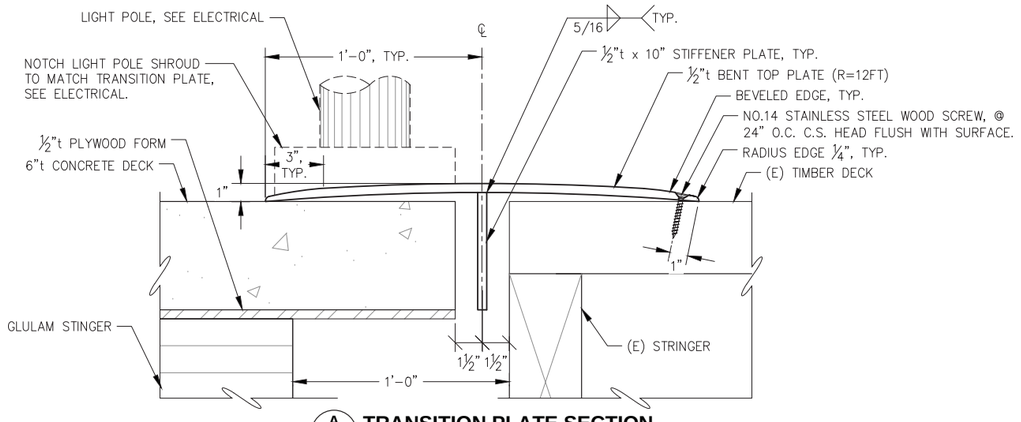

A / - TRANSITION PLATE SECTION
NTS

NOTE:
1. ⬡ # INDICATES PLATE DESIGNATION
2. PLATE EDGES ARE 90° UNLESS NOTED OTHERWISE
3. FIELD MEASURE ALL FINAL NOTCH LOCATIONS PRIOR TO FABRICATION.

REVISIONS

REV.	DATE	DESCRIPTION	DWN.	CKD.	APP.

PND ENGINEERS, INC.
9360 Glacier Highway Ste 100
Juneau, Alaska 99801
Phone: 907-586-2093
Fax: 907-586-2099
www.pndengineers.com

DESIGN: MDS CHECKED: CRS
DRAWN: KLL APPROVED: CRS
SCALE: SCALE IN FEET 0 8 16 FT.
DATE: 5/23/2019

STATE OF ALASKA 49TH Charles R. Somerville CE-8845 REGISTERED PROFESSIONAL ENGINEER

DOWNTOWN WATERFRONT IMPROVEMENTS PHASE I
CBJ CONTRACT NO. DH19-014

SHEET TITLE:
TRANSITION PLATE PARTIAL PLAN AND SECTION

S1.15

PND PROJECT NO.: 182045 C.A.N. NO.: AECC250

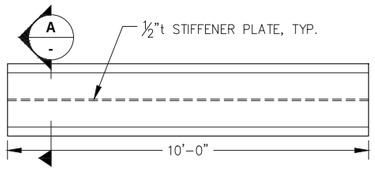

TRANSITION PLATE PLAN TYPE 1
NTS

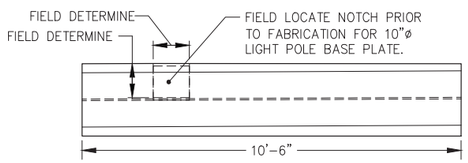

TRANSITION PLATE PLAN TYPE 2
NTS

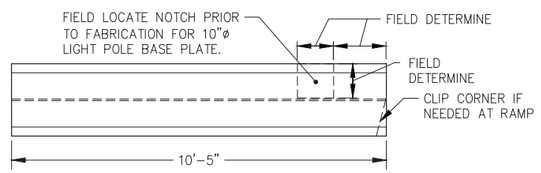

TRANSITION PLATE PLAN TYPE 3
NTS

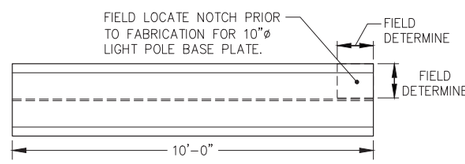

TRANSITION PLATE PLAN TYPE 4
NTS

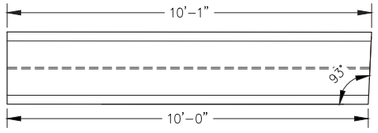

TRANSITION PLATE PLAN TYPE 5
NTS

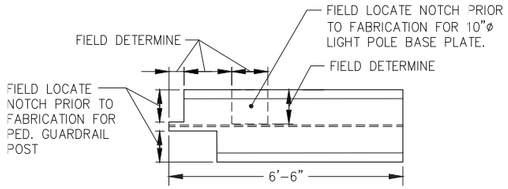

TRANSITION PLATE PLAN TYPE 6
NTS

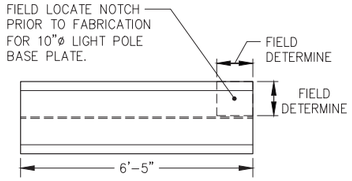

TRANSITION PLATE PLAN TYPE 7
NTS

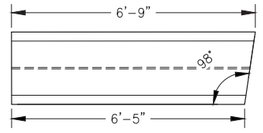

TRANSITION PLATE PLAN TYPE 8
NTS

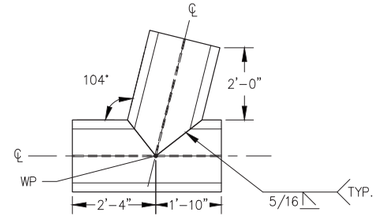

TRANSITION PLATE PLAN TYPE 9
NTS

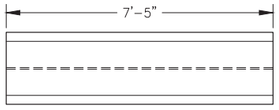

TRANSITION PLATE PLAN TYPE 10

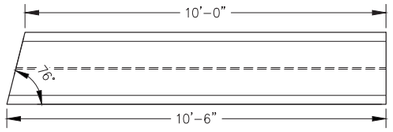

TRANSITION PLATE PLAN TYPE 11
NTS

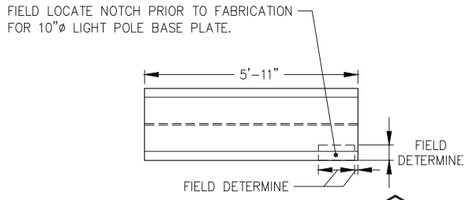

TRANSITION PLATE PLAN TYPE 12
NTS

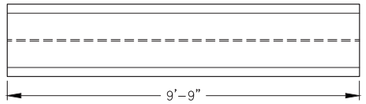

TRANSITION PLATE PLAN TYPE 13
NTS

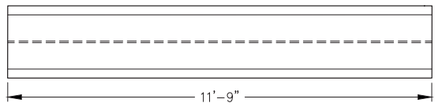

TRANSITION PLATE PLAN TYPE 14
NTS

REVISIONS

REV.	DATE	DESCRIPTION	DWN.	CKD.	APP.

P N D ENGINEERS, INC.
9360 Glacier Highway Ste 100
Juneau, Alaska 99801
Phone: 907-586-2093
Fax: 907-586-2099
www.pndengineers.com

DESIGN: MDS CHECKED: CRS
DRAWN: KLL APPROVED: CRS
SCALE: NTS
DATE: 5/23/2019

STATE OF ALASKA 49TH
Charles R. Somerville
CE-8845
REGISTERED PROFESSIONAL ENGINEER

DOWNTOWN WATERFRONT IMPROVEMENTS PHASE I
CBJ CONTRACT NO. DH19-014

SHEET TITLE:
TRANSITION PLATE LAYOUT

PND PROJECT NO.: 182045 C.A.N. NO.: AECC250

S1.16

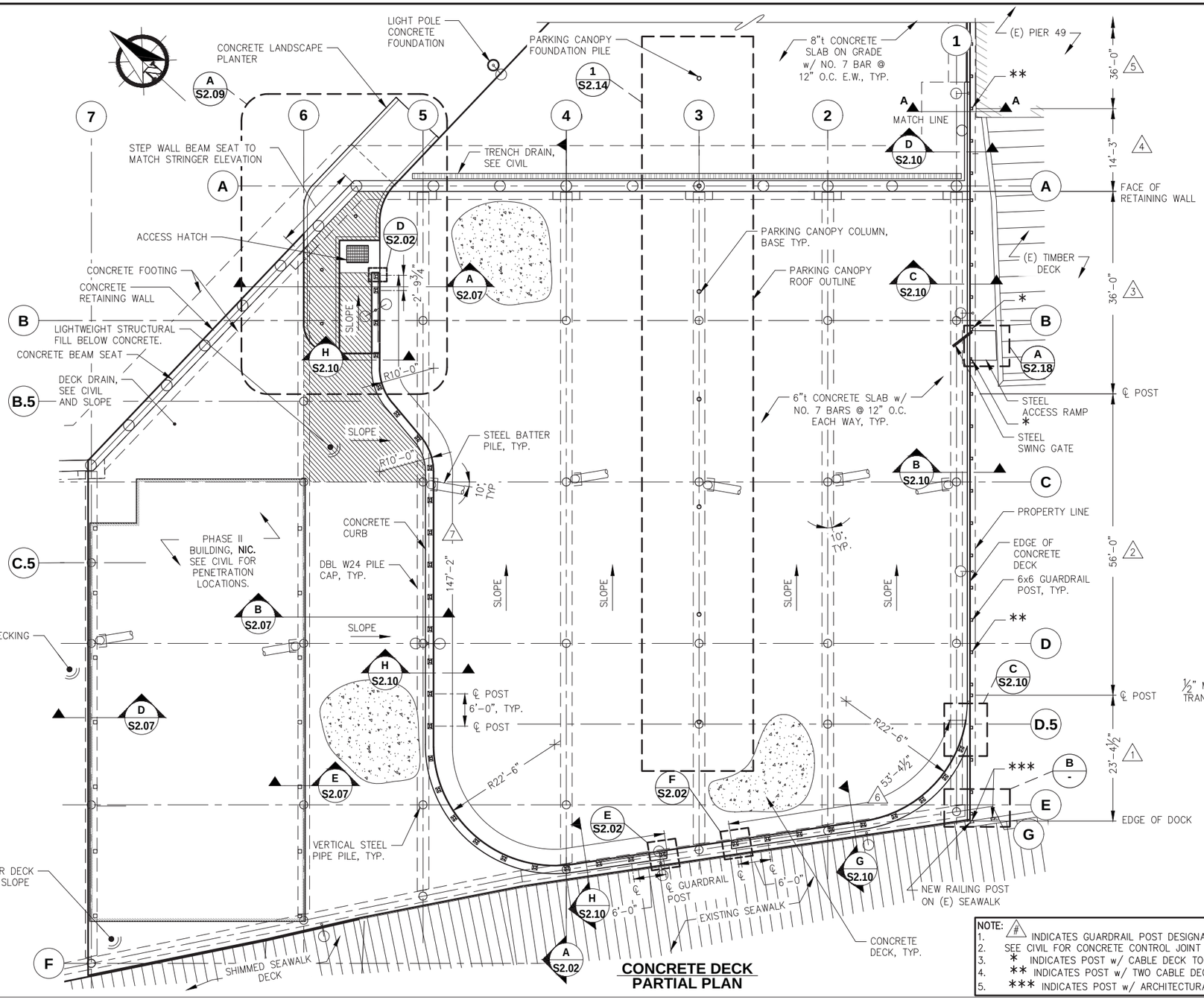

CONCRETE DECK PARTIAL PLAN

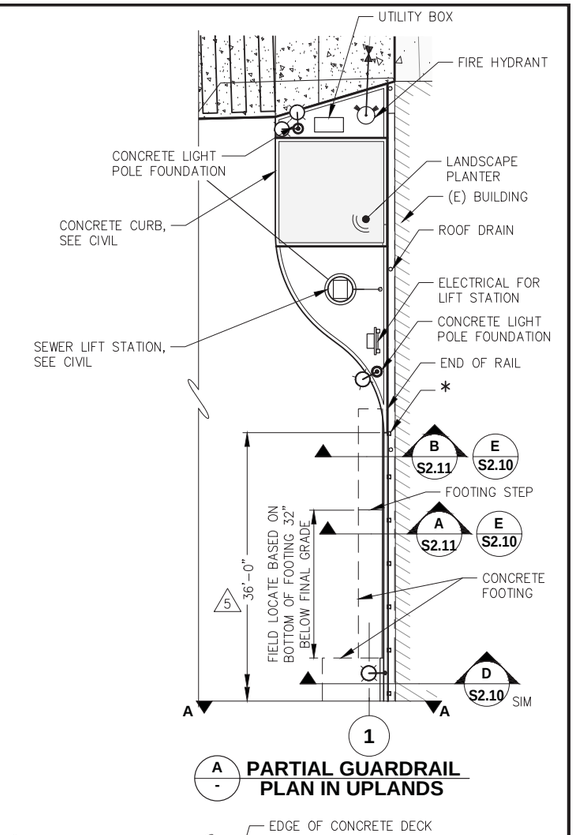

PARTIAL GUARDRAIL PLAN IN UPLANDS

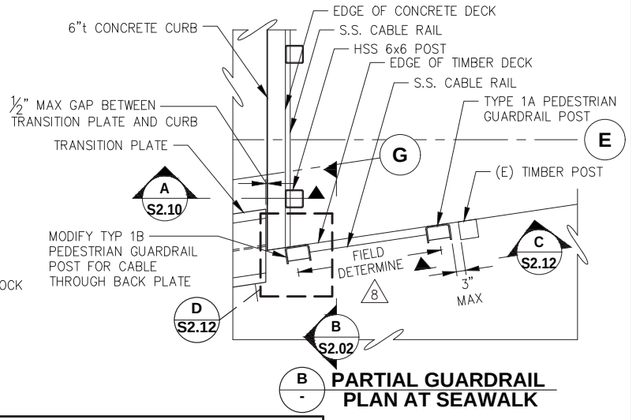

PARTIAL GUARDRAIL PLAN AT SEAWALK

NOTE:
1. # INDICATES GUARDRAIL POST DESIGNATIONS
2. SEE CIVIL FOR CONCRETE CONTROL JOINT PATTERN AND GRADES
3. * INDICATES POST w/ CABLE DECK TOGGLE TERMINATIONS.
4. ** INDICATES POST w/ TWO CABLE DECK TOGGLE TERMINATIONS OR TURNBUCKLES
5. *** INDICATES POST w/ ARCHITECTURAL TERMINATIONS/TURNBUCKLES.

REVISIONS

REV.	DATE	DESCRIPTION	DWN.	CKD.	APP.

PND ENGINEERS, INC.
9360 Glacier Highway Ste 100
Juneau, Alaska 99801
Phone: 907-586-2093
Fax: 907-586-2099
www.pndengineers.com

DESIGN: MDS CHECKED: CRS
DRAWN: KLL APPROVED: CRS
SCALE: SCALE IN FEET 0 10 20 FT.

STATE OF ALASKA 49TH Charles R. Somerville CE-8845 REGISTERED PROFESSIONAL ENGINEER
DATE: 5/23/2019

DOWNTOWN WATERFRONT IMPROVEMENTS PHASE I
CBJ CONTRACT NO. DH19-014

SHEET TITLE: **CONCRETE DECK PARTIAL PLAN**

PND PROJECT NO.: 182045 C.A.N. NO.: AECC250

S2.01

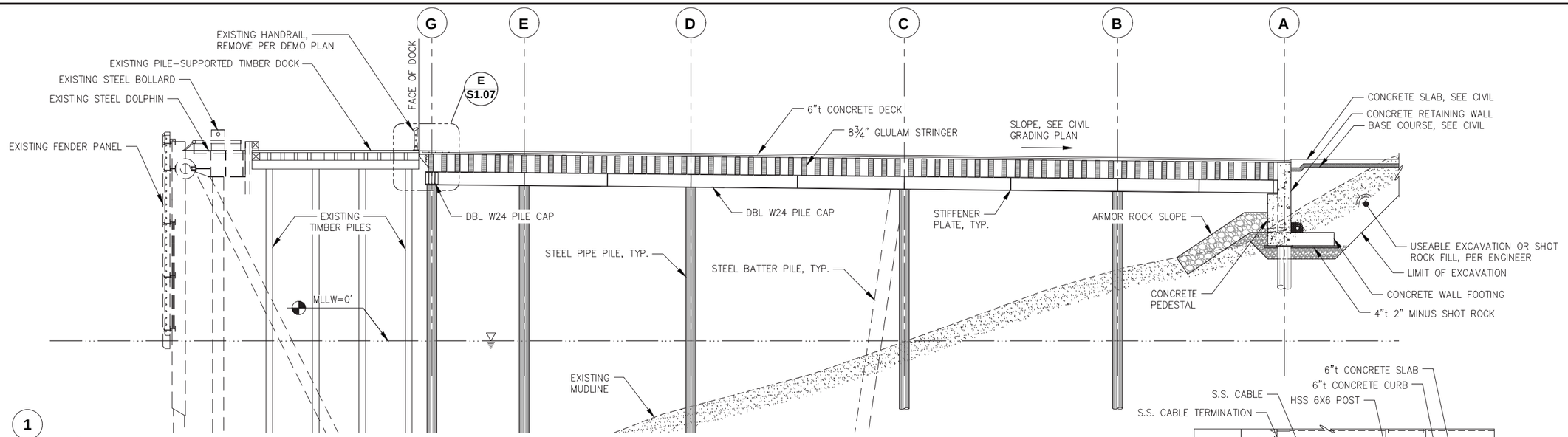

A S2.01 CONCRETE DECK ELEVATION

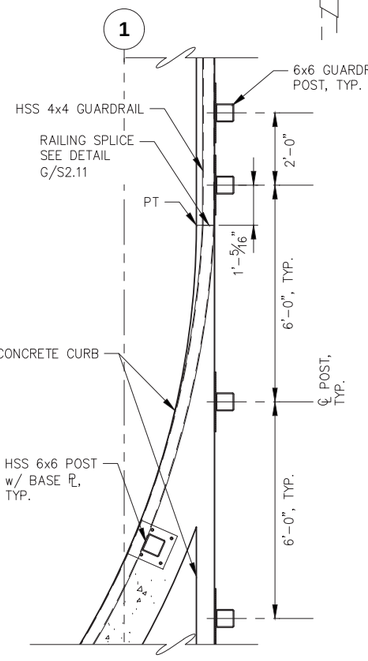

C S2.01 TYPICAL END OF CURB GUARDRAIL POST DETAIL

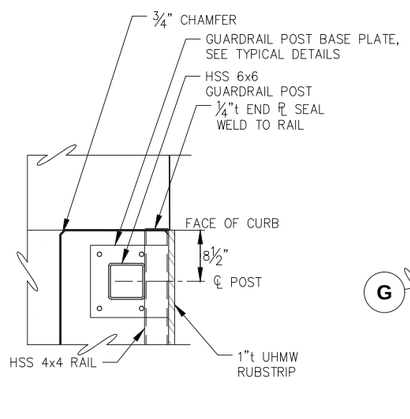

D S2.01 TYPICAL END OF CURB GUARDRAIL POST DETAIL

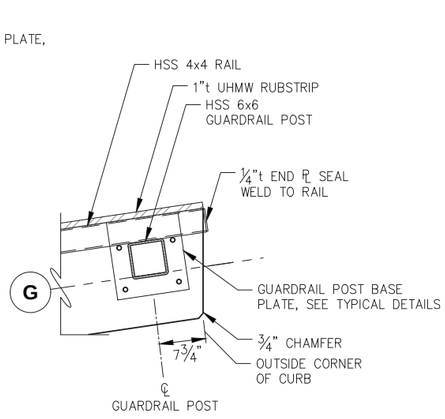

E S2.01 TYPICAL END OF CURB GUARDRAIL POST DETAIL

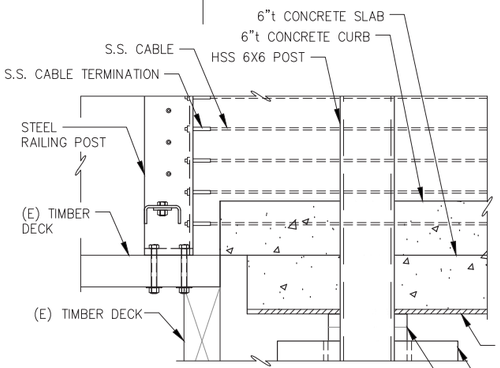

B S2.01 CURB AT EXISTING SEAWALK

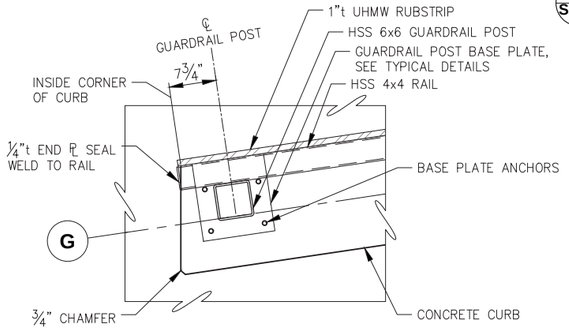

F S2.01 TYPICAL END OF CURB GUARDRAIL POST DETAIL

NOTE:
1. RUBSTRIP NOT SHOWN FOR CLARITY

REVISIONS

REV.	DATE	DESCRIPTION	DWN.	CKD.	APP.

P N D ENGINEERS, INC.
9360 Glacier Highway Ste 100
Juneau, Alaska 99801
Phone: 907-586-2093
Fax: 907-586-2099
www.pndengineers.com

DESIGN: MDS CHECKED: CRS
DRAWN: KLL APPROVED: CRS
SCALE: SCALE IN FEET 0 10 20 FT.
DATE: 5/23/2019

STATE OF ALASKA 49TH Charles R. Somerville CE-8845 REGISTERED PROFESSIONAL ENGINEER

DOWNTOWN WATERFRONT IMPROVEMENTS PHASE I
CBJ CONTRACT NO. DH19-014

SHEET TITLE: **CONCRETE DECK ELEVATION AND SECTION**

S2.02

PND PROJECT NO.: 182045 C.A.N. NO.: AECC250

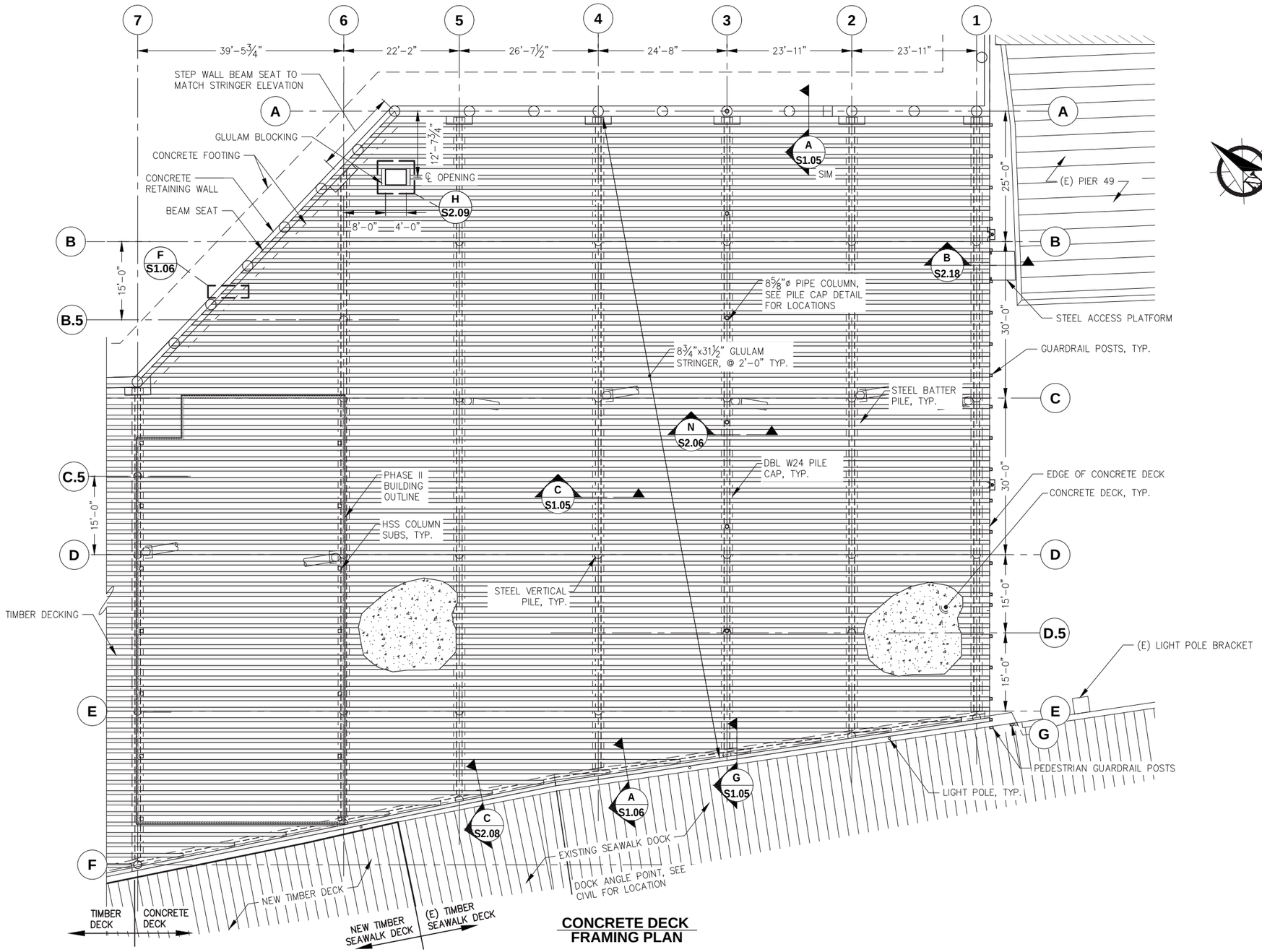

CONCRETE DECK FRAMING PLAN

CITY & BOROUGH OF JUNEAU — DOCKS & HARBORS

REVISIONS

REV.	DATE	DESCRIPTION	DWN.	CKD.	APP.

PND ENGINEERS, INC.
9360 Glacier Highway Ste 100
Juneau, Alaska 99801
Phone: 907-586-2093
Fax: 907-586-2099
www.pndengineers.com

DESIGN: MDS CHECKED: CRS
DRAWN: KLL APPROVED: CRS
SCALE: SCALE IN FEET 0 10 20 FT.

STATE OF ALASKA 49TH — Charles R. Somerville CE-8845 — REGISTERED PROFESSIONAL ENGINEER
DATE: 5/23/2019

DOWNTOWN WATERFRONT IMPROVEMENTS PHASE I
CBJ CONTRACT NO. DH19-014

SHEET TITLE: **CONCRETE DECK FRAMING PLAN**

S2.03

PND PROJECT NO.: 182045 C.A.N. NO.: AECC250

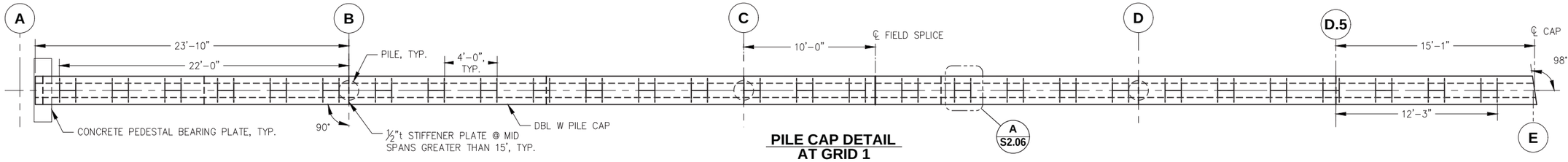

PILE CAP DETAIL AT GRID 1

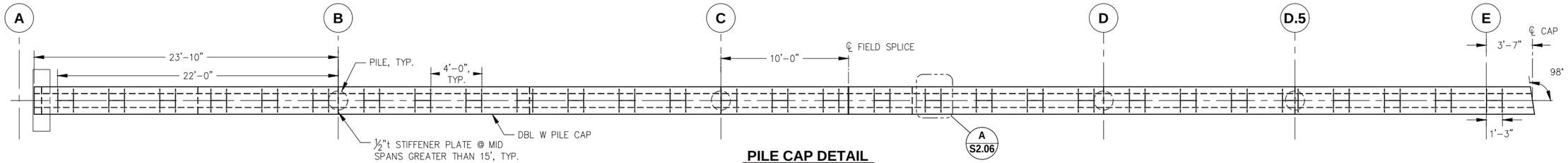

PILE CAP DETAIL AT GRID 2

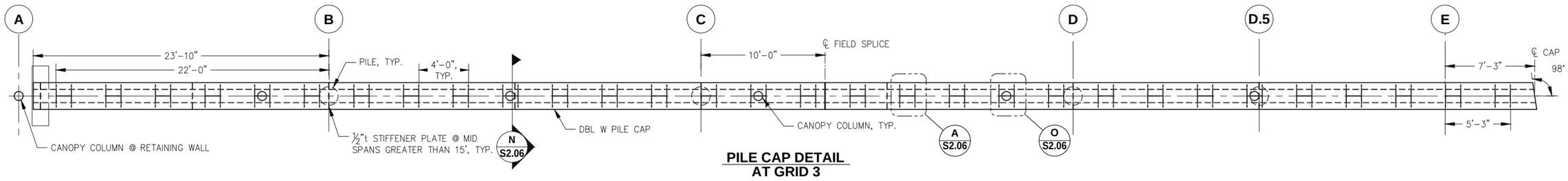

PILE CAP DETAIL AT GRID 3

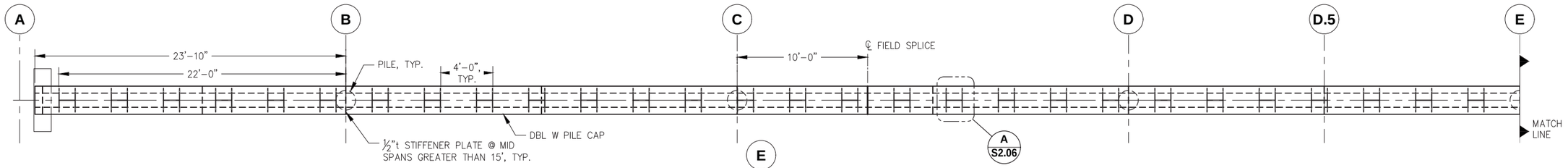

PILE CAP DETAIL AT GRID 4

NOTE:
1. SHOP SPLICE AS REQUIRED FOR SECTIONS TO FIT IN GALVANIZING TANKS.
2. ALL PLATE DIMENSIONS ARE TO THE OUTSIDE OF SIDE PLATE, UNLESS NOTED OTHERWISE
3. ALL PILE CAPS ARE DBL W24x131, UNLESS OTHERWISE NOTED
4. ONE STIFFENER PLATE SHALL BE LOCATED AT ℄ EACH PILE, AND ONE PLATE AT MIDSPAN BETWEEN PILES AT PILE SPACING GREATER THAN 15' O.C.

CITY & BOROUGH OF JUNEAU — DOCKS & HARBORS

REVISIONS

REV.	DATE	DESCRIPTION	DWN.	CKD.	APP.

PND ENGINEERS, INC.
9360 Glacier Highway Ste 100
Juneau, Alaska 99801
Phone: 907-586-2093
Fax: 907-586-2099
www.pndengineers.com

DESIGN: MDS CHECKED: CRS
DRAWN: KLL APPROVED: CRS
SCALE: SCALE IN FEET 0 10 20 FT.

STATE OF ALASKA 49TH — Charles R. Somerville CE-8845 — REGISTERED PROFESSIONAL ENGINEER
DATE: 5/23/2019

DOWNTOWN WATERFRONT IMPROVEMENTS PHASE I
CBJ CONTRACT NO. DH19-014

SHEET TITLE: **PILE CAP PLAN**

PND PROJECT NO.: 182045 | C.A.N. NO.: AECC250

S2.04

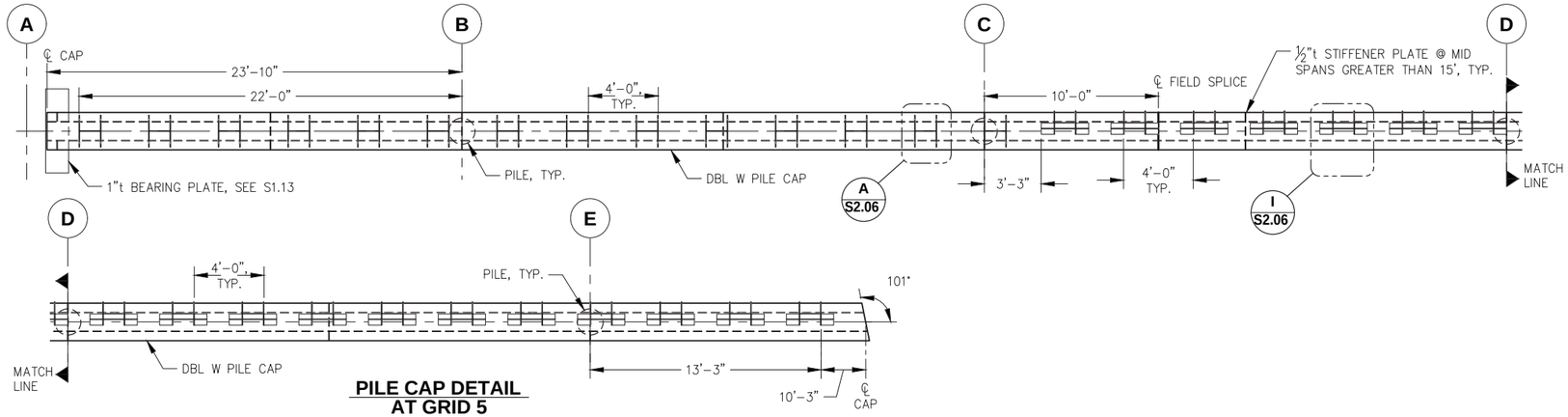

PILE CAP DETAIL AT GRID 5

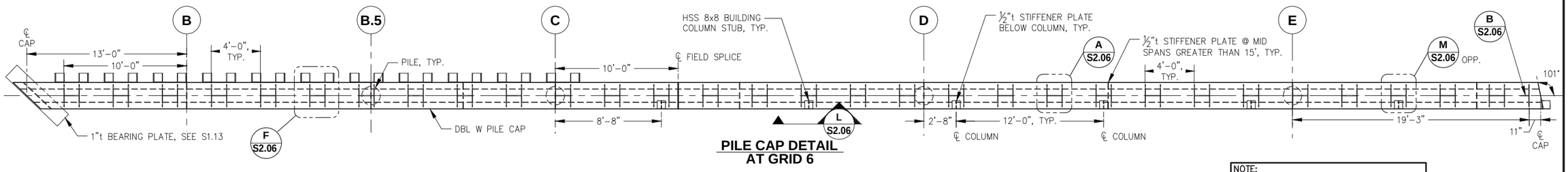

PILE CAP DETAIL AT GRID 6

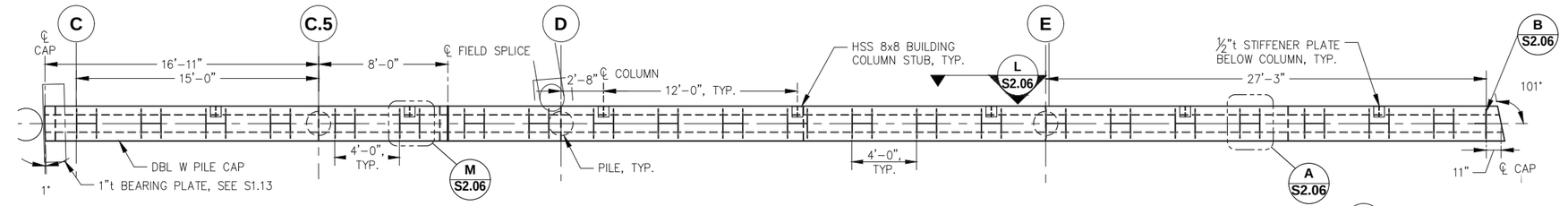

PILE CAP DETAIL AT GRID 7

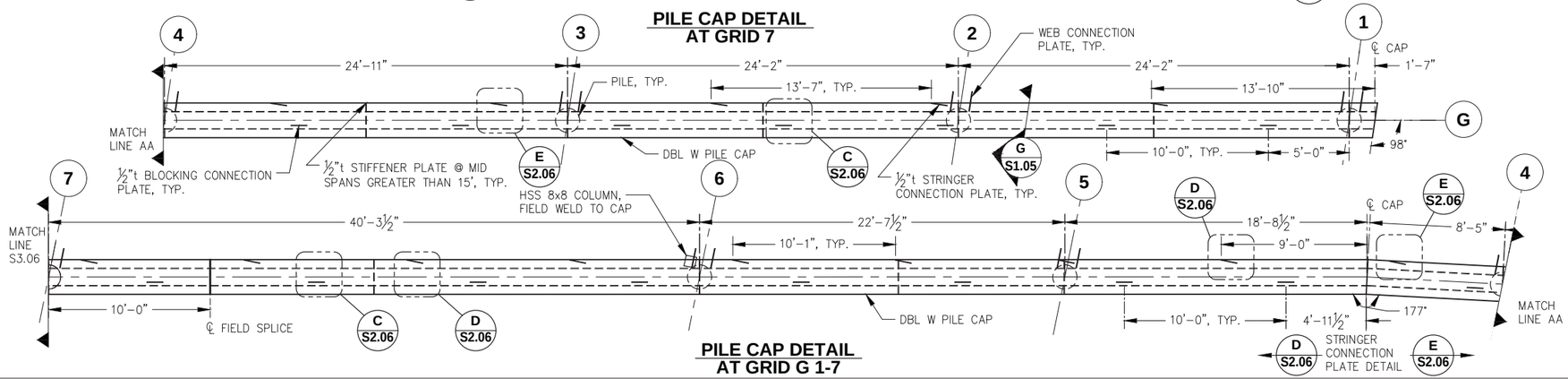

PILE CAP DETAIL AT GRID G 1-7

NOTE:
1. GRID 6 AND 7 PILE CAPS SHALL BE ALIGNED SO THE ℄ OF EACH COLUMN POSTS SHALL BE ALIGNED HORIZONTALLY WITHIN ± 1/16"

NOTE:
1. SHOP SPLICE AS REQUIRED FOR SECTIONS TO FIT IN GALVANIZING TANKS.
2. ALL PLATE DIMENSIONS ARE TO THE OUTSIDE OF SIDE PLATE, UNLESS NOTED OTHERWISE
3. ALL PILE CAPS ARE DBL W24x131, UNLESS OTHERWISE NOTED
4. ONE STIFFENER PLATE SHALL BE LOCATED AT ℄ EACH PILE, AND ONE PLATE AT MIDSPAN BETWEEN PILES AT PILE SPACING GREATER THAN 15' O.C.

CITY & BOROUGH OF JUNEAU DOCKS & HARBORS

REVISIONS

REV.	DATE	DESCRIPTION	DWN.	CKD.	APP.

PND ENGINEERS, INC.
9360 Glacier Highway Ste 100
Juneau, Alaska 99801
Phone: 907-586-2093
Fax: 907-586-2099
www.pndengineers.com

DESIGN: MDS CHECKED: CRS
DRAWN: KLL APPROVED: CRS
SCALE: SCALE IN FEET 0 4 8 FT.

STATE OF ALASKA 49TH Charles R. Somerville CE-8845 REGISTERED PROFESSIONAL ENGINEER
DATE: 5/23/2019

DOWNTOWN WATERFRONT IMPROVEMENTS PHASE I
CBJ CONTRACT NO. DH19-014

SHEET TITLE: **PILE CAP PLAN**

S2.05

PND PROJECT NO.: 182045 C.A.N. NO.: AECC250

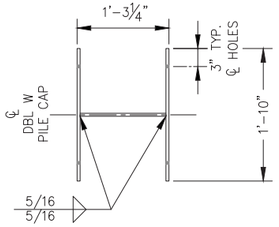

A - STRINGER CONNECTION WELDMENT

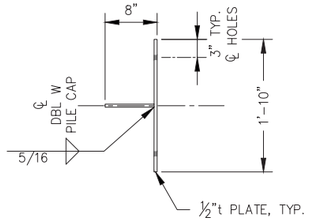

B - STRINGER CONNECTION WELDMENT

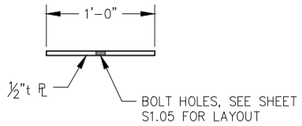

C - STRINGER CONNECTION WELDMENT

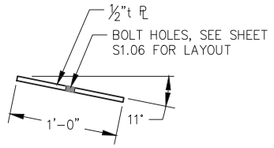

D - TYPICAL ANGLED STRINGER CONNECTION PLATE

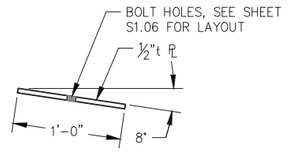

E - TYPICAL ANGLED STRINGER CONNECTION PLATE

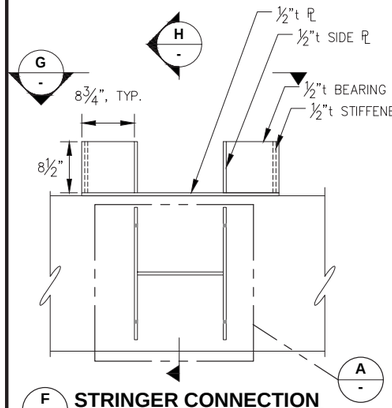

F - STRINGER CONNECTION WELDMENT

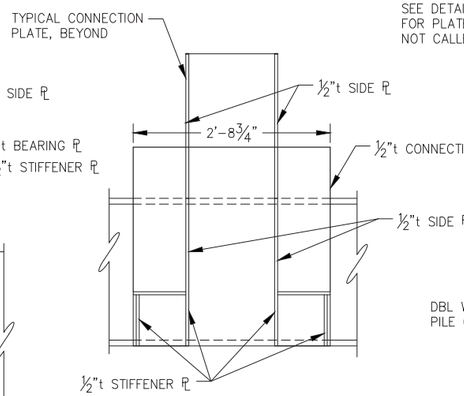

G - TYPE F ELEVATION

NOTE: BOLT HOLES NOT SHOWN FOR CLARITY

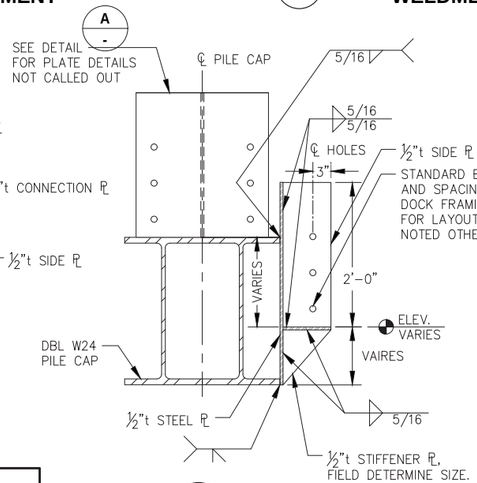

H - TYPE F SECTION

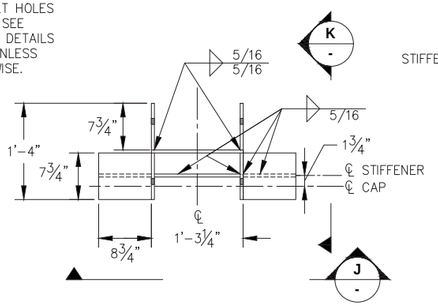

I - STRINGER CONNECTION WELDMENT

NOTE: ALL ℄ ARE ½"t STEEL

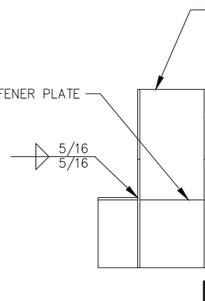

J - STRINGER CONNECTION ELEVATION

NOTE: BOLT HOLES NOT SHOWN FOR CLARITY

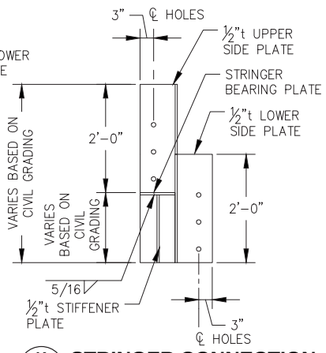

K - STRINGER CONNECTION SECTION

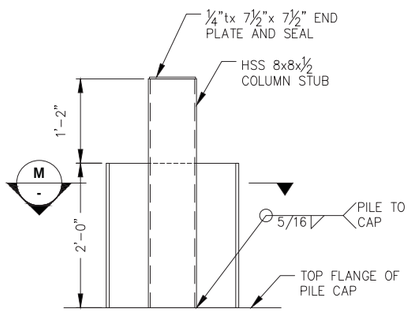

L - TYPICAL BUILDING COLUMN STUB DETAIL

NOTE: BOLT HOLES NOT SHOWN FOR CLARITY

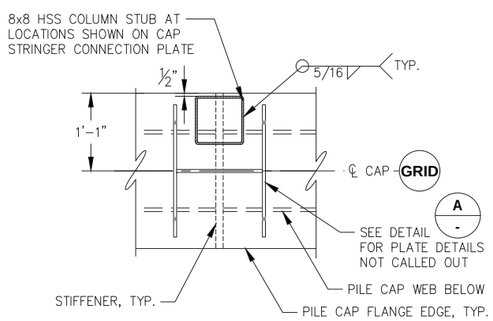

M - TYPICAL BUILDING COLUMN STUB CONNECTION DETAIL

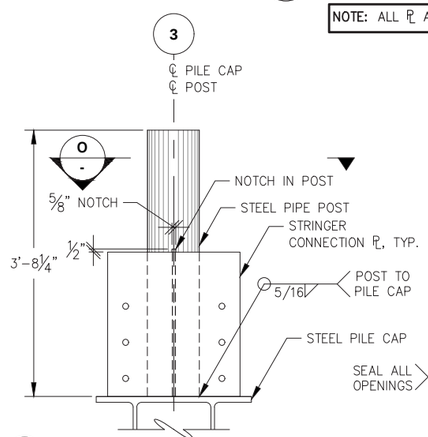

N - TYPICAL PARKING CANOPY CONNECTION DETAIL

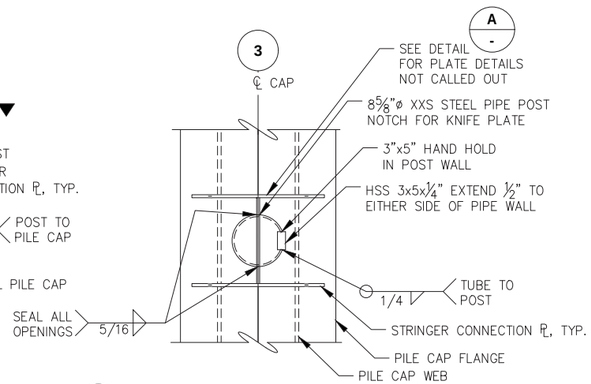

O - TYPICAL PRE-ENGINEERED CANOPY CONNECTION DETAIL

REVISIONS

REV.	DATE	DESCRIPTION	DWN.	CKD.	APP.

P N D ENGINEERS, INC.
9360 Glacier Highway Ste 100
Juneau, Alaska 99801
Phone: 907-586-2093
Fax: 907-586-2099
www.pndengineers.com

DESIGN: MDS CHECKED: CRS
DRAWN: KLL APPROVED: CRS
SCALE: SCALE IN FEET 0 10 20 FT.
DATE: 5/23/2019

STATE OF ALASKA 49TH Charles R. Somerville CE-8845 REGISTERED PROFESSIONAL ENGINEER

DOWNTOWN WATERFRONT IMPROVEMENTS PHASE I
CBJ CONTRACT NO. DH19-014

SHEET TITLE: **PILE CAP PLAN**

S2.06

PND PROJECT NO.: 182045 C.A.N. NO.: AECC250

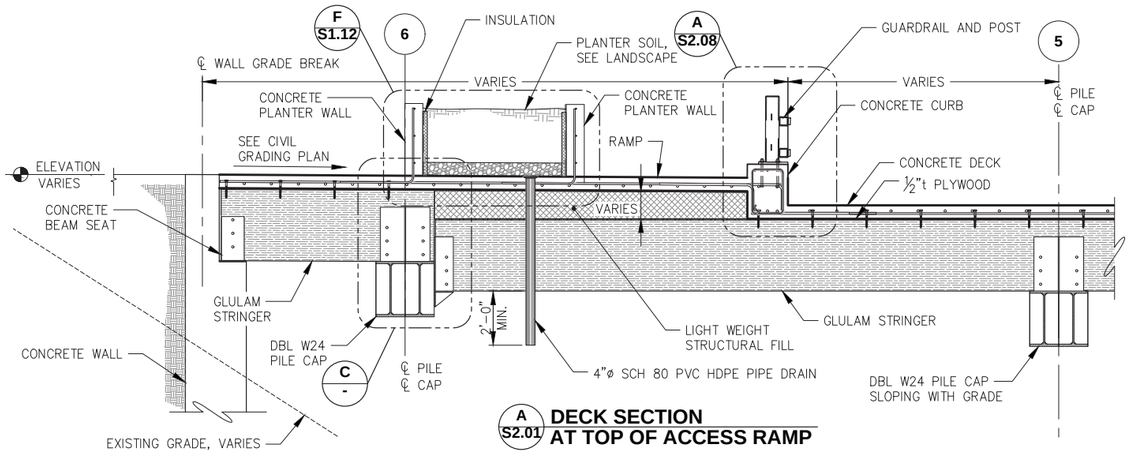

A S2.01 **DECK SECTION AT TOP OF ACCESS RAMP**

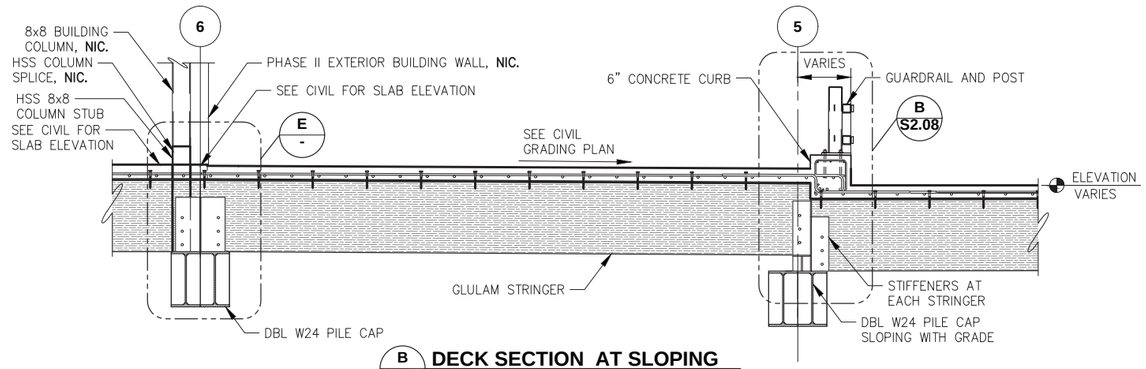

B S2.01 **DECK SECTION AT SLOPING PILE CAP TRANISION**

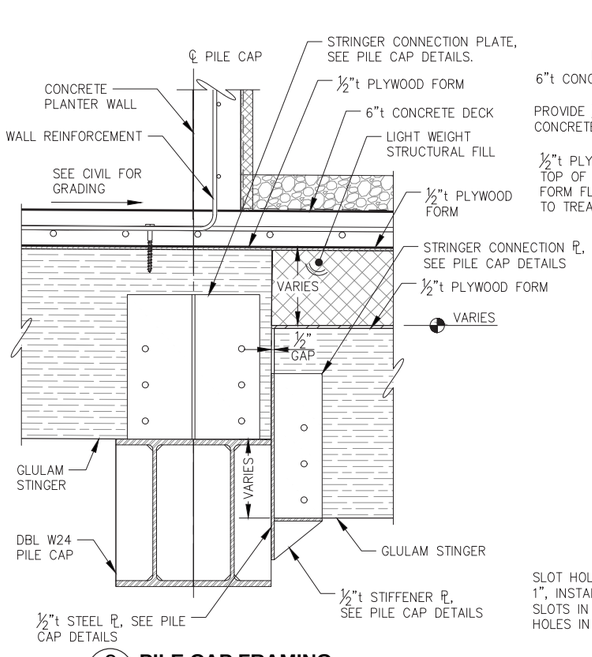

C - **PILE CAP FRAMING DETAIL**

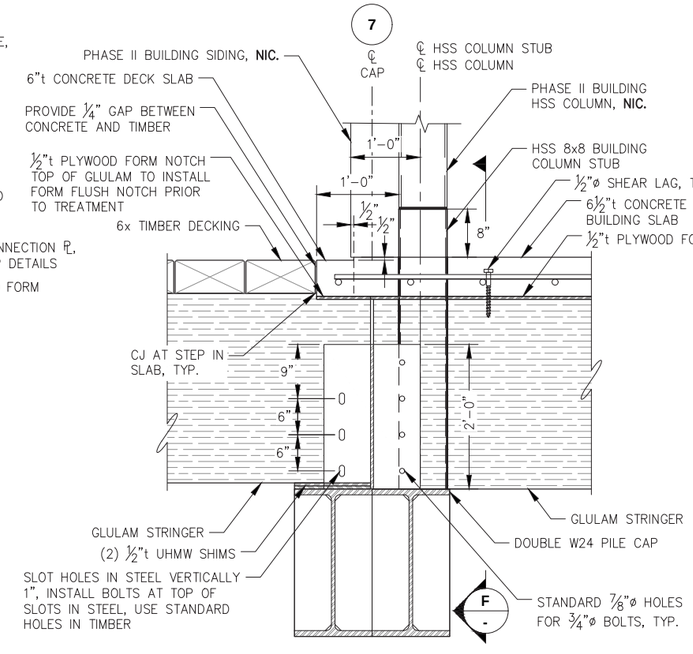

D S2.01 **TIMBER TO CONCRETE JOINT DETAIL AT PHASE II BUILDING EXTERIOR**

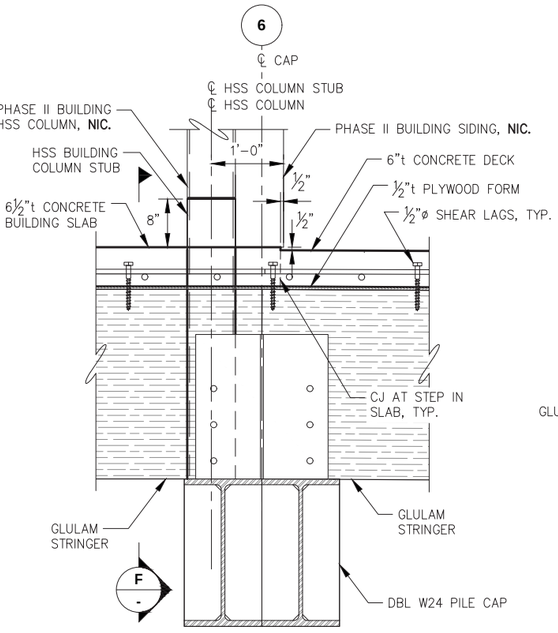

E - **DECK SECTION AT PHASE II BUILDING EXTERIOR**

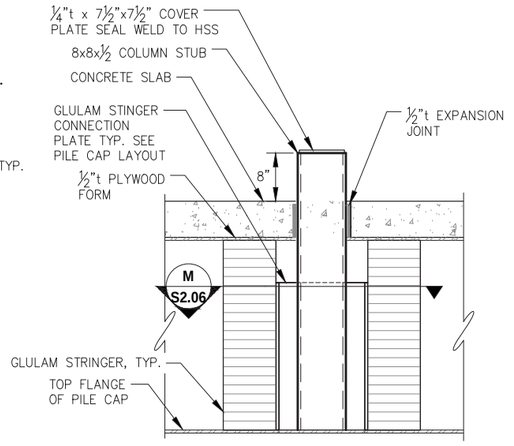

F - **TYPICAL BUILDING COLUMN DETAIL**

REVISIONS

REV.	DATE	DESCRIPTION	DWN.	CKD.	APP.

PND ENGINEERS, INC.
9360 Glacier Highway Ste 100
Juneau, Alaska 99801
Phone: 907-586-2093
Fax: 907-586-2099
www.pndengineers.com

DESIGN: MDS CHECKED: CRS
DRAWN: KLL APPROVED: CRS
SCALE: NTS
DATE: 5/23/2019

STATE OF ALASKA 49TH — Charles R. Somerville CE-8845 — REGISTERED PROFESSIONAL ENGINEER

DOWNTOWN WATERFRONT IMPROVEMENTS PHASE I
CBJ CONTRACT NO. DH19-014

SHEET TITLE: **CONCRETE DECK SECTIONS**

S2.07

PND PROJECT NO.: 182045 C.A.N. NO.: AECC250

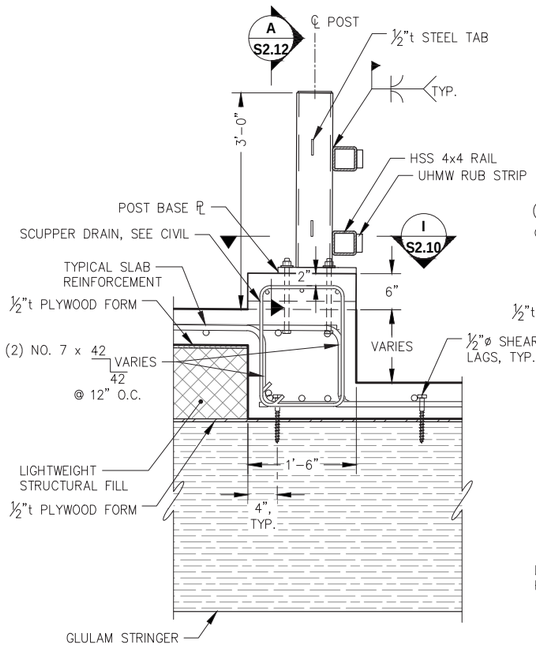

A S2.07 **DECK SECTION AT FACE MOUNTED VEHICLE RAIL**

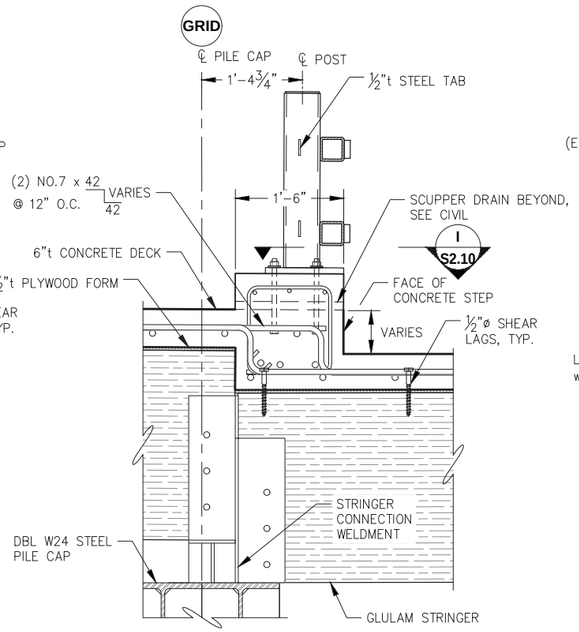

B S2.07 **DECK SECTION AT PILE CAP**

NOTE: SEE DETAIL A/- FOR DETAILS NOT CALLED OUT

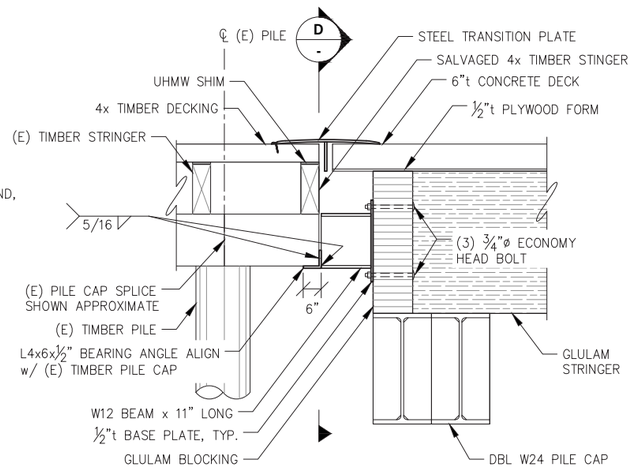

C S2.03 **EXISTING CAP SUPPORT BRACKET DETAIL**

NOTE:
1. REQUIRED AT (3) (E) PILE CAPS THAT ARE CUT OFF WHEN DEMOLISHING APPROACH DOCK.
2. BLOCKING AND STRINGER CONNECTION PLATES AND BOLTS NOT SHOWN FOR CLARITY.

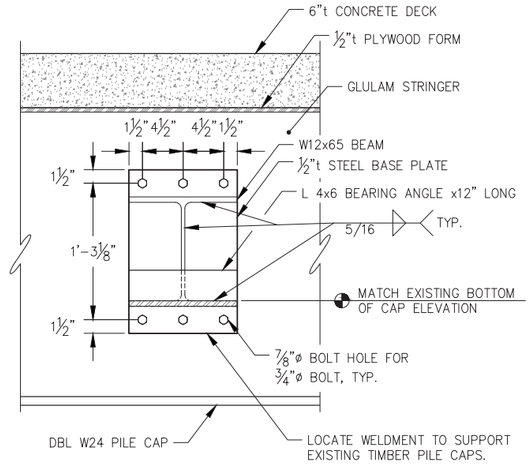

D - **EXISTING CAP SUPPORT BRACKET DETAIL**

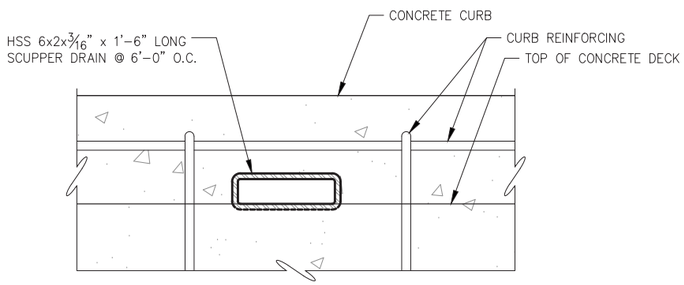

E - **TYPICAL SCUPPER DRAIN DETAIL CENTER BETWEEN GUARDRAIL POSTS, TYP.**

CITY & BOROUGH OF JUNEAU DOCKS & HARBORS

REVISIONS

REV.	DATE	DESCRIPTION	DWN.	CKD.	APP.

P N D ENGINEERS, INC.
9360 Glacier Highway Ste 100
Juneau, Alaska 99801
Phone: 907-586-2093
Fax: 907-586-2099
www.pndengineers.com

DESIGN: MDS CHECKED: CRS
DRAWN: KLL APPROVED: CRS
SCALE: NTS
DATE: 5/23/2019

STATE OF ALASKA 49TH — Charles R. Somerville CE-8845 — REGISTERED PROFESSIONAL ENGINEER

DOWNTOWN WATERFRONT IMPROVEMENTS PHASE I
CBJ CONTRACT NO. DH19-014

SHEET TITLE: **CONCRETE DECK DETAILS**

PND PROJECT NO.: 182045 C.A.N. NO.: AECC250

S2.08

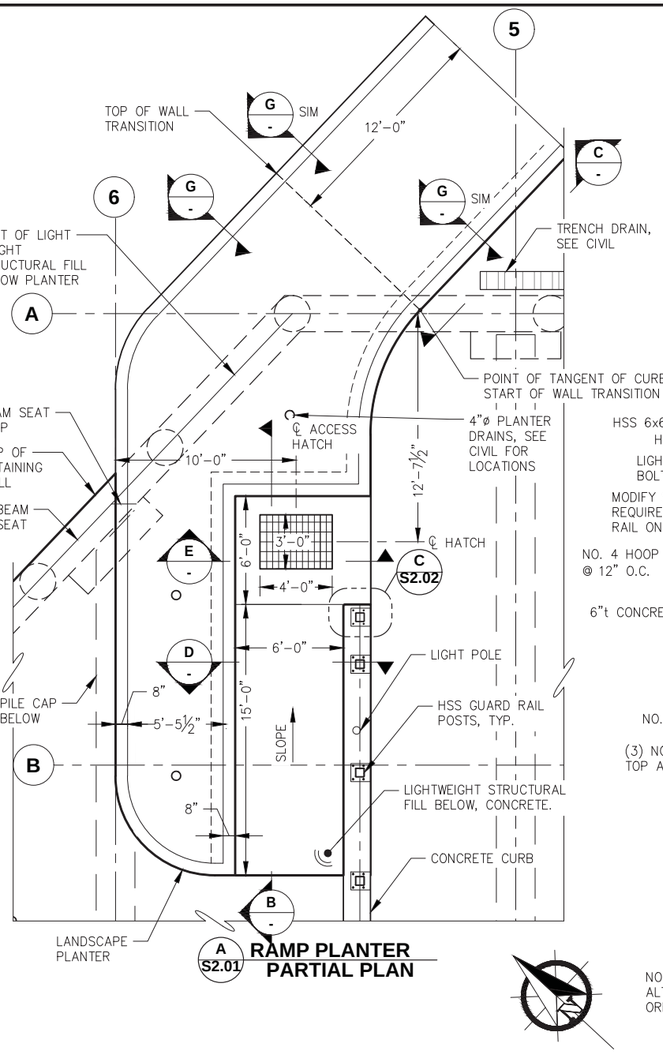

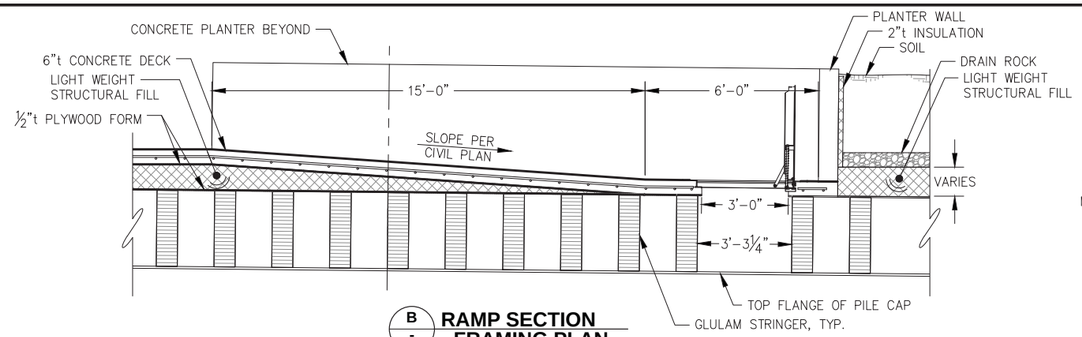

B **RAMP SECTION FRAMING PLAN**

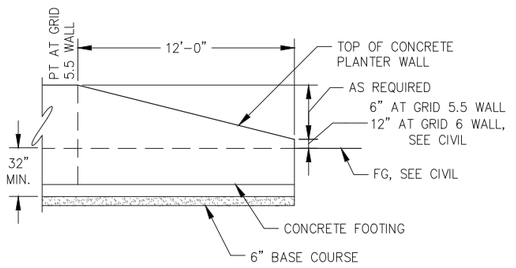

C **PLANTER WALL TRANSITION**

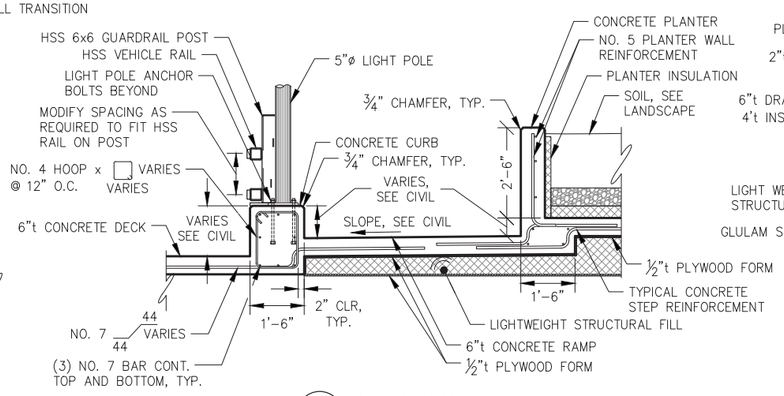

D **RAMP SECTION**

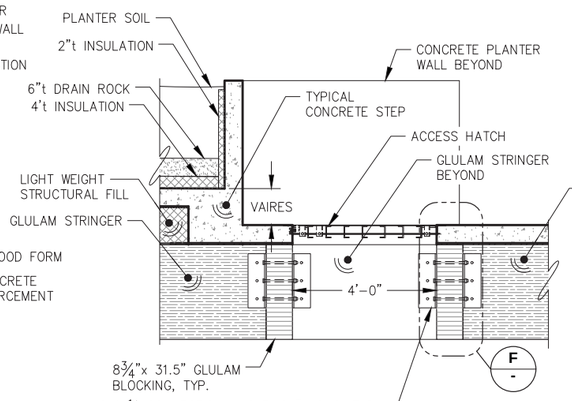

E **ACCESS HATCH SECTION**

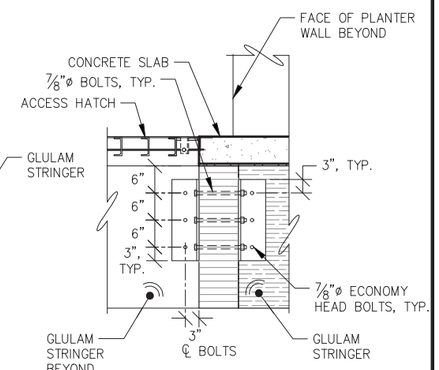

F **ACCESS HATCH SECTION**

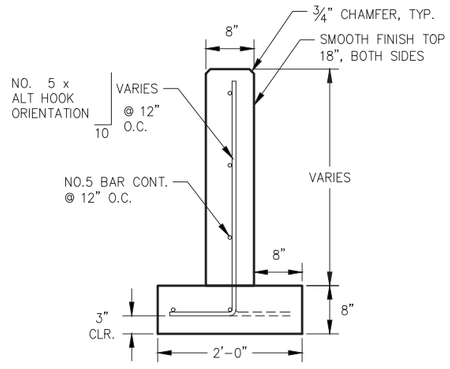

G **PLANTER WALL SECTION**

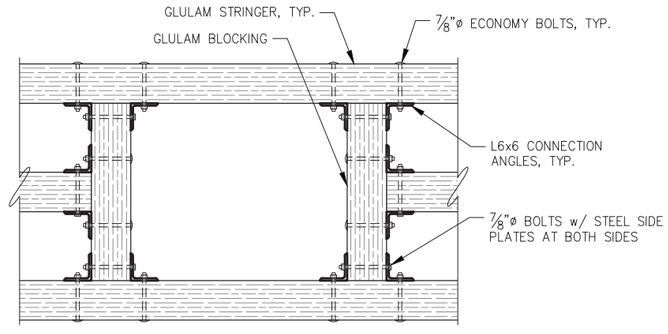

H **HATCH FRAMING PARTIAL PLAN**

REVISIONS

REV.	DATE	DESCRIPTION	DWN.	CKD.	APP.

PND ENGINEERS, INC.
9360 Glacier Highway Ste 100
Juneau, Alaska 99801
Phone: 907-586-2093
Fax: 907-586-2099
www.pndengineers.com

DESIGN: MDS CHECKED: CRS
DRAWN: KLL APPROVED: CRS
SCALE: NTS
DATE: 5/23/2019

STATE OF ALASKA 49TH — Charles R. Somerville CE-8945 — REGISTERED PROFESSIONAL ENGINEER

DOWNTOWN WATERFRONT IMPROVEMENTS PHASE I
CBJ CONTRACT NO. DH19-014

SHEET TITLE: **CONCRETE DECK DETAILS**

PND PROJECT NO.: 182045 C.A.N. NO.: AECC250

S2.09

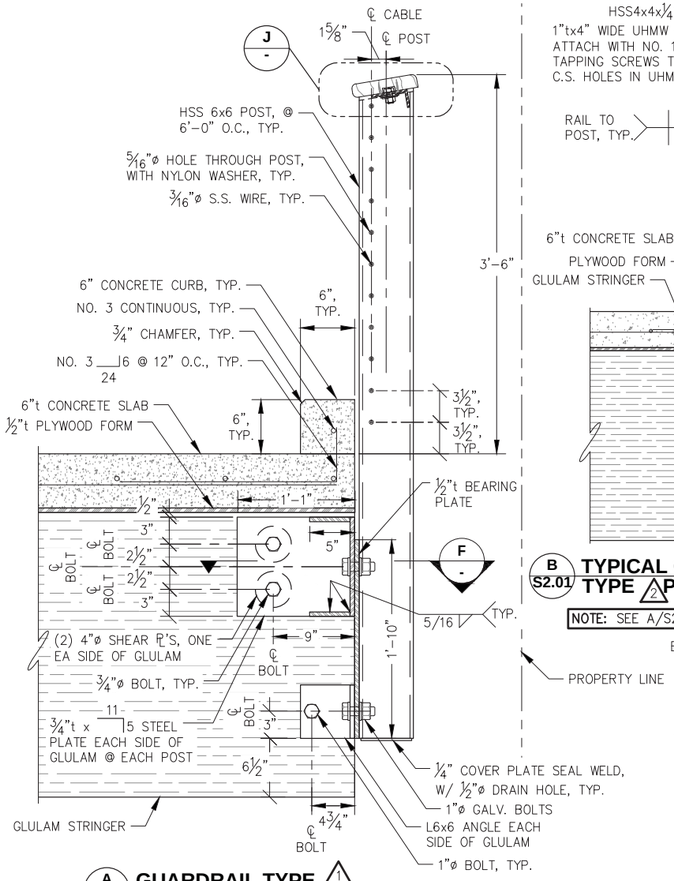

A - GUARDRAIL TYPE 1 POST SECTION

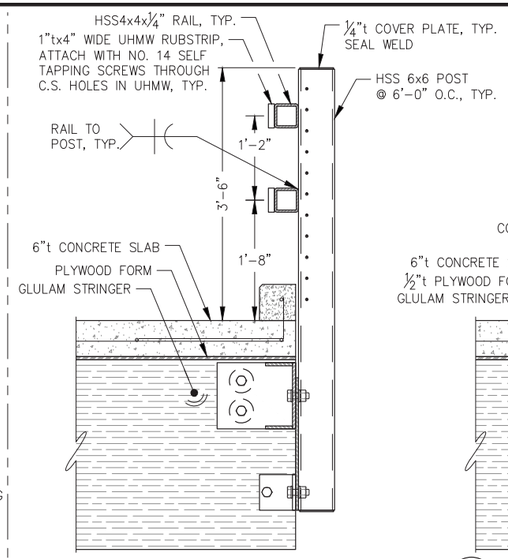

B S2.01 TYPICAL GUARDRAIL TYPE 2 POST CONNECTION DETAIL

NOTE: SEE A/S2.10 FOR CONNECTION DETAIL

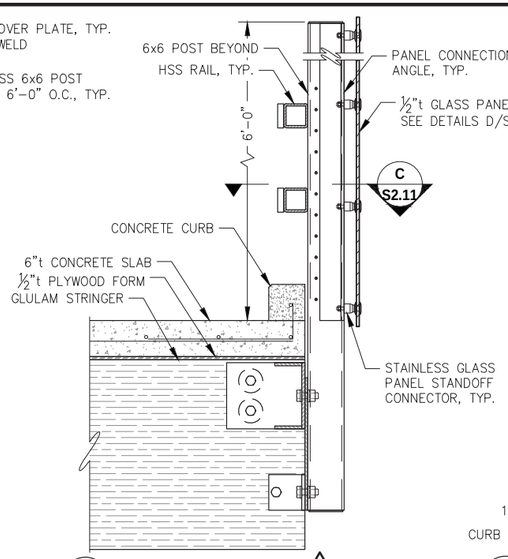

C S2.01 GUARDRAIL TYPE 3 NOISE BARRIER POST SECTION

NOTE: SEE A/S2.10 FOR CONNECTION DETAIL

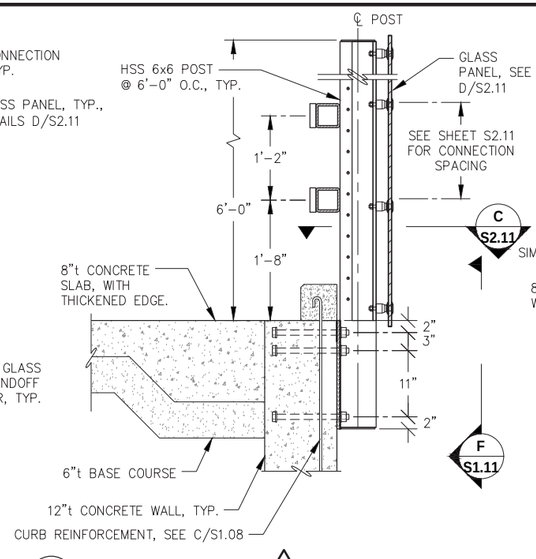

D S2.01 GUARDRAIL TYPE 4 POST CONNECTION AT CONCRETE WALL W/ NOISE BARRIER

NOTE: SEE A/S2.10 FOR NOTES NOT CALLED OUT

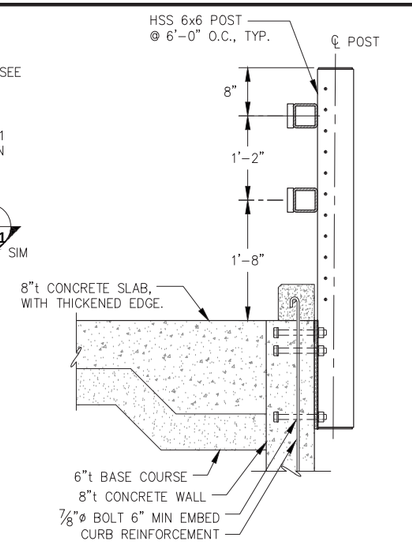

E S2.01 GUARDRAIL TYPE 5 POST CONNECTION AT CONCRETE WALL

NOTE: SEE A/S2.10 FOR NOTES NOT CALLED OUT

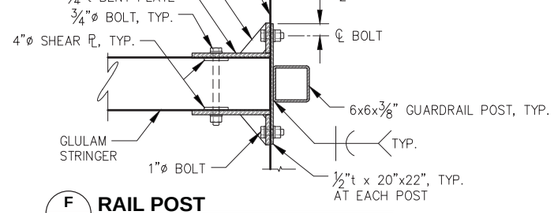

F - RAIL POST CONNECTION SECTION

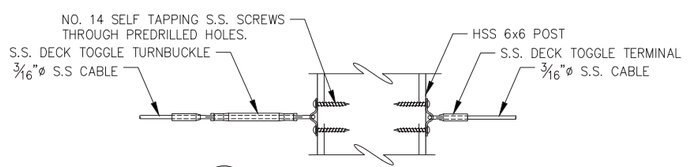

K - TYPICAL CABLE TERMINATION DETAILS

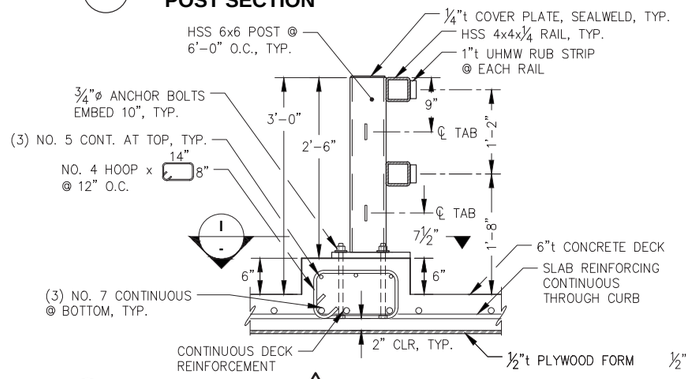

G S2.01 GUARDRAIL TYPE 6 POST CONNECTION AT SURFACE MOUNT LOCATION

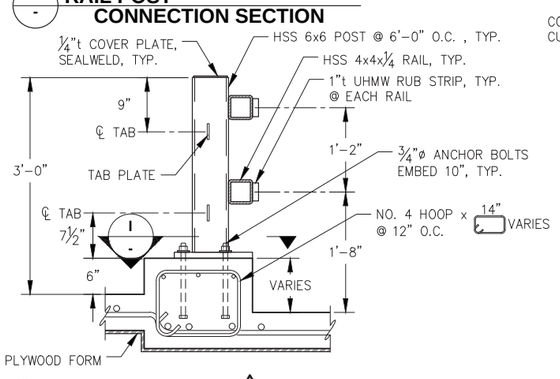

H - GUARDRAIL TYPE 7 POST CONNECTION AT SURFACE MOUNT LOCATION

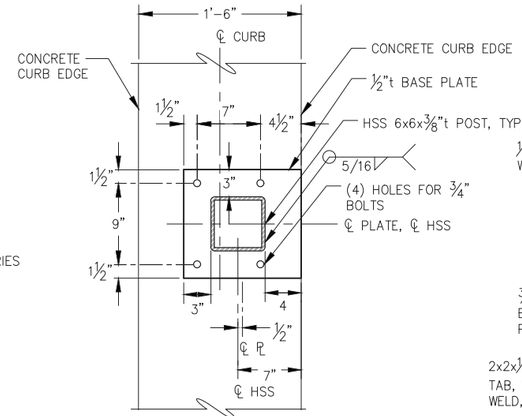

I - FACE MOUNT GUARDRAIL POST CONNECTION DETAIL

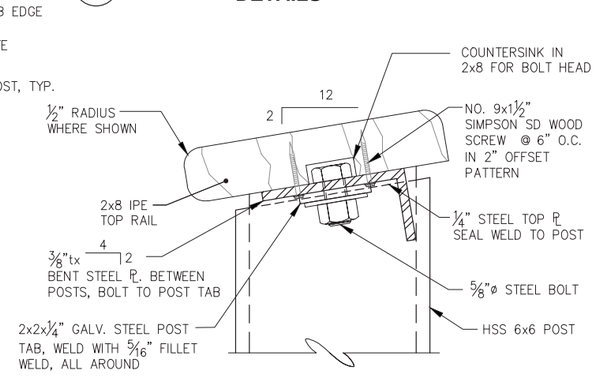

J - TYPICAL GUARDRAIL TOP RAIL DETAIL

REVISIONS

REV.	DATE	DESCRIPTION	DWN.	CKD.	APP.

P N D ENGINEERS, INC.
9360 Glacier Highway Ste 100
Juneau, Alaska 99801
Phone: 907-586-2093
Fax: 907-586-2099
www.pndengineers.com

DESIGN: MDS CHECKED: CRS
DRAWN: KLL APPROVED: CRS
SCALE: NTS
DATE: 5/23/2019

STATE OF ALASKA 49TH Charles R. Somerville CE-8845 REGISTERED PROFESSIONAL ENGINEER

DOWNTOWN WATERFRONT IMPROVEMENTS PHASE I
CBJ CONTRACT NO. DH19-014

SHEET TITLE: **CONCRETE DECK RAILING SECTIONS AND ELEVATIONS**

S2.10

PND PROJECT NO.: 182045 C.A.N. NO.: AECC250

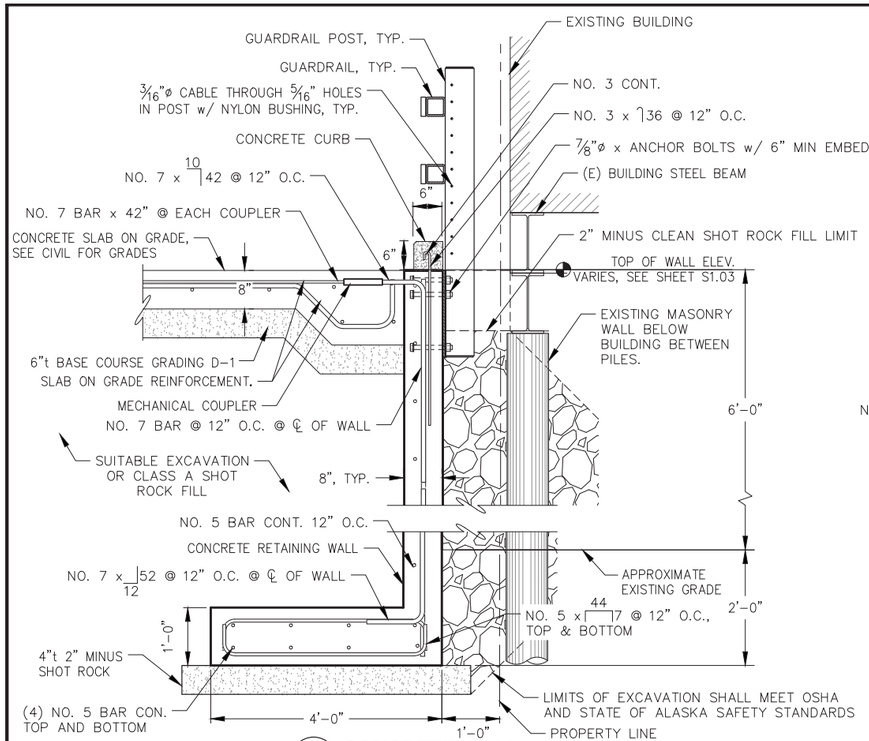

A S2.01 **CONCRETE WALL SECTION**

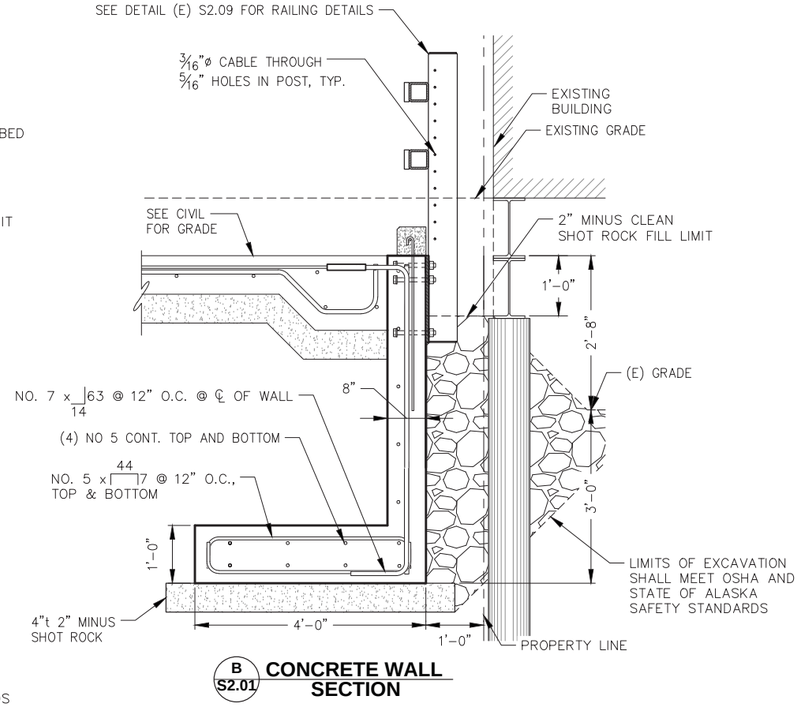

B S2.01 **CONCRETE WALL SECTION**

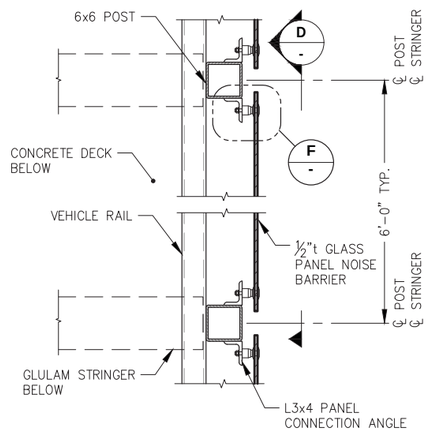

C - **VEHICLE RAIL NOISE BARRIER PANEL SECTION**

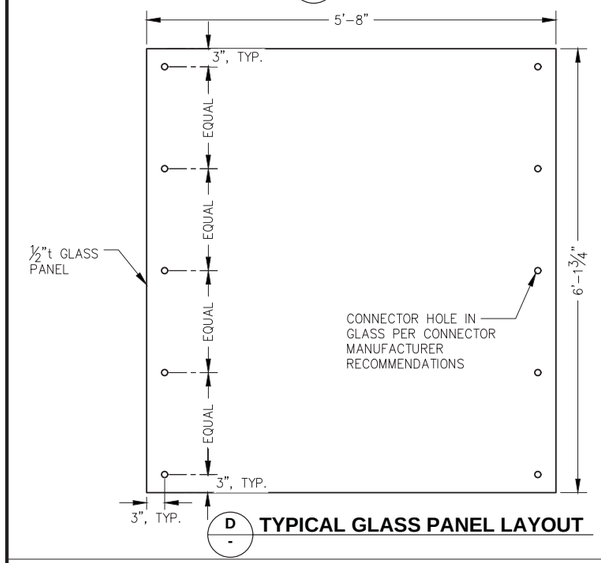

D - **TYPICAL GLASS PANEL LAYOUT**

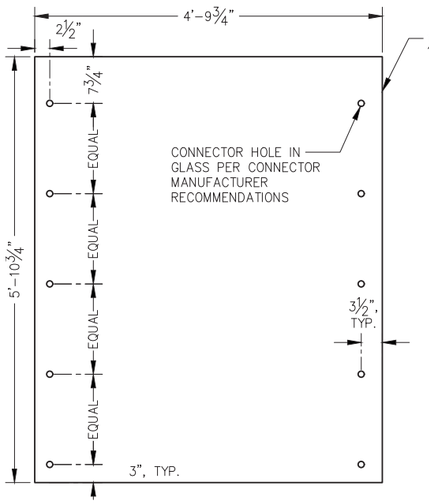

E - **GLASS PANEL AT GATE LAYOUT**

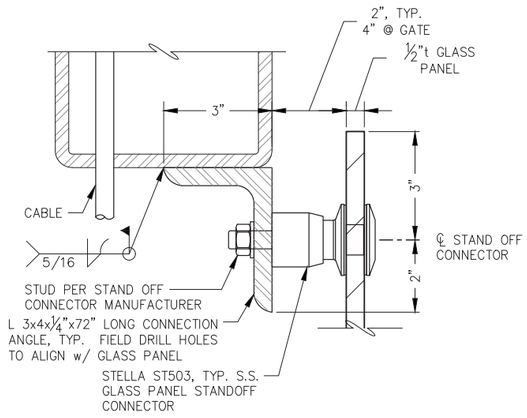

F - **TYPICAL GLASS STAND OFF CONNECTOR**

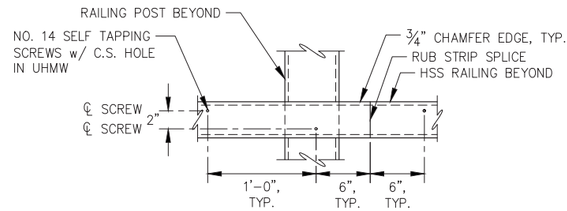

K - **RUB STRIP PROFILE**

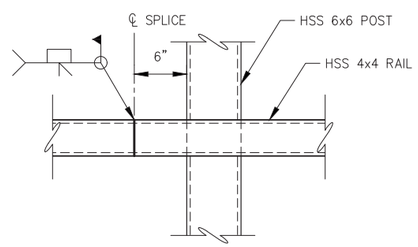

G - **TYPICAL RAIL SPLICE**

NOTE: LOCATE SPLICE IN OVERALL LENGTH OF RAILING AS REQ. FOR EASE OF CONSTRUCTION

CITY & BOROUGH OF JUNEAU DOCKS & HARBORS

REVISIONS

REV.	DATE	DESCRIPTION	DWN.	CKD.	APP.

PND ENGINEERS, INC.
9360 Glacier Highway Ste 100
Juneau, Alaska 99801
Phone: 907-586-2093
Fax: 907-586-2099
www.pndengineers.com

DESIGN: MDS CHECKED: CRS
DRAWN: KLL APPROVED: CRS
SCALE: NTS
DATE: 5/23/2019

STATE OF ALASKA 49TH — Charles R. Somerville CE-8845 — REGISTERED PROFESSIONAL ENGINEER

DOWNTOWN WATERFRONT IMPROVEMENTS PHASE I
CBJ CONTRACT NO. DH19-014

SHEET TITLE:
CONCRETE WALL SECTIONS AND MISCELLANEOUS RAILING DETAIL

S2.11

PND PROJECT NO.: 182045 C.A.N. NO.: AECC250

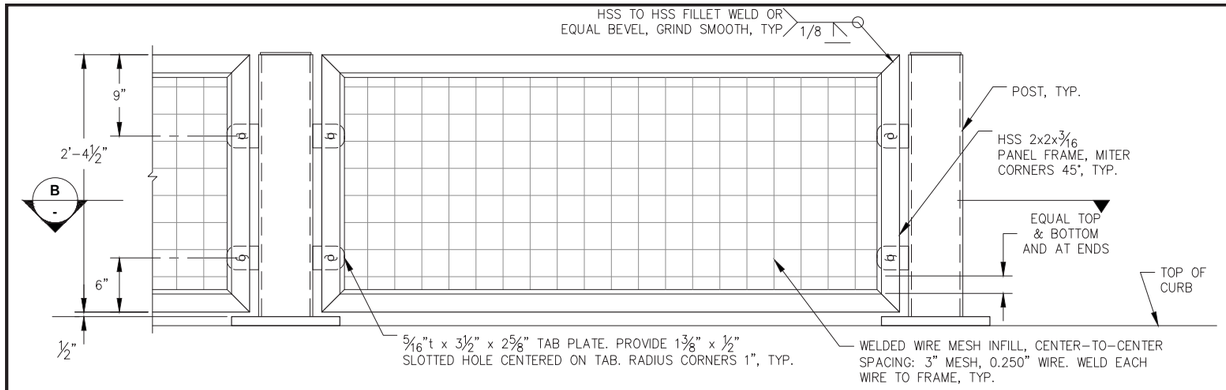

A - **TYPICAL RAILING PANEL FRAME ELEVATION**

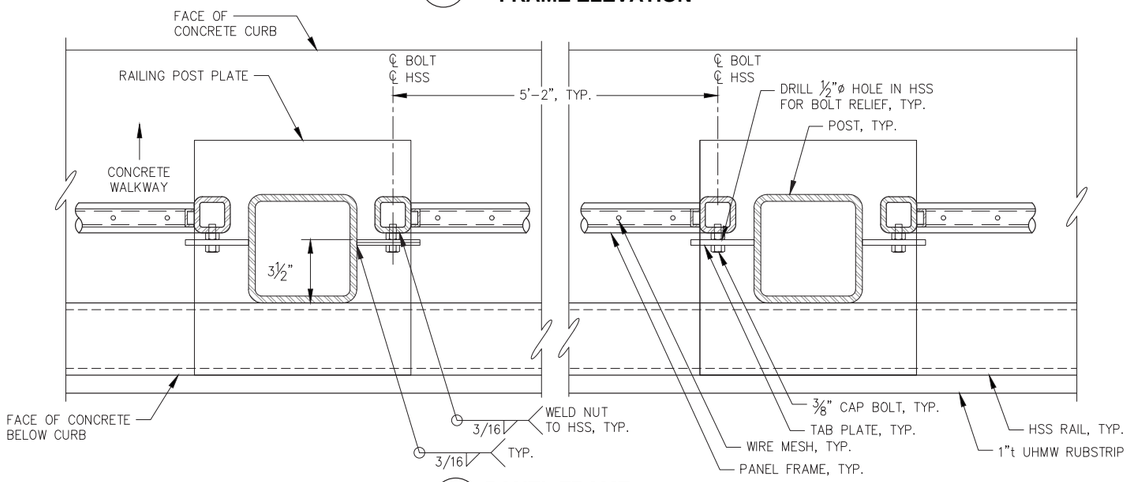

B - **PANEL FRAME CONNECTION DETAIL**

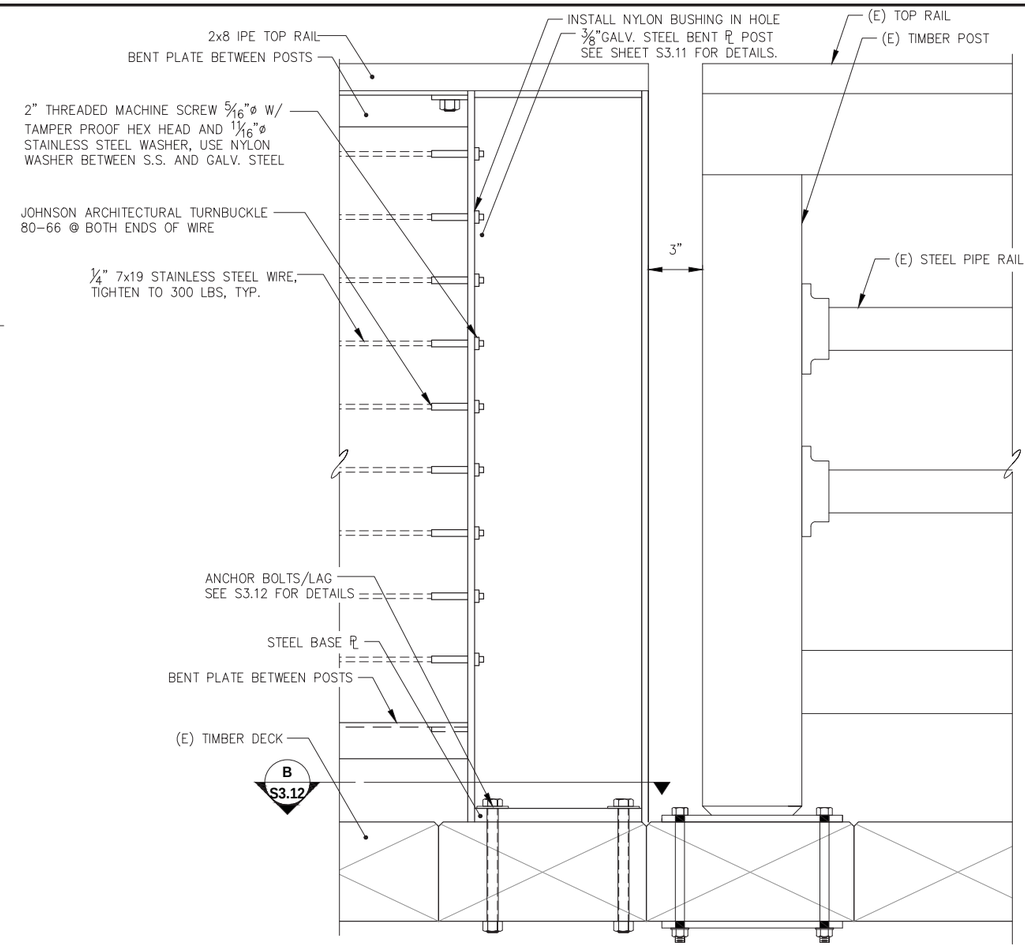

C S2.01 - **SEAWALK GUARDRAIL DETAILS**

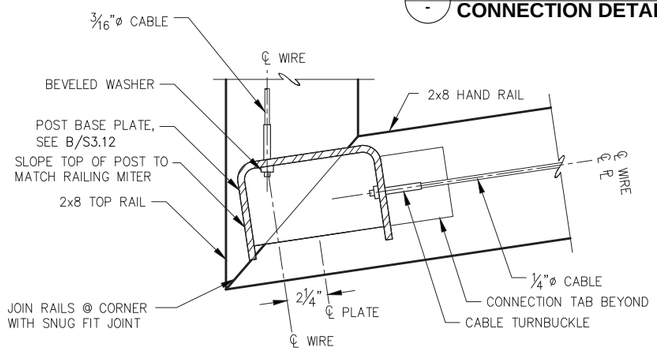

D S2.01 - **CORNER POST PLAN**

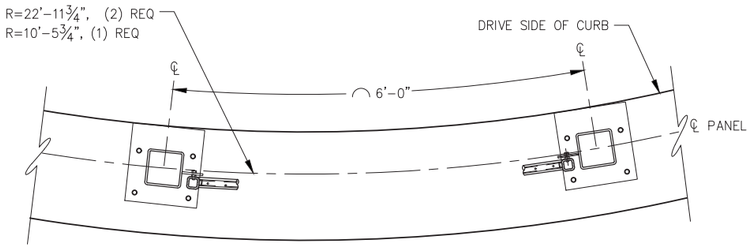

E - **PANEL FRAME CONNECTIN DETAIL**

NOTE: CONTRACTOR SHALL PROVIDE SHOP DRAWINGS OF PANEL FRAMES TO MATCH RADIUS OF CURB.

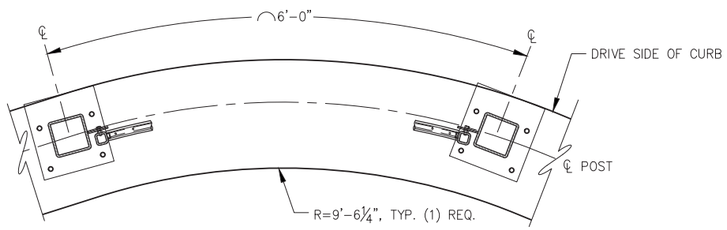

F - **PANEL FRAME CONNECTIN DETAIL**

NOTE: CONTRACTOR SHALL PROVIDE SHOP DRAWINGS OF PANEL FRAMES TO MATCH RADIUS OF CURB.

CITY & BOROUGH OF JUNEAU DOCKS & HARBORS

REVISIONS

REV.	DATE	DESCRIPTION	DWN.	CKD.	APP.

PND ENGINEERS, INC.
9360 Glacier Highway Ste 100
Juneau, Alaska 99801
Phone: 907-586-2093
Fax: 907-586-2099
www.pndengineers.com

DESIGN: MDS CHECKED: CRS
DRAWN: KLL APPROVED: CRS
SCALE: NTS
DATE: 5/23/2019

STATE OF ALASKA 49 TH Charles R. Somerville CE-8845 REGISTERED PROFESSIONAL ENGINEER

DOWNTOWN WATERFRONT IMPROVEMENTS PHASE I
CBJ CONTRACT NO. DH19-014

SHEET TITLE: **MISCELLANEOUS RAILING DETAIL**

S2.12

PND PROJECT NO.: 182045 C.A.N. NO.: AECC250

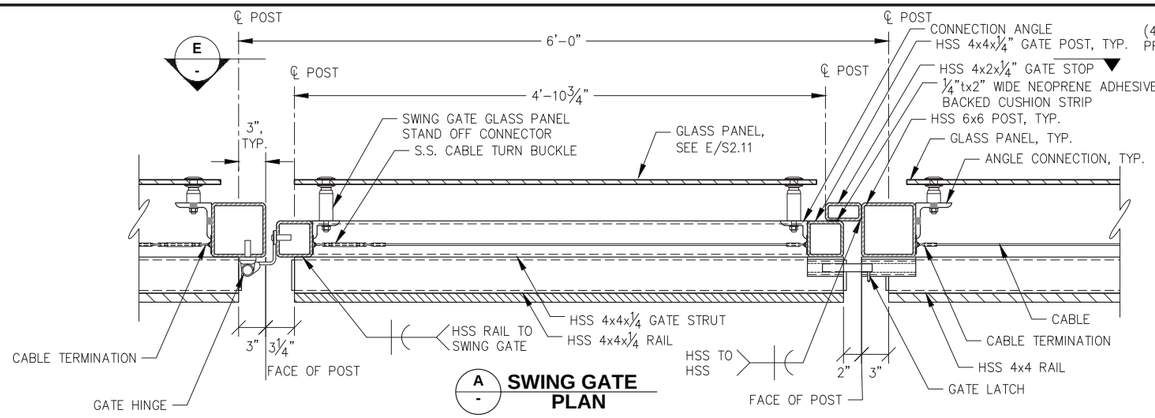

A SWING GATE PLAN

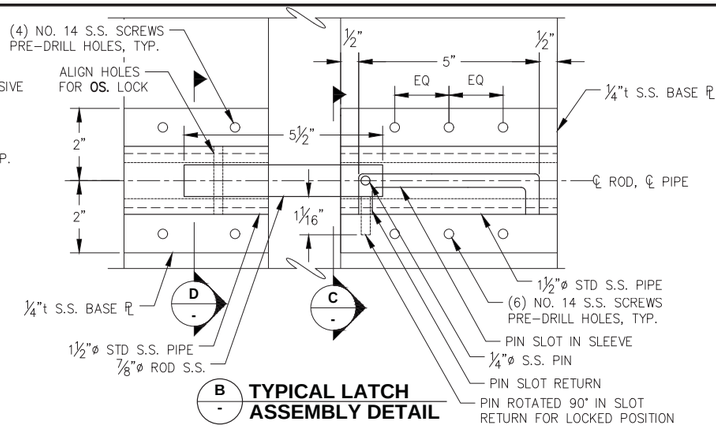

B TYPICAL LATCH ASSEMBLY DETAIL

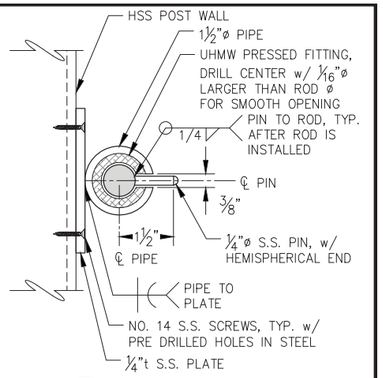

C ROD SLEEVE SECTION

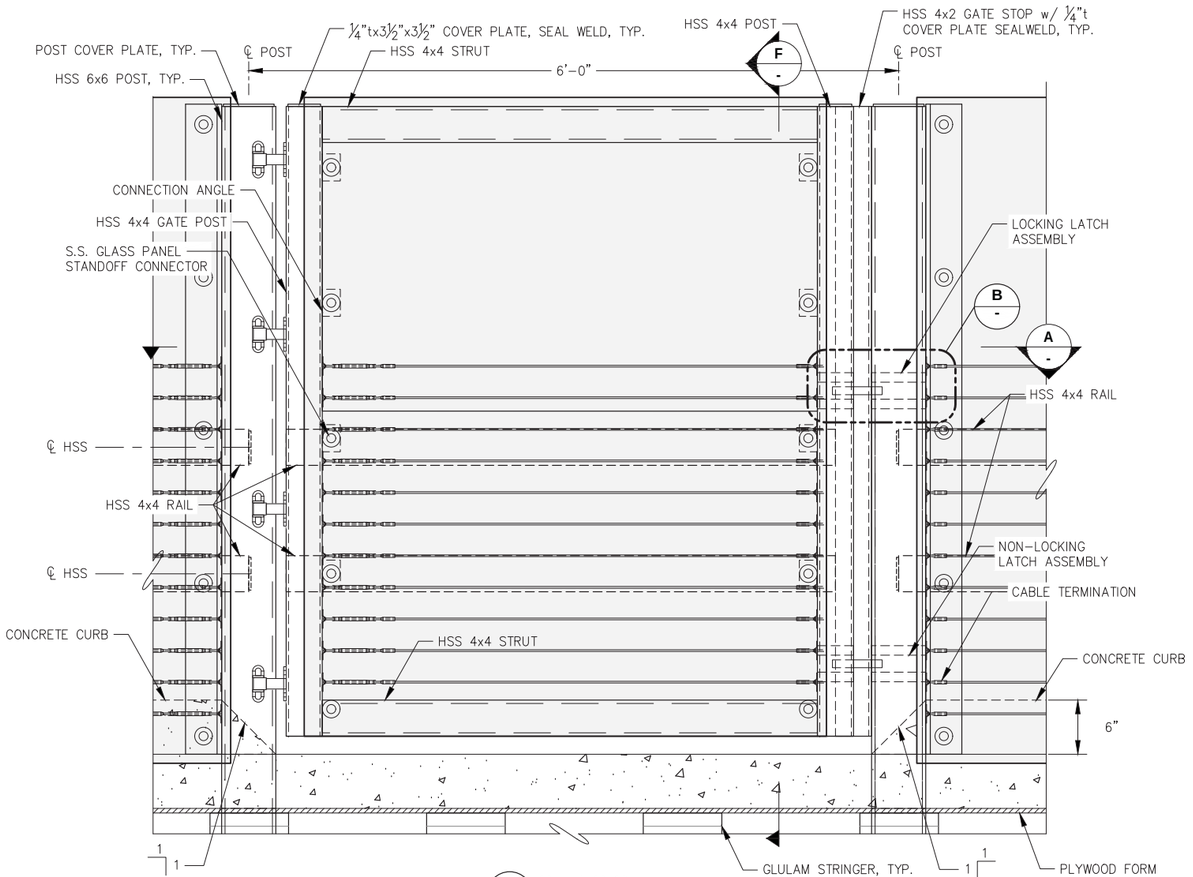

E SWING GATE ELEVATION

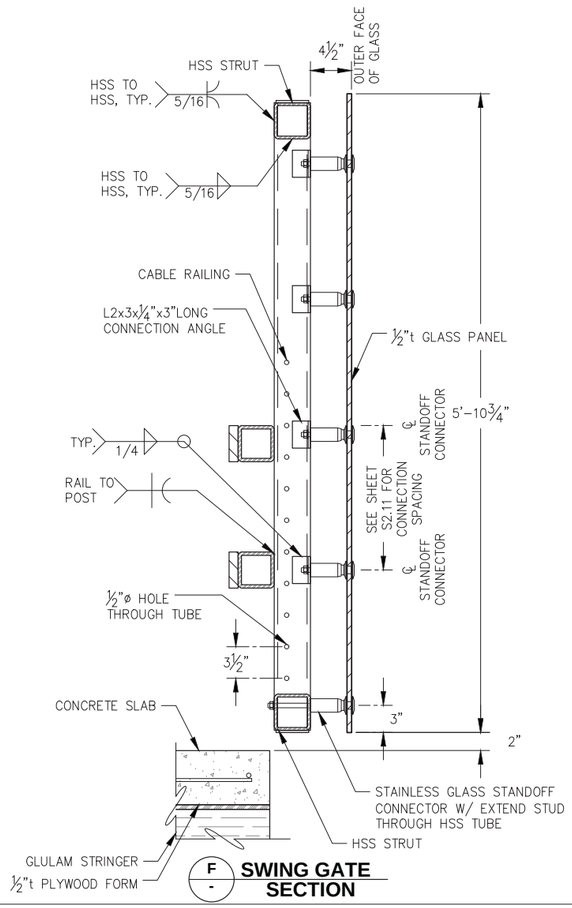

F SWING GATE SECTION

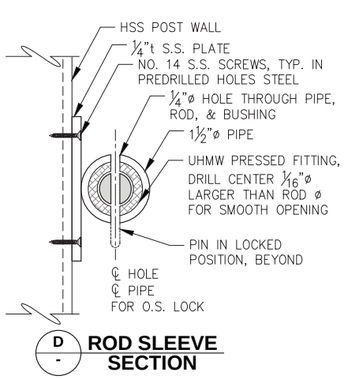

D ROD SLEEVE SECTION

NOTE:
1. FOR NON–LOCKING LATCH, NO HOLE REQUIRED ON RECEIVER SLEEVE.

2. CUT BUSHING TO MATCH STEEL PIPE SLOT @ BOTH ENDS OF SLOT, BUSHING MAY BE CUT AFTER INSTALLATION TO VERIFY ALIGNMENT.

CITY & BOROUGH OF JUNEAU DOCKS & HARBORS

REVISIONS

REV.	DATE	DESCRIPTION	DWN.	CKD.	APP.

PND ENGINEERS, INC.
9360 Glacier Highway Ste 100
Juneau, Alaska 99801
Phone: 907-586-2093
Fax: 907-586-2099
www.pndengineers.com

DESIGN: MDS CHECKED: CRS
DRAWN: KLL APPROVED: CRS
SCALE: NTS

STATE OF ALASKA 49TH — Charles R. Somerville CE-8845 REGISTERED PROFESSIONAL ENGINEER
DATE: 5/23/2019

DOWNTOWN WATERFRONT IMPROVEMENTS PHASE I
CBJ CONTRACT NO. DH19-014

SHEET TITLE: **SWING GATE PLAN, ELEVATION, AND SECTION**

PND PROJECT NO.: 182045 C.A.N. NO.: AECC250

S2.13

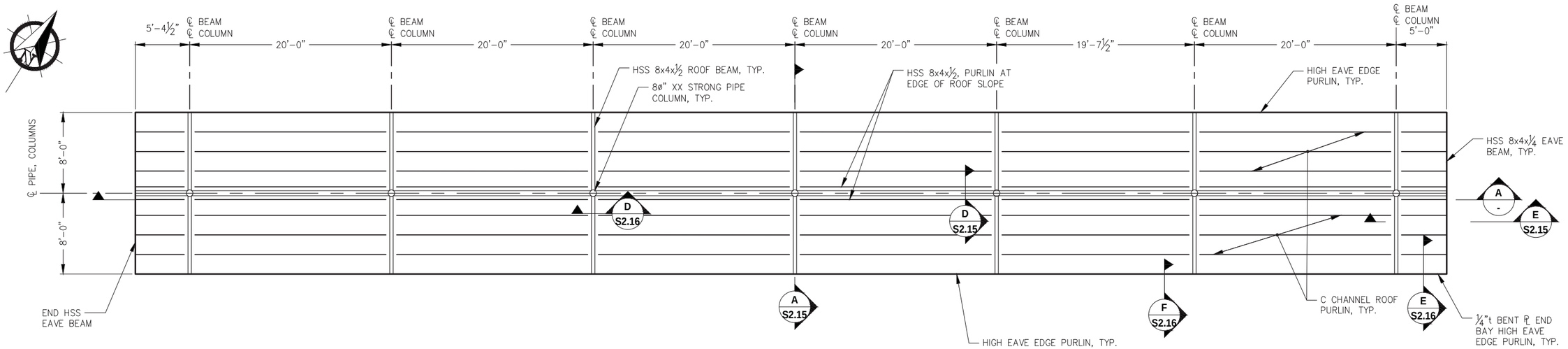

1 - **PARKING CANOPY ROOF FRAMING PLAN**

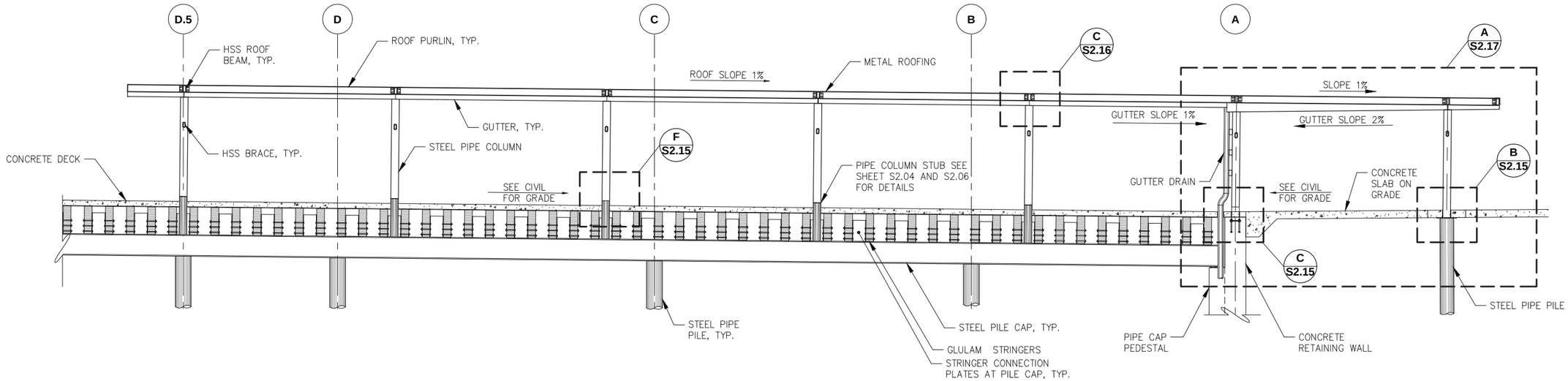

A - **PARKING CANOPY ELEVATION**

NOTE: SEE SHEET S2.04 FOR COLUMN ALIGNMENT w/ PILE CAP.

REVISIONS

REV.	DATE	DESCRIPTION	DWN.	CKD.	APP.

P N D ENGINEERS, INC.
9360 Glacier Highway Ste 100
Juneau, Alaska 99801
Phone: 907-586-2093
Fax: 907-586-2099
www.pndengineers.com

DESIGN: MDS CHECKED: CRS
DRAWN: KLL APPROVED: CRS
SCALE: SCALE IN FEET 0 5 10 FT.

STATE OF ALASKA 49 TH Charles R. Somerville CE-8845 REGISTERED PROFESSIONAL ENGINEER
DATE: 5/20/2019

DOWNTOWN WATERFRONT IMPROVEMENTS PHASE I
CBJ CONTRACT NO. DH19-014

SHEET TITLE: **PARKING CANOPY PLAN**

S2.14

PND PROJECT NO.: 182045 C.A.N. NO.: AECC250

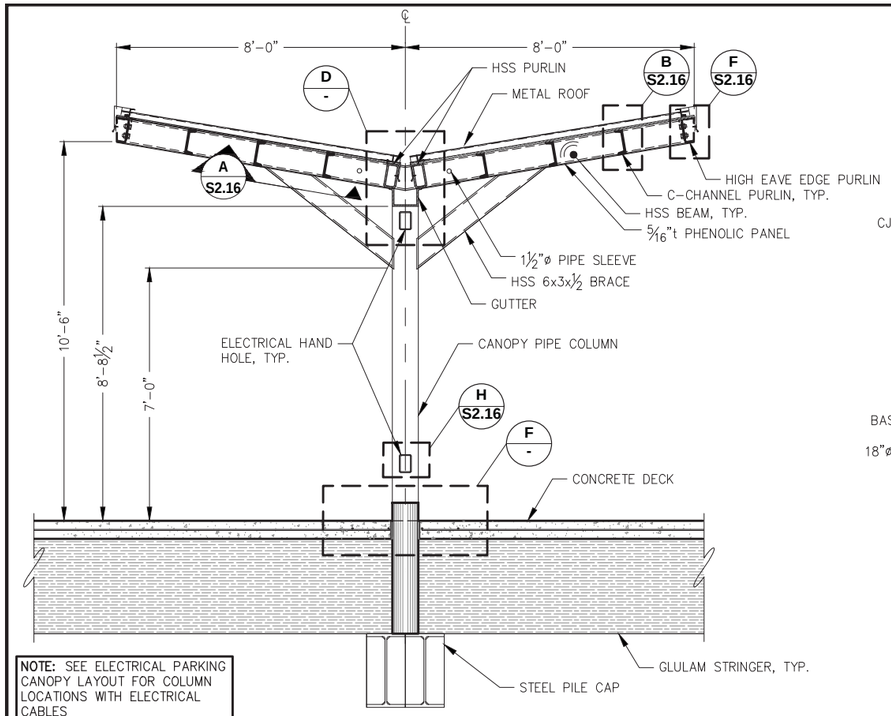

NOTE: SEE ELECTRICAL PARKING CANOPY LAYOUT FOR COLUMN LOCATIONS WITH ELECTRICAL CABLES

A S2.14 TYPICAL PARKING CANOPY SECTION

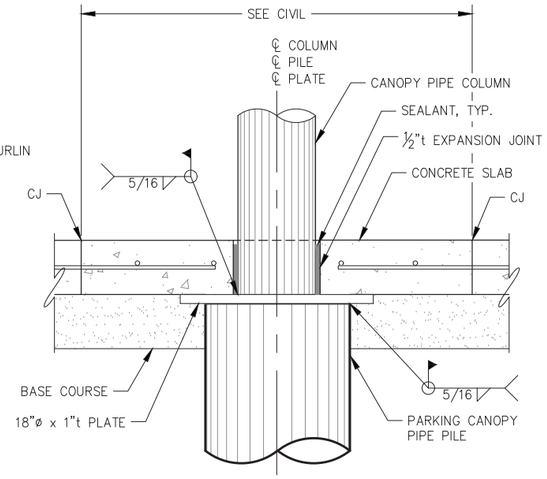

B S2.14 SHORE SIDE CANOPY CONCRETE COLLAR

(1 EA REQUIRED)

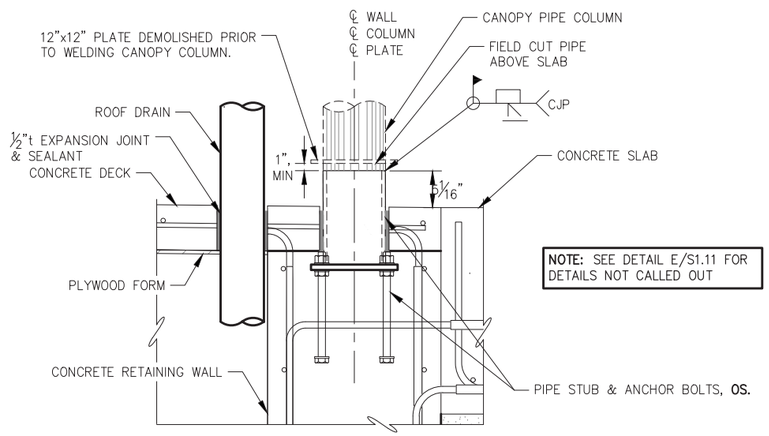

C S2.14 COLUMN BASE CONNECTION DETAIL AT RETAINING WALL

(1 EA REQUIRED)

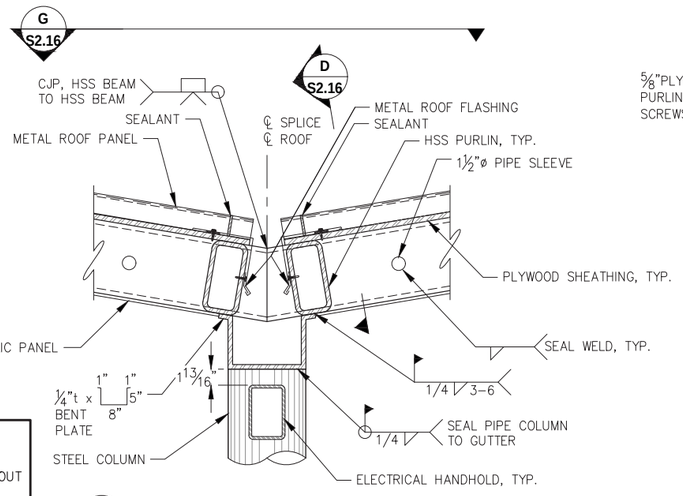

NOTE: SEE ELECTRICAL PARKING CANOPY LAYOUT FOR COLUMN LOCATIONS WITH ELECTRICAL CABLES

D S2.14 TYPICAL PARKING CANOPY ROOF BEAM AND GUTTER DETAIL

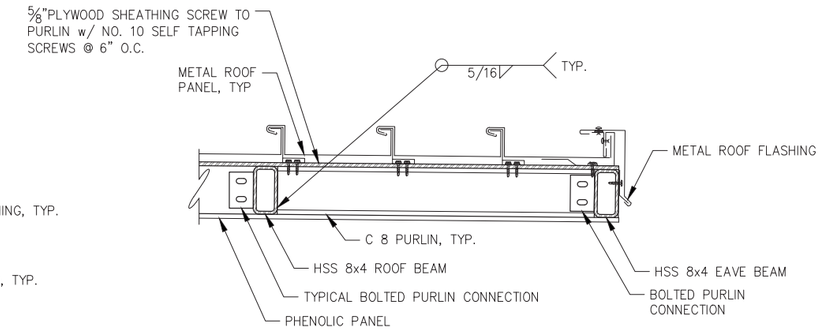

E S2.14 END EAVE DETAIL

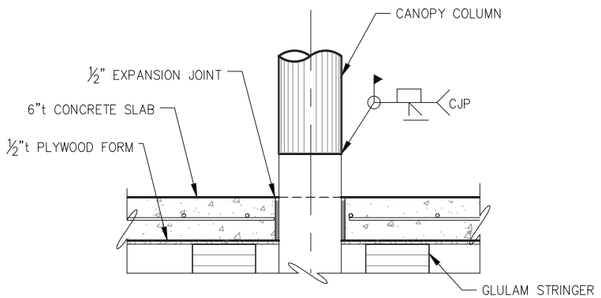

F - CANOPY COLUMN BASE CONNECTION DETAIL

REVISIONS

REV.	DATE	DESCRIPTION	DWN.	CKD.	APP.

P N D ENGINEERS, INC.
9360 Glacier Highway Ste 100
Juneau, Alaska 99801
Phone: 907-586-2093
Fax: 907-586-2099
www.pndengineers.com

DESIGN: MDS CHECKED: CRS
DRAWN: KLL APPROVED: CRS
SCALE: NTS
DATE: 5/23/2019

STATE OF ALASKA 49TH C.R. Somerville Charles R. Somerville CE-8845 REGISTERED PROFESSIONAL ENGINEER

DOWNTOWN WATERFRONT IMPROVEMENTS PHASE I
CBJ CONTRACT NO. DH19-014

SHEET TITLE:
PARKING CANOPY SECTIONS AND DETAILS

PND PROJECT NO.: 182045 C.A.N. NO.: AECC250

S2.15

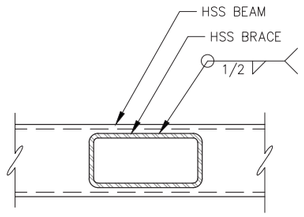

A S2.15 TYPICAL CANOPY BRACE TO BEAM CONNECTION

NOTE:
CONNECT BRACE COLUMN SIMILAR, NOTCH BRACES TO FORM TIGHT FIT w/ ROUND PIPE COLUMN.

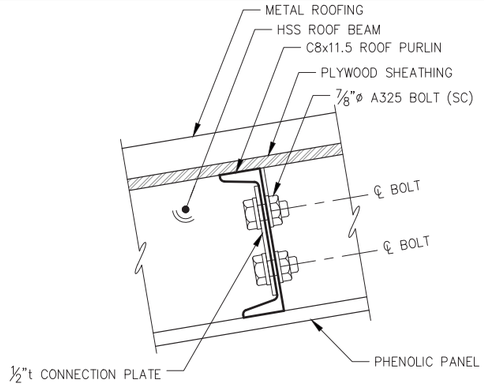

B S2.15 TYPICAL ROOF PURLIN TO ROOF BEAM CONNECTION

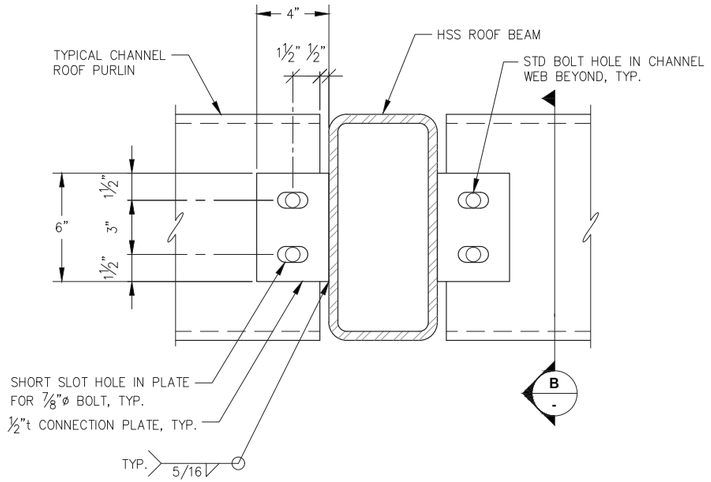

C S2.14 TYPICAL ROOF PURLIN TO BEAM CONNECTION

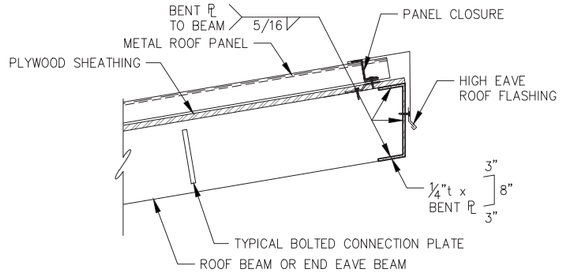

E S2.14 ROOF EAVE SECTION AT END BAY PURLINS

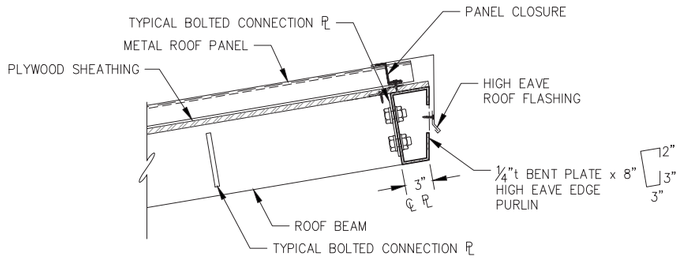

F S2.14 TYPICAL HIGH EAVE ROOF SECTION

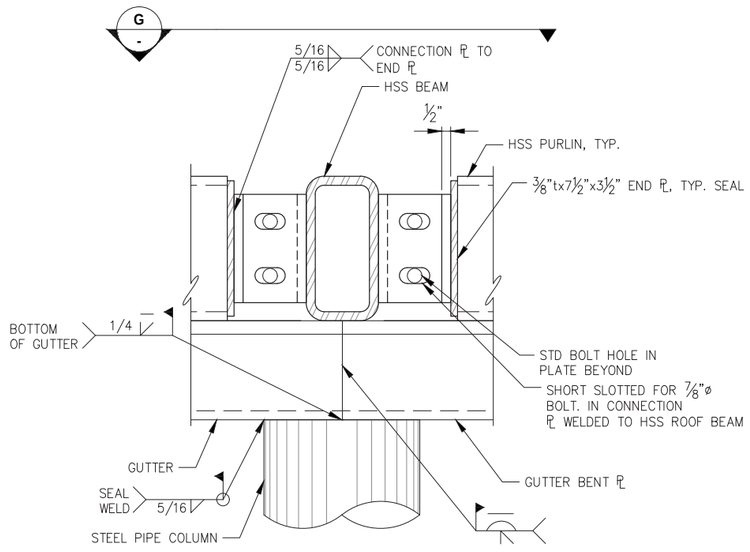

D S2.14 TYPICAL GUTTER SPLICE AND HSS PURLIN CONNECTION

NOTE:
1. CONTRACTOR TO LOCATE GUTTER FIELD SPLICE LOCATIONS. SPLICES SHALL BE LOCATED AT COLUMNS.
2. ALL HSS MEMBRANE SHALL HAVE ½"ø DRAIN HOLES AT LOWEST POINTS. DRAIN HOLES SHALL BE SHOWN ON SHOP DRAWINGS PRIOR TO FABRICATION.

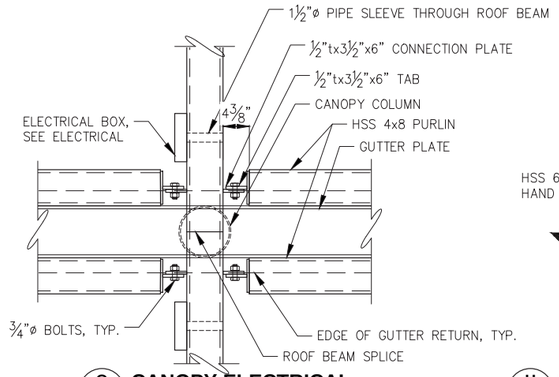

G - CANOPY ELECTRICAL PARTIAL PLAN

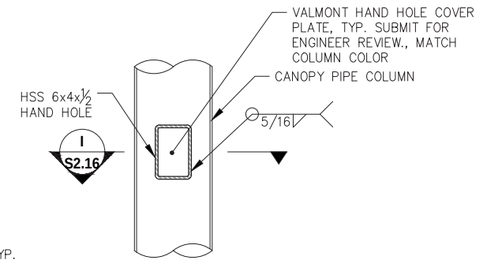

H - TYPICAL ELECTRICAL HAND HOLE

(3) REQ., TWO ON COLUMN ONE ON COLUMN STUB

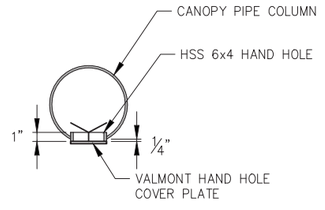

I - ELECTRICAL HAND HOLE SECTION

REVISIONS

REV.	DATE	DESCRIPTION	DWN.	CKD.	APP.

PND ENGINEERS, INC.
9360 Glacier Highway Ste 100
Juneau, Alaska 99801
Phone: 907-586-2093
Fax: 907-586-2099
www.pndengineers.com

DESIGN: MDS CHECKED: CRS
DRAWN: KLL APPROVED: CRS
SCALE: NTS
DATE: 5/20/2019

STATE OF ALASKA 49 TH — Charles R. Somerville CE-8845 — REGISTERED PROFESSIONAL ENGINEER

DOWNTOWN WATERFRONT IMPROVEMENTS PHASE I
CBJ CONTRACT NO. DH19-014

SHEET TITLE: **PARKING CANOPY SECTIONS AND DETAILS**

PND PROJECT NO.: 182045 C.A.N. NO.: AECC250

S2.16

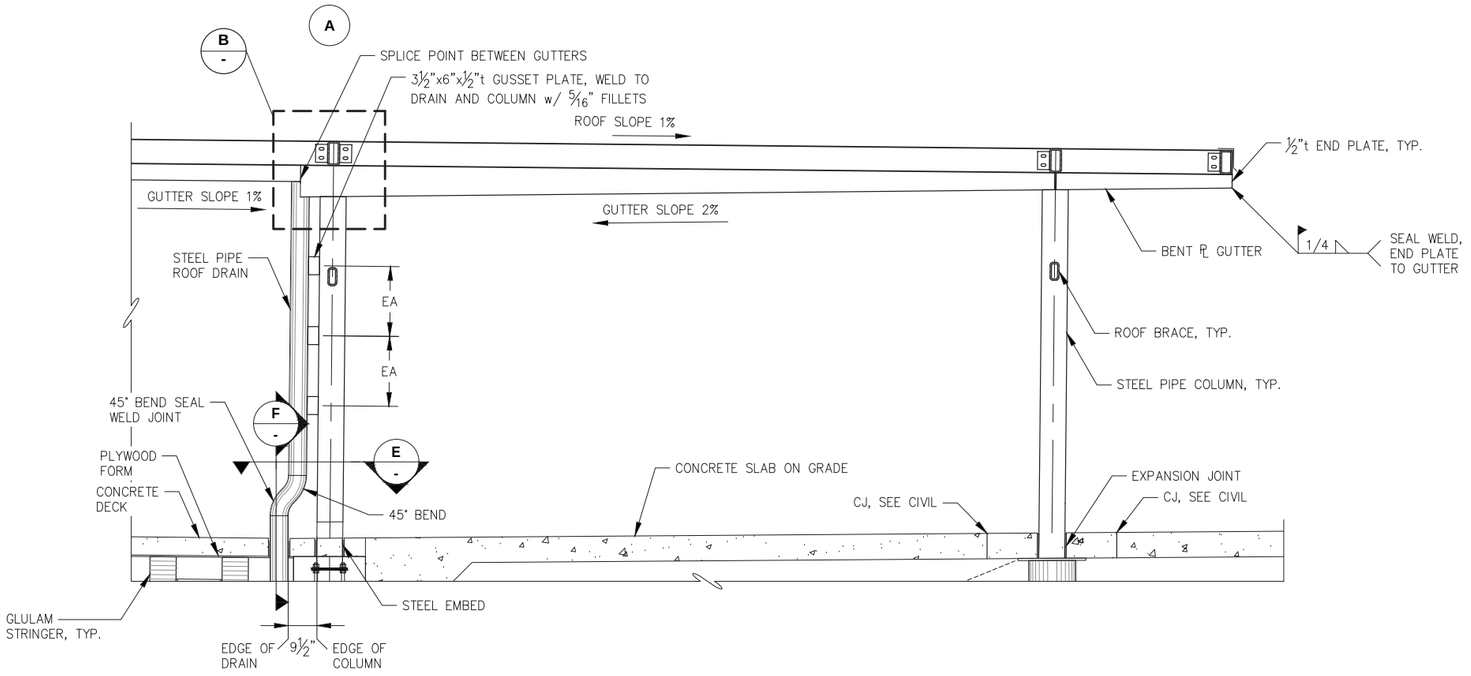

A S2.14 **CANOPY PARTIAL ELEVATION**

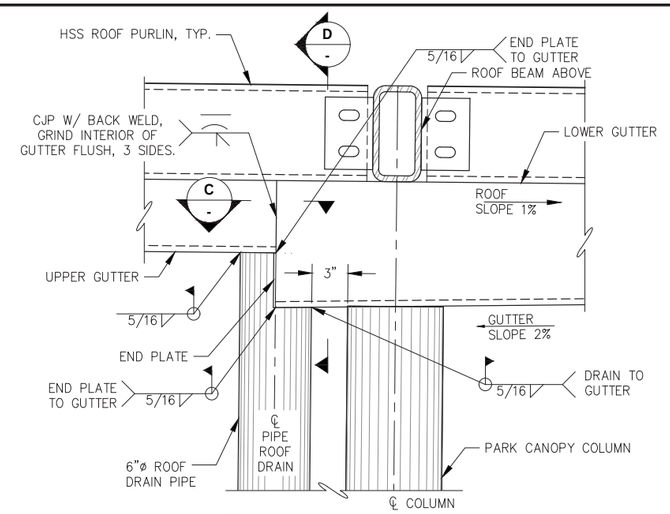

B - **GUTTER TO DRAIN DETAIL**

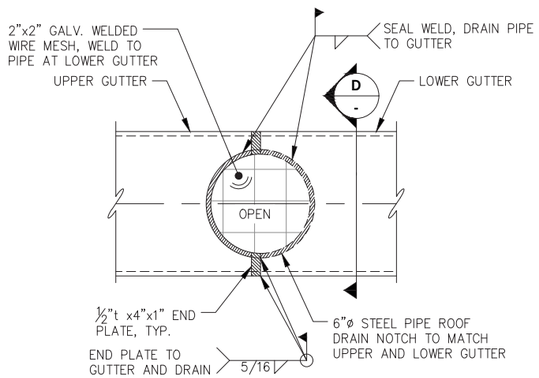

C - **GUTTER TO DRAIN SECTION**

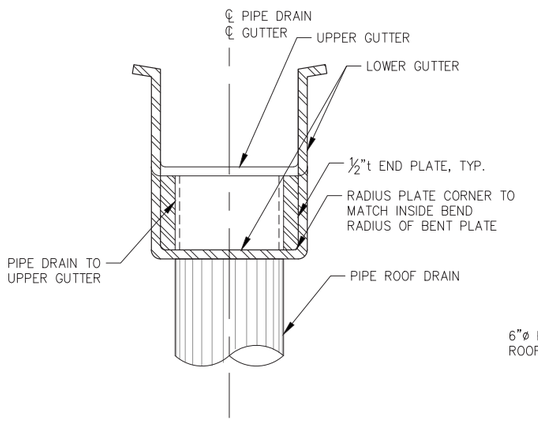

D - **GUTTER TO DRAIN SECTION**

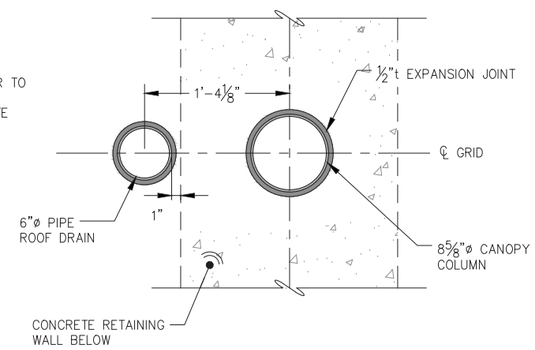

E - **PEDESTAL PLAN**

F - **PIPE DETAIL BELOW CONCRETE DECK**

REVISIONS

REV.	DATE	DESCRIPTION	DWN.	CKD.	APP.

PND ENGINEERS, INC.
9360 Glacier Highway Ste 100
Juneau, Alaska 99801
Phone: 907-586-2093
Fax: 907-586-2099
www.pndengineers.com

DESIGN: MDS CHECKED: CRS
DRAWN: KLL APPROVED: CRS
SCALE: NTS
DATE: 5/23/2019

STATE OF ALASKA 49TH — Charles R. Somerville CE-8845 — REGISTERED PROFESSIONAL ENGINEER

DOWNTOWN WATERFRONT IMPROVEMENTS PHASE I
CBJ CONTRACT NO. DH19-014

SHEET TITLE: **PARKING CANOPY SECTIONS AND DETAILS**

PND PROJECT NO.: 182045 C.A.N. NO.: AECC250

S2.17

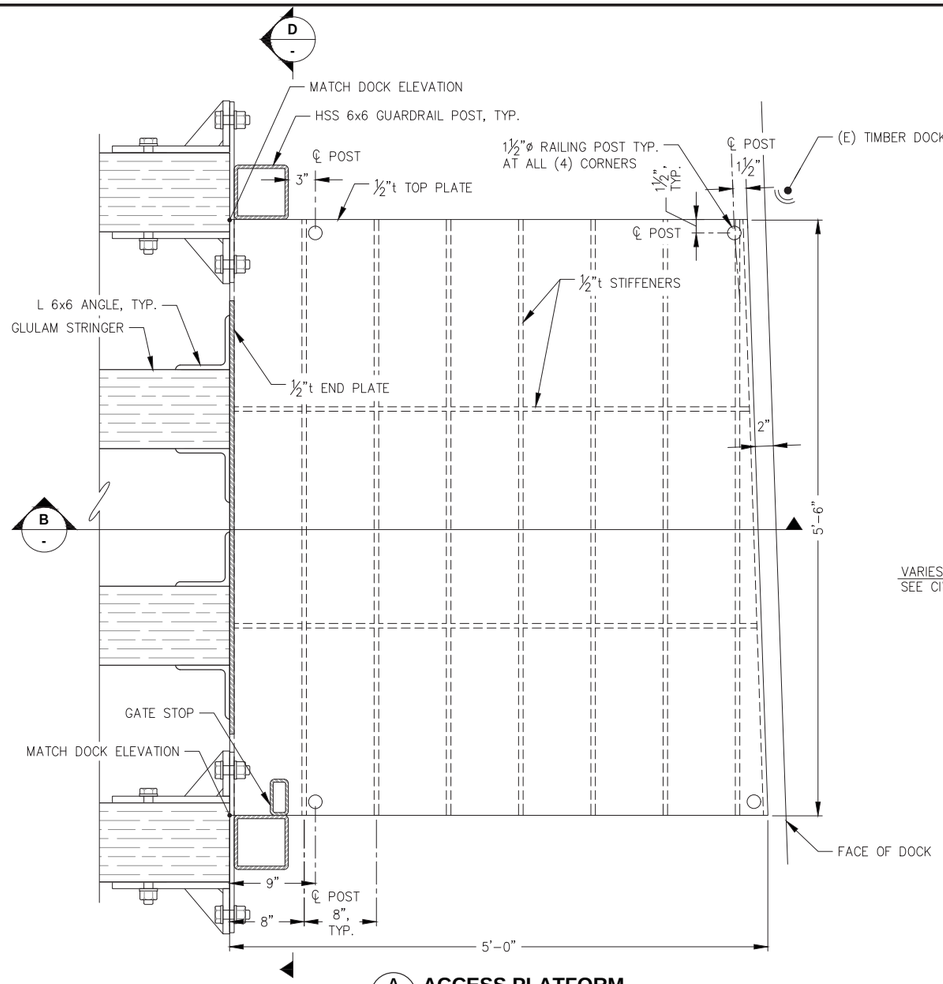

A - ACCESS PLATFORM PLAN

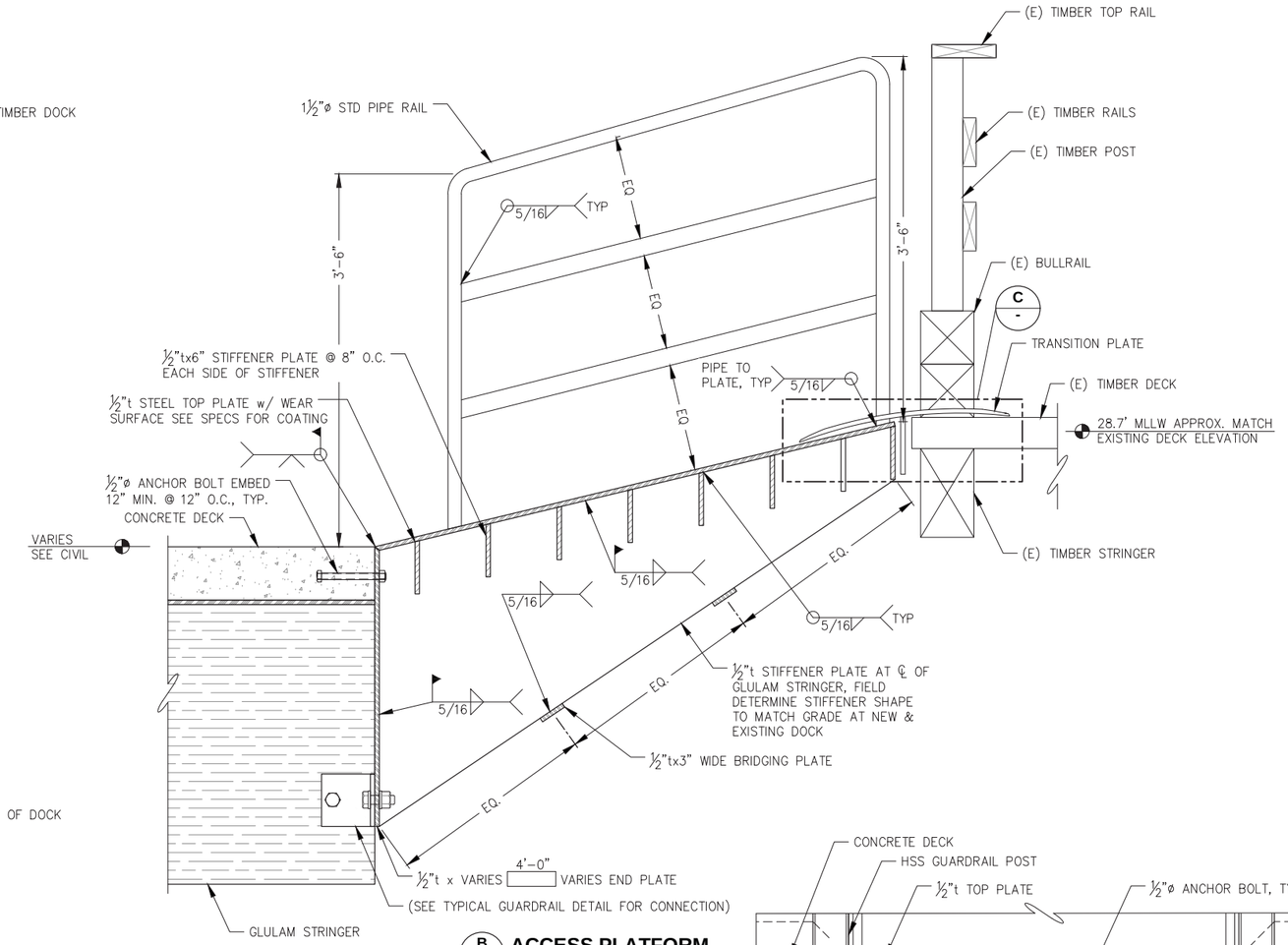

B - ACCESS PLATFORM SECTION

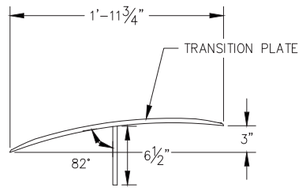

C - TRANSITION PLATE DETAIL

NOTE: FOR DETAILS NOT CALLED OUT, SEE A/S1.15

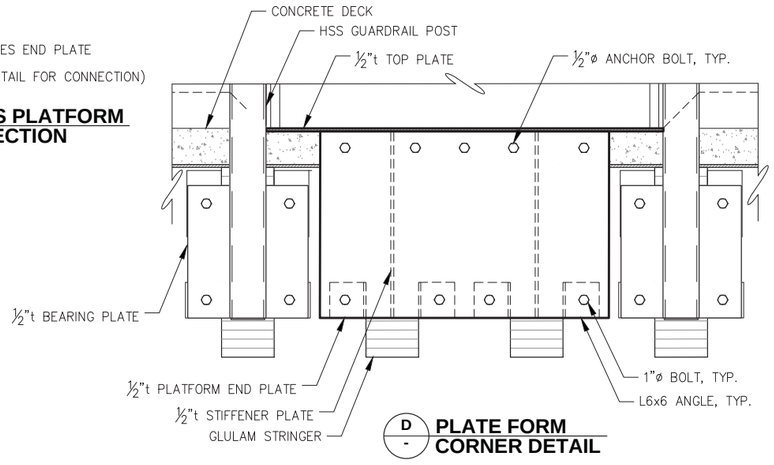

D - PLATE FORM CORNER DETAIL

CITY & BOROUGH OF JUNEAU DOCKS & HARBORS

REVISIONS

REV.	DATE	DESCRIPTION	DWN.	CKD.	APP.

PND ENGINEERS, INC.
9360 Glacier Highway Ste 100
Juneau, Alaska 99801
Phone: 907-586-2093
Fax: 907-586-2099
www.pndengineers.com

STATE OF ALASKA 49TH Charles R. Somerville CE-8845 REGISTERED PROFESSIONAL ENGINEER

DESIGN: MDS CHECKED: CRS
DRAWN: KLL APPROVED: CRS
SCALE: NTS
DATE: 5/29/2019

DOWNTOWN WATERFRONT IMPROVEMENTS PHASE I
CBJ CONTRACT NO. DH19-014

SHEET TITLE: **ACCESS PLATFORM**

PND PROJECT NO.: 182045 C.A.N. NO.: AECC250

S2.18

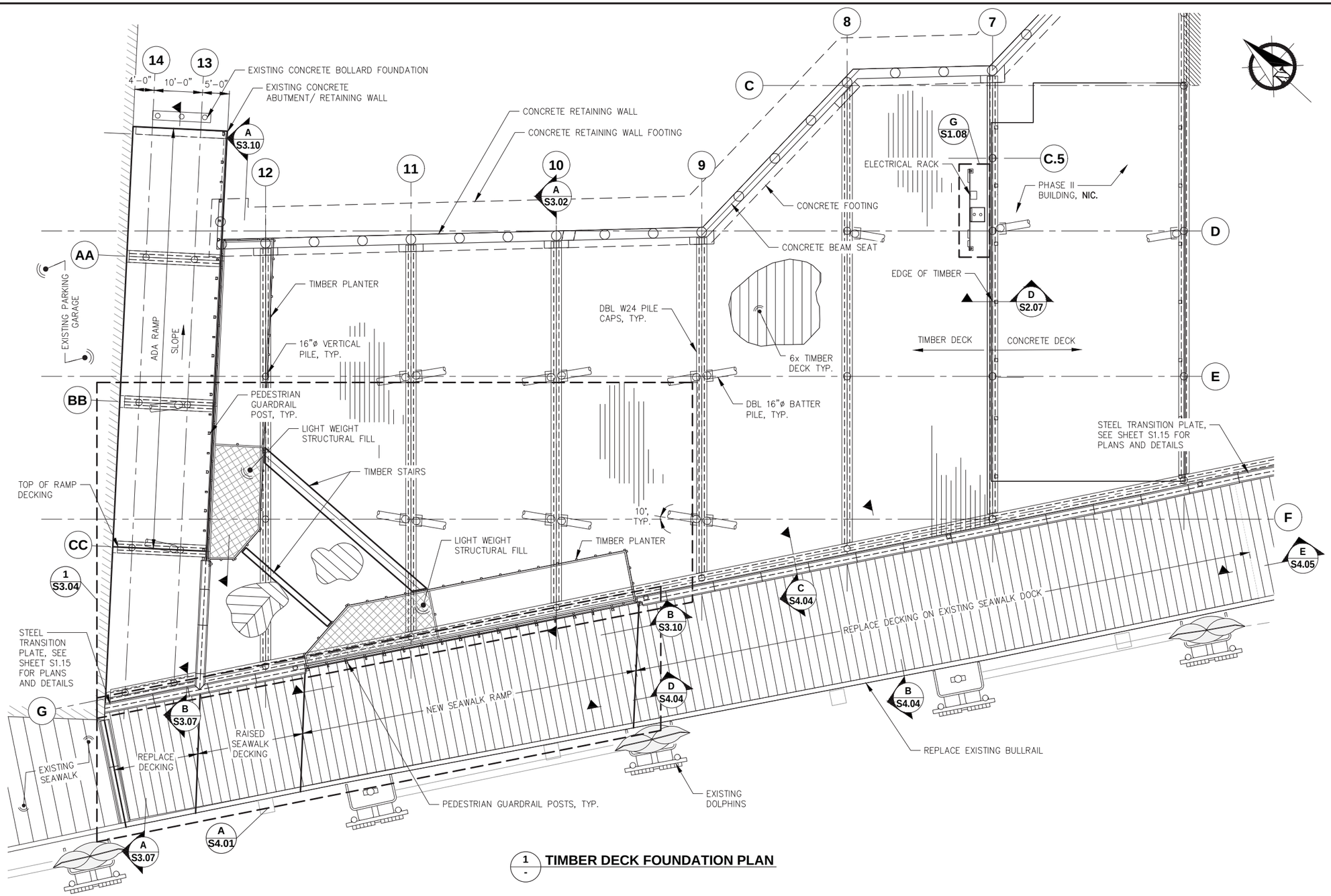

1 - **TIMBER DECK FOUNDATION PLAN**

REVISIONS

REV.	DATE	DESCRIPTION	DWN.	CKD.	APP.

PND ENGINEERS, INC.
9360 Glacier Highway Ste 100
Juneau, Alaska 99801
Phone: 907-586-2093
Fax: 907-586-2099
www.pndengineers.com

DESIGN: MDS CHECKED: CRS
DRAWN: KLL APPROVED: CRS
SCALE: SCALE IN FEET 0 10 20 FT.

STATE OF ALASKA 49 TH
Charles R. Somerville CE-8845
REGISTERED PROFESSIONAL ENGINEER
DATE: 5/23/2019

DOWNTOWN WATERFRONT IMPROVEMENTS PHASE I
CBJ CONTRACT NO. DH19-014

SHEET TITLE: **TIMBER DECK PARTIAL PLAN**

PND PROJECT NO.: 182045 C.A.N. NO.: AECC250

S3.01

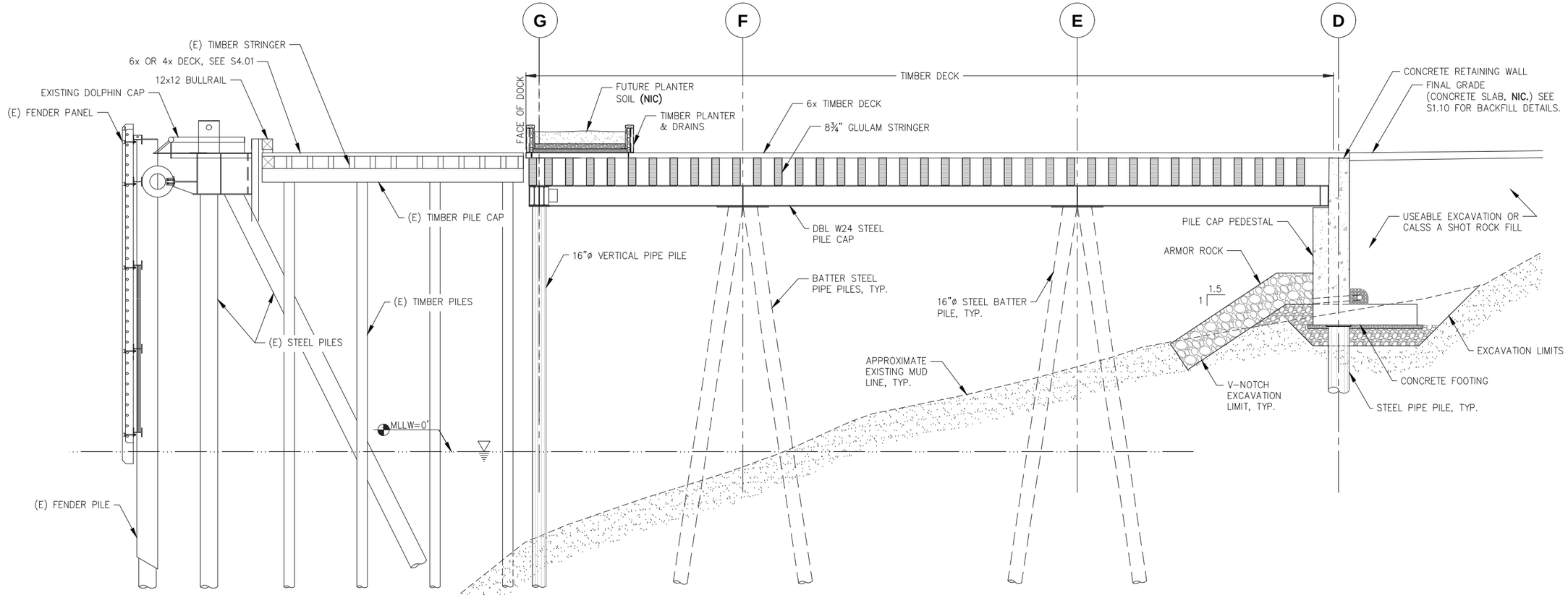

A / S3.01 TIMBER DECK SECTION AT GRID 10

REVISIONS

REV.	DATE	DESCRIPTION	DWN.	CKD.	APP.

PND ENGINEERS, INC.
9360 Glacier Highway Ste 100
Juneau, Alaska 99801
Phone: 907-586-2093
Fax: 907-586-2099
www.pndengineers.com

DESIGN: MDS CHECKED: CRS
DRAWN: KLL APPROVED: CRS
SCALE: SCALE IN FEET 0 5 10 FT.

STATE OF ALASKA 49TH Charles R. Somerville CE-8845 REGISTERED PROFESSIONAL ENGINEER
DATE: 5/23/2019

DOWNTOWN WATERFRONT IMPROVEMENTS PHASE I
CBJ CONTRACT NO. DH19-014

SHEET TITLE: **TIMBER DECK SECTION**

S3.02

PND PROJECT NO.: 182045 C.A.N. NO.: AECC250

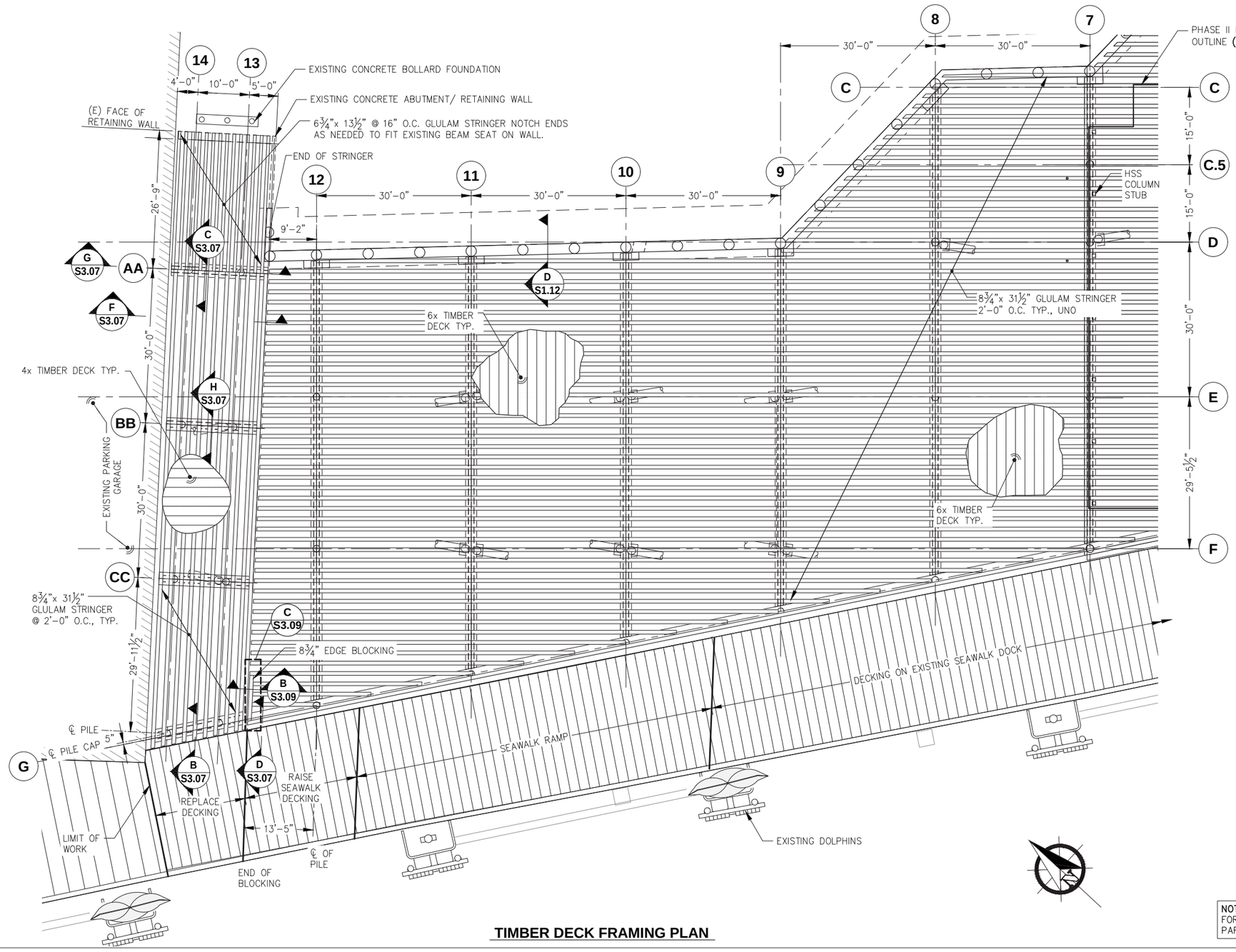

TIMBER DECK FRAMING PLAN

NOTE: OVER FRAMING NOT SHOWN THIS SHEET FOR CLARITY, SEE S3.04 FOR OVER FRAMING PARTIAL PLAN

CITY & BOROUGH OF JUNEAU — DOCKS & HARBORS

REVISIONS

REV.	DATE	DESCRIPTION	DWN.	CKD.	APP.

PND ENGINEERS, INC.
9360 Glacier Highway Ste 100
Juneau, Alaska 99801
Phone: 907-586-2093
Fax: 907-586-2099
www.pndengineers.com

DESIGN: MDS CHECKED: CRS
DRAWN: KLL APPROVED: CRS
SCALE: SCALE IN FEET 0 10 20 FT.

STATE OF ALASKA 49TH — Charles R. Somerville CE-8845 — REGISTERED PROFESSIONAL ENGINEER
DATE: 5/23/2019

DOWNTOWN WATERFRONT IMPROVEMENTS PHASE I
CBJ CONTRACT NO. DH19-014

SHEET TITLE: **TIMBER DECK FRAMING PLAN**

PND PROJECT NO.: 182045 C.A.N. NO.: AECC250

S3.03

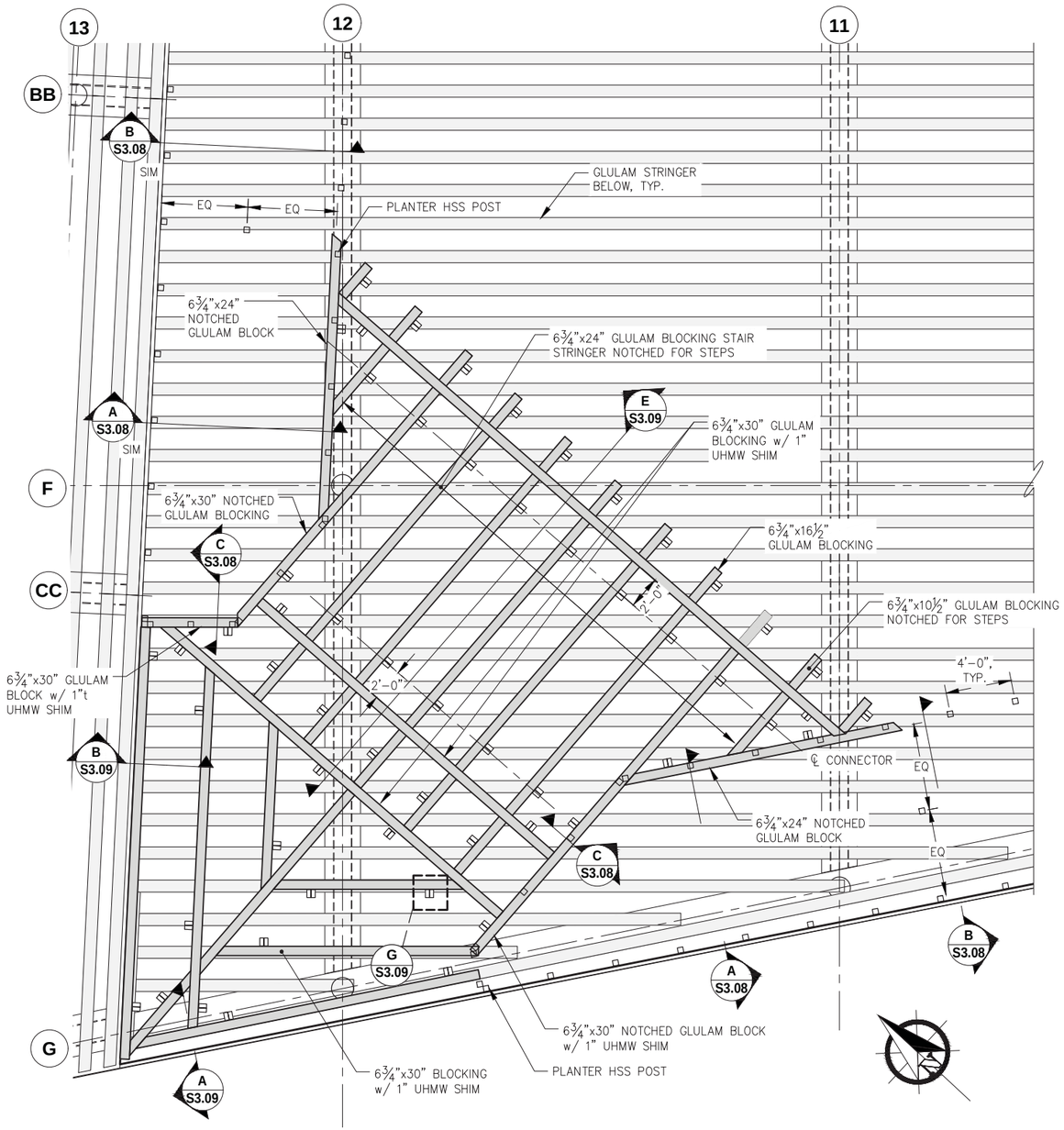

1 S3.01 **TIMBER DECK OVER FRAMING PLAN**

NOTE: ◫ INDICATES OVER FRAME CONNECTION BRACKET LOCATION
MEMBERS LESS THAN 4' LONG ONLY REQUIRE (1) CONNECTION BRACKET @ CENTER

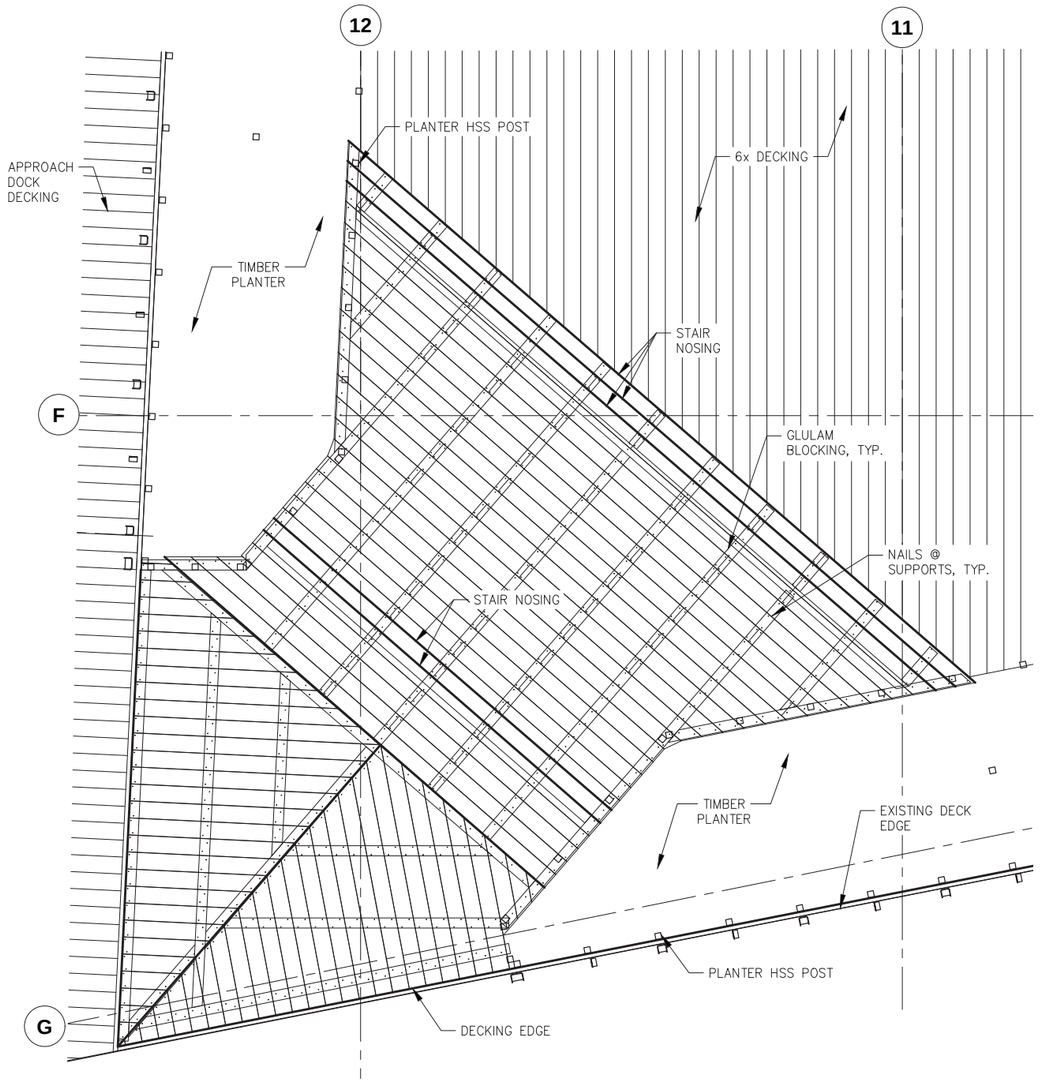

2 - **TIMBER DECKING PLAN**

NOTE: OVER FRAMING DECKING IS 4x TIMBER

REVISIONS

REV.	DATE	DESCRIPTION	DWN.	CKD.	APP.

P N D ENGINEERS, INC.
9360 Glacier Highway Ste 100
Juneau, Alaska 99801
Phone: 907-586-2093
Fax: 907-586-2099
www.pndengineers.com

DESIGN: MDS CHECKED: CRS
DRAWN: KLL APPROVED: CRS
SCALE: SCALE IN FEET 0 10 20 FT.
DATE: 5/23/2019

STATE OF ALASKA 49TH Charles R. Somerville CE-8845 REGISTERED PROFESSIONAL ENGINEER

DOWNTOWN WATERFRONT IMPROVEMENTS PHASE I
CBJ CONTRACT NO. DH19-014

SHEET TITLE: **TIMBER DECK OVER FRAMING**

S3.04

PND PROJECT NO.: 182045 C.A.N. NO.: AECC250

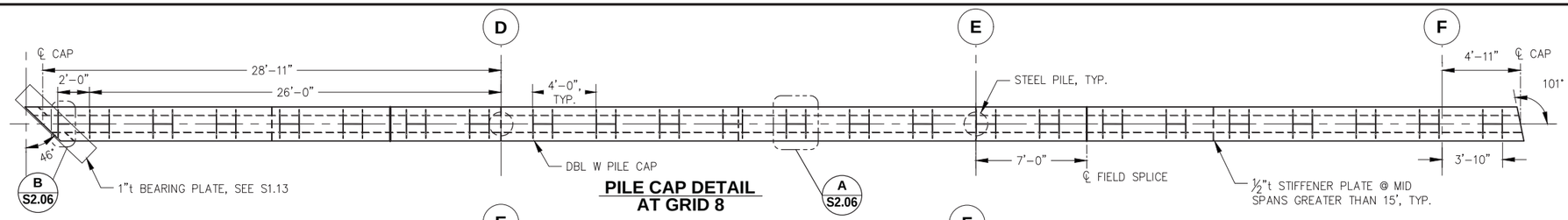

PILE CAP DETAIL AT GRID 8

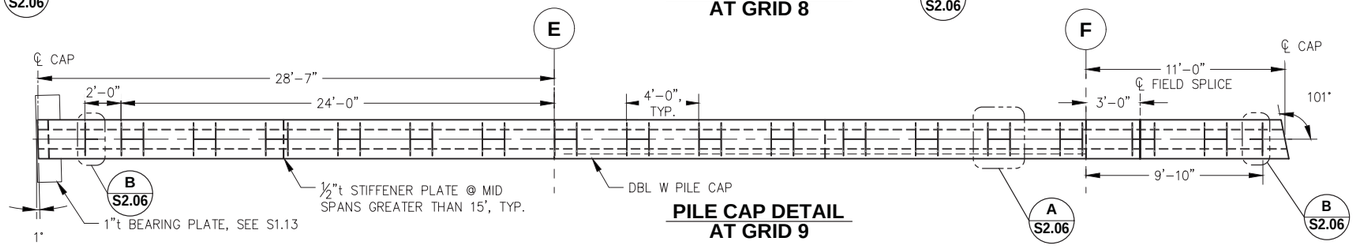

PILE CAP DETAIL AT GRID 9

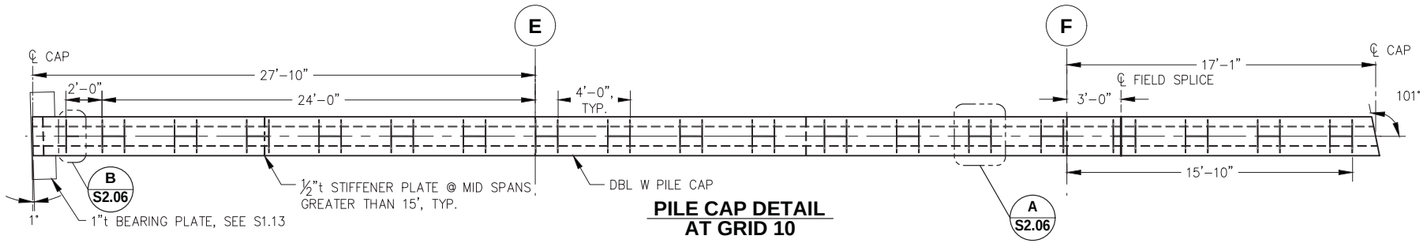

PILE CAP DETAIL AT GRID 10

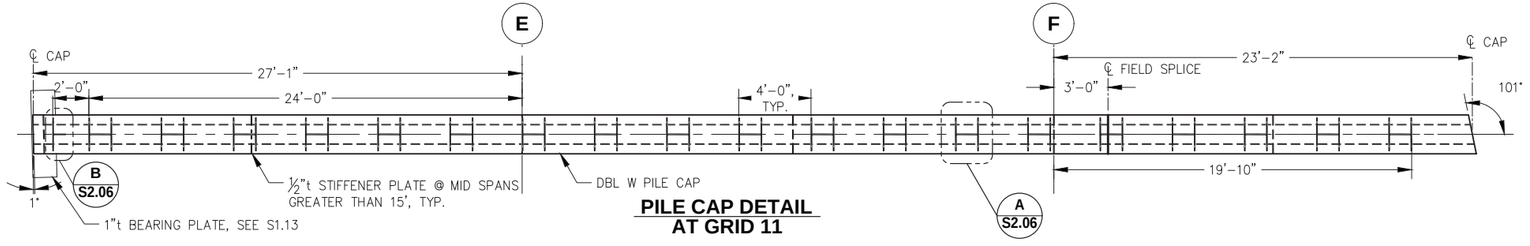

PILE CAP DETAIL AT GRID 11

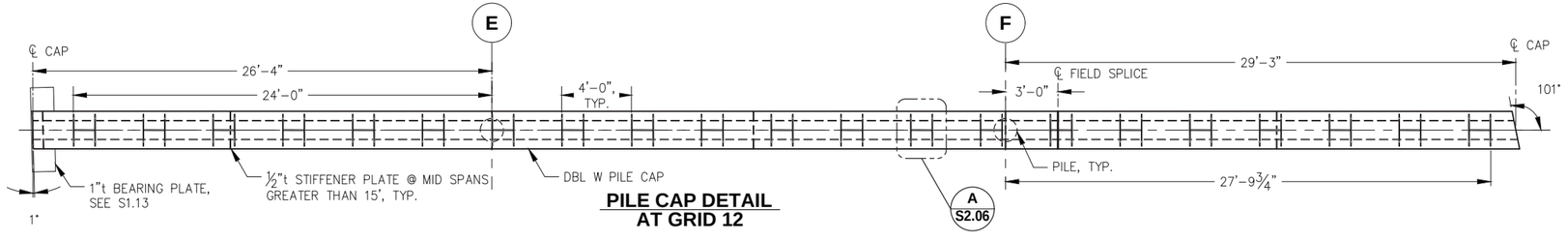

PILE CAP DETAIL AT GRID 12

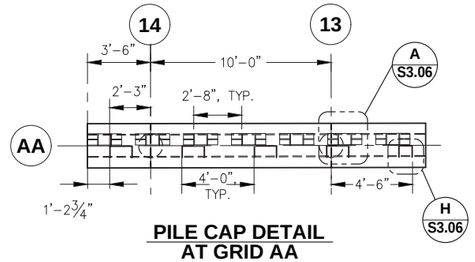

PILE CAP DETAIL AT GRID AA

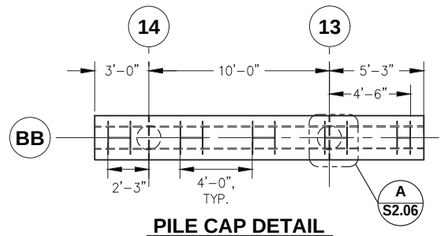

PILE CAP DETAIL AT GRID BB

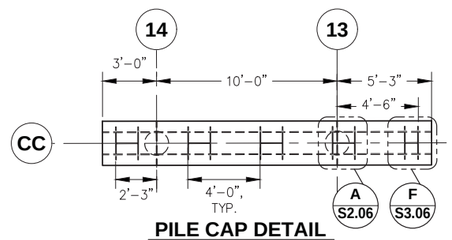

PILE CAP DETAIL AT GRID CC

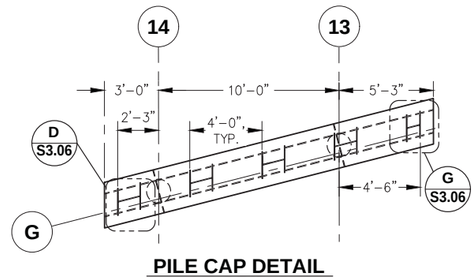

PILE CAP DETAIL AT GRID G

NOTE:
1. SHOP SPLICE AS REQUIRED FOR SECTIONS TO FIT IN GALVANIZING TANKS.
2. ALL PLATE DIMENSIONS ARE TO THE OUTSIDE OF SIDE PLATE, UNLESS NOTED OTHERWISE
3. ALL PILE CAPS ARE DBL W24x131, UNLESS OTHERWISE NOTED
4. ONE STIFFENER PLATE SHALL BE LOCATED AT ℄ EACH PILE, AND ONE PLATE AT MIDSPAN BETWEEN PILES AT PILE SPACING GREATER THAN 15' O.C.

CITY & BOROUGH OF JUNEAU — DOCKS & HARBORS

REVISIONS

REV.	DATE	DESCRIPTION	DWN.	CKD.	APP.

PND ENGINEERS, INC.
9360 Glacier Highway Ste 100
Juneau, Alaska 99801
Phone: 907-586-2093
Fax: 907-586-2099
www.pndengineers.com

DESIGN: MDS CHECKED: CRS
DRAWN: KLL APPROVED: CRS
SCALE: SCALE IN FEET 0 10 20 FT.

STATE OF ALASKA — 49TH — Charles R. Somerville CE-8845 — REGISTERED PROFESSIONAL ENGINEER
DATE: 5/23/2019

DOWNTOWN WATERFRONT IMPROVEMENTS PHASE I
CBJ CONTRACT NO. DH19-014

SHEET TITLE: **PILE CAP PLAN**

S3.05

PND PROJECT NO.: 182045 C.A.N. NO.: AECC250

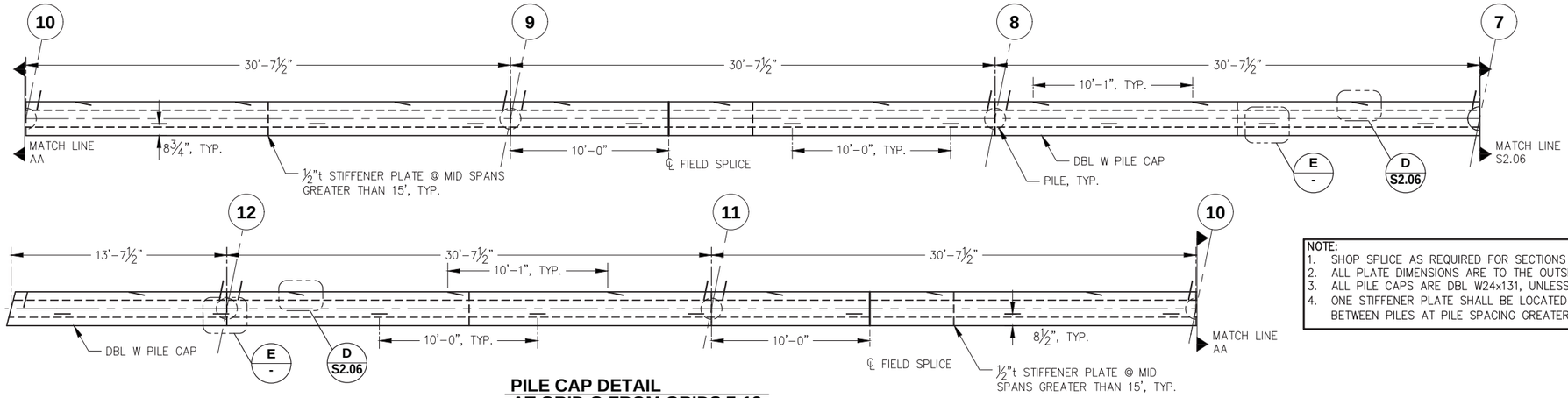

PILE CAP DETAIL
AT GRID G FROM GRIDS 7-12

NOTE:
1. SHOP SPLICE AS REQUIRED FOR SECTIONS TO FIT IN GALVANIZING TANKS.
2. ALL PLATE DIMENSIONS ARE TO THE OUTSIDE OF SIDE PLATE, UNLESS NOTED OTHERWISE
3. ALL PILE CAPS ARE DBL W24x131, UNLESS OTHERWISE NOTED
4. ONE STIFFENER PLATE SHALL BE LOCATED AT ℄ EACH PILE, AND ONE PLATE AT MIDSPAN BETWEEN PILES AT PILE SPACING GREATER THAN 15' O.C.

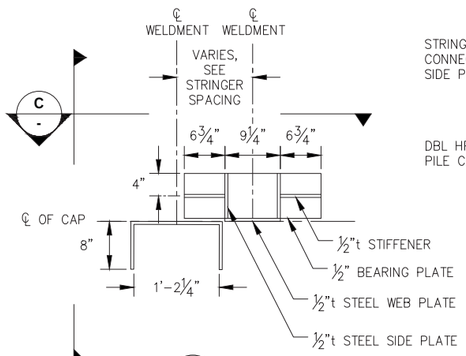

A - **GRID AA PLAN**

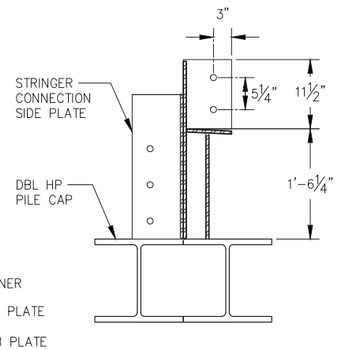

B - **GRID AA CAP SECTION**

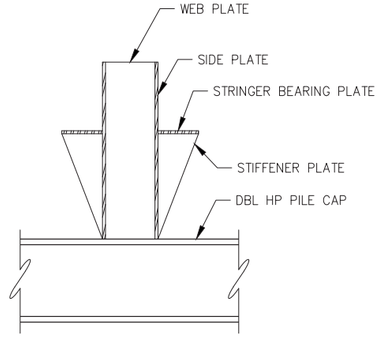

C - **GRID AA CAP ELEVATION**

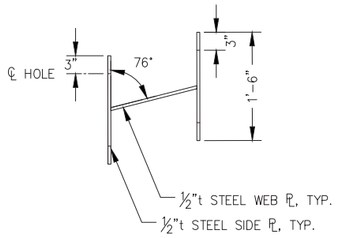

D - **STRINGER CONNECTION**

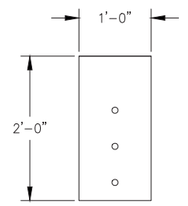

E - **BLOCKING CONNECTION PLATE**

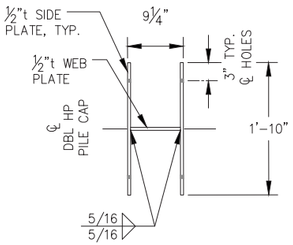

F - **STRINGER CONNECTION**

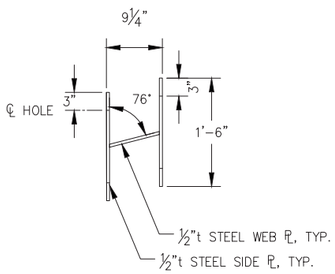

G - **STRINGER CONNECTION**

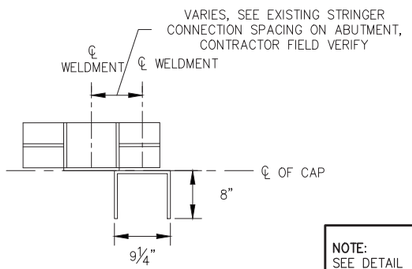

H - **STRINGER CONNECTION**

NOTE:
SEE DETAIL A - FOR DETAILS NOT CALLED OUT

REVISIONS

REV.	DATE	DESCRIPTION	DWN.	CKD.	APP.

PND ENGINEERS, INC.
9360 Glacier Highway Ste 100
Juneau, Alaska 99801
Phone: 907-586-2093
Fax: 907-586-2099
www.pndengineers.com

DESIGN: MDS CHECKED: CRS
DRAWN: KLL APPROVED: CRS
SCALE: SCALE IN FEET 0 10 20 FT.
DATE: 5/23/2019

STATE OF ALASKA 49TH Charles R. Somerville CE-8845 REGISTERED PROFESSIONAL ENGINEER

DOWNTOWN WATERFRONT IMPROVEMENTS PHASE I
CBJ CONTRACT NO. DH19-014

SHEET TITLE: **PILE CAP PLAN**

S3.06

PND PROJECT NO.: 182045 C.A.N. NO.: AECC250

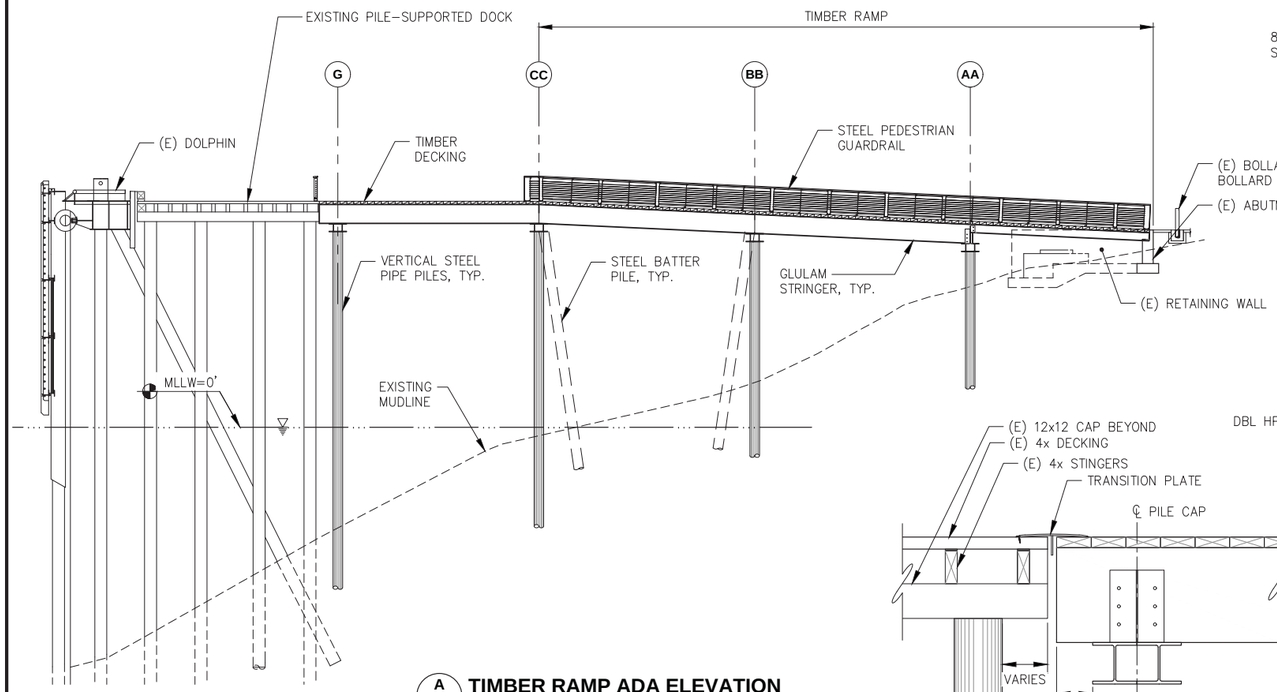

A S3.01 TIMBER RAMP ADA ELEVATION

B S3.03 DOCK SECTION AT RAMP AND SEAWALK, TYP.

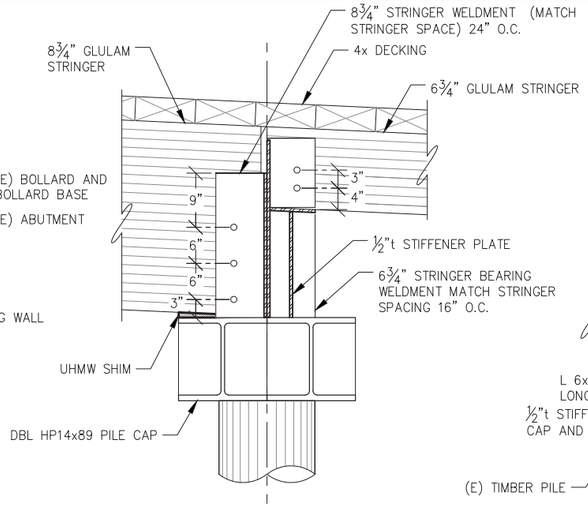

C - RAMP PILE CAP DETAIL AT STRINGER CHANGE

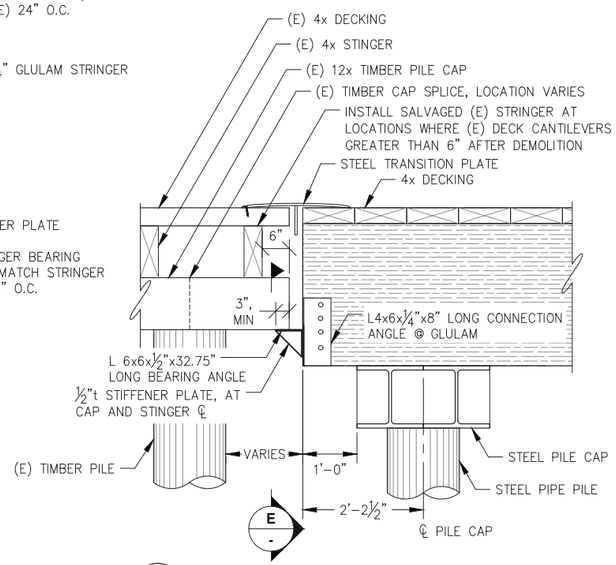

D S3.03 APPROACH DOCK CONNECTION TO EXISTING PILE CAP DETAIL
(3) REQUIRED, LOCATE AT EACH EXISTING PILE CAP.

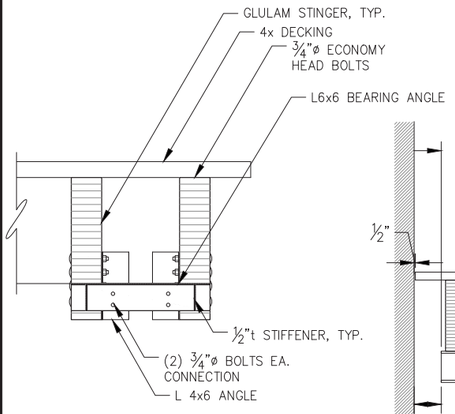

NOTE: LOCATE ANGLE FOR FULL BEARING OF EXITING PILE CAP ADJUST VERTICALLY AND HORIZONTALLY AS NEEDED.

E - APPROACH DOCK CONNECTION TO EXISTING DETAIL

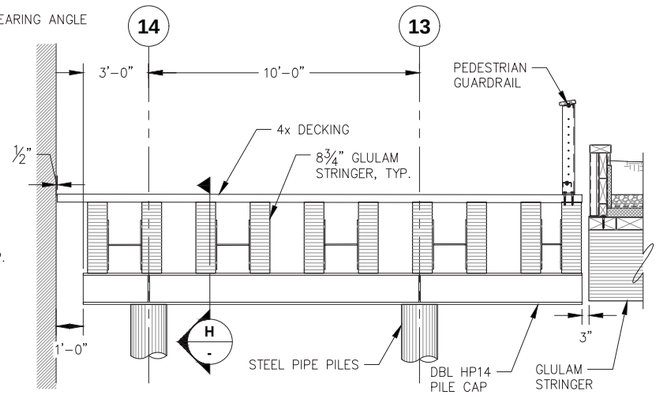

F S3.03 RAMP SECTION AT 8 3/4" GLULAM BEAM

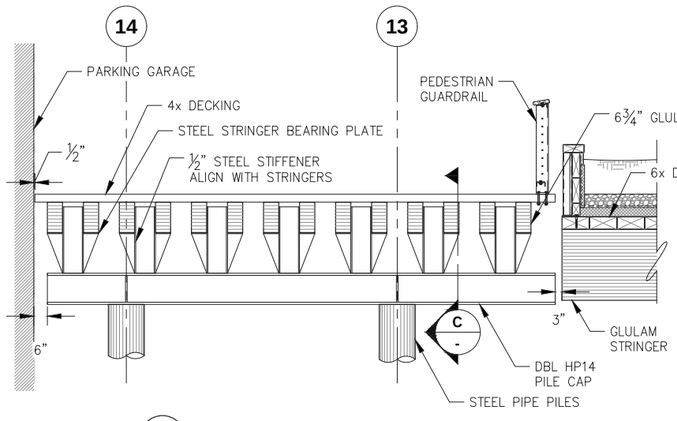

G S3.03 RAMP SECTION AT 6 3/4" GLULAM BEAM

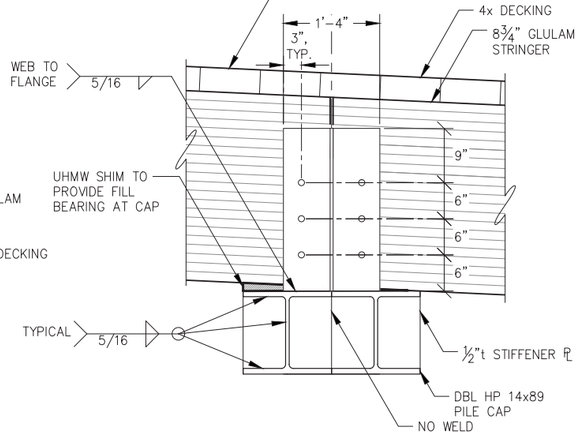

H S3.03 TYPICAL RAMP PILE CAP SECTION

REVISIONS

REV.	DATE	DESCRIPTION	DWN.	CKD.	APP.

P N D ENGINEERS, INC.
9360 Glacier Highway Ste 100
Juneau, Alaska 99801
Phone: 907-586-2093
Fax: 907-586-2099
www.pndengineers.com

DESIGN: MDS CHECKED: CRS
DRAWN: KLL APPROVED: CRS
SCALE: SCALE IN FEET 0 10 20 FT.

STATE OF ALASKA 49TH Charles R. Somerville CE-8845 REGISTERED PROFESSIONAL ENGINEER
DATE: 5/23/2019

DOWNTOWN WATERFRONT IMPROVEMENTS PHASE I
CBJ CONTRACT NO. DH19-014

SHEET TITLE: **ADA APPROACH RAMP ELEVATION AND SECTION**

PND PROJECT NO.: 182045 C.A.N. NO.: AECC250

S3.07

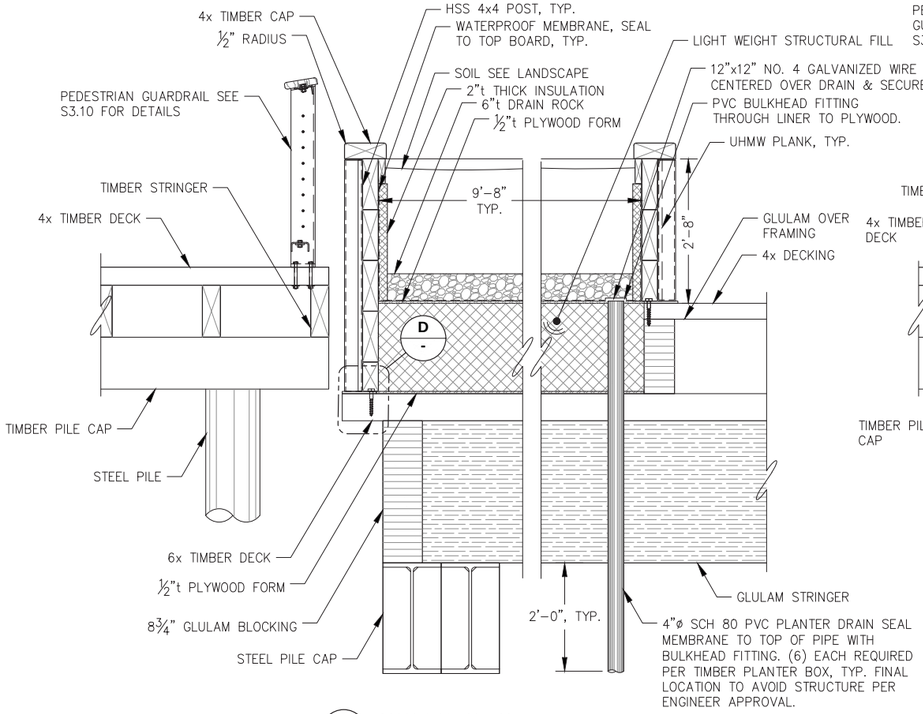

A S3.04 **DOCK SECTION AT WITH LIGHT WEIGHT FILL**

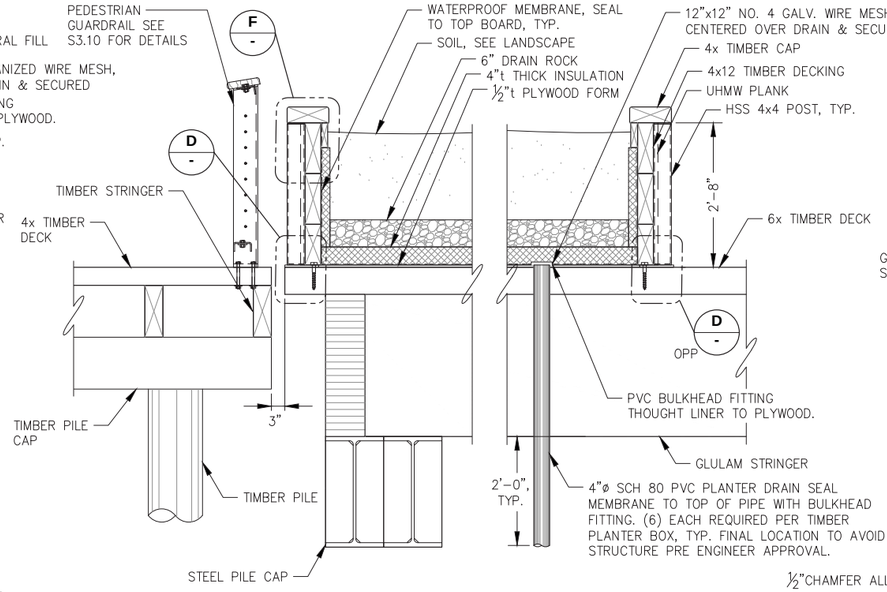

B S3.04 **DOCK SECTION AT SEA WALK RAMP**

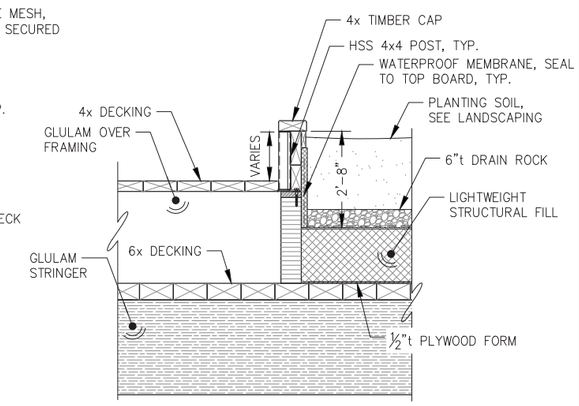

C S3.04 **PLANTER SECTION THROUGH OVER FRAMING**

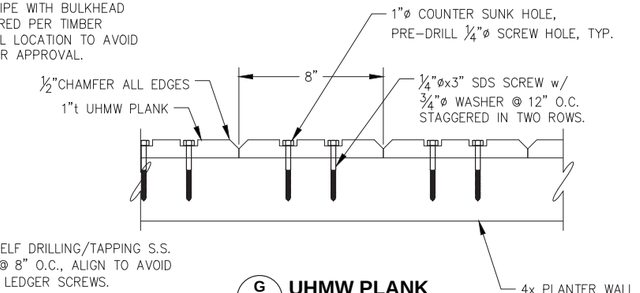

G - **UHMW PLANK SECTION**

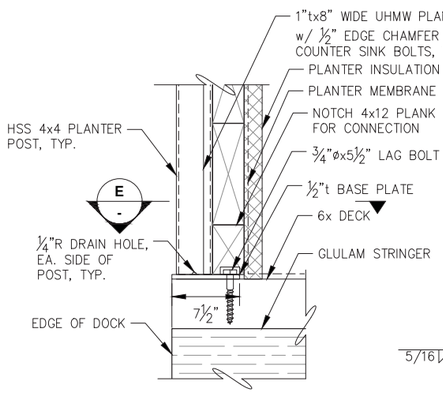

D - **PLANTER POST CONNECTION**

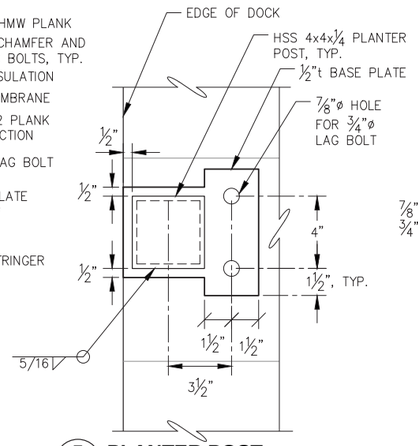

E - **PLANTER POST BASE PLATE DETAIL**

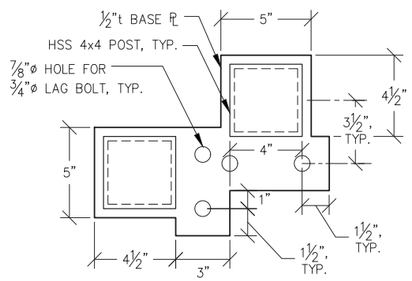

G - **PLANTER POST BASE PLATE AT CORNER**

NOTE: PLANTER WALL NOT SHOWN FOR CLARITY

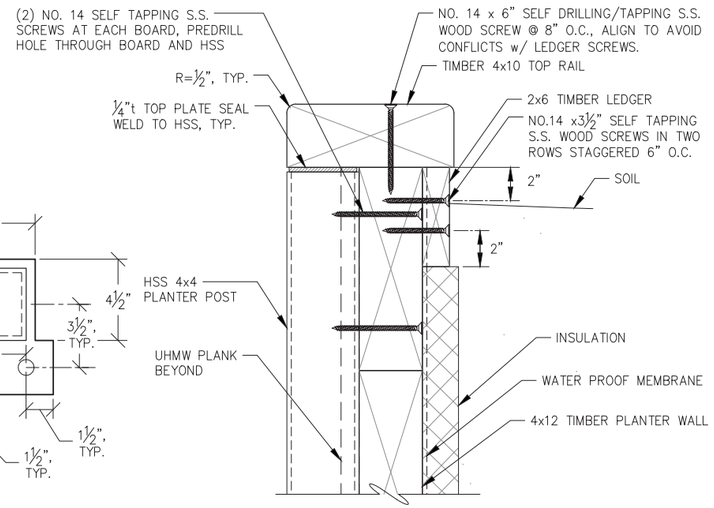

F - **TOP OF PLANTER WALL DETAIL**

REVISIONS

REV.	DATE	DESCRIPTION	DWN.	CKD.	APP.

PND ENGINEERS, INC.
9360 Glacier Highway Ste 100
Juneau, Alaska 99801
Phone: 907-586-2093
Fax: 907-586-2099
www.pndengineers.com

DESIGN: MDS CHECKED: CRS
DRAWN: KLL APPROVED: CRS
SCALE: NTS
DATE: 5/23/2019

STATE OF ALASKA 49 TH Charles R. Somerville CE-8845 REGISTERED PROFESSIONAL ENGINEER

DOWNTOWN WATERFRONT IMPROVEMENTS PHASE I
CBJ CONTRACT NO. DH19-014

SHEET TITLE: **TIMBER DECK SECTIONS AND DETAILS**

PND PROJECT NO.: 182045 C.A.N. NO.: AECC250

S3.08

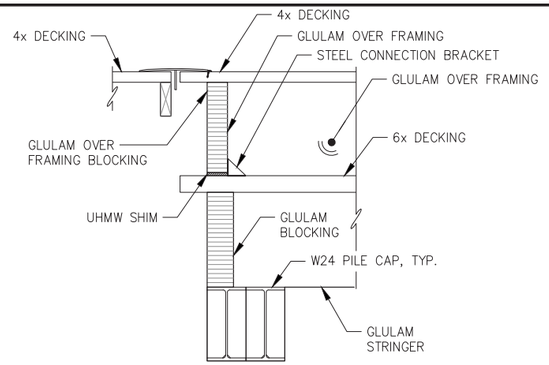

A S3.04 **OVER FRAMING SECTION AT SEAWALK**

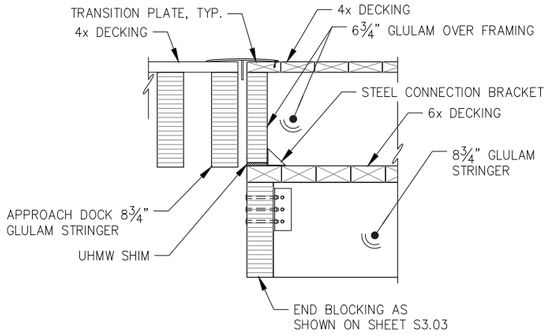

B S3.04 **OVERFRAMING SECTION AT APPROACH RAMP**

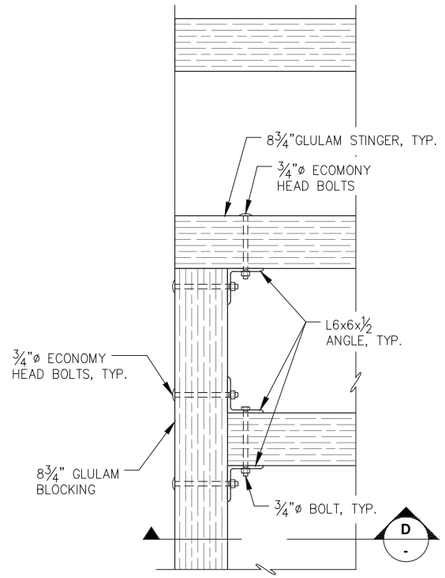

C S3.04 **EDGE BLOCKING CONNECTION SECTION**

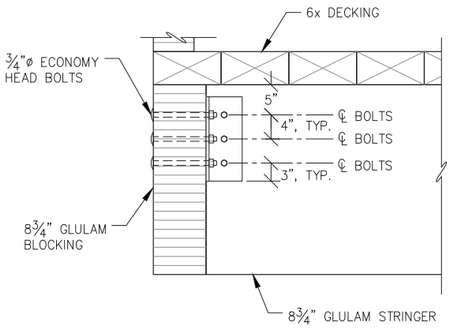

D - **EDGE BLOCKING CONNECTION PLAN**

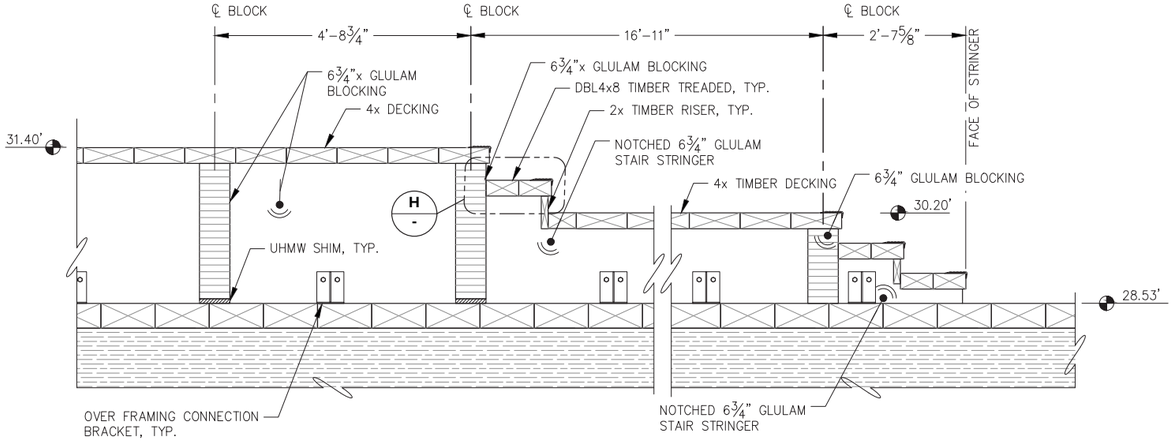

E S3.04 **OVERFRAMING STAIR SECTION**

NOTE:
1. NOTCH STRINGERS PRIOR TO PRESSURE TREATING TIMBER
2. PROVIDE UHMW SHIMS AS REQUIRED TO MATCH (E) DECK ELEVATIONS.

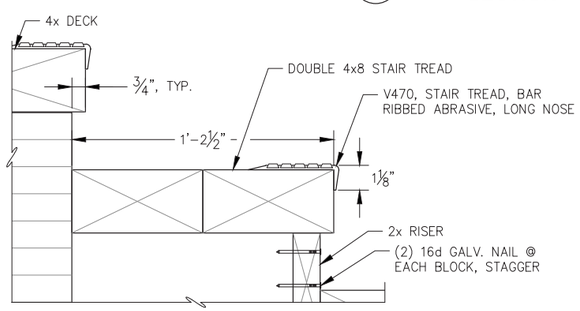

H - **STAIR NOSING DETAIL**

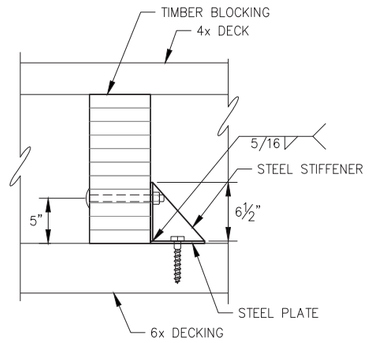

F - **TYPICAL OVER FRAMING CONNECTION SECTION**

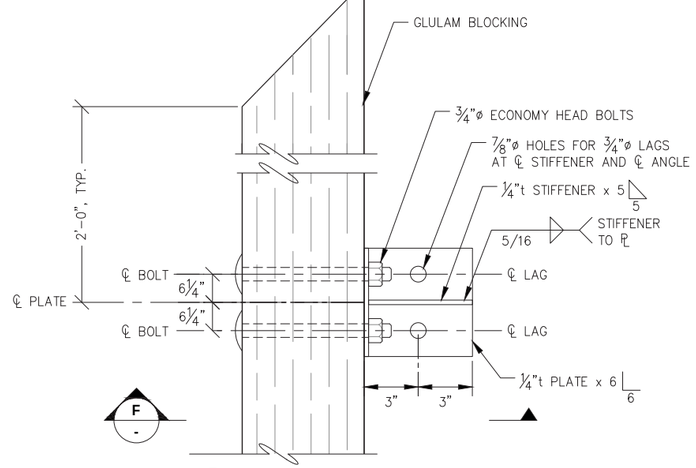

G S3.04 **TYPICAL OVER FRAMING CONNECTION PLAN**

REVISIONS

REV.	DATE	DESCRIPTION	DWN.	CKD.	APP.

CITY & BOROUGH OF JUNEAU DOCKS & HARBORS

PND ENGINEERS, INC.
9360 Glacier Highway Ste 100
Juneau, Alaska 99801
Phone: 907-586-2093
Fax: 907-586-2099
www.pndengineers.com

STATE OF ALASKA 49TH — Charles R. Somerville CE-8845 — REGISTERED PROFESSIONAL ENGINEER — DATE: 5/23/2019

DESIGN: MDS CHECKED: CRS
DRAWN: KLL APPROVED: CRS
SCALE: NTS

DOWNTOWN WATERFRONT IMPROVEMENTS PHASE I
CBJ CONTRACT NO. DH19-014

SHEET TITLE: **TIMBER OVER FRAMING DETAILS**

PND PROJECT NO.: 182045 C.A.N. NO.: AECC250

S3.09

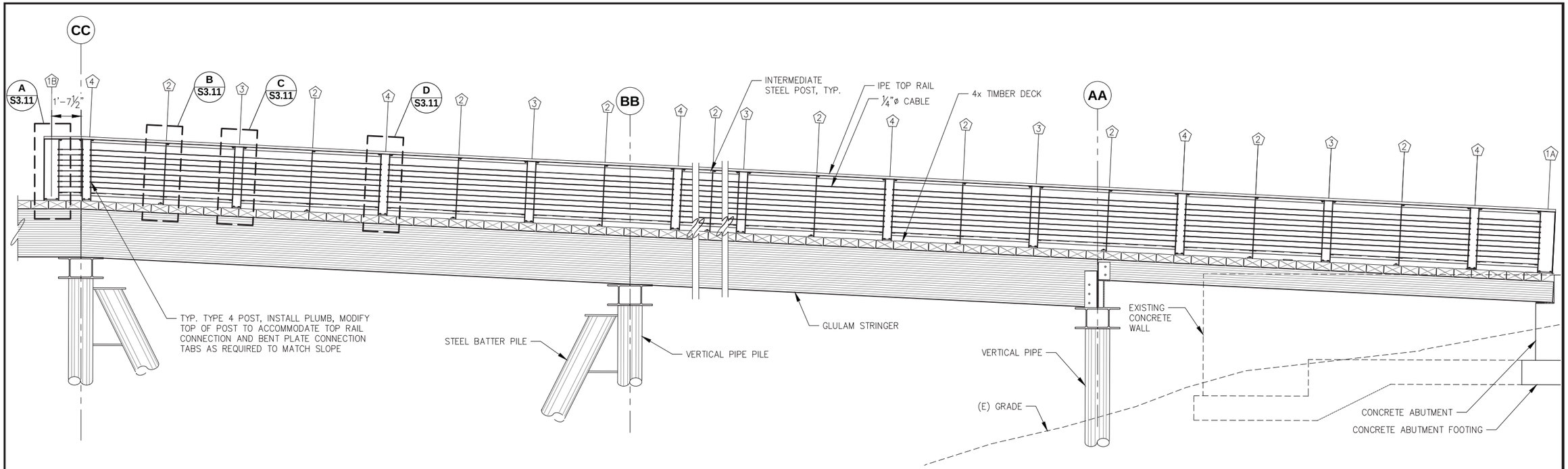

A S3.01 ADA APPROACH RAMP PEDESTRIAN GUARDRAIL ELEVATION

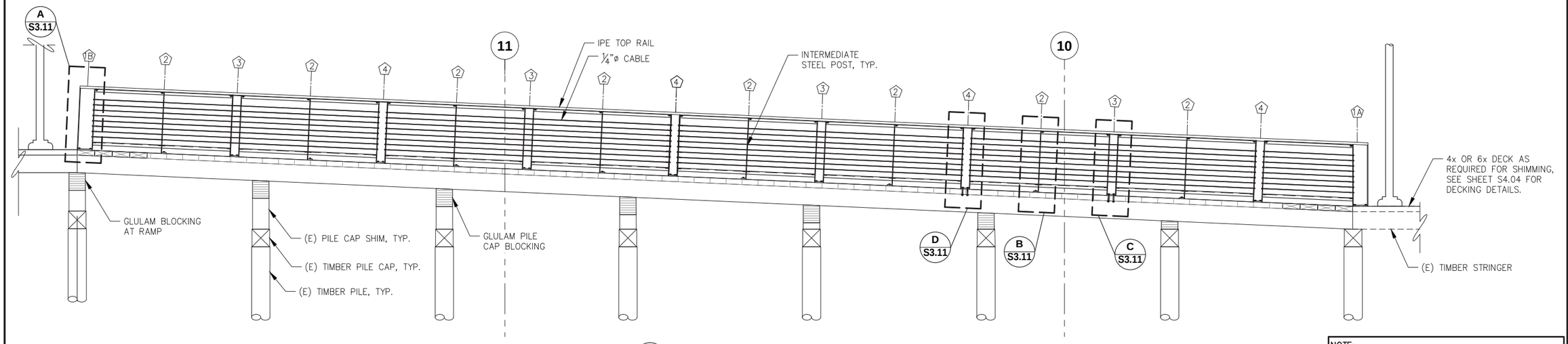

B S3.01 SEAWALK RAMP PEDESTRIAN GUARDRAIL ELEVATION

NOTE:
1. (#) INDICATES STEEL POST TYPE. SEE SHEET S3.11 FOR POST DETAILS

CITY & BOROUGH OF JUNEAU DOCKS & HARBORS

REVISIONS

REV.	DATE	DESCRIPTION	DWN.	CKD.	APP.

PND ENGINEERS, INC.
9360 Glacier Highway Ste 100
Juneau, Alaska 99801
Phone: 907-586-2093
Fax: 907-586-2099
www.pndengineers.com

DESIGN: MDS CHECKED: CRS
DRAWN: KLL APPROVED: CRS
SCALE: SCALE IN FEET 0 10 20 FT.

STATE OF ALASKA 49TH Charles R. Somerville CE-8845 REGISTERED PROFESSIONAL ENGINEER
DATE: 5/23/2019

DOWNTOWN WATERFRONT IMPROVEMENTS PHASE I
CBJ CONTRACT NO. DH19-014

SHEET TITLE: **PEDESTRIAN GUARDRAIL ELEVATION**

PND PROJECT NO.: 182045 C.A.N. NO.: AECC250

S3.10

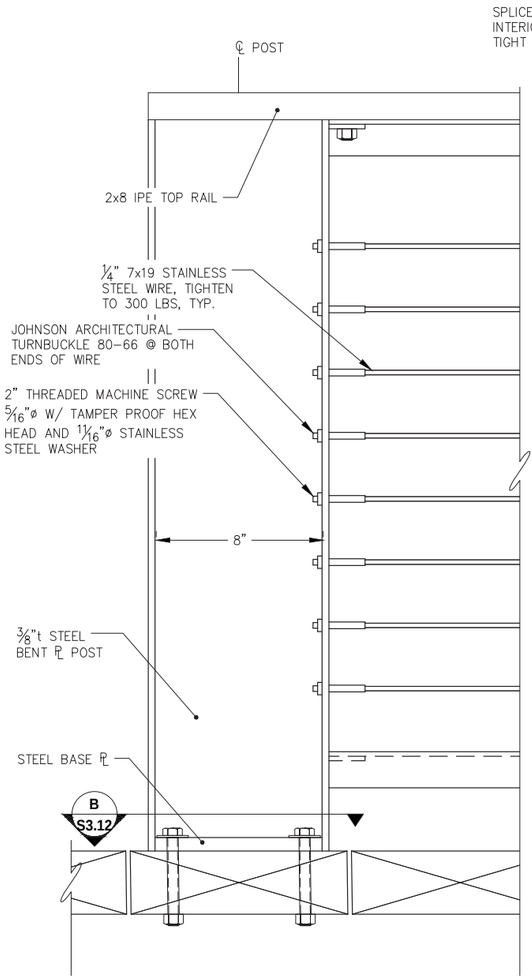

A - POST TYPE 1B 1A (OPP HAND) ELEVATION

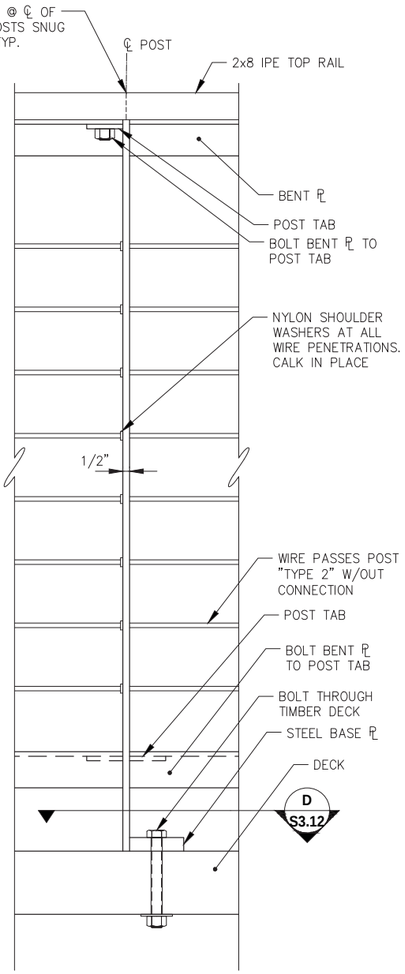

B - POST TYPE 2 ELEVATION

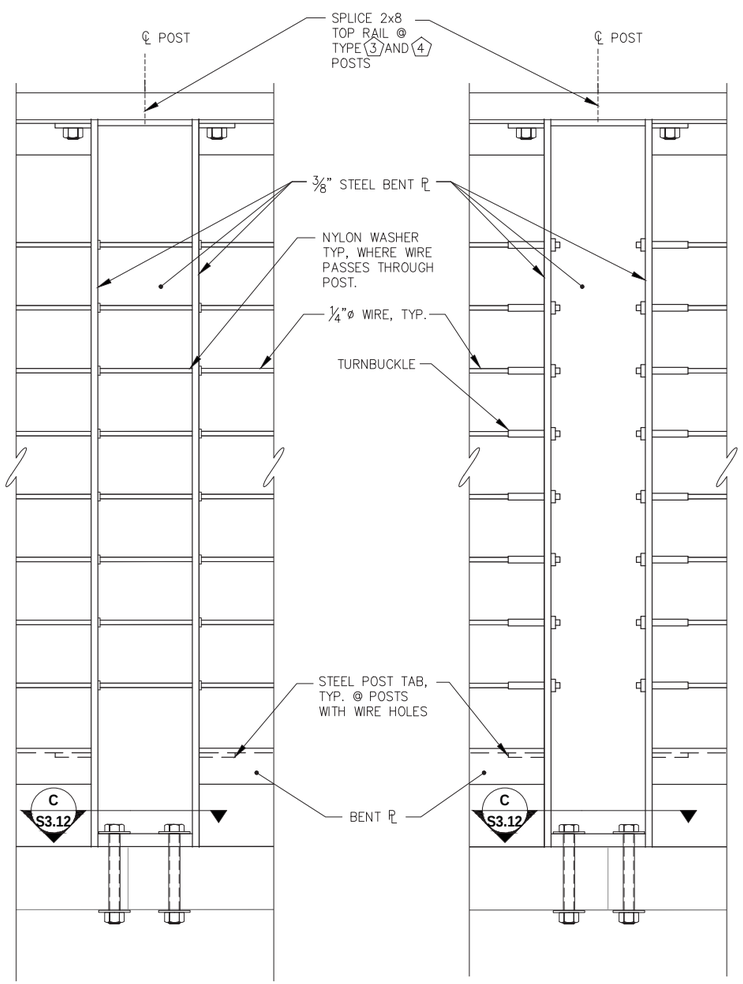

C - POST TYPE 3 ELEVATION

D - POST TYPE 4 ELEVATION

TYPE	TAB & HOLE LOCATIONS	NOTES
1A	RIGHT SIDE ONLY	CABLE PENETRATE RIGHT SIDE WITH TURNBUCKLES, SEE A/–
1B	LEFT SIDE ONLY	CABLE PENETRATE LEFT SIDE WITH TURNBUCKLES, SEE A/– SIM
2	BOTH SIDES	CABLE PENETRATE BOTH SIDE NO TURNBUCKLES, SEE DETAIL B/–
3	BOTH SIDES	CABLE PENETRATE BOTH SIDE NO TURNBUCKLES, SEE DETAIL C/–
4	BOTH SIDES	CABLE PENETRATE AND TURNBUCKLES BOTH SIDE, SEE DETAIL D/–

GUARD RAIL NOTES:

1. INSTALL POST PERPENDICULAR TO DECK, TOP RAIL, FOOTRAIL, AND CABLES TO FOLLOW DECK SLOPE.
2. HOT DIP GALVANIZE ENTIRE POST AND ALL METAL RAILING ASSEMBLIES AFTER FABRICATION. ALL WELDS TO BE GROUND SMOOTH AND ALL METAL EDGES DEBURRED AND LIGHTLY ROUNDED PRIOR TO GALVANIZING.
3. PROVIDE NYLON WASHERS AT ALL CABLE PENETRATIONS. CAULK SHOULDER WASHERS IN PLACE AT PENETRATIONS. PROVIDE NYLON SHOULDER WASHERS AND NYLON WASHERS UNDER TURNBUCKLE AND TERMINATION CONNECTIONS.
4. CUT TOP RAIL, BENT PLATES, AND WIRE TO FIT POST SPACING DETERMINED IN THE FIELD. FIELD TREAT ANY TIMBER FIELD CUT WITH AN APPROVED WOOD PRESERVATIVE TREATMENT. FIELD GALVANIZE ALL CUT OR FIELD WELDED MEMBERS WITH APPROVED GALVANIZING TECHNIQUE.
5. USE 3M 4200 FAST CURE MARINE SEALANT WHERE CAULKING IS CALLED FOR.
6. AT LOCATIONS WHERE EXISTING STRINGER BELOW DECKING PREVENTS THROUGH BOLTING, SUBSTITUTE ⅝"ø x 8" LAG BOLTS

CITY & BOROUGH OF JUNEAU DOCKS & HARBORS

REVISIONS

REV.	DATE	DESCRIPTION	DWN.	CKD.	APP.

PND ENGINEERS, INC.
9360 Glacier Highway Ste 100
Juneau, Alaska 99801
Phone: 907-586-2093
Fax: 907-586-2099
www.pndengineers.com

DESIGN: MDS CHECKED: CRS
DRAWN: KLL APPROVED: CRS
SCALE: SCALE IN FEET 0 10 20 FT.

STATE OF ALASKA 49TH Charles R. Somerville CE-8845 REGISTERED PROFESSIONAL ENGINEER
DATE: 5/23/2019

DOWNTOWN WATERFRONT IMPROVEMENTS PHASE I
CBJ CONTRACT NO. DH19-014

SHEET TITLE: **PEDESTRIAN GUARDRAIL DETAILS**

PND PROJECT NO.: 182045 C.A.N. NO.: AECC250

S3.11

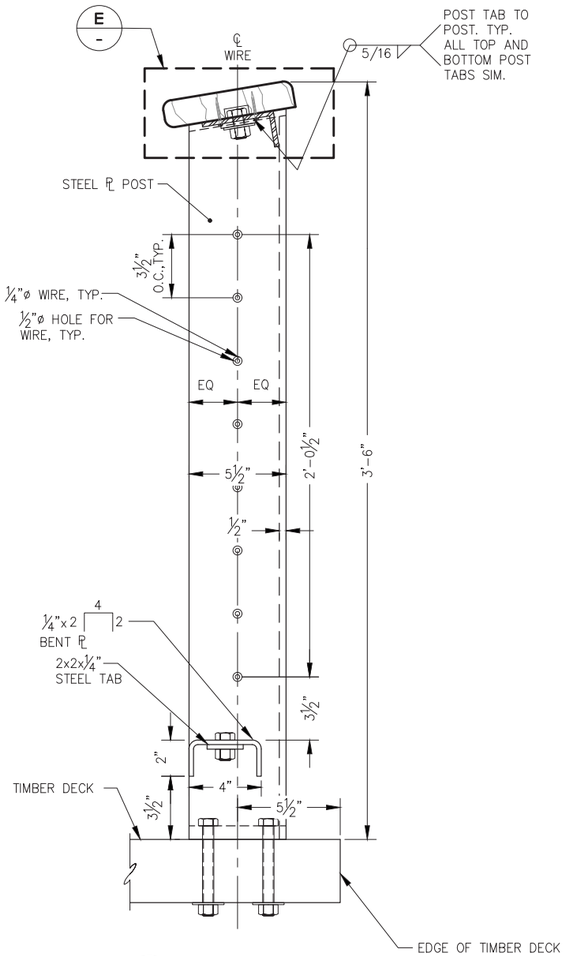

A **TYPICAL POST SECTION**

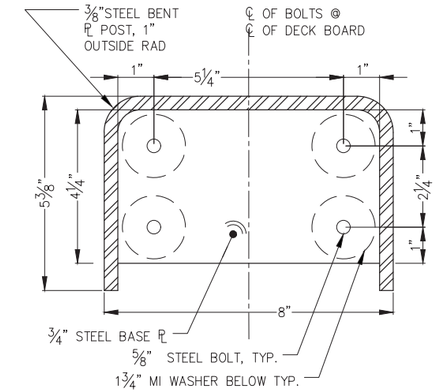

B **S3.11** **POST BASE PLATE TYPE** 1A & 1B

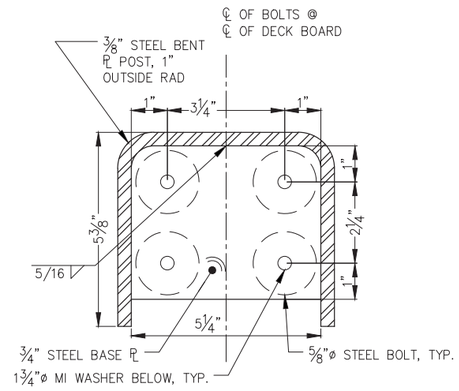

C **S3.11** **POST BASE PLATE TYPE** 3, 4, 5A & 5B

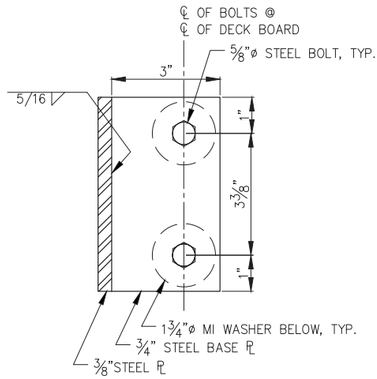

D **S3.11** **POST BASE PLATE TYPE** 2

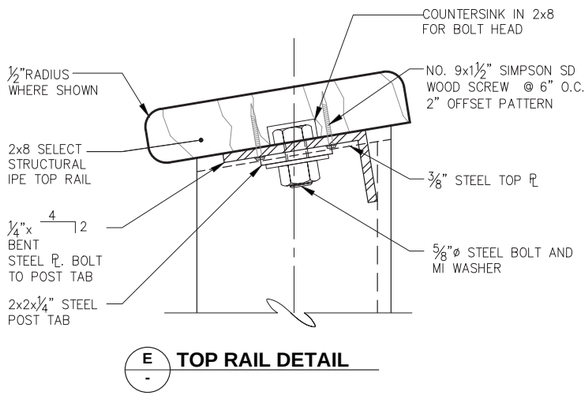

E **-** **TOP RAIL DETAIL**

REVISIONS

REV.	DATE	DESCRIPTION	DWN.	CKD.	APP.

P N D ENGINEERS, INC.
9360 Glacier Highway Ste 100
Juneau, Alaska 99801
Phone: 907-586-2093
Fax: 907-586-2099
www.pndengineers.com

DESIGN: MDS CHECKED: CRS
DRAWN: KLL APPROVED: CRS
SCALE: SCALE IN FEET 0 10 20 FT.
DATE: 5/23/2019

STATE OF ALASKA 49TH Charles R. Somerville CE-8845 REGISTERED PROFESSIONAL ENGINEER

DOWNTOWN WATERFRONT IMPROVEMENTS PHASE I
CBJ CONTRACT NO. DH19-014

SHEET TITLE:
PEDESTRIAN GUARDRAIL SECTION AND DETAILS

PND PROJECT NO.: 182045 C.A.N. NO.: AECC250

S3.12

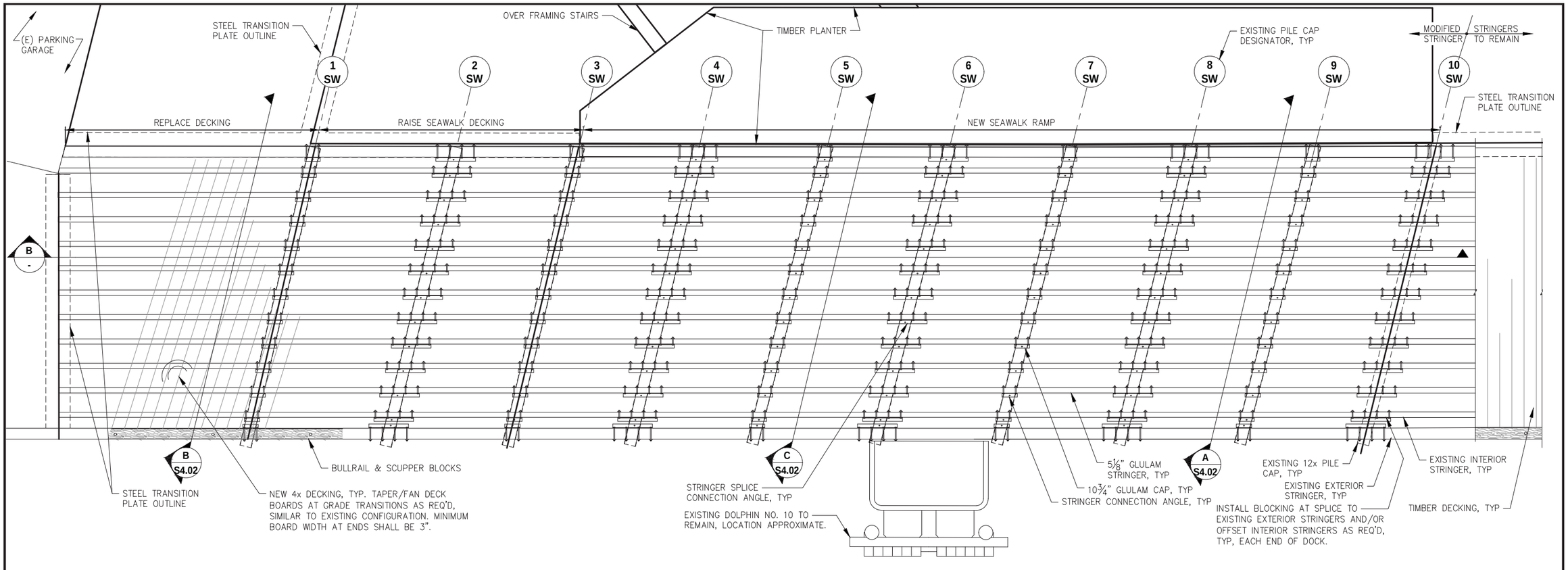

A S3.01 **DOCK MODIFICATIONS PLAN**

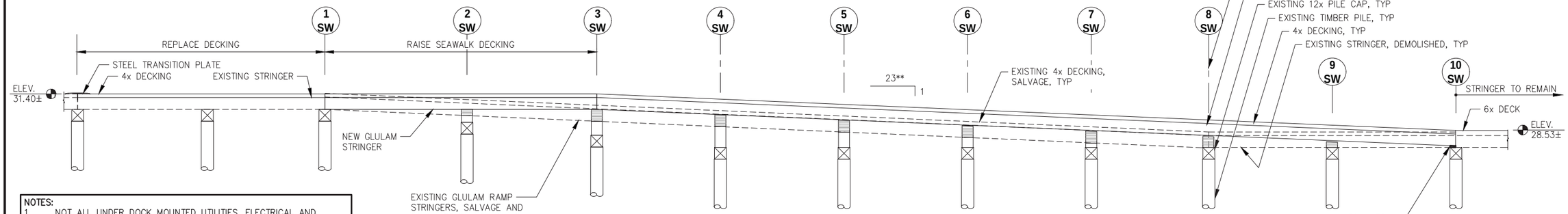

B - **DOCK MODIFICATIONS PROFILE**

**APPROXIMATE SLOPE
NOTE: NOT ALL REQUIRED COMPONENTS SHOWN THIS VIEW.

NOTES:
1. NOT ALL UNDER DOCK MOUNTED UTILITIES, ELECTRICAL AND APPURTENANCES SHOWN. FIELD CONFIRM ACTUAL SITE CONDITIONS.
2. DOCK ELEVATION APPROXIMATE VERIFY IN FIELD.
3. **APPROXIMATE SLOPE
4. NOT ALL REQUIRED COMPONENTS SHOWN THIS VIEW.

CITY & BOROUGH OF JUNEAU DOCKS & HARBORS

REVISIONS

REV.	DATE	DESCRIPTION	DWN.	CKD.	APP.

PND ENGINEERS, INC.
9360 Glacier Highway Ste 100
Juneau, Alaska 99801
Phone: 907-586-2093
Fax: 907-586-2099
www.pndengineers.com

DESIGN: BMI CHECKED: CRS
DRAWN: BMI APPROVED: CRS
SCALE: NTS

STATE OF ALASKA 49TH Charles R. Somerville CE-8845 REGISTERED PROFESSIONAL ENGINEER
DATE: 5/23/2019

DOWNTOWN WATERFRONT IMPROVEMENTS PHASE I
CBJ CONTRACT NO. DH19-014

SHEET TITLE: **SEAWALK MODIFICATIONS PLAN / ELEVATION**

PND PROJECT NO.: 182045 C.A.N. NO.: AECC250

S4.01

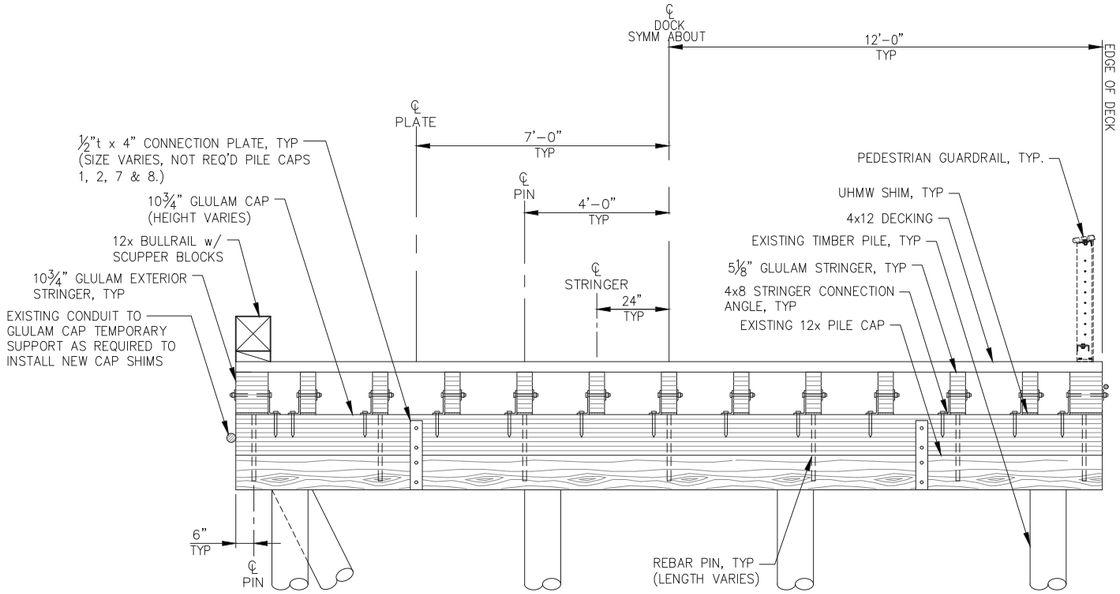

A S4.01 TYPICAL RAMP SHIM SECTION AT LOCATIONS WITH OUT EXISTING SHIMS

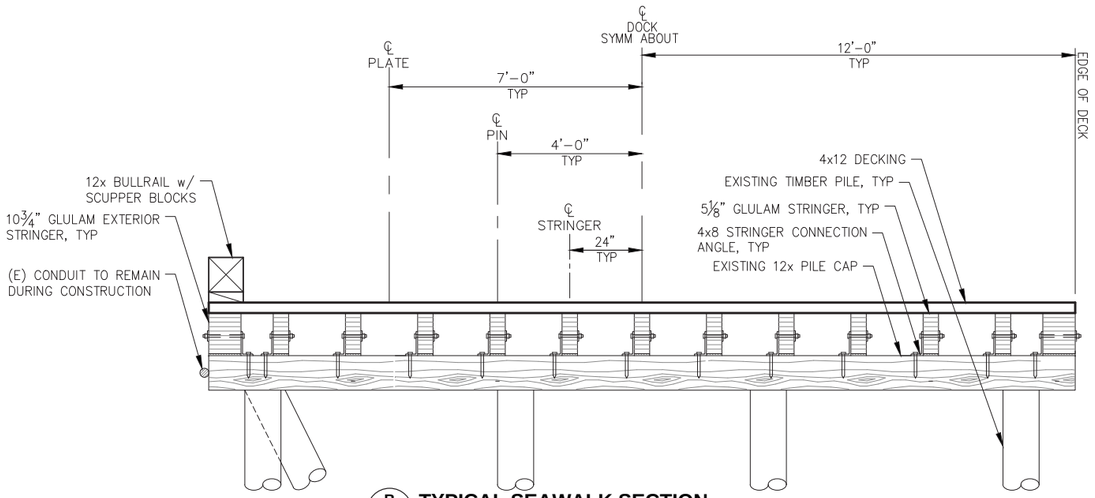

B - TYPICAL SEAWALK SECTION WITH NEW DECK

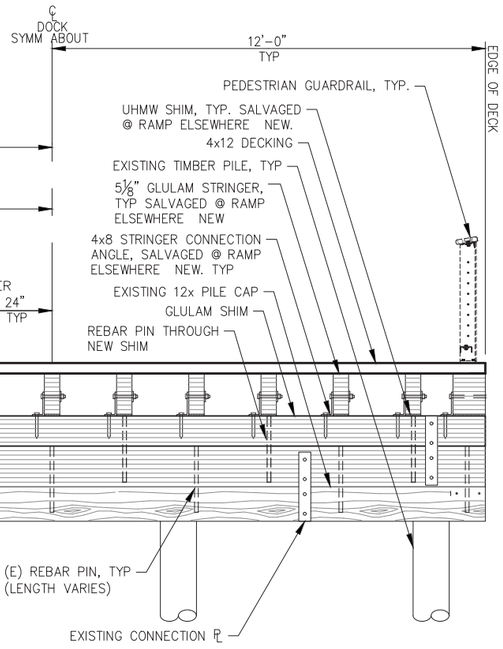

C S4.01 TYPICAL RAMP SHIM SECTION AT LOCATIONS WITH EXISTING SHIMS

CITY & BOROUGH OF JUNEAU — DOCKS & HARBORS

REVISIONS

REV.	DATE	DESCRIPTION	DWN.	CKD.	APP.

PND ENGINEERS, INC.
9360 Glacier Highway Ste 100
Juneau, Alaska 99801
Phone: 907-586-2093
Fax: 907-586-2099
www.pndengineers.com

DESIGN: BMI CHECKED: CRS
DRAWN: BMI APPROVED: CRS
SCALE: NTS
DATE: 5/23/2019

STATE OF ALASKA 49TH — Charles R. Somerville CE-8845 — REGISTERED PROFESSIONAL ENGINEER

DOWNTOWN WATERFRONT IMPROVEMENTS PHASE I
CBJ CONTRACT NO. DH19-014

SHEET TITLE: **SEAWALK MODIFICATIONS SECTIONS**

S4.02

PND PROJECT NO.: 182045 C.A.N. NO.: AECC250

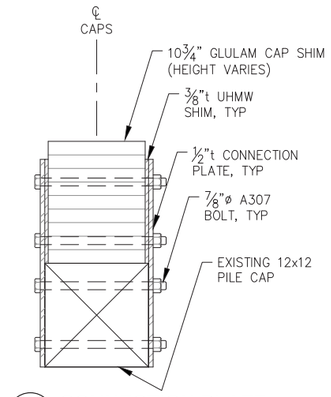

A - CONNECTION PLATE TYPICAL SECTION

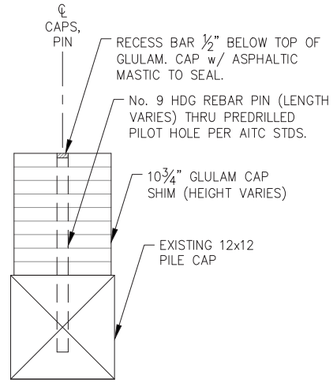

B - REBAR PIN TYPICAL SECTION AT UNSHIMED EXISTING PILE CAP

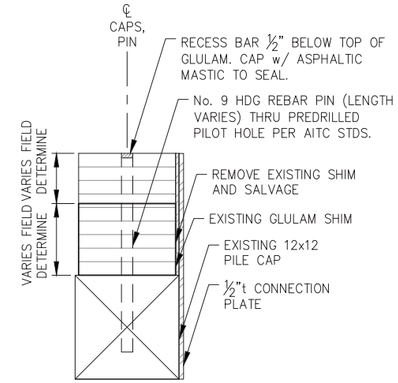

C - REBAR PIN TYPICAL SECTION AT SHIMED EXISTING PILE CAP

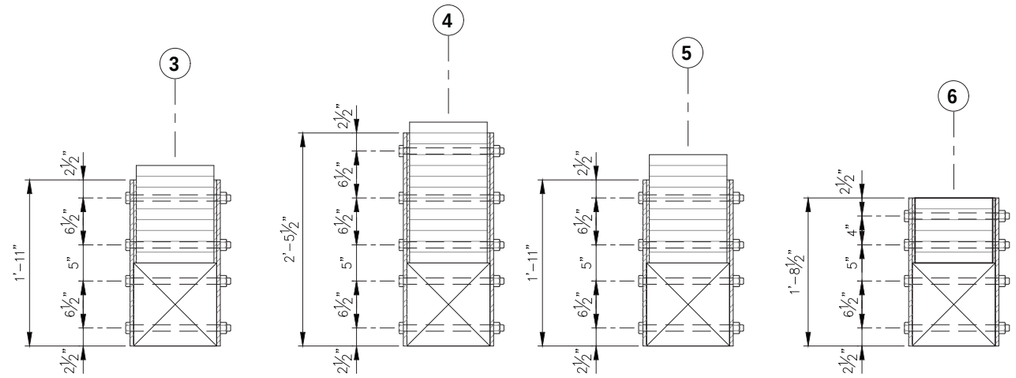

G - VARIOUS EXISTING PILE CAP CONNECTION PLATES TYPICAL SECTION

NOTE:
DETAILS NOT SHOWN SIMILAR TO TYPICAL SECTION A.

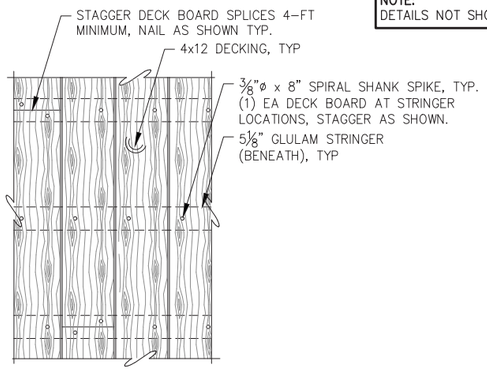

DECK NAILING - PLAN

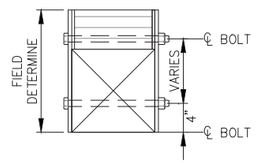

H - CAP CONNECTION PLATE SHIMS LESS THAN 9" DEEP

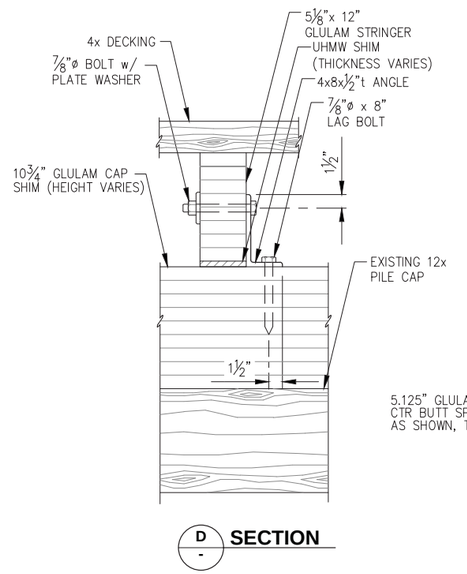

D - SECTION

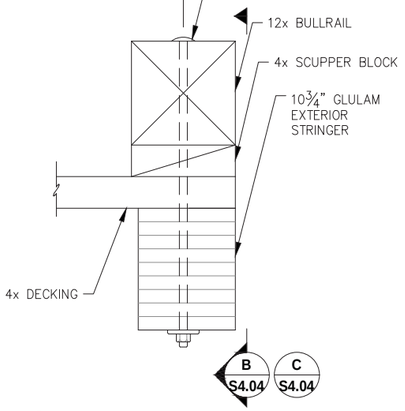

I - BULLRAIL - TYPICAL SECTION

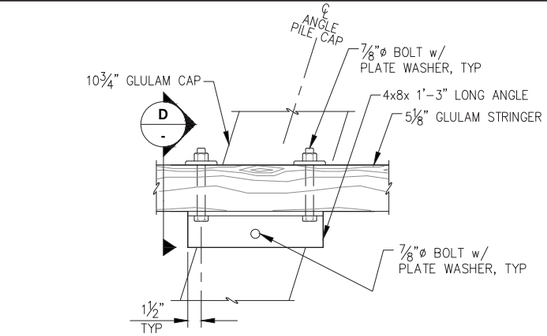

E - STRINGER CONNECTION - PLAN

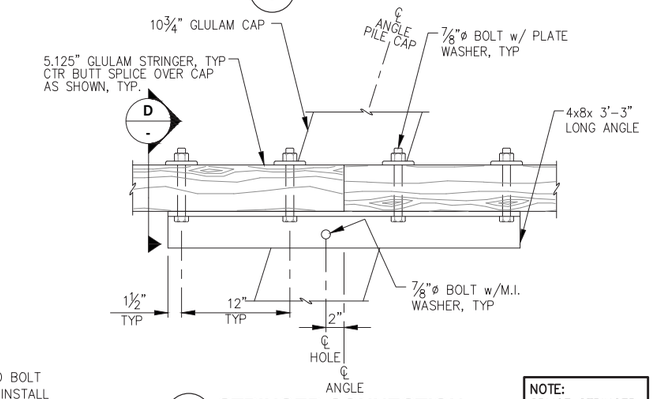

F - STRINGER CONNECTION PLAN AT SPLICE

NOTE:
SPLICE STRINGER AS REQUIRED.

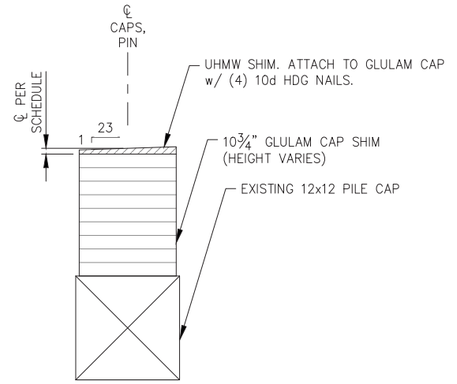

J - UHMW SHIM - TYPICAL SECTION

NOTE:
PROVIDE ADDITIONAL ASPHALT SHINGLES FOR SHIMMING AS REQ'D.

REVISIONS

REV.	DATE	DESCRIPTION	DWN.	CKD.	APP.

PND ENGINEERS, INC.
9360 Glacier Highway Ste 100
Juneau, Alaska 99801
Phone: 907-586-2093
Fax: 907-586-2099
www.pndengineers.com

DESIGN: BMI CHECKED: CRS
DRAWN: BMI APPROVED: CRS
SCALE: NTS
DATE: 5/23/2019

STATE OF ALASKA 49TH Charles R. Somerville CE-8845 REGISTERED PROFESSIONAL ENGINEER

DOWNTOWN WATERFRONT IMPROVEMENTS PHASE I
CBJ CONTRACT NO. DH19-014

SHEET TITLE: **SEAWALK MODIFICATION DETAILS**

S4.03

PND PROJECT NO.: 182045 C.A.N. NO.: AECC250

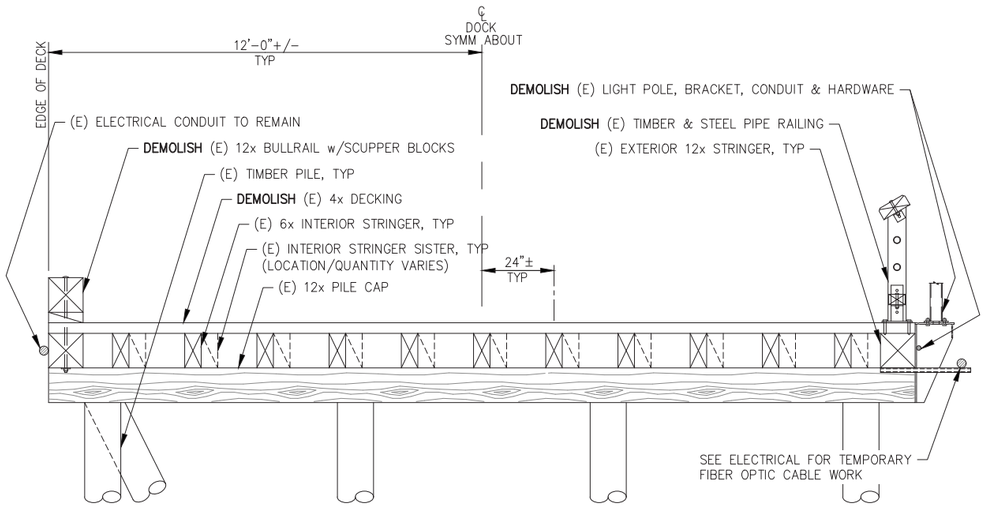

A / - **TYPICAL EXISTING DOCK SECTION**
NOTE: ALL EXISTING DOCK ITEMS TO REMAIN UNLESS OTHERWISE NOTED.

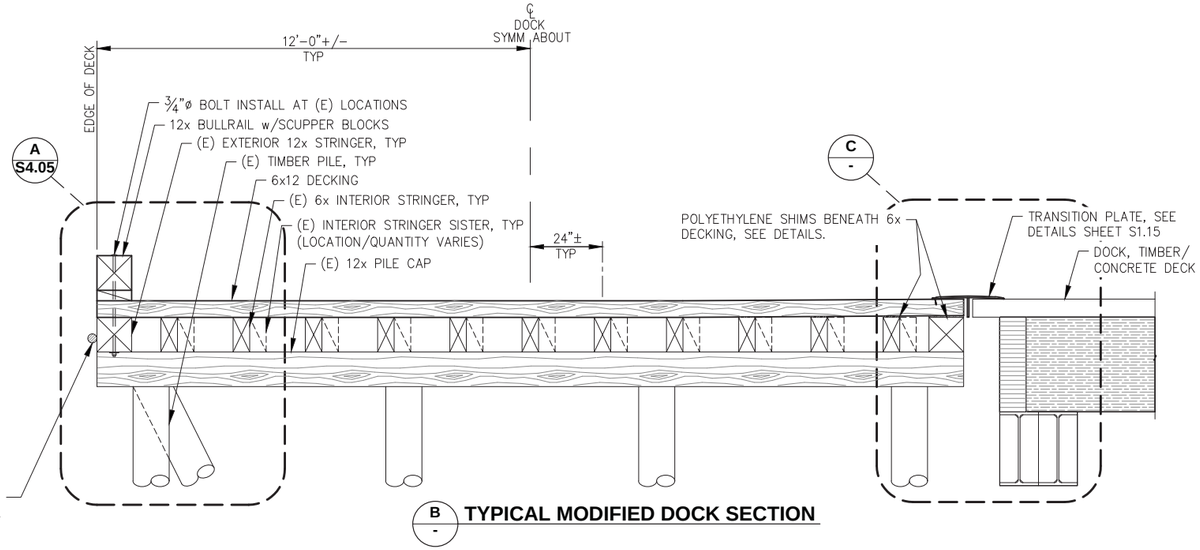

B / - **TYPICAL MODIFIED DOCK SECTION**

DOCK MODIFICATIONS SCOPE OF IMPROVEMENTS:
- REMOVE AND DISPOSE EXISTING DECKING, BULLRAIL, LIGHT POLES, BRACKETS & CONDUIT AND ASSOCIATED HARDWARE IN THEIR ENTIRETY.
- INSTALL NEW SHIMS, DECKING AND BULLRAIL AS SHOWN.
- CONTRACTOR SHALL VERIFY ALL FINAL ELEMENTS/MEASUREMENTS NOT SPECIFICALLY SHOWN AS REQUIRED TO PERFORM THE WORK.

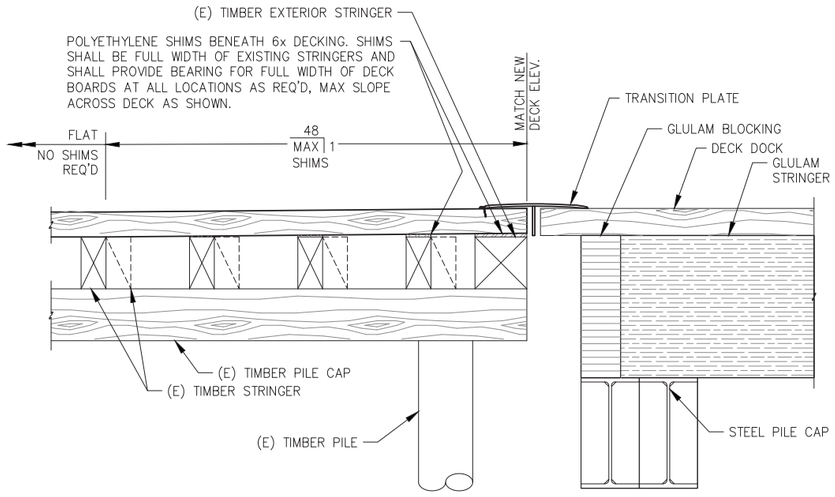

C / - **TYPICAL MODIFIED DOCK SECTION EAST SIDE SHIM DETAILS**

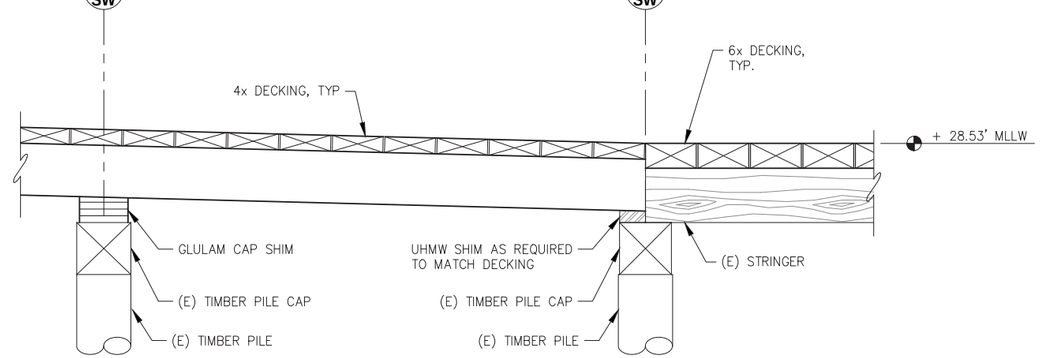

D / - **MODIFIED DOCK TRANSITION - PROFILE @ RAMP**

NOTE:
1. ELEVATION DIFFERENCE BETWEEN TOP OF EXISTING DECK AND TOP OF THE NEW DOCK (28.53') VARIES FROM 0" TO 3". CONTRACTOR SHALL CONFIRM QUANTITY, THICKNESS AND SLOPE OF SHIMS REQUIRED TO MEET THE MAX SLOPE AND TRANSITION REQUIREMENTS BETWEEN VARIOUS DECK SURFACES ON ALL SIDES.
2. IN LEIU OF SHIMS SOME PLANING OF BOTTOM SIDE OF NEW 6x DECK BOARDS MAY BE REQUIRED TO MATCH TOP TO NEW/ADJACENT DOCKS.

DEMOLISH = REMOVE & DISPOSE AT CONTRACTOR PROVIDED DISPOSAL SITE.

SALVAGE = REMOVE, SAVE & SUITABLY STORE AT OWNER DESIGNATED LOCATION OR RELOCATE AS SHOWN ON PLANS. OWNER'S DESIGNATED STORAGE LOCATION SHALL BE WITHIN 5 MILES OF PROJECT SITE. CONTRACTOR SHALL BE RESPONSIBLE FOR ALL TRANSPORTING, LOADING, UNLOADING AND GENERAL HANDLING OF SALVAGED MATERIALS. STORAGE OF SALVAGED MATERIALS SHALL BE COORDINATED WITH THE OWNER AT ALL TIMES. SPECIFIC LOCATIONS FOR MATERIALS TO BE SALVAGED AND STORED SHALL BE DICTATED BY THE OWNER AND SHALL BE AT THE OWNER'S SOLE DISCRETION. THE CONTRACTOR SHALL BE RESPONSIBLE FOR ANY DAMAGE INCURRED DUE TO HIS ACTIVITIES. DAMAGED MATERIALS SHALL BE REPAIRED OR REPLACED AT NO COST TO THE OWNER.

CITY & BOROUGH OF JUNEAU — DOCKS & HARBORS

REVISIONS

REV.	DATE	DESCRIPTION	DWN.	CKD.	APP.

PND ENGINEERS, INC.
9360 Glacier Highway Ste 100
Juneau, Alaska 99801
Phone: 907-586-2093
Fax: 907-586-2099
www.pndengineers.com

DESIGN: BMI CHECKED: CRS
DRAWN: BMI APPROVED: CRS
SCALE: NTS
DATE: 5/29/2019

STATE OF ALASKA 49TH — Charles R. Somerville CE-8845 — REGISTERED PROFESSIONAL ENGINEER

DOWNTOWN WATERFRONT IMPROVEMENTS PHASE I
CBJ CONTRACT NO. DH19-014

SHEET TITLE: **SEAWALK DECK MODIFICATION DETAILS**

PND PROJECT NO.: 182045 C.A.N. NO.: AECC250

S4.04

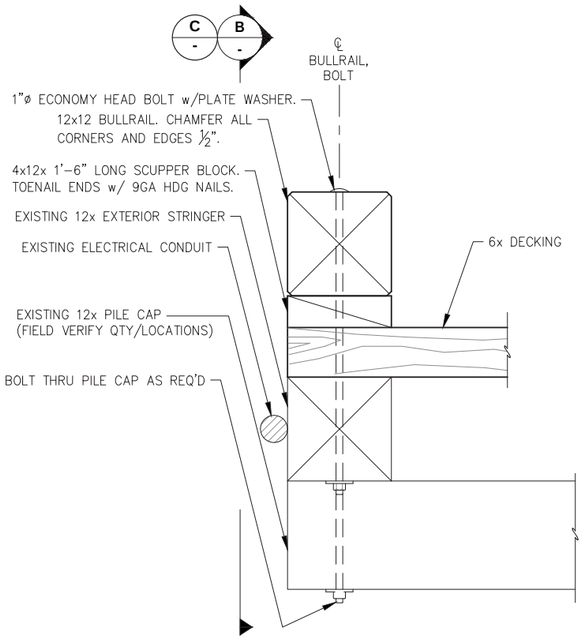

A - BULLRAIL - TYPICAL SECTION

NOTE:
- SCUPPER BLOCK AND CONNECTION BOLT SPACING 8'–0" O.C. MAX.
- PROVIDE BOLT LENGTH AS REQ'D IN LOCATIONS WHERE EXISTING PILE CAPS FALL BENEATH EXTERIOR STRINGER AND BOLT/SPLICE LOCATION.

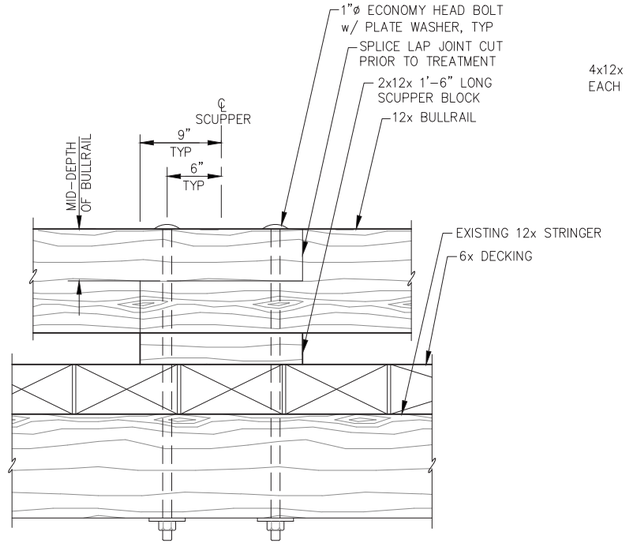

B - TYPICAL BULLRAIL SPLICE ELEVATION

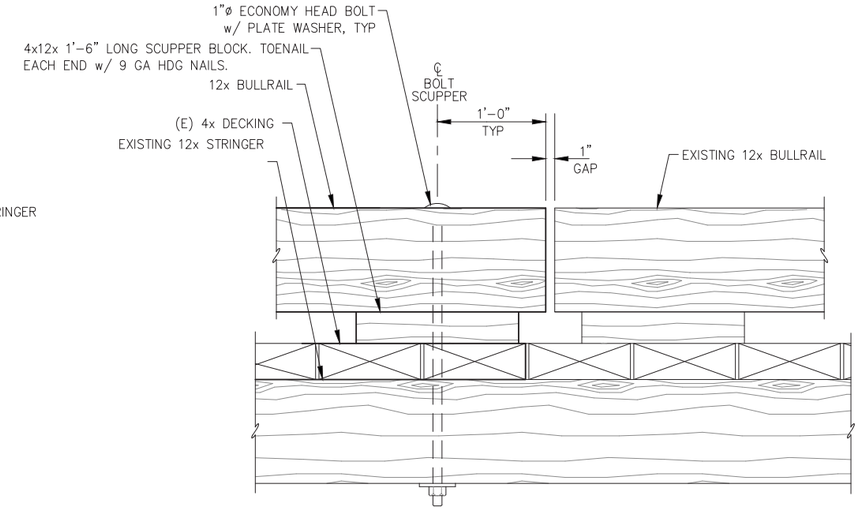

C - TYPICAL BULLRAIL END ELEVATION

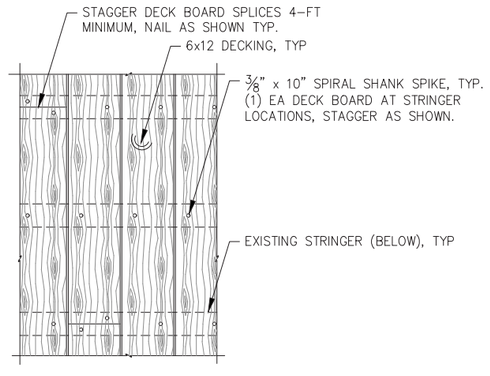

D - DECK NAILING PLAN

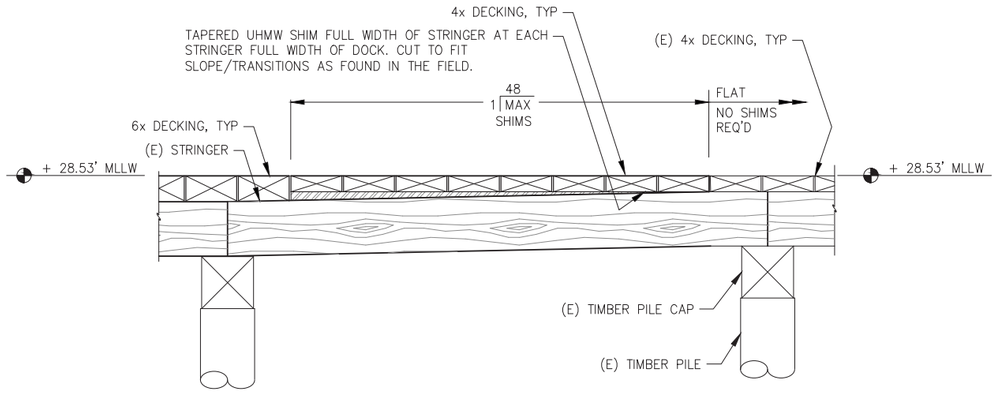

E - MODIFIED DOCK TRANSITION - PROFILE @ RAMP

NOTE: EXISTING DECK ELEVATIONS VARY, DETAIL SHOWS APPROXIMATE CONDITIONS. FIELD VERIFY EXISTING CONDITIONS.

CITY & BOROUGH OF JUNEAU — DOCKS & HARBORS

REVISIONS

REV.	DATE	DESCRIPTION	DWN.	CKD.	APP.

PND ENGINEERS, INC.
9360 Glacier Highway Ste 100
Juneau, Alaska 99801
Phone: 907-586-2093
Fax: 907-586-2099
www.pndengineers.com

DESIGN: BMI CHECKED: CRS
DRAWN: BMI APPROVED: CRS
SCALE: NTS
DATE: 5/23/2019

STATE OF ALASKA — 49TH — Charles R. Somerville — CE-8845 — REGISTERED PROFESSIONAL ENGINEER

DOWNTOWN WATERFRONT IMPROVEMENTS PHASE I
CBJ CONTRACT NO. DH19-014

SHEET TITLE: **SEAWALK DECK MODIFICATION DETAILS**

S4.05

PND PROJECT NO.: 182045 C.A.N. NO.: AECC250

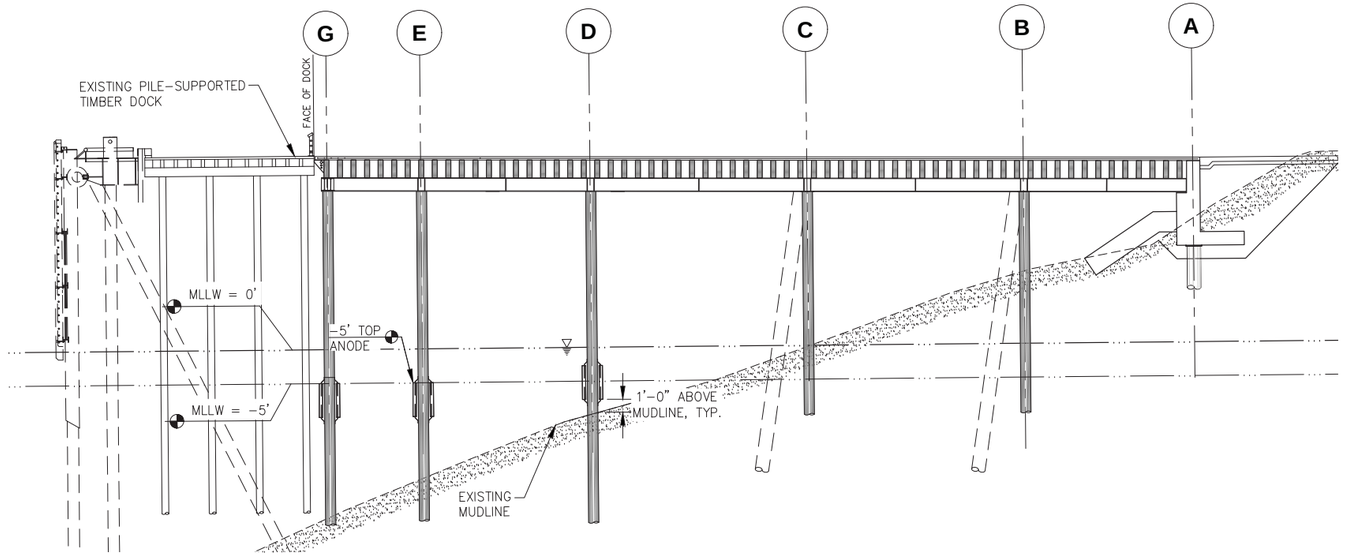

A / - PILE ANODE DOCK SECTION

NOTE: ANODE INSTALLATION ALONG GRID 5 SHOWN OTHER GRIDS SIMILAR

NOTE: ANODES SHALL BE INSTALLED ON ALL PILES WITH EXPOSED PILE BELOW A -5 MLLW ELEVATION. ANODES SHALL BE A MINIMUM OF 1'-0" FROM MUDLINE AND SHALL BE SPACED A MAXIMUM OF 20' WHEN PILE LENGTH ABOVE MUDLINE ALLOWS.

PILE ANODE SCHEDULE SUMMARY TABLE

LOCATION		DIAMETER (INCH)	WALL THICKNESS (INCH)	ANODE DIMENSION (INCH)	ANODE WEIGHT (LBS)	QUANTITY
1D	VERTICAL	18"	0.500	4x4x72	115	2
1E	VERTICAL	18"	0.500	4x4x72	115	2
1G	VERTICAL	18"	0.500	4x4x72	115	2
2D	VERTICAL	18"	0.500	4x4x72	115	2
2D.5	VERTICAL	18"	0.500	4x4x72	115	2
2G	VERTICAL	18"	0.500	4x4x72	115	2
3D	VERTICAL	18"	0.500	4x4x72	115	2
3D.5	VERTICAL	18"	0.500	4x4x72	115	2
3G	VERTICAL	18"	0.500	4x4x72	115	2
4D	VERTICAL	18"	0.500	4x4x72	115	2
4E	VERTICAL	18"	0.500	4x4x72	115	2
4G	VERTICAL	18"	0.500	4x4x72	115	2
5D	VERTICAL	18"	0.500	4x4x72	115	2
5E	VERTICAL	18"	0.500	4x4x72	115	2
5G	BATTER	18"	0.500	4x4x72	115	2
6D	VERTICAL	18"	0.500	4x4x72	115	2
6E	BATTER (S)	18"	0.500	4x4x72	115	2
6G	BATTER (N)	18"	0.500	4x4x72	115	2

PILE ANODE SCHEDULE SUMMARY TABLE

LOCATION		DIAMETER (INCH)	WALL THICKNESS (INCH)	ANODE DIMENSION (INCH)	ANODE WEIGHT (LBS)	QUANTITY
7D	VERTICAL	18"	0.500	4x4x72	115	2
7E	VERTICAL	18"	0.500	4x4x72	115	2
7G	VERTICAL	18"	0.500	4x4x72	115	2
8D	VERTICAL	16"	0.500	4x4x72	115	2
8E	VERTICAL	16"	0.500	4x4x72	115	2
8G	VERTICAL	16"	0.500	4x4x72	115	2
9FN	BATTER	16"	0.500	4x4x72	115	2
9FS	BATTER	16"	0.500	4x4x72	115	2
9G	VERTICAL	16"	0.500	4x4x72	115	2
10FN	BATTER	16"	0.500	4x4x72	115	2
10FS	BATTER	16"	0.500	4x4x72	115	2
10G	VERTICAL	16"	0.500	4x4x72	115	2
11FN	BATTER	16"	0.500	4x4x72	115	2
11FS	BATTER	16"	0.500	4x4x72	115	2
11G	VERTICAL	16"	0.500	4x4x72	115	2
12F	VERTICAL	16"	0.500	4x4x72	115	2
12G	VERTICAL	16"	0.500	4x4x72	115	2
13CC	VERTICAL	16"	0.500	4X4X72	115	2
13CC	BATTER	16"	0.500	4X4X72	115	2
14CC	VERTICAL	16"	0.500	4X4X72	115	2
13G	VERTICAL	16"	0.500	4X4X72	115	2
14G	VERTICAL	16"	0.500	4X4X72	115	2

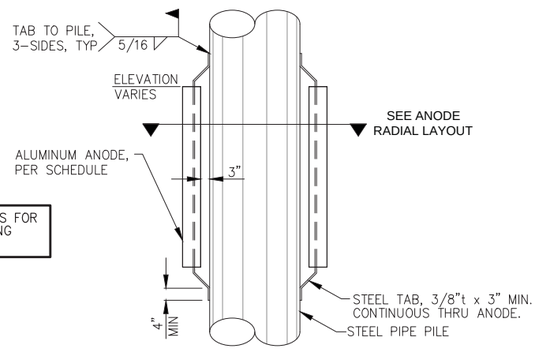

NOTE: SEE SPECIFICATIONS FOR FIELD WELD COATING REQUIREMENTS.

ANODE CONNECTION DETAIL

ANODE RADIAL LAYOUT

PIPE DIAMETER (INCH)	# ANODES / ELEV.	RADIAL LAYOUT (DEGREES)
16	2	180
18	2	180

SEE PLAN

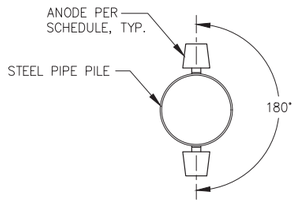

16" & 18" Ø PILE ANODE RADIAL LAYOUT PLAN

REVISIONS

REV.	DATE	DESCRIPTION	DWN.	CKD.	APP.

PND ENGINEERS, INC.
9360 Glacier Highway Ste 100
Juneau, Alaska 99801
Phone: 907-586-2093
Fax: 907-586-2099
www.pndengineers.com

DESIGN: MDS CHECKED: CRS
DRAWN: KLL APPROVED: CRS
SCALE: AS SHOWN
DATE: 5/23/2019

STATE OF ALASKA 49TH — Charles R. Somerville CE-8845 — REGISTERED PROFESSIONAL ENGINEER

DOWNTOWN WATERFRONT IMPROVEMENTS PHASE I
CBJ CONTRACT NO. DH19-014

SHEET TITLE: **PILE ANODES**

PND PROJECT NO.: 182045 C.A.N. NO.: AECC250

S5.01

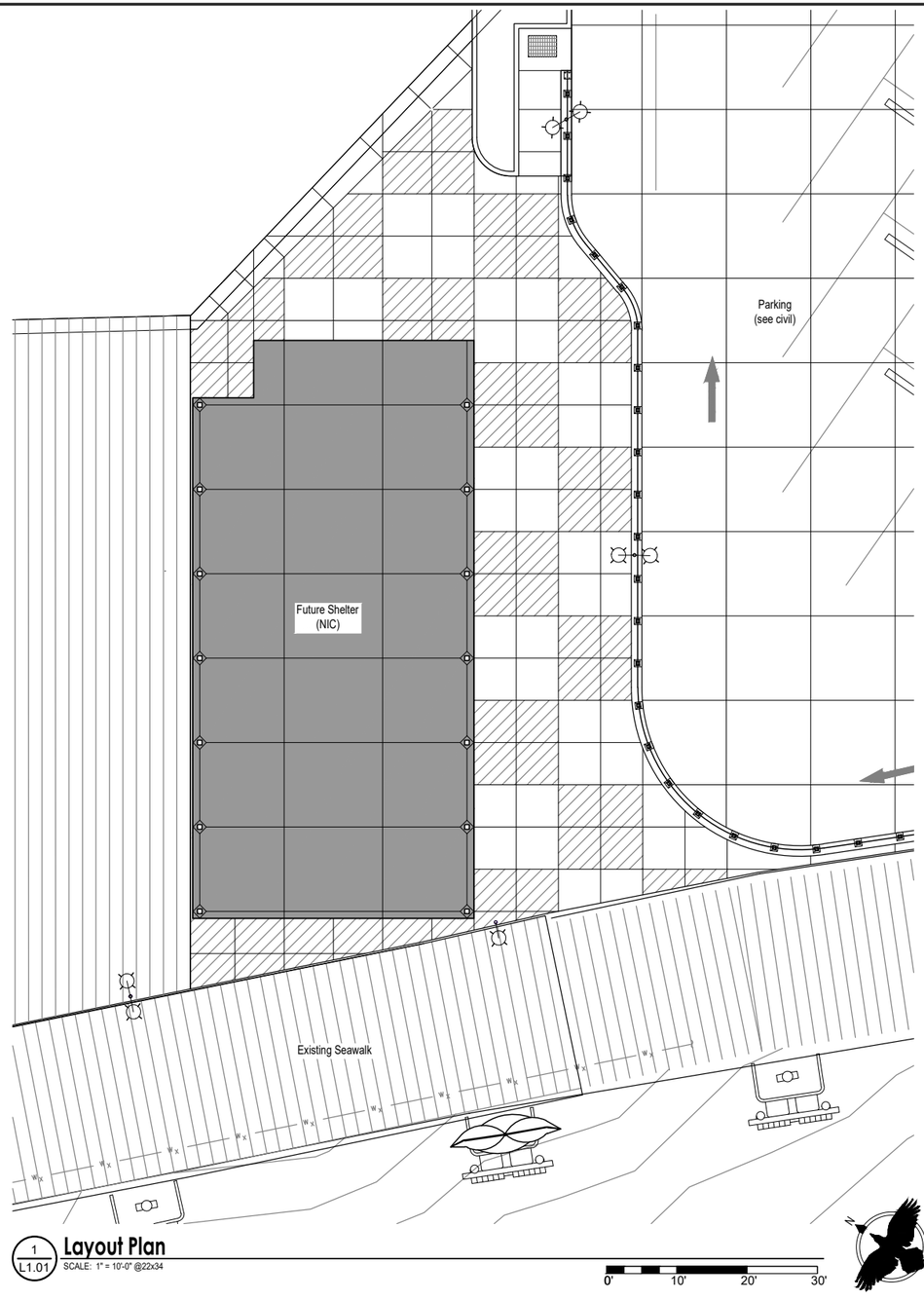

1 L1.01 **Layout Plan**
SCALE: 1" = 10'-0" @22x34

0' 10' 20' 30'

Paving Legend

- Concrete paving, see civil
- Sparkle concrete paving, see civil
- Colored concrete paving - silversmoke, see civil

Notes:
1. See civil for expansion and control joint layout of paved areas.

CITY & BOROUGH OF JUNEAU DOCKS & HARBORS

Corvus Design
Landscape Architecture
www.corvus-design.com

REVISIONS

REV.	DATE	DESCRIPTION	DWN.	CKD.	APP.

PND ENGINEERS, INC.
9360 Glacier Highway Ste 100
Juneau, Alaska 99801
Phone: 907-586-2093
Fax: 907-586-2099
www.pndengineers.com

DESIGN: LP/CM CHECKED: CM
DRAWN: LP APPROVED: CM
SCALE:
DATE: 5/23/2019

STATE OF ALASKA 49TH
Christopher R. Mertl
5/23/2019
No.10440
REGISTERED PROFESSIONAL LANDSCAPE ARCHITECT

DOWNTOWN WATERFRONT IMPROVEMENTS PHASE I
CBJ CONTRACT NO. DH19-014

SHEET TITLE: Concrete Paving Finish

PND PROJECT NO.: 182045 C.A.N. NO.: AECC250

L1.01 SHEET 1 OF 1

LEGEND

20/3	CIRCUIT BREAKER (AMPS/POLES)		LIGHT POLE
C/B	CIRCUIT BREAKER	NEC	NATIONAL ELECTRICAL CODE
CIVIL	CIVIL PROJECT DRAWINGS	N.I.C.	NOT IN CONTRACT
	CONTACTOR	NM	NON METALLIC
	DISCONNECT	PE	PHOTO ELECTRIC CELL
GRS	GALVANIZED RIGID STELL	REC	RECEPTACLE
GND	GROUND		RECEPTACLE, 120V, 20A INDUSTRIAL SPEC GRADE, WHITE WITH STAINLESS COVER PLATE
	GROUND BUSS	STRUCTURAL	STRUCTURAL PROJECT DRAWING SPECIFICATIONS
GFI	GROUND FAULT INTERRUPTER	UNISTRUT	SUPPORT CHANNEL UNISTRUT BRAND OR EQUAL
HT	HEAT TRACE	S	SWITCH, 120V, 20A INDUSTRIAL SPEC GRADE, WHITE WITH STAINLESS COVER PLATE
	HEAVY DUTY DISCONNECT (AMPS/POLES AS SHOWN)	(TYP)	TYPICAL
	HOME RUN	UHMW	ULTRA HIGH DENSITY MOLECULAR WEIGHT
LTG	LIGHTING	M	UTILITY METER
LC	LIGHTING CONTACTOR		

SHEET LIST TITLE

Sheet Number	Sheet Title
E1.01	OVERALL SITE PLAN – ELECTRICAL 1 OF 3
E1.02	OVERALL SITE PLAN – ELECTRICAL 2 OF 3
E1.03	OVERALL SITE PLAN – ELECTRICAL 3 OF 3
E1.04	PARTIAL CONCRETE DECK & TRENCH DETAIL – ELECTRICAL
E2.01	SINGLE LINE DIAGRAM
E2.02	EQUIPMENT & PANEL SCHEDULES
E2.03	ELECTRICAL RACK ELEVATIONS
E3.01	20' POLE DETAILS
E3.02	12' POLE DETAILS, LIGHT POLE TABLE & LUMINAIRE SCHEDULE
E3.03	LTG CONTROL SCHEMATIC & FUTURE POWER SINGLE LINE
E3.04	PARKING CANOPY PLAN – ELECTRICAL
E3.05	PARKING CANOPY SECTIONS AND DETAILS – ELECTRICAL
E4.01	FIBER CABLE RISER DIAGRAM
E4.02	EXISTING & NEW ACS RISER DIAGRAM
E4.03	CAMERA SCHEMATIC

NOTES:

1. REMOVE EXISTING LIGHT POLE AND REPLACE WITH TYPE A LUMINAIRE AND LIGHT POLE, SEE DETAILS 1 & 5, SHEET E3.01. BOLT LIGHT POLE BRACKET EXTENSION TO EXISTING ANCHOR BOLTS. BOLT NEW LIGHT POLE TO BRACKET EXTENSION. SEE STRUCTURAL FOR LIGHT POLE BRACKET EXTENSION. SPLICE EXISTING CONDUCTORS TO NEW CONDUCTORS (BRACKET EXTENSION HAS HANDHOLE TO ALLOW THIS WORK). POWER NEW LUMINAIRE FROM NEW CONDUCTORS (3 NO. 12). REUSE EXISTING CONDUCTORS FROM PANEL IN PARKING GARAGE TO POLE BASE (CKT 4 OR 12). SEE LIGHT POLE TABLE, SHEET E3.02. SEE LUMINAIRE SCHEDULE. PROVIDE POLES WITH BANNER ARMS.
2. REMOVE EXISTING WALL MOUNT LUMINAIRE. REPLACE WITH NEW TYPE D WALL MOUNT LUMINAIRE. USE CONCRETE ANCHORS (HILTE) TO SECURE TO PARKING GARAGE. FEED WITH SAME CIRCUIT AS EXISTING.

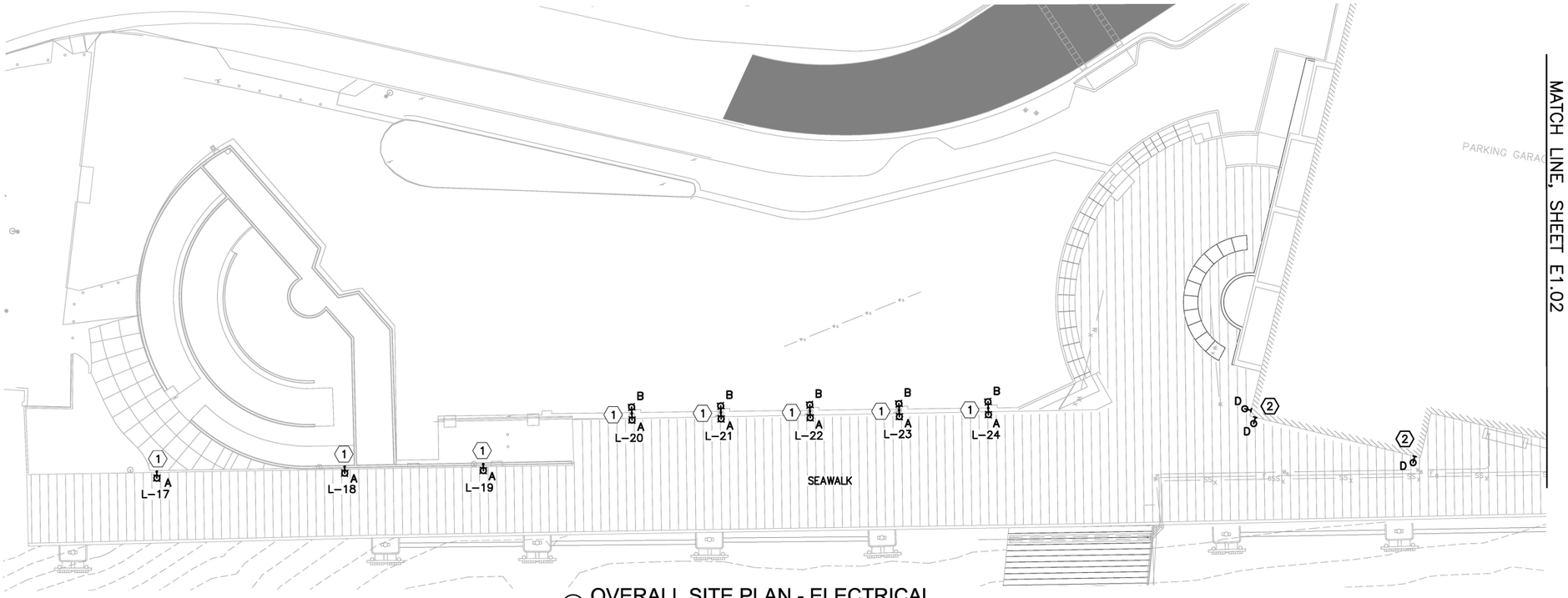

1 OVERALL SITE PLAN - ELECTRICAL

REVISIONS

REV.	DATE	DESCRIPTION	DWN.	CKD.	APP.

CITY & BOROUGH OF JUNEAU DOCKS & HARBORS

MORRIS ENGINEERING GROUP INC
2375 Jordan Avenue #7, Juneau, AK 99801
Phone: 907-789-3350, License: AECL1010

PND ENGINEERS, INC.
9360 Glacier Highway Ste 100
Juneau, Alaska 99801
Phone: 907-586-2093
Fax: 907-586-2099
www.pndengineers.com

DESIGN: MGM CHECKED: MGM
DRAWN: JRW APPROVED: MGM

SCALE: SCALE IN FEET 0 20 40 FT.

STATE OF ALASKA 49TH — Mark G. Morris, May 23, 2019, No. EE 8613, REGISTERED PROFESSIONAL ENGINEER

DATE: 5/23/2019

DOWNTOWN WATERFRONT IMPROVEMENTS PHASE I
CBJ CONTRACT NO. DH19-014

SHEET TITLE: **OVERALL SITE PLAN - ELECTRICAL 1 OF 3**

PND PROJECT NO.: 182045 C.A.N. NO.: ~~AECG250~~.DWG

E1.01

SHEET NOTES:

1. ALL ENCLOSURES AND JUNCTION BOXES SHALL BE 316 STAINLESS STEEL, NEMA 4X.
2. LIGHT POLES ARE NUMBERED L–1 TO L–29. SEE LIGHT POLE TABLE, SHEET E3.02 FOR FOUNDATION TO BE USED. TYPE OF LUMINAIRE NEXT TO LIGHT POLE (A, B, C, OR D), SEE LUMINAIRE SCHEDULE.
3. INSTALL ALL EQUIPMENT PER CIVIL.
4. SEE EQUIPMENT SCHEDULE, SHEET E2.02 FOR (#) EQUIPMENT NUMBERS.
5. SUPPORT CONDUIT AND ENCLOSURE UNDER DOCK ON SUPPORT CHANNEL. SIZE AND QUANTITY AS REQUIRED. ROUTE CONDUIT BETWEEN BEAMS, UNDER BEAMS, ETC. AS REQUIRED. MANY BENDS MAY BE REQUIRED. MOUNT ENCLOSURES UNDER BEAMS OR ON SIDE OF BEAMS AS NEEDED. ROUTE CONDUIT AROUND STRUCTURE, WATER, & SEWER LINES, ETC.

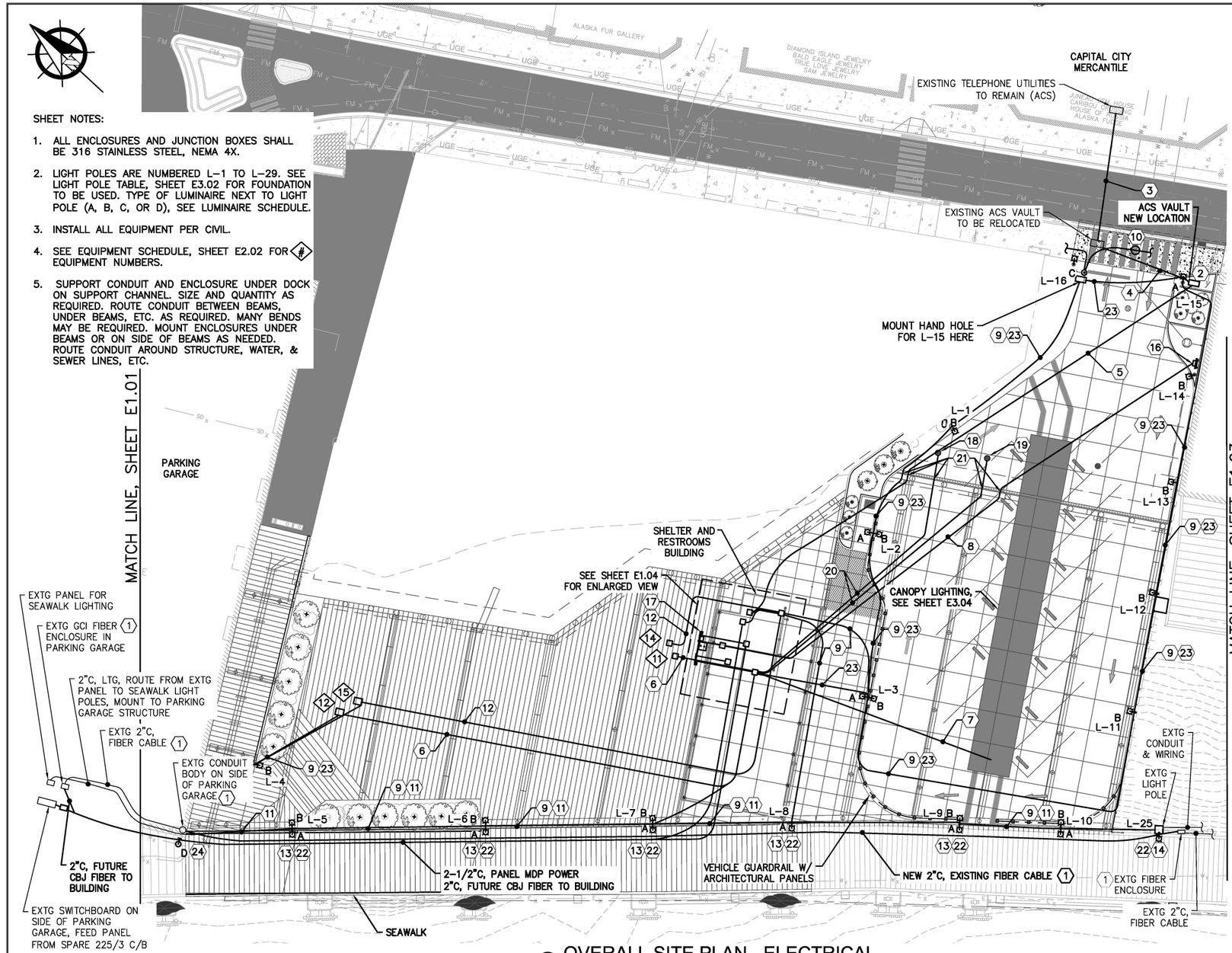

1 OVERALL SITE PLAN - ELECTRICAL

KEY NOTES:

1. REMOVE FIBER CABLE FROM TERMINATION POINT IN PARKING GARAGE AND PULL OUT OF CONDUIT BACK TO EXISTING ENCLOSURE JUST SOUTH OF PROJECT BOUNDARY. REMOVE CONDUIT ON SEAWALK BETWEEN PARKING GARAGE AND ENCLOSURE. REPLACE WITH NEW CONDUIT ROUTED UNDER SEAWALK. RE–PULL FIBER CABLE AND RE–TERMINATE.
2. RELOCATE ACS VAULT AND EXTEND EXISTING 4"C & 2"C FROM EXISTING VAULT LOCATION TO NEW LOCATION. PROVIDE 2"C FROM RELOCATED VAULT TO ENCLOSURE UNDER DECK AT FUTURE BUILDING LOCATION.
3. EXISTING 4"C & 2"C EXTEND TO RELOCATED ACS VAULT. USE RMC.
4. 4"C & 2"C, CONNECT TO EXISTING CONDUIT AND ROUTE TO RELOCATED VAULT.
5. 2"C, ROUTE TO ACS ENCLOSURE FOR FUTURE BUILDING.
6. 2"C, 2 NO. 8 & 1 NO. 10 GND (LTG), 4 NO. 8 & 1 NO. 10 GND (REC). MOUNT TO UNDERSIDE OF DECK ON SUPPORT CHANNEL.
7. 2"C, 2 NO. 8 & 1 NO. 10 GND. STUB UP INTO CANOPY COLUMN. SEE DETAILS SHEET E3.05.
8. (1) 2"C, LIFT STATION POWER.
   (1) 2"C, SPARE.
9. 2"C, FUTURE CAMERA ROUTE TO 12" X 12" X 6" JUNCTION BOX AT EACH LIGHT POLE. SEE DETAIL 3, SHEET E3.01. WHERE POLE IS MOUNTED ON CONCRETE BASE, ROUTE TO J–BOX NEXT TO POLE, SEE DETAIL 4, SHEET E3.01.
10. EXISTING CBJ STREET LIGHT TO BE REMOVED AND REPLACED BY LIGHT POLE WITH TYPE C LUMINAIRE. ROUTE EXISTING CONDUIT TO NEW POLE. PULL NEW CONDUCTORS BETWEEN EXISTING POLES ON EACH SIDE.
11. 2"C, 6 NO. 8 & 1 NO. 8 GND, ROUTE TO 12" X 12" X 6" JUNCTION BOX AT EACH LIGHT POLE, SEE DETAIL 3 SHEET E3.01.
12. 2"C, FUTURE CAMERA TO 24" X 24" X 12" ENCLOSURE.
13. REMOVE EXISTING LIGHT POLE, MOUNTING BRACKET, AND CONDUIT BACK TO PARKING GARAGE. PROVIDE NEW LIGHT POLE AND LUMINAIRES AS SHOWN. PROVIDE NEW CONDUIT AND WIRING. RE–POWER ON SAME CIRCUITS (CKTS 6, 8, & 10).
14. REMOVE EXISTING LIGHT POLE REPLACE WITH TYPE A LUMINAIRE AND LIGHT POLE SEE DETAIL 1 & 5, SHEET E3.01. BOLT LIGHT POLE BRACKET EXTENSION TO EXISTING ANCHOR BOLTS. BOLT NEW LIGHT POLE TO LIGHT POLE BRACKET EXTENSION. SPLICE EXISTING CONDUCTORS TO NEW CONDUCTORS (BRACKET EXTENSION HAS HANDHOLE TO ALLOW THIS WORK). POWER NEW LUMINAIRE FROM NEW CONDUCTORS (3 NO. 12). REUSE EXISTING CONDUCTORS FROM PANEL IN PARKING GARAGE TO POLE BASE (CKTS 6, 8, & 10).
15. (2) 2"C, SPARE
16. DISCONNECT AND LIFT STATION CONTROL PANEL MOUNT TO RACK ADJACENT LIFT STATION, SEE DETAIL 2, SHEET E2.03.
17. PANEL MDP, TRANSFORMER, PANEL B, & LIGHTING CONTACTOR ON RACK, SEE SHEET E2.03.
18. WATER MANHOLE. SEE CIVIL.
19. SEWER MANHOLE. SEE CIVIL.
20. 2"C, SPARE.
21. ROUTE CONDUIT AT 90° ANGLE TO WALL. SLEEVE ALL CONDUIT PENETRATIONS IN WALL. COORDINATE WITH FABRICATOR OF CONCRETE ABUTMENT. SEE CIVIL.
22. PROVIDE POLE WITH BANNER ARMS. SEE DETAIL 1, SHEET E3.01.
23. 2"C, 4 NO. 8 & 1 NO. 10 GND LIGHTING (2 NO. 8), SPARE (2 NO. 8).
24. REMOVE EXISTING WALL MOUNT LUMINAIRE. REPLACE WITH NEW TYPE D WALL MOUNT LUMINAIRE. USE CONCRETE ANCHORS (HILTE) TO SECURE TO PARKING GARAGE. FEED WITH SAME CIRCUIT AS EXISTING.

CITY & BOROUGH OF JUNEAU DOCKS & HARBORS

MORRIS ENGINEERING GROUP INC
2375 Jordan Avenue #7, Juneau, AK 99801
Phone: 907-789-3350, License: AECL1010

REVISIONS

REV.	DATE	DESCRIPTION	DWN.	CKD.	APP.

PND ENGINEERS, INC.
9360 Glacier Highway Ste 100
Juneau, Alaska 99801
Phone: 907-586-2093
Fax: 907-586-2099
www.pndengineers.com

DESIGN: MGM CHECKED: MGM
DRAWN: JRW APPROVED: MGM
SCALE: SCALE IN FEET 0 20 40 FT.

STATE OF ALASKA 49TH
Mark G. Morris
May 23, 2019
No. EE 8813
REGISTERED PROFESSIONAL ENGINEER
DATE: 5/23/2019

DOWNTOWN WATERFRONT IMPROVEMENTS PHASE I
CBJ CONTRACT NO. DH19-014

SHEET TITLE:
OVERALL SITE PLAN - ELECTRICAL 2 OF 3

PND PROJECT NO.: 182045 C.A.N. NO.: ~~AECG250~~.DWG

E1.02

NOTES:

1. REMOVE EXISTING LIGHT POLE AND REPLACE WITH TYPE A LUMINAIRE AND LIGHT POLE, SEE DETAILS 1 & 5, SHEET E3.01. BOLT LIGHT POLE BRACKET EXTENSION TO EXISTING ANCHOR BOLTS. BOLT NEW LIGHT POLE TO BRACKET EXTENSION. SEE STRUCTURAL FOR LIGHT POLE BRACKET EXTENSION. SPLICE EXISTING CONDUCTORS TO NEW CONDUCTORS (BRACKET EXTENSION HAS HANDHOLE TO ALLOW THIS WORK). POWER NEW LUMINAIRE FROM NEW CONDUCTORS (3 NO. 12). REUSE EXISTING CONDUCTORS FROM PANEL IN PARKING GARAGE TO POLE BASE (CKT 6, 8 OR 10). SEE LIGHT POLE TABLE, SHEET E3.02. SEE LIMINAIRE SCHEDULE. PROVIDE POLES WITH BANNER ARMS.

GENERAL NOTES (APPLICABLE ALL SHEETS):

1. ALL WORK ON ALL SHEETS IS NEW UNLESS OTHERWISE NOTED.
2. PERFORM ALL WORK PER THE 2017 NATIONAL ELECTRIC CODE (NEC) AND OTHER APPLICABLE NATIONAL, STATE, AND LOCAL CODES AND STANDARDS. PROVIDE EQUIPMENT AND AN INSTALLATION THAT COMPLIES WITH ARTICLE 555 OF THE NEC.
3. MOUNT ALL OF THE ELECTRICAL EQUIPMENT IN THE LOCATIONS SHOWN ON THE CIVIL DRAWINGS. LOCATIONS SHOWN ON THE ELECTRICAL DRAWINGS ARE APPROXIMATE.
4. SEE CIVIL AND STRUCTURAL DRAWINGS FOR MOUNTING ALL ELECTRICAL EQUIPMENT AS WELL AS ELECTRICAL DRAWINGS. MOUNTING POSTS, LIGHT POLE BASE DETAILS, CABLE TRAY, PEDESTAL FRAMES, ETC. ARE DETAILED ON THE CIVIL DRAWINGS. MOUNT ELECTRICAL EQUIPMENT AS SHOWN ON BOTH ELECTRICAL AND CIVIL DRAWINGS. SIZE MOUNTING BOLTS, BRACKETS, HARDWARE, ETC. FOR A SAFETY FACTOR OF 5 MINIMUM. ALL EQUIPMENT AND MATERIALS SHALL NOT MOVE WHEN PULLED OR PUSHED BY HAND (EXCEPT CABLES AND FLEXIBLE CONDUIT). SECURE ALL CONDUIT WITHIN 12 INCHES OF END OF CONDUIT AND AS REQUIRED PER NEC.
5. FIELD TREAT ALL HOT DIPPED GALVANIZED MATERIALS THAT ARE CUT, DRILLED, SCRATCHED OR DAMAGED. SEE CIVIL FOR FIELD TREATMENT.
6. ALL CONDUCTORS SHALL BE COPPER, ALL INSULATION SHALL BE 600V RATED. TYPE XHHW FOR CONDUCTORS NOT IN A CABLE. ALL CABLES SHALL BE THE TYPE SPECIFIED, NO SUBSTITUTIONS.
7. IF GALVANIZED THREADS ARE CHASED IN ORDER TO BE USABLE, TREAT CHASED THREADS WITH BRAKE CLEANER, THEN COAT WITH MARINE TRAILER WHEEL BEARING GREASE BEFORE APPLYING A STAINLESS STEEL WASHER AND NUT. APPLY GREASE AFTER DRILLING AND TAPPING.
8. USE 316 STAINLESS STEEL BOLTS, WASHERS, ETC. TO MOUNT ELECTRICAL EQUIPMENT AND STRUT CHANNEL. ALL FASTENERS AND OTHER EXPOSED HARDWARE SHALL BE 316 STAINLESS STEEL. ALL STAINLESS STEEL SHALL BE 316 STAINLESS STEEL.
9. SEAL ALL PENETRATIONS IN ELECTRICAL EQUIPMENT WITH UL LISTED HARDWARE FOR SUCH USE. USE RUBBER OR SILICONE WASHERS IN ADDITION TO STAINLESS STEEL WASHERS.
10. USE 316 STAINLESS STEEL SUPPORT CHANNEL (UNISTRUT) TO SUPPORT CONDUIT, PANELS, CONTACTORS, ENCLOSURES, AND ALL OTHER ELECTRICAL EQUIPMENT. TRIM SUPPORT CHANNEL 1/4" SHORT OF EDGE OF EQUIPMENT AND POSTS. SAND END OF SUPPORT CHANNEL SMOOTH. USE CABLE SUPPORTS THAT COMPLY WITH 555.13(4). USE CUSHION STRAPS WHEN SUPPORTING CABLE TO SUPPORT CHANNEL. PROVIDE SUPPORT CHANNEL UNDER DOCK, SPACING AND QUANTITY AS REQUIRED.
11. PROVIDE OXIDE INHIBITING COMPOUND ON ALL ELECTRICAL CONNECTIONS. BURNDY PENETROX TYPE A OR E AS REQUIRED.
12. ALL LUGS AND ELECTRICAL TERMINALS SHALL BE COPPER OR TIN PLATED HIGH CONDUCTIVE ALUMINUM.
13. THE PART NUMBERS SHOWN ON THE DRAWINGS ARE NOT TO BE USED AS A BILL OF MATERIALS. VERIFY ALL PART NUMBERS ARE CORRECT PRIOR TO ORDERING, VERIFY ALL REQUIRED OR NECESSARY ACCESSORIES, FEATURES, MATERIAL TYPE, ETC. ARE INCLUDED.
14. BUILD THE PROJECT AS DESIGNED. DO NOT ASSUME THE DESIGN WILL BE CHANGED AT THE CONTRACTOR'S REQUEST.
15. PROVIDE CONDUIT BODIES IN ALL CONDUIT RUNS AS REQUIRED FOR NUMBER OF BENDS AND AS NEEDED.
16. USE RIGID STEEL CONDUIT WHERE IMPRACTICAL TO USE SCHEDULE 80 PVC DUE TO SPACING BETWEEN SUPPORTS OR OTHER FACTORS.



1 OVERALL SITE PLAN - ELECTRICAL

CITY & BOROUGH OF JUNEAU DOCKS & HARBORS

MORRIS ENGINEERING GROUP INC
2375 Jordan Avenue #7, Juneau, AK 99801
Phone: 907-789-3350, License: AECL1010

REVISIONS

REV.	DATE	DESCRIPTION	DWN.	CKD.	APP.

PND ENGINEERS, INC.
9360 Glacier Highway Ste 100
Juneau, Alaska 99801
Phone: 907-586-2093
Fax: 907-586-2099
www.pndengineers.com

DESIGN: MGM CHECKED: MGM
DRAWN: JRW APPROVED: MGM
SCALE: SCALE IN FEET 0 20 40 FT.

STATE OF ALASKA 49TH
Mark G. Morris
May 23, 2019
No. EE 8613
REGISTERED PROFESSIONAL ENGINEER
DATE: 5/23/2019

DOWNTOWN WATERFRONT IMPROVEMENTS PHASE I
CBJ CONTRACT NO. DH19-014

SHEET TITLE:
OVERALL SITE PLAN - ELECTRICAL 3 OF 3

PND PROJECT NO.: 182045 C.A.N. NO.: ~~AEGC250~~.DWG

E1.03

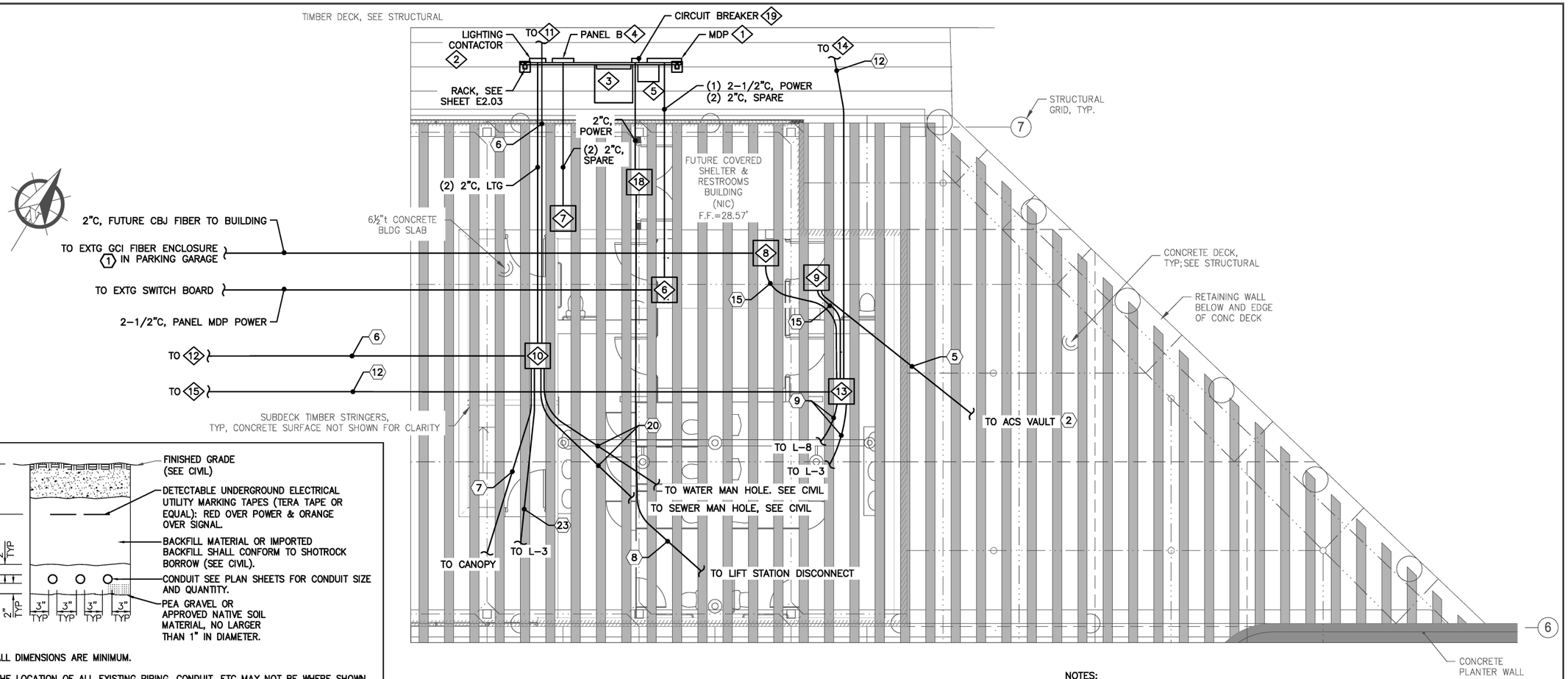

NOTES:

1. SEE SHEET E1.02 FOR (#) KEY NOTES.
2. SEE EQUIPMENT SCHEDULE, SHEET E2.02 FOR ◇# EQUIPMENT NUMBERS.

1 PARTIAL CONCRETE DECK - ELECTRICAL

NOTES:

1. ALL DIMENSIONS ARE MINIMUM.
2. THE LOCATION OF ALL EXISTING PIPING, CONDUIT, ETC MAY NOT BE WHERE SHOWN AND MAY NOT BE SHOWN. ALL LOCATIONS THAT ARE SHOWN ARE APPROXIMATE AND SHOULD BE FIELD VERIFIED. OBTAIN UTILITY LOCATES PRIOR TO DIGGING. DIG WITH CAUTION. AVOID WATER, SEWER, DRAINAGE PIPES AND OTHER CONFLICTS.
3. MAINTAIN 12 INCHES MINIMUM SEPARATION (ALL DIRECTIONS) BETWEEN POWER AND OTHER EXISTING CONDUITS, PIPES, CONCRETE STRUCTURE, VAULTS, ETC.
4. CUT & REPLACE EXISTING ASPHALT, CONCRETE, CONCRETE CURB, GUTTER, SIDEWALK, ETC. AS NECESSARY.
5. ALL TRENCHES SHALL BE 18" WIDE MIN. COMPACT BACKFILL PER CIVIL. TOP 6" OF MATERIAL PER CIVIL.
6. POWER UTILITY CONDUIT SHALL BE BURIED AT A MINIMUM OF 3'.
7. MODIFY CONDUIT BURIAL DEPTH WHERE SHOWN ON DRAWINGS.
8. MAINTAIN 36" MINIMUM LATERAL SEPARATION FROM WATER AND SEWER LINES. MAINTAIN 12" SEPARATION BETWEEN ELECTRICAL UTILITY CONDUITS.

2 TRENCH DETAIL
NO SCALE

CITY & BOROUGH OF JUNEAU DOCKS & HARBORS

MORRIS ENGINEERING GROUP INC
2375 Jordan Avenue #7, Juneau, AK 99801
Phone: 907-789-3350, License: AECL1010

REVISIONS

REV.	DATE	DESCRIPTION	DWN.	CKD.	APP.

PND ENGINEERS, INC.
9360 Glacier Highway Ste 100
Juneau, Alaska 99801
Phone: 907-586-2093
Fax: 907-586-2099
www.pndengineers.com

DESIGN: MGM CHECKED: MGM
DRAWN: JRW APPROVED: MGM
SCALE:

STATE OF ALASKA 49TH
Mark G. Morris
May 23, 2019
No. EE 8613
REGISTERED PROFESSIONAL ENGINEER
DATE: 5/23/2019

DOWNTOWN WATERFRONT IMPROVEMENTS PHASE I
CBJ CONTRACT NO. DH19-014

SHEET TITLE:
PARTIAL CONCRETE DECK & TRENCH DETAIL - ELECTRICAL

PND PROJECT NO.: 182045 C.A.N. NO.: AECC250

E1.04

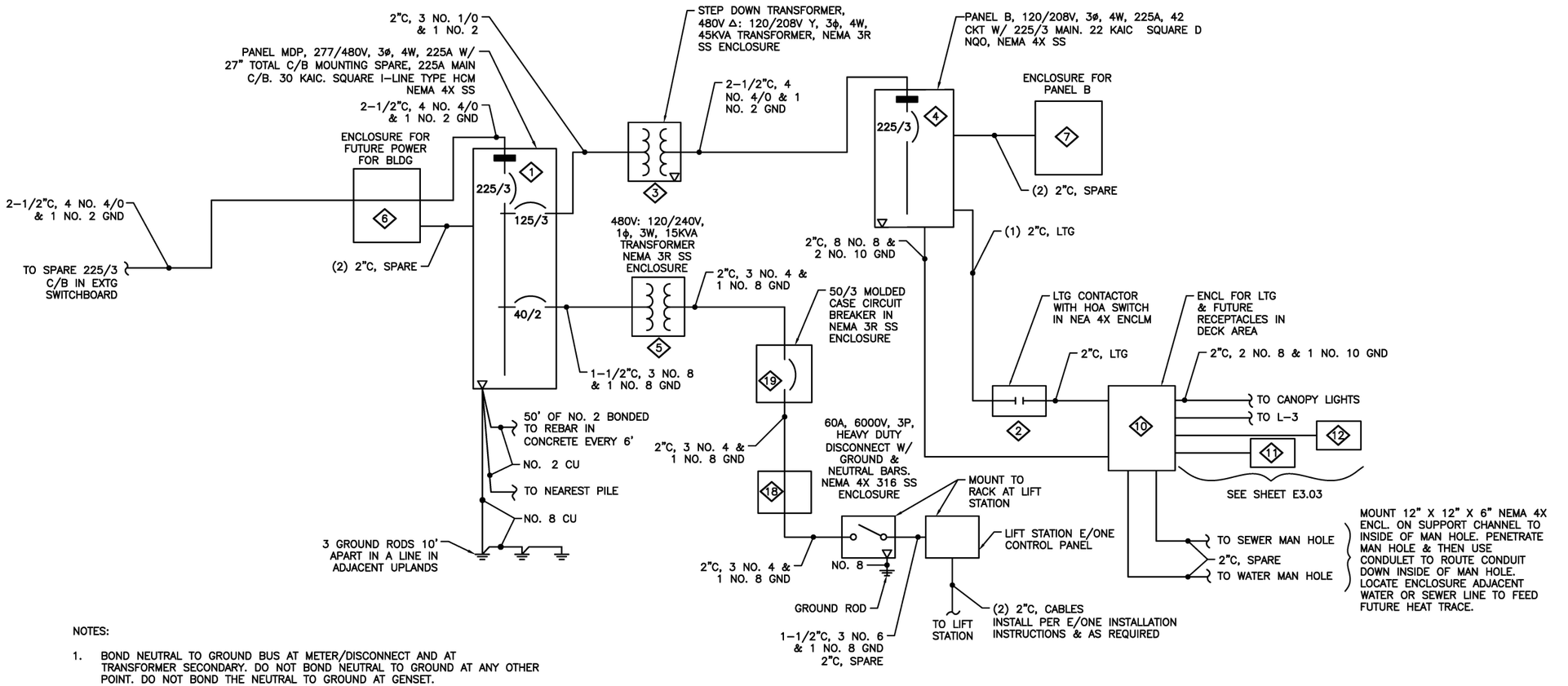

NOTES:

1. BOND NEUTRAL TO GROUND BUS AT METER/DISCONNECT AND AT TRANSFORMER SECONDARY. DO NOT BOND NEUTRAL TO GROUND AT ANY OTHER POINT. DO NOT BOND THE NEUTRAL TO GROUND AT GENSET.
2. THE TRANSFORMER SECONDARY FEEDER THAT FEEDS PANEL G SHALL BE NO MORE THAN 10' LONG. SAME FOR FEEDER TO 5D/3 C/B FROM TRANSFORMER (5)
3. SEE EQUIPMENT SCHEDULE, SHEET E2.02 FOR (#) EQUIPMENT NUMBERS.

(1) SINGLE LINE DIAGRAM
NO SCALE

CITY & BOROUGH OF JUNEAU DOCKS & HARBORS

MORRIS ENGINEERING GROUP INC
2375 Jordan Avenue #7, Juneau, AK 99801
Phone: 907-789-3350, License: AECL1010

REVISIONS

REV.	DATE	DESCRIPTION	DWN.	CKD.	APP.

PND ENGINEERS, INC.
9360 Glacier Highway Ste 100
Juneau, Alaska 99801
Phone: 907-586-2093
Fax: 907-586-2099
www.pndengineers.com

DESIGN: MGM CHECKED: MGM
DRAWN: JRW APPROVED: MGM
SCALE:

STATE OF ALASKA 49TH
Mark G. Morris
May 23, 2019
No. EE 8813
REGISTERED PROFESSIONAL ENGINEER
DATE: 5/23/2019

DOWNTOWN WATERFRONT IMPROVEMENTS PHASE I
CBJ CONTRACT NO. DH19-014

SHEET TITLE: **SINGLE LINE DIAGRAM**

PND PROJECT NO.: 182045 C.A.N. NO.: AECC250

E2.01

EQUIPMENT SCHEDULE

1. PANEL MDP, MOUNT TOP AT 72" AFG, SQUARE D I-LINE. 277/480V, 3ϕ, 4 WIRE, 225 AMP, W/ 225 AMP MAIN. SEE SINGLE LINE DIAGRAM, E2.01.
2. LIGHTING CONTACTOR. 30A, 30 KAIC, 6 POLE LIGHTING CONTACTOR WITH HOA SWITCH. CONTROL ON AUTOSIDE WITH NEMA RATED PHOTOCELL MOUNTED ON CONDUIT ON RACK AT 6'. MOUNT IN J-BOX TO SHIELD FROM SITE LIGHTING. USE CONTACTOR TO CONTROL EXTERIOR LIGHTS. SEE LIGHTING CONTROL SCHEMATIC, SHEET E3.03.
3. STEP DOWN TRANSFORMER. 480VΔ:120/208V Y, 3ϕ, 4 WIRE, 45 KVA. FLOOR MOUNT WITH COPPER WINDINGS. SQUARE D EX45ST3HCU. BOLT TO PLATE. DRILL AND TAP PLATE. SEE STRUCTURAL.
4. PANEL B. MOUNT TOP AT 72" AFF. SQUARE D NQO. SERIES. 120/280V, 3ϕ, 4 WIRE, 225 AMP, W/ 225A MAIN, 22 KAIC, 42 CKT. SEE SINGLE LINE DIAGRAM, E2.01.
5. NEMA 3R TRANSFORMER. STAINLESS STEEL ENCLOSURE, 480V:120/240V 1ϕ, 3W, 15 KVA. BOLT TO PLATE. DRILL AND TAP PLATE. SEE STRUCTURAL.
6. 24" X 24" X 12" NEMA 4X ENCLOSURE FOR FUTURE POWER TO BUILDING MOUNT TO SUPPORT CHANNEL ON UNDERSIDE OF DECK SPANNING BEAMS.
7. 24" X 24" X 12" NEMA 4X ENCLOSURE FOR PANEL B MOUNT TO SUPPORT CHANNEL ON UNDERSIDE OF DECK SPANNING BEAMS.
8. 24" X 24" X 12" NEMA 4X ENCLOSURE FOR FUTURE CBJ NETWORK FIBER CABLE TO BUILDING. MOUNT TO UNDERSIDE OF DECK ON SUPPORT CHANNEL SPANNING BEAMS.
9. 24" X 24" X 12" NEMA 4X ENCLOSURE, MOUNT ON SUPPORT CHANNEL TO UNDERSIDE OF DECK (SAME FOR OTHER ENCLOSURES). ACS TELEPHONE. MOUNT TO UNDERSIDE OF DECK ON SUPPORT CHANNEL SPANNING BEAMS.
10. 24" X 24" X 12" NEMA 4X ENCLOSURE FOR FUTURE LIGHTING/RECEPTACLES IN DECK AREA. MOUNT TO UNDERSIDE OF DECK WITH SUPPORT CHANNEL.
11. 24" X 24" X 12" NEMA 4X ENCLOSURE FOR FUTURE LIGHTING/RECEPTACLES IN DECK AREA. MOUNT TO UNDERSIDE OF DECK WITH SUPPORT CHANNEL.
12. 24" X 24" X 12" NEMA 4X ENCLOSURE FOR FUTURE LIGHTING/RECEPTACLES IN DECK AREA. MOUNT TO UNDERSIDE OF DECK WITH SUPPORT CHANNEL.
13. 24" X 24" X 12" NEMA 4X ENCLOSURE FOR FUTURE CAMERA. MOUNT TO UNDERSIDE OF DECK ON SUPPORT CHANNEL SPANNING BEAMS.
14. 24" X 24" X 12" NEMA 4X ENCLOSURE FOR FUTURE CAMERA. MOUNT TO UNDERSIDE OF DECK ON SUPPORT CHANNEL SPANNING BEAMS.
15. 24" X 24" X 12" NEMA 4X ENCLOSURE FOR FUTURE CAMERA. MOUNT TO UNDERSIDE OF DECK ON SUPPORT CHANNEL SPANNING BEAMS.
16. LIFT STATION CONTROL PANEL, E/ONE, SEE CIVIL. MOUNT TO RACK, DETAIL 2, SHEET E2.03.
17. HEAVY DUTY DISCONNECT, 60A, 600V, 3P, WITH GROUND AND NEUTRAL BARS. NEMA 4X 316 SS ENCLOSURE. MOUNT TO RACK, DETAIL 2, SHEET E2.03.
18. 24" X 24" X 12" NEMA 4X ENCLOSURE FOR LIFT STATION POWER MOUNT TO SUPPORT CHANNEL ON UNDERSIDE OF DECK SPANNING BEAMS.
19. 50/3 MOLDED CASE CIRCUIT BREAKER IN NEMA 3R SS ENCLOSURE. MOUNT TO RACK, DETAIL 1, E2.03

PANEL B		SIZE	VOLTS, PHASE			MOUNTING		MAIN	LOCATION	
		225A	120/208V, 3ϕ, 4W			SURFACE		225/3	RACK ON DECK	
CKT NO.	DESCRIPTION	C/B SIZE	KVA					C/B SIZE	DESCRIPTION	CKT NO.
			CKT	Aϕ	Bϕ	Cϕ	CKT			
1	RECEPTACLE IN DECK (11)	20/1	0.0	0.4			0.4	20/2	CANOPY LIGHTING	2
3	RECEPTACLE IN DECK (11)	20/1	0.0		0.4		0.4	–	–	4
5	RECEPTACLE IN DECK (12)	20/1	0.0			0.5	0.5	20/2	LIGHTING IN PARKING AREA	6
7	RECEPTACLE IN DECK (12)	20/1	0.0	0.5			0.5	–	–	8
9	SPARE		0.0		0.0		0.0	20/2	LUMINAIRES ON DECK (11)	10
11			0.0			0.0	0.0	–	–	12
13			0.0	0.0			0.0	20/2	LUMINAIRES ON DECK (12)	14
15			0.0		0.0		0.0	–	–	16
17			0.0			0.0	0.0	20/1	SPARE	18
19			0.0	0.0			0.0			20
21			0.0		0.0		0.0			22
23			0.0			0.0	0.0			24
25			0.0	0.0			0.0			26
27			0.0		0.0		0.0			28
29			0.0			0.0	0.0			30
31			0.0	0.0			0.0			32
33			0.0		0.0		0.0			34
35			0.0			0.0	0.0			36
37			0.0	0.0			0.0			38
39			0.0		0.0		0.0			40
41			0.0			0.0	0.0			42
TOTAL CONNECTED LOAD = 1.8 KVA/ 5 AMPS				0.9	0.4	0.5				

PANEL MDP		SIZE	VOLTS, PHASE			MOUNTING		MAIN	LOCATION	
		225A	277/480V, 3ϕ, 4W			SURFACE		225/3	RACK ON DECK	
CKT NO.	DESCRIPTION	C/B SIZE	KVA					C/B SIZE	DESCRIPTION	CKT NO.
			CKT	Aϕ	Bϕ	Cϕ	CKT			
1			0.0	1.0			1.0	125/3	PANEL B VIA TRANSFORMER	2
3			0.0		1.0		1.0	–	–	4
5			0.0			1.0	1.0	–	–	6
7			0.0	3.5			3.5	40/2	E/ONE LIFT STATION	8
9			0.0		3.5		3.5	–	–	10
11			0.0			0.0	0.0			12
13			0.0	0.0			0.0			14
15			0.0		0.0		0.0			16
17			0.0			0.0	0.0			18
TOTAL CONNECTED LOAD = 10.0 KVA/ 12 AMPS				4.5	4.5	1.0				
* PANEL MDP IS A PANEL WITH 27 INCHES TOTAL CIRCUIT BREAKER MOUNTING SPACE										

CITY & BOROUGH OF JUNEAU DOCKS & HARBORS

MORRIS ENGINEERING GROUP INC
2375 Jordan Avenue #7, Juneau, AK 99801
Phone: 907-789-3350, License: AECL1010

REVISIONS

REV.	DATE	DESCRIPTION	DWN.	CKD.	APP.

PND ENGINEERS, INC.
9360 Glacier Highway Ste 100
Juneau, Alaska 99801
Phone: 907-586-2093
Fax: 907-586-2099
www.pndengineers.com

DESIGN: MGM CHECKED: MGM
DRAWN: JRW APPROVED: MGM
SCALE:
DATE: 5/23/2019

STATE OF ALASKA 49TH — Mark G. Morris, May 23, 2019, No. EE 8613, REGISTERED PROFESSIONAL ENGINEER

DOWNTOWN WATERFRONT IMPROVEMENTS PHASE I
CBJ CONTRACT NO. DH19-014

SHEET TITLE: **EQUIPMENT & PANEL SCHEDULES**

PND PROJECT NO.: 182045 | C.A.N. NO.: AECC250

E2.02

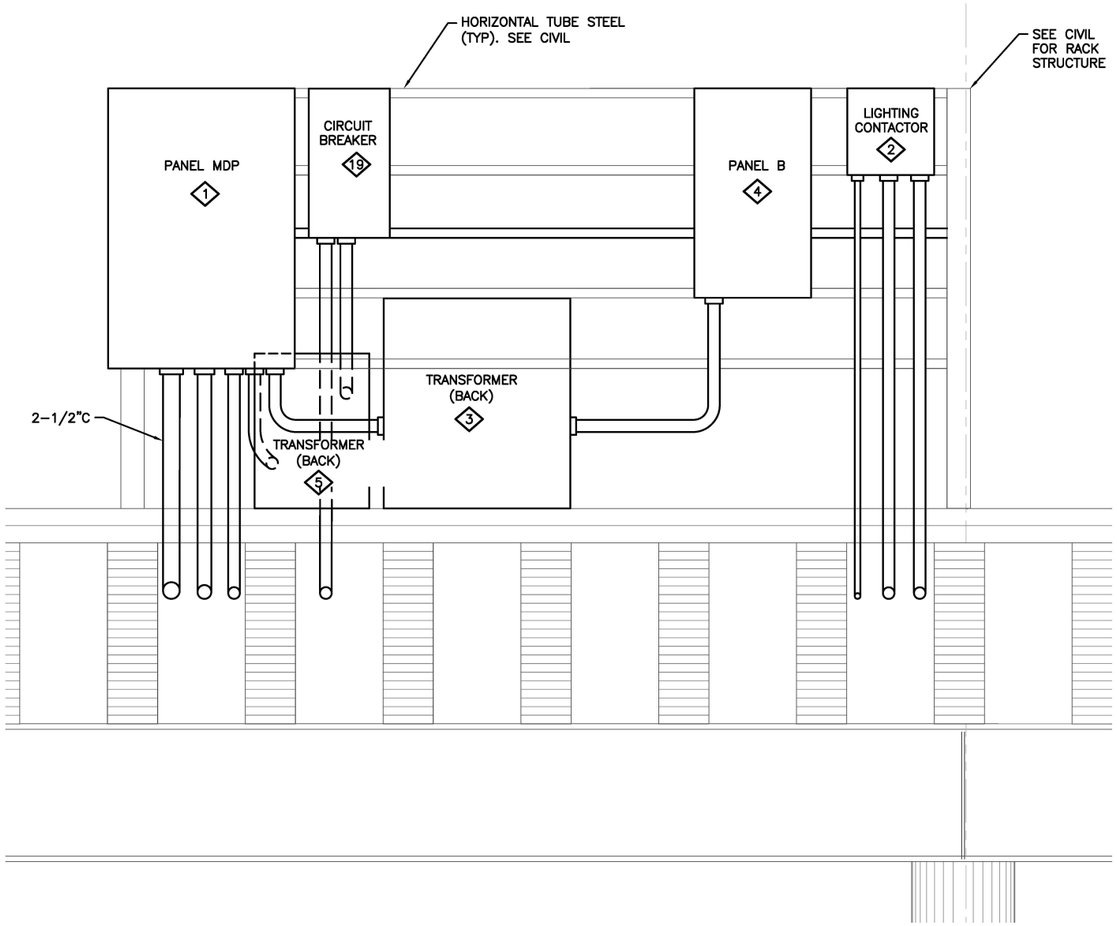

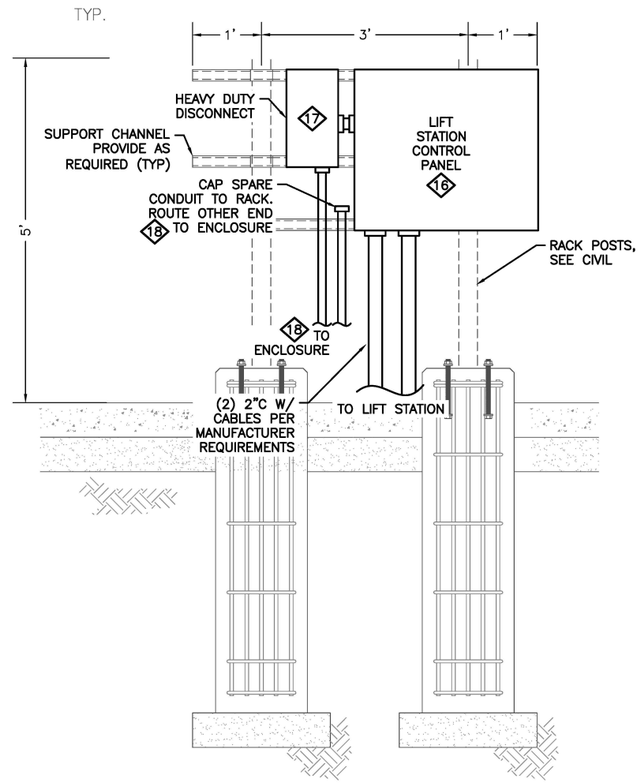

NOTE:

1. SEE EQUIPMENT SCHEDULE, SHEET E2.02 FOR (#) EQUIPMENT NUMBERS.

① ELECTRICAL RACK ELEVATION — 3" 6" 1' 2'

② LIFT STATION SUPPORT RACK — 3" 6" 1' 2'

CITY & BOROUGH OF JUNEAU — DOCKS & HARBORS

MORRIS ENGINEERING GROUP INC
2375 Jordan Avenue #7, Juneau, AK 99801
Phone: 907-789-3350, License: AECL1010

REVISIONS

REV.	DATE	DESCRIPTION	DWN.	CKD.	APP.

PND ENGINEERS, INC.
9360 Glacier Highway Ste 100
Juneau, Alaska 99801
Phone: 907-586-2093
Fax: 907-586-2099
www.pndengineers.com

DESIGN: MGM CHECKED: MGM
DRAWN: JRW APPROVED: MGM
SCALE:

STATE OF ALASKA — 49TH — Mark G. Morris — May 23, 2019 — No. EE 8613 — REGISTERED PROFESSIONAL ENGINEER
DATE: 5/23/2019

DOWNTOWN WATERFRONT IMPROVEMENTS PHASE I
CBJ CONTRACT NO. DH19-014

SHEET TITLE: **ELECTRICAL RACK ELEVATIONS**

PND PROJECT NO.: 182045 C.A.N. NO.: AECC250

E2.03

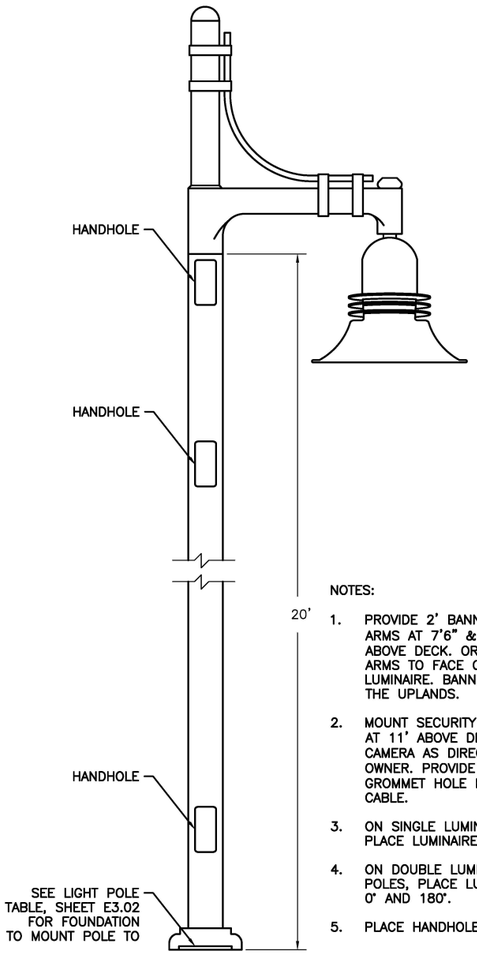

NOTES:

1. PROVIDE 2' BANNER ARMS. ARMS AT 7'6" & 12'6" ABOVE DECK. ORIENT BANNER ARMS TO FACE OPPOSITE LUMINAIRE. BANNERS FACE THE UPLANDS.
2. MOUNT SECURITY CAMERAS AT 11' ABOVE DECK. ORIENT CAMERA AS DIRECTED BY OWNER. PROVIDE 3/4" GROMMET HOLE FOR CAMERA CABLE.
3. ON SINGLE LUMINAIRE POLES, PLACE LUMINAIRE AT 0°.
4. ON DOUBLE LUMINAIRE POLES, PLACE LUMINAIRES AT 0° AND 180°.
5. PLACE HANDHOLES AT 90°.

① TYPE "A" & "B" LUMINAIRE ELEVATION
NO SCALE

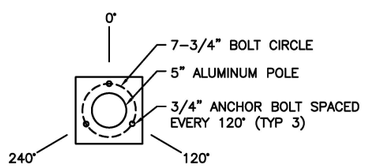

② BOLT CIRCLE DETAIL
NO SCALE

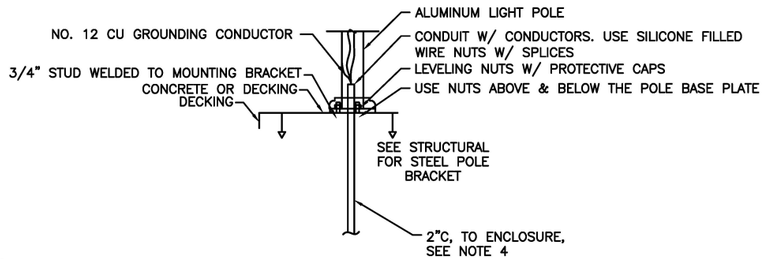

NOTES:

1. COORDINATE WITH OTHER TRADES TO ENSURE THAT THE STUD PATTERN ON THE MOUNTING BRACKET MATCHES LIGHT POLE BASE BOLT HOLES.
2. SPLICE CONDUCTORS INSIDE POLE ADJACENT TO HANDHOLE IF THERE IS ROOM. USE COMPRESSION SPLICES WITH HEAT SHRINK. IF THERE IS NO ROOM IN POLE, SPLICE IN J-BOX.
3. LIGHT POLE MOUNTING BRACKETS CHANGE BASED UPON WHERE ON THE STRINGER THEY ARE LOCATED. COORDINATE WITH DOCK FABRICATOR, INSTALLER, AND GENERAL CONTRACTOR FOR THE LOCATION AND TYPE OF MOUNTING BRACKET TO USE FOR EACH POLE. THE TYPE OF MOUNTING BRACKET CHANGES BASED UPON THE DOCK STRUCTURE. SEE STRUCTURAL SHEET S1.05 FOR THE TYPES OF MOUNTING BRACKETS. SEE TABLE FOR SPECIFIC BRACKET TO BE USED.
4. MOUNT A 12" X 12" X 6" NEMA 4X STAINLESS STEEL ENCLOSURE TO A GLULAM STRINGER BELOW LIGHT POLE FOUNDATION. ROUTE 2" CONDUIT FROM ENCLOSURE UP TO CENTER OF LIGHT POLE.

③ STEEL BRACKET LIGHT POLE BASE DETAIL
NO SCALE

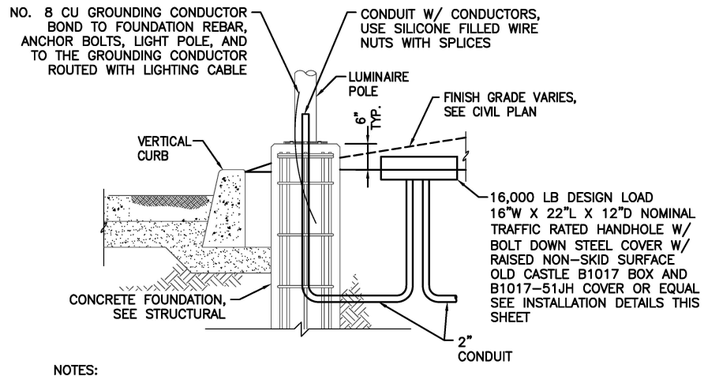

NOTES:

1. SEE CIVIL FOR DETAILS NOT CALLED OUT.
2. PROVIDE 3/4" ANCHOR BOLTS. 24" WITH LARGE WASHERS AT HEAD. ASTM A-36 WITH MINIMUM YIELD STRENGTH OF 36 KIPS. MOUNT POLE TO LEVELING NUTS ON ANCHOR BOLTS.

④ CONCRETE FOUNDATION LIGHT POLE BASE DETAIL
NO SCALE

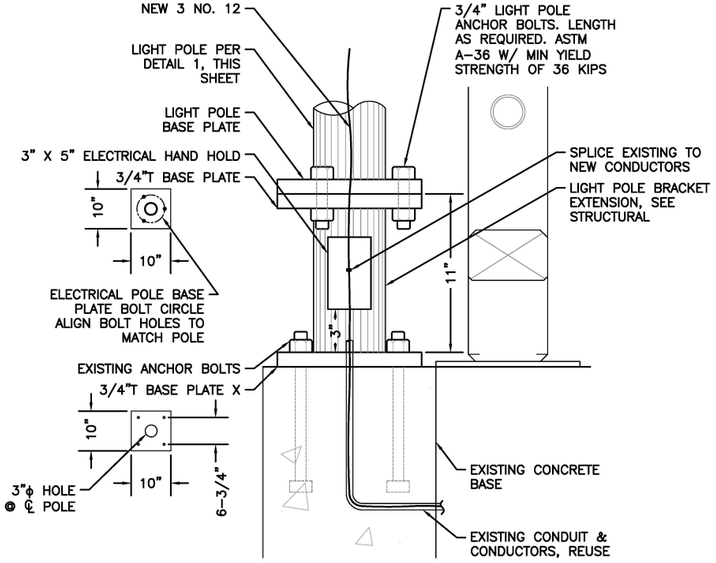

⑤ BRACKET EXTENSION LIGHT POLE BASE DETAIL
NOTE: USE FOR LIGHT POLE NOS. L-17 TO L-29
NO SCALE

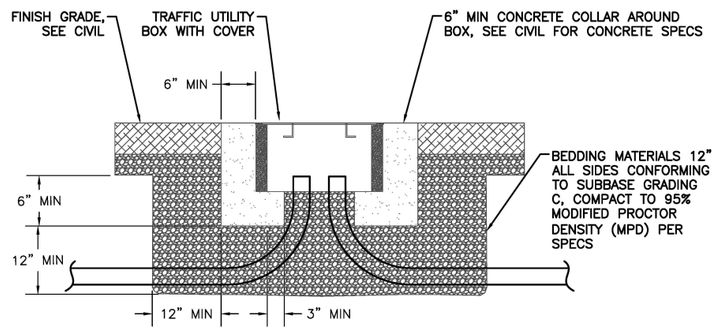

⑥ HANDHOLE DETAIL
NO SCALE

CITY & BOROUGH OF JUNEAU DOCKS & HARBORS

MORRIS ENGINEERING GROUP INC
2375 Jordan Avenue #7, Juneau, AK 99801
Phone: 907-789-3350, License: AECL1010

REVISIONS

REV.	DATE	DESCRIPTION	DWN.	CKD.	APP.

PND ENGINEERS, INC.
9360 Glacier Highway Ste 100
Juneau, Alaska 99801
Phone: 907-586-2093
Fax: 907-586-2099
www.pndengineers.com

DESIGN: MGM CHECKED: MGM
DRAWN: JRW APPROVED: MGM
SCALE:

STATE OF ALASKA 49TH
May 23, 2019
Mark G. Morris
No. EE 8813
REGISTERED PROFESSIONAL ENGINEER
DATE: 5/23/2019

DOWNTOWN WATERFRONT IMPROVEMENTS PHASE I
CBJ CONTRACT NO. DH19-014

SHEET TITLE: **20' POLE DETAILS**

PND PROJECT NO.: 182045 C.A.N. NO.: AECC250

E3.01

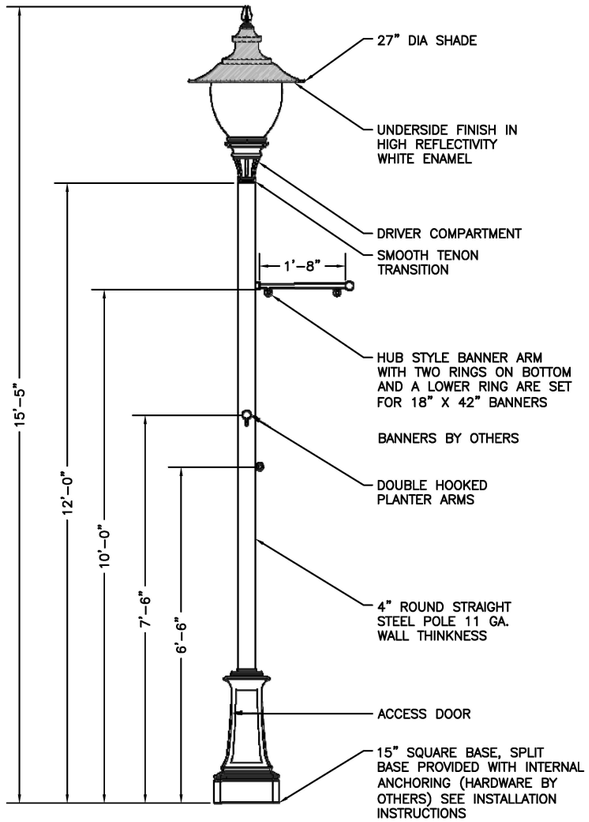

① TYPE "C" LUMINAIRE ELEVATION

4" 8" 16" 32"

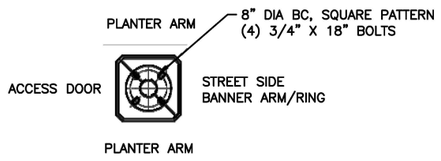

② BOLT CIRCLE DETAIL

4" 8" 16" 32"

LIGHT POLE TABLE

LIGHT POLE NO.	FOUNDATION TYPE (SEE STRUCTURAL)	FOUNDATION DESCRIPTION	REMARKS	BANNER ARMS
L–1	TYPE 6	CONCRETE FOUNDATION	SEE SHEET E3.01, DETAILS 1 & 4	NO
L–2	TYPE 4	CONCRETE FOUNDATION	SEE SHEET E3.01, DETAILS 1 & 4	NO
L–3	TYPE 4	CONCRETE FOUNDATION	SEE SHEET E3.01, DETAILS 1 & 4	NO
L–4	TYPE 5	STEEL BRACKET	SEE SHEET E3.01, DETAILS 1 & 3	NO
L–5	TYPE 3	STEEL BRACKET	SEE SHEET E3.01, DETAILS 1 & 3	YES
L–6	TYPE 3	STEEL BRACKET	SEE SHEET E3.01, DETAILS 1 & 3	YES
L–7	TYPE 3	STEEL BRACKET	SEE SHEET E3.01, DETAILS 1 & 3	YES
L–8	TYPE 3	STEEL BRACKET	SEE SHEET E3.01, DETAILS 1 & 3	YES
L–9	TYPE 3	STEEL BRACKET	SEE SHEET E3.01, DETAILS 1 & 3	YES
L–10	TYPE 3	STEEL BRACKET	SEE SHEET E3.01, DETAILS 1 & 3	YES
L–11	TYPE 1	STEEL BRACKET	SEE SHEET E3.01, DETAILS 1 & 3	NO
L–12	TYPE 1	STEEL BRACKET	SEE SHEET E3.01, DETAILS 1 & 3	NO
L–13	TYPE 1 SIM	STEEL BRACKET	SEE SHEET E3.01, DETAILS 1 & 3	NO
L–14	TYPE 7	CONCRETE FOUNDATION	SEE SHEET E3.01, DETAILS 1 & 4 **	NO
L–15	TYPE 7	CONCRETE FOUNDATION	SEE SHEET E3.01, DETAILS 1 & 4	NO
L–16	TYPE 6	CONCRETE FOUNDATION	SEE SHEET E3.01, DETAIL 4 & DETAIL 1, THIS SHEET	YES
L–17	TYPE 3	BRACKET EXTENSION	SEE SHEET E3.01, DETAILS 1 & 5	YES
L–18	TYPE 3	BRACKET EXTENSION	SEE SHEET E3.01, DETAILS 1 & 5	YES
L–19	TYPE 3	BRACKET EXTENSION	SEE SHEET E3.01, DETAILS 1 & 5	YES
L–20	TYPE 3	BRACKET EXTENSION	SEE SHEET E3.01, DETAILS 1 & 5	YES
L–21	TYPE 3	BRACKET EXTENSION	SEE SHEET E3.01, DETAILS 1 & 5	YES
L–22	TYPE 3	BRACKET EXTENSION	SEE SHEET E3.01, DETAILS 1 & 5	YES
L–23	TYPE 3	BRACKET EXTENSION	SEE SHEET E3.01, DETAILS 1 & 5	YES
L–24	TYPE 3	BRACKET EXTENSION	SEE SHEET E3.01, DETAILS 1 & 5	YES
L–25	TYPE 3	BRACKET EXTENSION	SEE SHEET E3.01, DETAILS 1 & 5	YES
L–26	TYPE 3	BRACKET EXTENSION	SEE SHEET E3.01, DETAILS 1 & 5	YES
L–27	TYPE 3	BRACKET EXTENSION	SEE SHEET E3.01, DETAILS 1 & 5	YES
L–28	TYPE 3	BRACKET EXTENSION	SEE SHEET E3.01, DETAILS 1 & 5	YES
L–29	TYPE 3	BRACKET EXTENSION	SEE SHEET E3.01, DETAILS 1 & 5	YES

** NO HANDHOLE

LUMINAIRE SCHEDULE

TYPE	DESCRIPTION	MANUFACTURER	LAMPS	REMARKS
A	20' LIGHT POLE, ARM, & LUMINAIRE WITH FLUTED FULL CUTOFF SHADE, TYPE III DISTRIBUTION, BLACK	COOPER INVUE EPIC MEDIUM MODERN SERIES EMM–E04–LED–E1–T3–SR–FL–BK–8030 W/VA6110–BK (SINGLE ARM) OR VA6117–BK (DOUBLE ARM) AND ARX–ST12–NGN4 ALUMINUM POLE	LED, 3,000K, 80 CRI, 11,700 LUMENS	NO SUBSTITUTIONS, PROVIDE WITH 120–277V DRIVER. MOUNT SECURITY CAMERAS TO POLE AT 11' AFG, USE CAMERA POLE MOUNT BRACKET WITH STAINLESS STEEL BAND, SEE DETAIL. MOUNT BANNER ARMS AT 12'6" & 7'6", SEE DETAILS.
B	20' LIGHT POLE, ARM, & LUMINAIRE WITH FLUTED FULL CUTOFF SHADE, TYPE IV DISTRIBUTION, BLACK	COOPER INVUE EPIC MEDIUM MODERN SERIES EMM–E04–LED–E1–T4–SR–FL–BK–8030 W/VA6110–BK (SINGLE ARM) OR VA6117–BK (DOUBLE ARM) AND ARX–ST12–NGN4 ALUMINUM POLE	LED, 3,000K, 80 CRI, 11,500 LUMENS	NO SUBSTITUTIONS, PROVIDE WITH 120–277V DRIVER. MOUNT SECURITY CAMERAS TO POLE AT 11' AFG, USE CAMERA POLE MOUNT BRACKET WITH STAINLESS STEEL BAND, SEE DETAIL. MOUNT BANNER ARMS AT 12'6" & 7'6", SEE DETAILS.
C	12' LIGHT POLE W/ POLYCARBONATE ACORN STYLE LED, TYPE III DISTRIBUTOR	STERNBERG LIGHTING M960SRLED–4ARC45T4–MDL03–P/BKT LITE	LED, 3,500K, 5,500 LUMENS, 64 WATTS	MOUNT TO CONCRETE BASE WITH PLANTER ARMS & BANNER ARM PER DETAIL 3, SHEET E3.02
D	TRADITIONAL WALL MOUNTED ARM WITH 45° STAP & LUMINAIRE WITH FLUTED FULL CUTOFF SHADE, TYPE III DISTRIBUTION, BLACK	COOPER INVUE EPIC MEDIUM MODERN SERIES EMM–E04–LED–E1–T3–SR–FL–BK–8030 W/VA6153–BK WITH TRADITIONAL WALL MOUNT ARM WITH 45° STRAP	LED, 3,000K, 80 CRI, 11,500 LUMENS	NO SUBSTITUTIONS. 120/277V DRIVER, WALL MOUNT TO PARKING GARAGE STRUCTURE.
F	1–3/4" DOWNLIGHT WITH ROUND ACRYLIC ACCESSORY. 1.31" X 2.8" DIAMETER TRIM, FROSTED ACRYLIC INSIDE, POLISHED OUTSIDE	CALCULITE FRAME: C2L–09–DL–935–R–Z10U DECORATIVE ELEMENT: D2L–R02	LED, 3,500K 900 LUMENS, 90 CRI	120–277V DRIVER, COORDINATE WITH SOFFIT INSTALLATION FOR CUTTING HOLES IN SOFFIT AND FLUSH MOUNTING. VERIFY CORRECT PARTS ARE BID AND ORDERED FOR A FLUSH INSTALLATION.

CITY & BOROUGH OF JUNEAU DOCKS & HARBORS

MORRIS ENGINEERING GROUP INC
2375 Jordan Avenue #7, Juneau, AK 99801
Phone: 907-789-3350, License: AECL1010

REVISIONS

REV.	DATE	DESCRIPTION	DWN.	CKD.	APP.

PND ENGINEERS, INC.
9360 Glacier Highway Ste 100
Juneau, Alaska 99801
Phone: 907-586-2093
Fax: 907-586-2099
www.pndengineers.com

DESIGN: MGM CHECKED: MGM
DRAWN: JRW APPROVED: MGM
SCALE:

STATE OF ALASKA 49TH
Mark G. Morris
May 23, 2019
No. EE 8613
REGISTERED PROFESSIONAL ENGINEER
DATE: 5/23/2019

DOWNTOWN WATERFRONT IMPROVEMENTS PHASE I
CBJ CONTRACT NO. DH19-014

SHEET TITLE:
12' POLE DETAILS, LIGHT POLE TABLE & LUMINAIRE SCHEDULE

PND PROJECT NO.: 182045 C.A.N. NO.: AECC250

E3.02

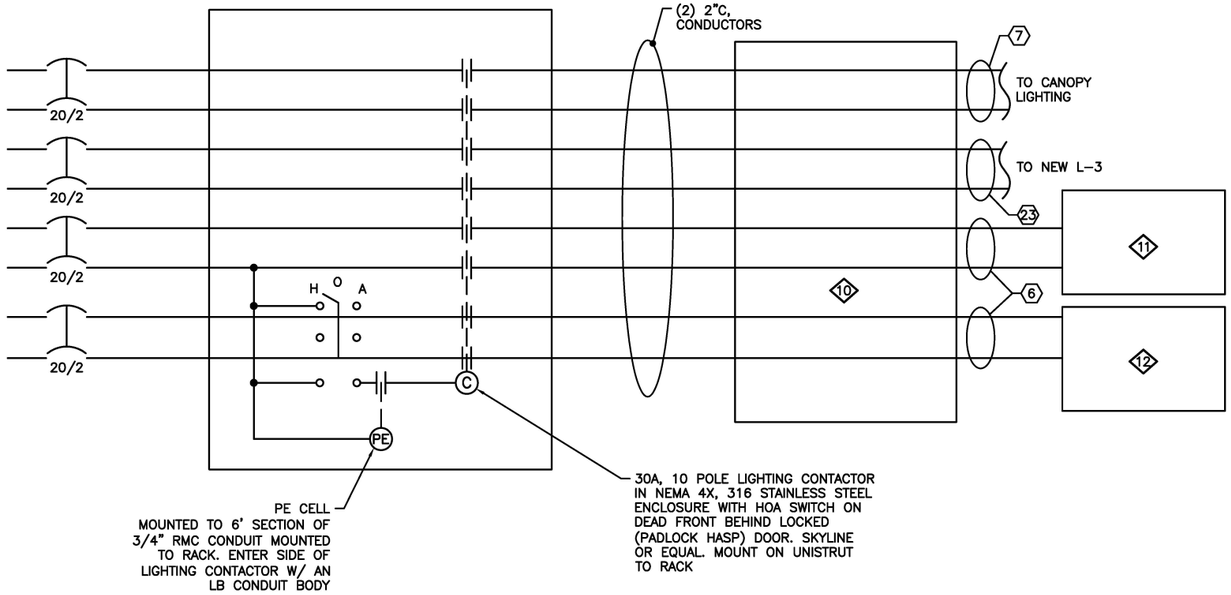

1 SITE LIGHTING CONTROL SCHEMATIC
NOT TO SCALE

NOTES:

1. SEE SHEET E1.02 FOR ⟨#⟩
2. SEE EQUIPMENT SCHEDULE, SHEET E2.02 FOR ⟨#⟩ EQUIPMENT NUMBERS.

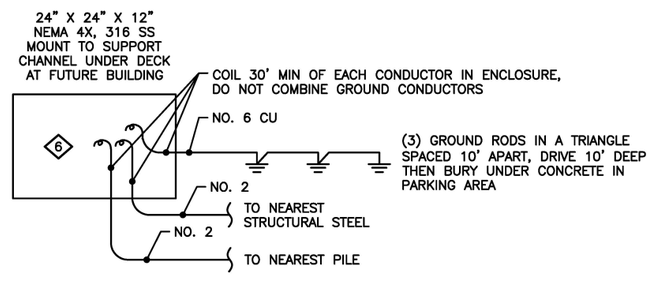

2 FUTURE BUILDING POWER SINGLE LINE DIAGRAM
NOT TO SCALE

REVISIONS

REV.	DATE	DESCRIPTION	DWN.	CKD.	APP.

CITY & BOROUGH OF JUNEAU DOCKS & HARBORS
MORRIS ENGINEERING GROUP INC
2375 Jordan Avenue #7, Juneau, AK 99801
Phone: 907-789-3350, License: AECL1010
PND ENGINEERS, INC.
9360 Glacier Highway Ste 100
Juneau, Alaska 99801
Phone: 907-586-2093
Fax: 907-586-2099
www.pndengineers.com

DESIGN: MGM CHECKED: MGM
DRAWN: JRW APPROVED: MGM
SCALE: NTS
DATE: 5/23/2019

STATE OF ALASKA 49TH Mark G. Morris May 23, 2019 No. EE 8813 REGISTERED PROFESSIONAL ENGINEER

DOWNTOWN WATERFRONT IMPROVEMENTS PHASE I
CBJ CONTRACT NO. DH19-014

SHEET TITLE: LTG CONTROL SCHEMATIC & FUTURE POWER SINGLE LINE

PND PROJECT NO.: 182045 C.A.N. NO.: AECC250

E3.03

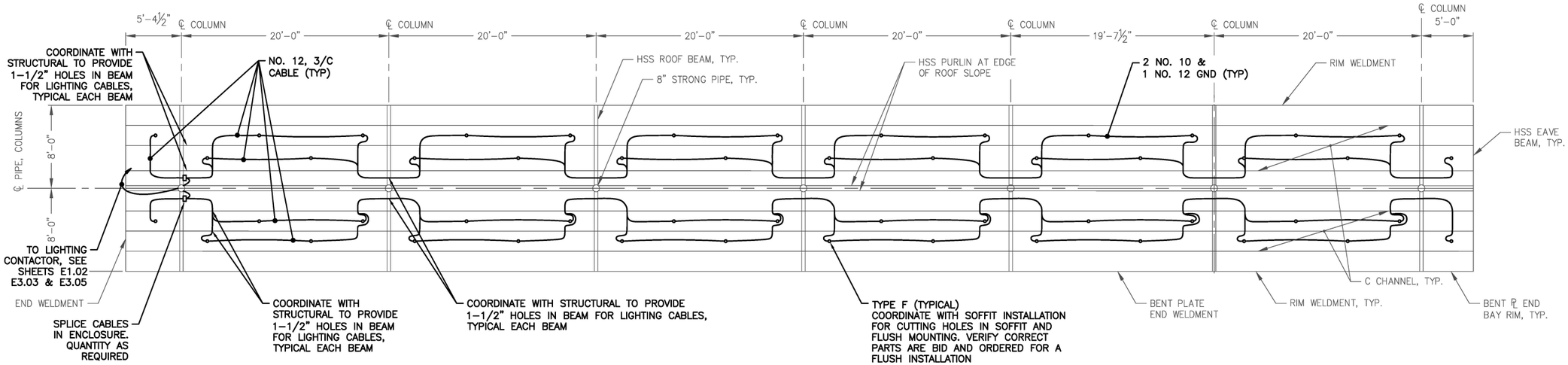

NOTE:

1. ROUTE CONDUIT UNDER DECK, STUB UP INTO COLUMN. SPLICE TO (2) NO. 12, 3/C TYPE 500W OR G-GC CABLE AT HANDHOLE. SEE STRUCTURAL DRAWINGS FOR CANOPY.

① PARKING CANOPY PLAN - ELECTRICAL

30" 5' 10'

CITY & BOROUGH OF JUNEAU DOCKS & HARBORS

MORRIS ENGINEERING GROUP INC
2375 Jordan Avenue #7, Juneau, AK 99801
Phone: 907-789-3350, License: AECL1010

REVISIONS

REV.	DATE	DESCRIPTION	DWN.	CKD.	APP.

PND ENGINEERS, INC.
9360 Glacier Highway Ste 100
Juneau, Alaska 99801
Phone: 907-586-2093
Fax: 907-586-2099
www.pndengineers.com

DESIGN: MGM CHECKED: MGM
DRAWN: JRW APPROVED: MGM
SCALE:

STATE OF ALASKA 49TH
Mark G. Morris
May 23, 2019
No. EE 8813
REGISTERED PROFESSIONAL ENGINEER
DATE: 5/23/2019

DOWNTOWN WATERFRONT IMPROVEMENTS PHASE I
CBJ CONTRACT NO. DH19-014

SHEET TITLE: **PARKING CANOPY PLAN - ELECTRICAL**

PND PROJECT NO.: 182045 C.A.N. NO.: AECC250

E3.04

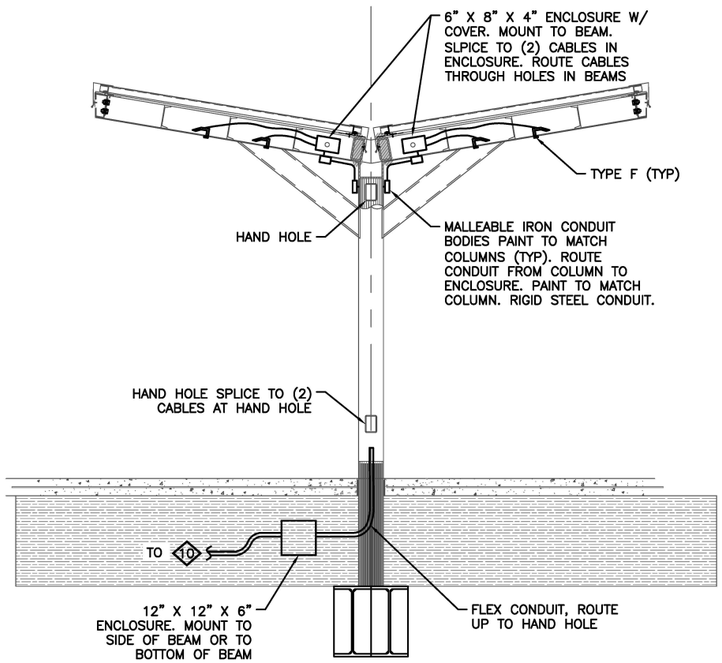

1 TYPICAL PARKING CANOPY SECTION
NOT TO SCALE

CITY & BOROUGH OF JUNEAU DOCKS & HARBORS

MORRIS ENGINEERING GROUP INC
2375 Jordan Avenue #7, Juneau, AK 99801
Phone: 907-789-3350, License: AECL1010

REVISIONS

REV.	DATE	DESCRIPTION	DWN.	CKD.	APP.

PND ENGINEERS, INC.
9360 Glacier Highway Ste 100
Juneau, Alaska 99801
Phone: 907-586-2093
Fax: 907-586-2099
www.pndengineers.com

DESIGN: MGM CHECKED: MGM
DRAWN: JRW APPROVED: MGM
SCALE:

STATE OF ALASKA 49TH
Mark G. Morris
May 23, 2019
No. EE 8613
REGISTERED PROFESSIONAL ENGINEER
DATE: 5/23/2019

DOWNTOWN WATERFRONT IMPROVEMENTS PHASE I
CBJ CONTRACT NO. DH19-014

SHEET TITLE:
PARKING CANOPY SECTIONS AND DETAILS - ELECTRICAL

PND PROJECT NO.: 182045 C.A.N. NO.: AECC250

E3.05

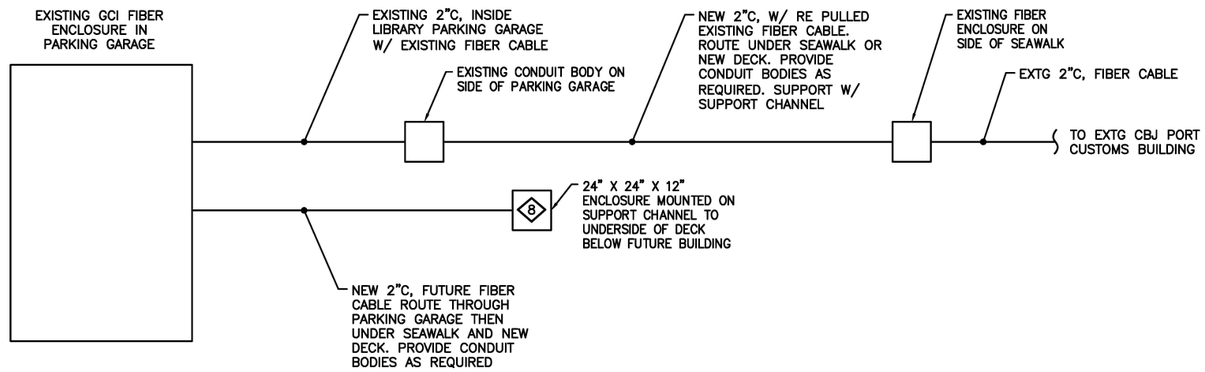

NOTES:

1. COORDINATE WITH GCI AND CBJ MIS TO DISCONNECT AND PULL OUT FIBER CABLE BACK TO EXISTING ENCLOSURE, THEN PULL BACK IN TO RECONNECT IN GCI ENCLOSURE. ARRANGE WITH GCI TO ALLOW CBJ TO USE SEVERAL STRANDS TO SET UP A CONNECTION TO THE FUTURE BUILDING.
2. SEE EQUIPMENT SCHEDULE, SHEET E2.02 FOR ⟨#⟩ EQUIPMENT NUMBERS.

① FIBER CABLE RISER DIAGRAM DIAGRAM

NOT TO SCALE

CITY & BOROUGH OF JUNEAU DOCKS & HARBORS

MORRIS ENGINEERING GROUP INC
2375 Jordan Avenue #7, Juneau, AK 99801
Phone: 907-789-3350, License: AECL1010

REVISIONS

REV.	DATE	DESCRIPTION	DWN.	CKD.	APP.

PND ENGINEERS, INC.
9360 Glacier Highway Ste 100
Juneau, Alaska 99801
Phone: 907-586-2093
Fax: 907-586-2099
www.pndengineers.com

DESIGN: MGM CHECKED: MGM
DRAWN: JRW APPROVED: MGM
SCALE: NTS

STATE OF ALASKA 49TH
Mark G. Morris
May 23, 2019
No. EE 8613
REGISTERED PROFESSIONAL ENGINEER
DATE: 5/23/2019

DOWNTOWN WATERFRONT IMPROVEMENTS PHASE I
CBJ CONTRACT NO. DH19-014

SHEET TITLE: **FIBER CABLE RISER DIAGRAM**

PND PROJECT NO.: 182045 C.A.N. NO.: AECC250

E4.01

NOTES:

1. SEE EQUIPMENT SCHEDULE, SHEET E2.02 FOR ◇# EQUIPMENT NUMBERS.

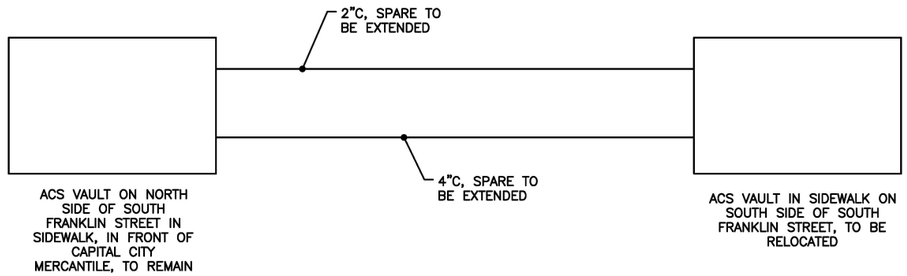

① EXISTING ACS TELEPHONE RISER DIAGRAM
NOT TO SCALE

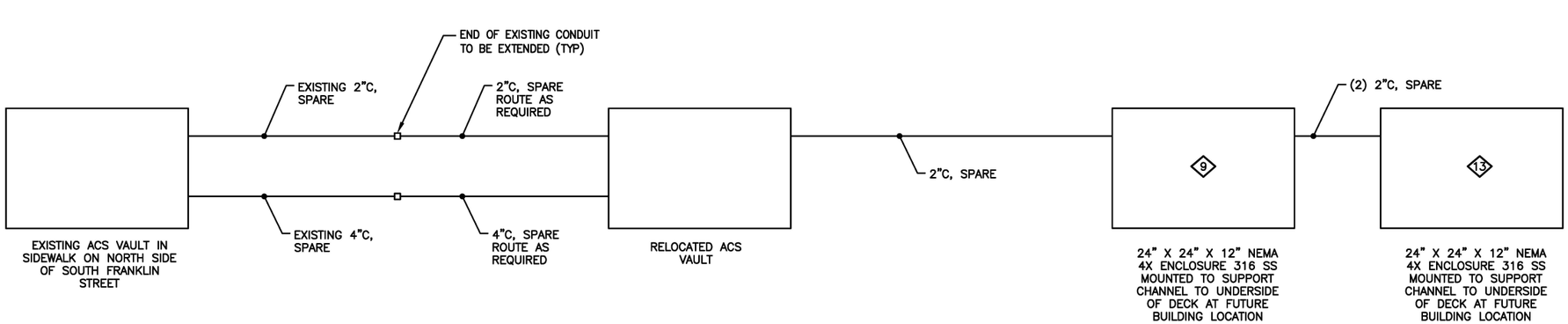

② NEW ACS TELEPHONE RISER DIAGRAM
NOT TO SCALE

CITY & BOROUGH OF JUNEAU DOCKS & HARBORS

MORRIS ENGINEERING GROUP INC
2375 Jordan Avenue #7, Juneau, AK 99801
Phone: 907-789-3350, License: AECL1010

REVISIONS

REV.	DATE	DESCRIPTION	DWN.	CKD.	APP.

PND ENGINEERS, INC.
9360 Glacier Highway Ste 100
Juneau, Alaska 99801
Phone: 907-586-2093
Fax: 907-586-2099
www.pndengineers.com

DESIGN: MGM CHECKED: MGM
DRAWN: JRW APPROVED: MGM
SCALE: NTS

STATE OF ALASKA 49TH
Mark G. Morris
May 23, 2019
No. EE 8613
REGISTERED PROFESSIONAL ENGINEER
DATE: 5/23/2019

DOWNTOWN WATERFRONT IMPROVEMENTS PHASE I
CBJ CONTRACT NO. DH19-014

SHEET TITLE:
EXISTING & NEW ACS RISER DIAGRAM

PND PROJECT NO.: 182045 C.A.N. NO.: AECC250

E4.02

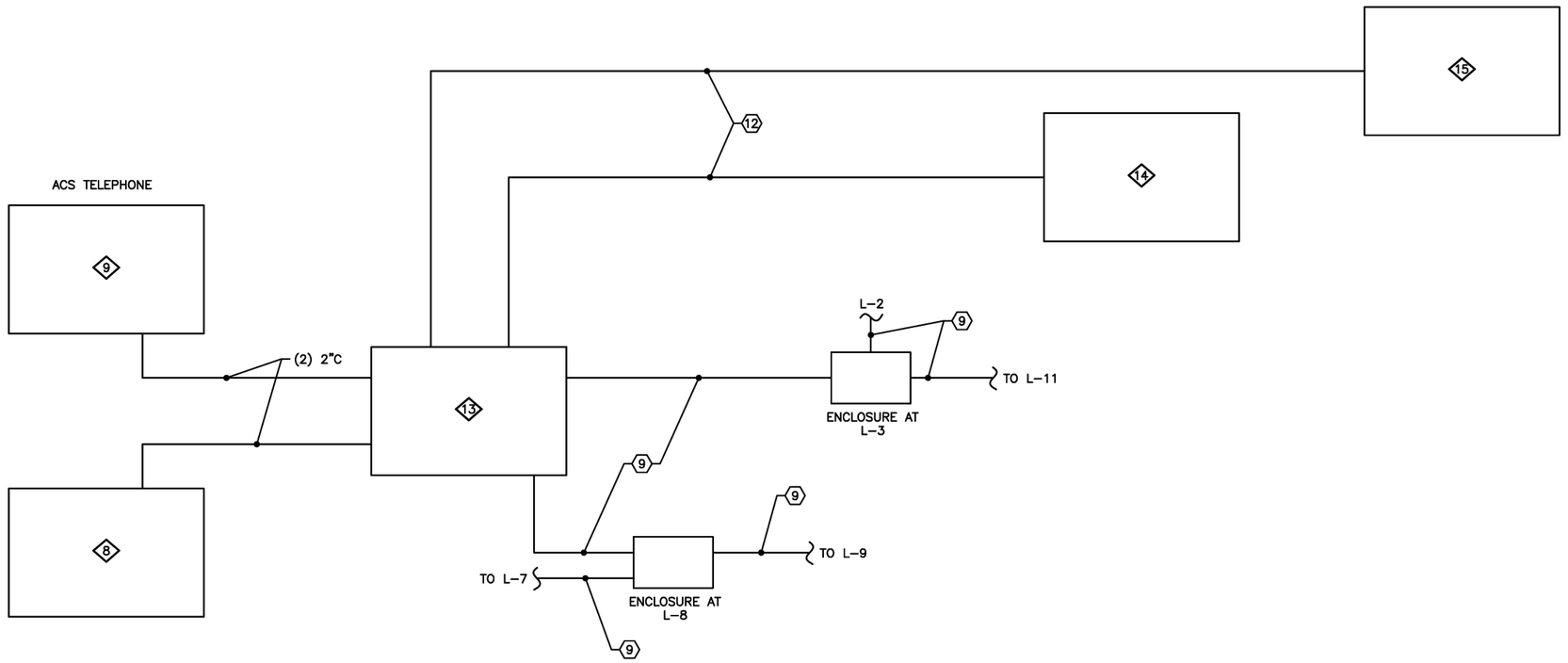

1 SCHEMATIC FOR CAMERAS
NOT TO SCALE

NOTES:

1. CAMERAS TO BE INSTALLED IN FUTURE. CONDUIT, ENCLOSURES, ETC. TO BE INSTALLED IN THIS PROJECT.
2. SEE SHEET E1.02 FOR KEY NOTES.
3. SEE EQUIPMENT SCHEDULE, SHEET E2.02 FOR (#) EQUIPMENT NUMBERS.

CITY & BOROUGH OF JUNEAU DOCKS & HARBORS

MORRIS ENGINEERING GROUP INC
2375 Jordan Avenue #7, Juneau, AK 99801
Phone: 907-789-3350, License: AECL1010

REVISIONS

REV.	DATE	DESCRIPTION	DWN.	CKD.	APP.

PND ENGINEERS, INC.
9360 Glacier Highway Ste 100
Juneau, Alaska 99801
Phone: 907-586-2093
Fax: 907-586-2099
www.pndengineers.com

DESIGN: MGM CHECKED: MGM
DRAWN: JRW APPROVED: MGM
SCALE:
DATE: 5/23/2019

STATE OF ALASKA 49TH
Mark G. Morris
May 23, 2019
No. EE 8613
REGISTERED PROFESSIONAL ENGINEER

DOWNTOWN WATERFRONT IMPROVEMENTS PHASE I
CBJ CONTRACT NO. DH19-014

SHEET TITLE:
CAMERA SCHEMATIC

PND PROJECT NO.: 182045 C.A.N. NO.: AECC250

E4.03

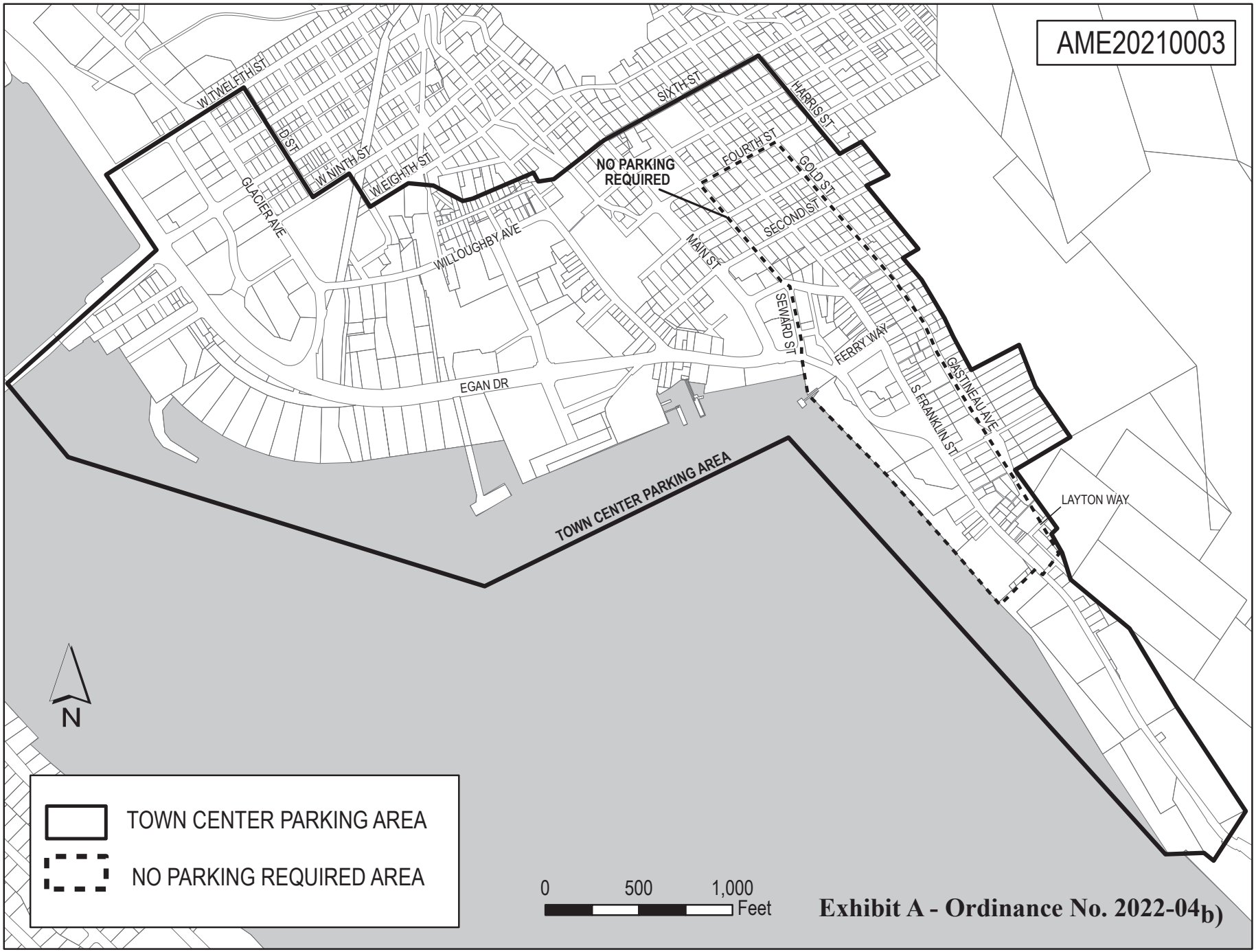

ArcMap Source: P:\quinn\Projects\LAW\ame20210003.mxd
Revised 4/12/2022

Attachment H – No Parking Required Area Map

CITY AND BOROUGH OF JUNEAU
ALASKA'S CAPITAL CITY
COMMUNITY DEVELOPMENT

Historic Resources Advisory Committee
(907) 586-0715
hrac@juneau.org
www.juneau.org/community-development/hrac
155 S. Seward Street • Juneau, AK 99801

February 5, 2026

Reuben Willis, Applicant
251 South Franklin Street, Juneau, Alaska 99801
Juneau Alaska 99801'

RE: proposed Alaska Fly & Dive project, 356 S. Franklin Street

Dear Reuben,

Thank you for bringing your project to our Historic Advisory Committee (HRAC) on February 4, 2026. We greatly appreciate your willingness to work with the Committee.

The proposed project meets historic guidelines and the Committee voted unanimously to recommend approval for this project. Your attention to detail and adherence to historical design features is impressive.

Again, thank you very much for bringing your project to our committee.

Regards,

Dorene Lorenz, Chair

CITY AND BOROUGH OF JUNEAU
ALASKA'S CAPITAL CITY
COMMUNITY DEVELOPMENT

(907) 586-0715
CDD_Admin@juneau.gov
www.juneau.org/community-development
155 Heritage Way • Juneau, AK 99801

COMMUNITY DEVELOPMENT DEPARTMENT - REQUEST FOR AGENCY COMMENT

DEPARTMENT: CDD – Building Division

STAFF PERSON/TITLE: Jeff Hedges, Building Code Official

DATE: 01/28/2026

APPLICANT: Reuben Willis

TYPE OF APPLICATION: Conditional Use Permit (USE2025 0013), Variance (VAR2025 0008), and Variance (VAR2025 0009)

PROJECT DESCRIPTION:

USE2025 0013: Conditional Use Permit to construct a 38,000-square-foot entertainment and retail building containing three theaters, a retail store, and associated office and support spaces.

VAR2025 0008: Variance to reduce the west side yard setback from 10 feet to 0 feet for a length of 60 feet.

VAR2025 0009: Variance to extend the Waterfront Commercial height limit from 35 feet to 38 feet, and from 35 feet to 54 feet for an area of 5,800 square-feet to accommodate a flying theater.

LEGAL DESCRIPTION: Archipelago Lot 1A

PARCEL NUMBER(S): 1C070K830022

PHYSICAL ADDRESS: 356 S. Franklin St.

SPECIFIC QUESTIONS FROM PLANNER:

N/A

AGENCY COMMENTS:

Since there is a ROW that is greater than 10' wide on the West side yard, the Building Division has no issues with this project.

CITY AND BOROUGH OF JUNEAU
ALASKA'S CAPITAL CITY
COMMUNITY DEVELOPMENT

(907) 586-0715
CDD_Admin@juneau.gov
www.juneau.org/community-development
155 Heritage Way • Juneau, AK 99801

COMMUNITY DEVELOPMENT DEPARTMENT - REQUEST FOR AGENCY COMMENT

DEPARTMENT: Fire

STAFF PERSON/TITLE: Theresa Ross, Fire Marshal

DATE: 01/28/2026

APPLICANT: Reuben Willis

TYPE OF APPLICATION: Conditional Use Permit (USE2025 0013), Variance (VAR2025 0008), and Variance (VAR2025 0009)

PROJECT DESCRIPTION:

USE2025 0013: Conditional Use Permit to construct a 38,000-square-foot entertainment and retail building containing three theaters, a retail store, and associated office and support spaces.

VAR2025 0008: Variance to reduce the west side yard setback from 10 feet to 0 feet for a length of 60 feet.

VAR2025 0009: Variance to extend the Waterfront Commercial height limit from 35 feet to 38 feet, and from 35 feet to 54 feet for an area of 5,800 square-feet to accommodate a flying theater.

LEGAL DESCRIPTION: Archipelago Lot 1A

PARCEL NUMBER(S): 1C070K830022

PHYSICAL ADDRESS: 356 S. Franklin St.

SPECIFIC QUESTIONS FROM PLANNER:

AGENCY COMMENTS:

Placement of the structure must meet 2024 IFC Appendix D, sections D104 & D105 should be addressed early on.

Invitation to Comment

On a proposal to be heard by the CBJ Planning Commission

Your Community, Your Voice

REVISED NOTICE

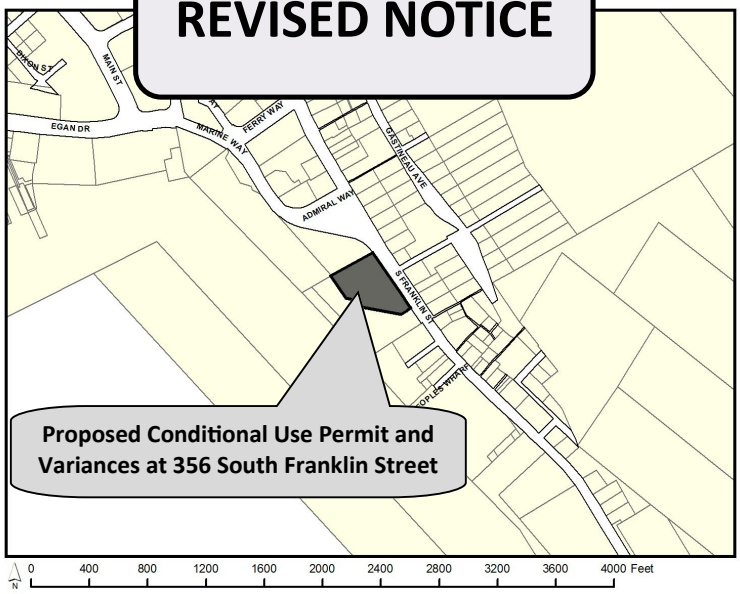

CITY AND BOROUGH OF JUNEAU
ALASKA'S CAPITAL CITY
COMMUNITY DEVELOPMENT
155 Heritage Way Juneau, Alaska 99801

TO

A Conditional Use Permit has been submitted for consideration and public hearing by the Planning Commission to **construct a 38,000-square foot entertainment and retail building** at **356 South Franklin Street** in a **Waterfront Commercial** zone. **THEN:**

Variance to reduce west side yard setback. **- AND -** **Variance** to extend Waterfront Commercial height limit.

PROJECT INFORMATION:
Project Information can be found at:
https://juneau.org/community-development/short-term-projects

PLANNING COMMISSION DOCUMENTS:
Staff Report expected to be posted **Tuesday, February 17, 2026** at
https://juneau.org/community-development/planning-commission
Find hearing results, meeting minutes, and more here, as well.

Now through Feb. 2	Feb. 3— noon, Feb. 20	HEARING DATE & TIME: 6:00 pm, Feb. 24, 2026	Feb. 25
Comments received during this period will be sent to the Planner, **Justin Smith,** to be included as an attachment in the staff report.	Comments received during this period will be sent to Commissioners to read in preparation for the hearing.	This meeting will be held in person and by remote participation. For remote participation: join the Webinar by visiting https://juneau.zoom.us/j/86847221296 and use the Webinar ID: 868 4722 1296 OR join by telephone, calling: 1-253-215-8782 and enter the Webinar ID (above). You may also participate in person in City Hall Assembly Chambers, 155 Heritage Way Juneau, Alaska.	The results of the hearing will be posted online.

FOR DETAILS OR QUESTIONS,

Phone: **(907)586-0753 ext. 4129**
Email: **pc_comments@juneau.gov or Justin.Smith@juneau.gov**
Mail: **Community Development, 155 Heritage Way, Juneau AK 99801**

Printed January 23, 2026

Case No.: USE2025 0013, VAR2025 0008, VAR2025 0009
Parcel No.: 1C070K830022
CBJ Parcel Viewer: http://epv.juneau.org



Attachment L – Public Notice Sign Photo

CITY AND BOROUGH OF JUNEAU
ALASKA'S CAPITAL CITY
COMMUNITY DEVELOPMENT

PLANNING COMMISSION STAFF REPORT
VARIANCE VAR2025 0008
HEARING DATE: FEBRUARY 24, 2026

(907) 586-0715
CDD_Admin@juneau.gov
www.juneau.org/community-development
155 Heritage Way • Juneau, AK 99801

DATE: February 12, 2026

TO: Erik Pedersen, Chair, Planning Commission

BY: Justin Smith, Planner

THROUGH: Jill Lawhorne, Director, AICP

PROPOSAL: Applicant requests a Non-Administrative Variance to reduce the west side yard setback from 10 feet to 0 feet for a length of 60 feet in a Waterfront Commercial zone.

STAFF RECOMMENDATION: Approval

KEY CONSIDERATIONS FOR REVIEW:

- The Waterfront Commercial zone requires 10-foot setbacks on all sides.
- The first 40 feet of the site lies within the Juneau Downtown Historic District, which encourages construction at the front and side property lines.
- The conflict between these guidelines creates a site-specific hardship if zoning setback requirements are applied.

GENERAL INFORMATION	
Property Owner	Archipelago Properties LLC
Applicant	Reuben Willis
Property Address	356 S Franklin St
Legal Description	ARCHIPELAGO LT 1A
Parcel Number	1C070K830022
Zoning	WC
Lot Size	33,875 square feet
Water/Sewer	CBJ/CBJ
Access	S. Franklin St.
Existing Land Use	Vacant
Associated Applications	USE2025 0013 and VAR2025 0009

ALTERNATIVE ACTIONS:

1. **Approve:** Approve the permit and adopt new findings for items 1-2 below that support the approval. Approval may require conditions.
2. **Continue:** To a future meeting date if determined that additional information or analysis is needed to make a decision, or if additional testimony is warranted.

ASSEMBLY ACTION REQUIRED:

Assembly action is not required for this permit.

STANDARD OF REVIEW:

- Quasi-judicial decision
- Requires five (5) affirmative votes for approval
- Code Provisions:
  - CBJ 49.20.240
  - CBJ 49.20.250(b)
  - CBJ 49.25.400
  - CBJ 49.80

The Commission shall hear and decide the case per CBJ 49.20.240. *The Planning Commission shall hear all Variance requests except Administrative Variances, and shall either approve, conditionally approve, modify or deny the request based on the criteria in section CBJ 49.20.250(b).*

SITE FEATURES AND ZONING

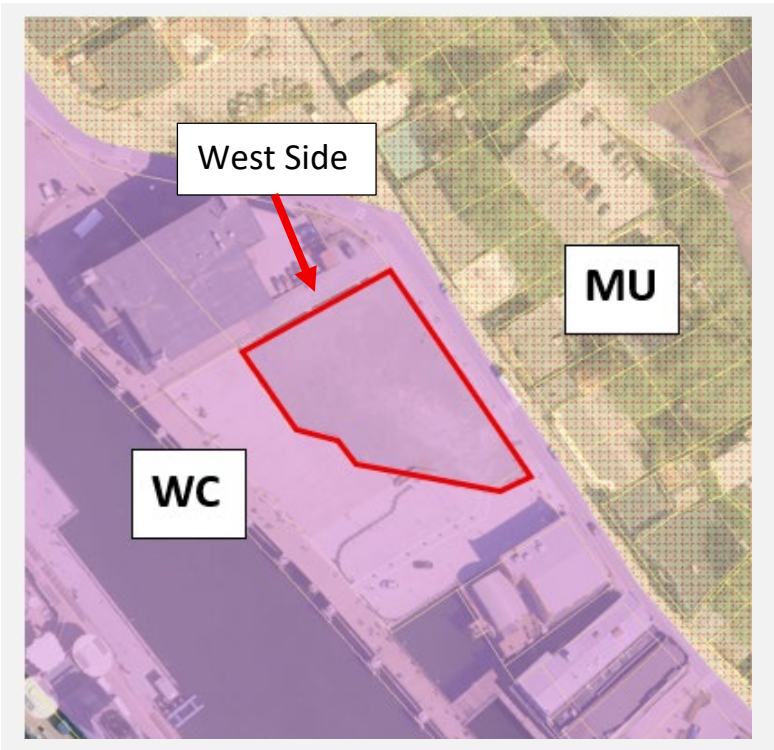

SURROUNDING ZONING AND LAND USES	
North (MU)	Commercial/Mixed Use
South (WC)	Seawalk
East (MU)	Commercial/Mixed Use
West (WC)	Downtown Library and Parking Garage

SITE FEATURES	
Anadromous	No
Flood Zone	Panel 02110C1567E: Zone VE
Hazard	No
Hillside	No
Wetlands	No
Parking District	No Parking Required Area
Historic District	Lot is partially within the Juneau Downtown Historic District
Overlay Districts	Cruise Ship Berthing and Lightering District Overlay

BACKGROUND INFORMATION

Project Description – The applicant requests a Non-Administrative Variance, VAR2025-0008, to reduce the west side yard setback from 10 feet to 0 feet for a length of 60 feet in a Waterfront Commercial zone (**Attachment A**). The proposed building is approximately 38,000 square feet and includes a lobby and an open-air plaza on the east side of the lot. The property is adjacent to the downtown library and parking garage, the seawalk, and the city-owned bus staging lot.

The proposed entertainment uses include a 60-person 4D theater, a 72-person flying theater, and three 20-person Ocean 360 rides. A ticket counter is proposed within the lobby to direct visitors throughout the building. A mezzanine level is proposed to accommodate back-of-house uses, including office and storage space.

The first 40 feet of the property lies within the Juneau Downtown Historic District, as shown in **Attachment B**. As a result, review of the proposal includes consideration of the Downtown Historic District Design Standards and Guidelines in the following section. The property is also within the No Parking Required Area (**Attachment H**).

The applicant has also requested a Conditional Use Permit, USE2025-0013, and another Variance, VAR2025-0009. USE2025-0013 is a request to construct a new entertainment and retail building containing three theater attractions, a retail space, and associated office and support areas. VAR2025-0009 is a request to increase the Waterfront Commercial height limit from 35 feet to 38 feet, and from 35 feet to 54 feet for a 5,800-square-foot portion of the building to accommodate the flying theater. The Director recommends approval of the conditional use permit and the other variance.

Background – The property is the former site of the Juneau Cold Storage building, which was destroyed by fire in the 1980s. Since that time, the property has remained largely vacant, with intermittent use for seasonal food and retail operations.

The current lot, Archipelago Lot 1A, was approved in May 2019 as Plat 2019-19 (**Attachment C**). A Conditional Use Permit, USE2019-0021, application for two (2) two-story commercial mixed-use buildings was approved by the Planning Commission on January 21, 2020 (**Attachment D**). A subsequent variance request, VAR2019-0005, to reduce the parking requirement to zero in association with USE2019-0021 was denied by the Board of Adjustment following hearings on January 28, 2020, and February 4, 2020 (**Attachment E**).

BLD2019-0145 was a grading permit issued on April 12, 2019, for site improvements (**Attachment F**). The permit was issued but was never finaled.

BLD2019-0321, titled Downtown Waterfront Improvements – Phase 1, was issued on July 12, 2019, and was managed by CBJ Docks and Harbors. The work included improvements in the surrounding area, including portions of the applicant's lot (**Attachment G**). This permit was also issued but never finaled.

The table below summarizes relevant history for the lot and proposed development.

Date	Item	Summary
2013	Juneau Downtown Historic District Map	Adopted in 2013, this map shows the Juneau Downtown Historic District. This district is subject to the Downtown Historic District Design Standards and Guidelines. (**Attachment B**)
2019	Plat 2019-19	The plat of the applicant's lot, Archipelago Lot 1A. (**Attachment C**)
2019	USE2019 0021	A conditional use permit for two (2) two-story commercial mixed-use buildings on Archipelago Lot 1A. The conditional use permit was approved by the Planning Commission on January 21, 2020. (**Attachment D**)
2019	VAR2019 0005	A variance connected to USE2019-0021 to reduce the parking requirement to zero. The variance was denied by the Board of Adjustment following hearings on January 28, 2020, and February 4, 2020. (**Attachment E**)
2019	BLD2019-0145	A grading permit issued on April 12, 2019, for site improvements. The permit was issued but never finaled. (**Attachment F**)
2019	BLD2019-0321	A building permit for Downtown Waterfront Improvements – Phase 1 issued on July 12, 2019. The project was managed by CBJ Docks and Harbors and included work in the surrounding area of Archipelago Lot 1A. (**Attachment G**)
2022	No Parking Required Area Map	Adopted in 2022, this map shows the Town Center Parking Area and the No Parking Required Area. Archipelago Lot 1A is within the No Parking Required Area. (**Attachment H**)
2026	HRAC Recommendation Letter	The Historic Resources Advisory Committee (HRAC) met on February 4, 2026, to discuss the proposed project. The committee voted unanimously to recommend approval for this project. (**Attachment I**)

ANALYSIS

Project Site – The Waterfront Commercial zone requires a 10-foot front yard setback, 10-foot side yard setbacks, and a 10-foot rear yard setback. The first 40 feet of the property lies within the Juneau Downtown Historic District and is subject to the Downtown Historic District Design Standards and Guidelines.

Setback Requirements – The applicant requests a Non-Administrative Variance to reduce the west side yard setback from 10 feet to 0 feet for a length of 60 feet.

Standard		Requirement	Existing	Requested	Code Reference
Setbacks	West Side Yard	10 feet	Vacant	0 feet	CBJ 49.25.400

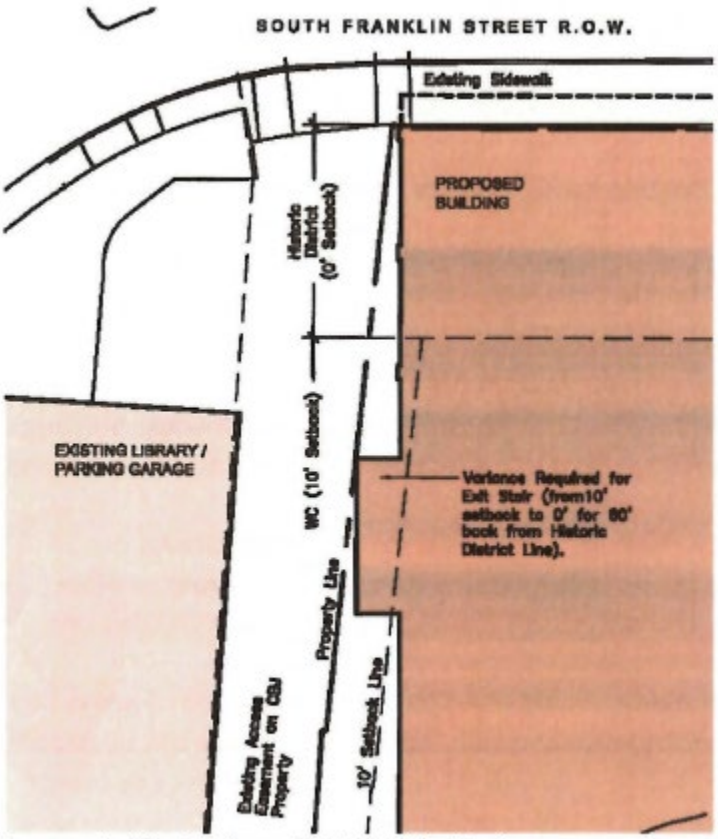

Image 1: Illustration of West Side Variance

VARIANCE STANDARDS

Pursuant to CBJ 49.20.200, a Non-Administrative Variance may be granted to provide an applicant relief from the requirements of this Title 49, the Land Use Code. A Variance is prohibited from varying any requirement or regulation of Title 49 concerning the use of land or structures, housing density, lot area, requirements in CBJ Chapter 49.35 (Public and Private Improvements), or requirements in CBJ Chapter 49.65 (Specified Use Provisions).

Per CBJ 49.20.250(b), a Non-Administrative Variance may be granted to provide an applicant relief from requirements of this title after the prescribed hearing and after the Planning Commission has determined that:

A. Enforcement of the ordinance would create an undue hardship resulting from the unusual or special conditions of the property.

Analysis: The Waterfront Commercial zone requires a 10-foot front yard setback, 10-foot side yard setbacks, and a 10-foot rear yard setback. The first 40 feet of the property lies within the Juneau Downtown Historic District and is subject to the Downtown Historic District Design Standards and Guidelines. CBJAC 08.460, Placement and Orientation, states that, "With the exception of small gaps in the building wall that occur for pedestrian or vehicular alleyways, most structures in the historic district are built to the full width of the parcel and to the front lot line. The resulting 'street wall' pattern shall be maintained in new development."

As applied to this property, the setback requirements of the Waterfront Commercial zone conflict with the Downtown Historic District Design Standards and Guidelines, which encourage construction at the front and side property lines. This conflict between applicable development standards constitutes an unusual condition specific to the site and creates a hardship if the zoning setback requirements are enforced.

Finding: Yes. This criterion has been met.

B. The unusual or special conditions of the property are not caused by the person seeking the Variance.

Analysis: The unusual conditions affecting the property result from the site's location within the Waterfront Commercial zone and the Juneau Downtown Historic District, which impose conflicting development standards.

Finding: Yes. This criterion has been met.

C. The grant of the Variance is not detrimental to public health, safety, or welfare.

Analysis: The reduction of the west side yard setback would not adversely affect public health or safety, as an existing access and utility easement along the west property line provides continued access in this area.

Finding: **Yes.** This criterion has been met.

D. The grant of the Variance is narrowly tailored to relieve the hardship.

Analysis: The requested west side yard setback variance is limited to the minimum extent necessary to address the site-specific hardship created by the conflicting development standards. The variance applies only to the portion of the property where relief is required and does not extend beyond what is needed to allow reasonable development of the site.

Finding: **Yes.** This criterion has been met.

Pursuant to CBJ 49.20.260, the Planning Commission may attach to a Non-Administrative Variance conditions regarding the location, character, and other features of the proposed structures or uses as it finds necessary to carry out the intent of this title and to protect the public interest.

Condition: None recommended.

AGENCY REVIEW

CDD conducted an agency review comment period between January 28, 2026, and February 20, 2026, and received the following responses, which are included in **Attachment J**.

Agency	Summary
CBJ Docks and Harbors	No comments received.
Capital City Fire & Rescue	Placement of the structure must meet 2024 IFC Appendix D, sections D104 & D105 should be addressed early on.
CDD – Building Division	Since there is a ROW that is greater than 10' wide on the West side yard, the Building Division has no issues with this project.
CBJ Engineering & Public Works	No comments received.
CBJ Parks & Recreation	No comments received.

PUBLIC COMMENTS

Public notice was mailed to property owners within 500 feet of the lot (**Attachment K**), a public notice sign was posted on-site two weeks prior to the hearing (**Attachment L**), and ads were placed in the Juneau Empire. Public comments received at time of writing this staff report and are summarized below.

Name	Summary
Gregory Adler	Sounds like a great idea for Juneau.

FINDINGS

1. ***Is the application for the requested Variance complete?***

   Analysis: No additional analysis required.

   Finding: Yes. The application for the requested Variance is complete.

2. ***Does the Variance as requested meet the criteria of CBJ Section 49.20.250(b)(1), Non-Administrative Variances?***

   Analysis: As discussed above, all criteria have been met.

   Finding: Yes. The requested Variance meets the criteria of CBJ Section 49.20.250(b)(1), Non-Administrative Variances.

STAFF RECOMMENDATION

Staff recommends that the Planning Commission adopt the Director's analysis and findings and grant the requested Non-Administrative Variance. The Non-Administrative Variance would allow for the reduction of the west side yard setback from 10 feet to 0 feet for a length of 60 feet in a Waterfront Commercial zone.

STAFF REPORT ATTACHMENTS

Item	Description
Attachment A	Application Packet
Attachment B	Juneau Downtown Historic District Map
Attachment C	Plat 2019-19
Attachment D	USE2019 0021
Attachment E	VAR2019 0005
Attachment F	BLD2019-0145
Attachment G	BLD2019-0321
Attachment H	No Parking Required Area Map
Attachment I	HRAC Recommendation Letter
Attachment J	Agency Comments
Attachment K	Abutters Notice
Attachment L	Public Notice Sign Photo

SETBACK VARIANCE

CITY AND BOROUGH OF JUNEAU
ALASKA'S CAPITAL CITY

DEVELOPMENT PERMIT APPLICATION

NOTE: Development Permit Application forms must accompany all other Community Development Department land use applications. This form and all documents associated with it are public record once submitted.

PROPERTY LOCATION

Physical Address
356 S. Franklin Street, Juneau, Alaska

Legal Description(s) (Subdivision, Survey, Block, Tract, Lot)
Archipelago Lot 1A

Parcel Number(s)
1C070-K83-0022

[X] This property is located in the downtown historic district
[ ] This property is located in a mapped hazard area, if so, which _____

LANDOWNER

Property Owner	Contact Person
Archipelago Properties, LLC	Erica Simpson
Mailing Address	**Phone Number(s)**
725 Broad St - Augusta, GA 30901	907.765.7601
E-mail Address	925.878.9424

LANDOWNER CONSENT

Required for Planning Permits, not needed on Building/ Engineering Permits.
Consent is required of all landowners. If submitted with the application, alternative written approval may be sufficient. Written approval must include the property location, landowner's printed name, signature, and the applicant's name.

To be completed by Applicant

I am (we are) the owner(s) of the property subject to this application and I (we) consent as follows:
A. This application for a land use or activity review for development on my (our) property is made with my complete understanding and permission.
B. I (we) grant permission for the City and Borough of Juneau officials/employees to inspect my property as needed for purposes of this application.

Archipelago Properties, LLC
Craig S. Mitchell — President
Landowner (Printed Name) — Title (e.g.: Landowner)

X _____ 8/18/2025
Landowner (Signature) — Date

_____
Landowner (Printed Name) — Title (e.g.: Landowner)

X _____ _____
Landowner (Signature) — Date

NOTICE: The City and Borough of Juneau staff may need access to the subject property during regular business hours. We will make every effort to contact you in advance, but may need to access the property in your absence and in accordance with the consent above. Also, members of the Planning Commission may visit the property before a scheduled public hearing date.

APPLICANT

If same as LANDOWNER, write "SAME"

Applicant (Printed Name)	Contact Person
Reuben Willis (signed sales agreement for lot, in due diligence period)	
Mailing Address	**Phone Number(s)**
2908 Jackson Road, Juneau, Alaska 99801	907.723.5771
E-mail Address	
reubenwillis@gmail.com, willis@gci.net	

X _____ 8/18/25
Applicant's Signature — Date of Application

---DEPARTMENT USE ONLY BELOW THIS LINE---

Intake Initials	
RW 12/15/25	
Case Number	**Date Received**
VAR25-008	12/15/25

INCOMPLETE APPLICATIONS WILL NOT BE ACCEPTED

For assistance filling out this form, contact the Permit Center at 586-0770.

CITY AND BOROUGH OF JUNEAU
ALASKA'S CAPITAL CITY
COMMUNITY DEVELOPMENT

VARIANCE APPLICATION

See reverse side for more information regarding the permitting process and the materials required for a complete application.

NOTE: Must be accompanied by a DEVELOPMENT PERMIT APPLICATION form.
Not to be used for Administrative Variances

To be completed by Applicant

PROJECT SUMMARY

A new entertainment and retail building. See attached narrative and CUP application for additional information.

SETBACK

VARIANCE REQUESTED (list CBJ Code section you are requesting a variance to)
See attached narrative.

Previous Variance Applications? YES X NO Date of Filing: _____

Previous Case Number(s): _____

Was the Variance Granted? YES NO

Building Permit related to this variance? YES NO

UTILITIES AVAILABLE: **WATER** X Public On Site **SEWER:** X Public On Site

ALL REQUIRED MATERIALS ATTACHED

Complete application per CBJ 49.65.210

Narrative including:

Any characteristics of land or building(s) or extraordinary situations that are unusual to this property or structure

Why a variance would be needed for this property regardless of the owner

What hardship would result if the variance is not granted

Site Plan

----------**DEPARTMENT USE ONLY BELOW THIS LINE**----------

VARIANCE FEES	Fees	Check No.	Receipt	Date
Application Fees	$ 400 00	$50 PUBLIC NOTICE SIGN, $100 DEPOSIT		
Adjustment	$ 150 00			
Total Fee	$ 550 00			

PAC25-50

This form and all documents associated with it are public record once submitted.

INCOMPLETE APPLICATIONS WILL NOT BE ACCEPTED

For assistance filling out this form, contact the Permit Center at 586-0770.

Case Number	Date Received
VAR 25-008	12/15/25

Variance Application Instructions

Variances are outlined in CBJ 49.20 article II

Application: An application for a Variance will not be accepted by the Community Development Department (CDD) until it is determined to be complete. The items needed for a complete application are:

1. **Forms:** Completed Variance Application and Development Permit Application forms.
2. **Fees:** The fee for a Variance Application is $400.00. If the application is in conjunction with a major development permit, the Variance fee will be reduced by 20 percent. Any development, work or use done without a permit issued will be subject to double fees. All fees are subject to change.
3. **Project Description:** A detailed letter or narrative describing the hardship that is the result of an unusual situation or physical feature affecting a specific parcel of land or structure. **Also include how the proposed project meets the variance criteria listed on the attached sheet.**
4. **Plans:** A site plan showing the following information:
    A. The location of existing and proposed structures (i.e. buildings, fences, signs, parking areas, etc.); and
    B. The location of existing physical features of the site (i.e. drainage, eagle trees, hazard areas, salmon streams, wetlands, etc.).

Document Format: All materials submitted as part of an application shall be submitted in either of the following formats:

1. Electronic copies in the following formats: .doc, .txt, .xls, .bmp, .pdf, .jpg, .gif, .xlm, .rtf (other formats may be preapproved by the Community Development Department).
2. Paper copies 11" X 17" or smaller (larger paper size may be preapproved by the Community Development Department).

Please consult with the Community Development Department to discuss whether additional information may be required for your application. The "Planner-On-Call" can be reached by contacting the Community Development Department at (907) 586-0715 or via email at Permits@juneau.org.

Application Review & Hearing Procedure: Once the application is determined to be complete, the Community Development Department will initiate the review and scheduling of the application. This process includes:

Review: As part of the review process the Community Development Department will evaluate the application for consistency with all applicable City & Borough of Juneau codes and adopted plans. Depending on unique characteristics of the Variance Application request the application may be required to be reviewed by other municipal boards and committees. During this review period, the Community Development Department will coordinate the review of this application by other agencies, as necessary. Review comments may require the applicant to provide additional information, clarification, or submit modifications/alterations for the proposed project.

Hearing: All Variance Applications must be reviewed by the Board of Adjustment. Once an application has been deemed complete and has been reviewed by all applicable parties the Community Development Department will schedule the requested permit for the next appropriate meeting.

Public Notice Responsibilities: As part of the Variance process, all requests must be given proper public notice as outlined in 49.20.230 which consists of the following:

Community Development Department will give notice of the pending Planning Commission meeting and its agenda in the local newspaper a minimum of 10-days prior to the meeting. Furthermore, the department will mail abutters notices to all property owners within 500-feet of the project site. A "Public Notice Sign" is required to be posted on the site by the Applicant and the Community Development Department will create the sign to be posted.

Variance Approval Criteria

A variance may be granted after the prescribed hearing and after the Board of Adjustment has determined that the following criteria are met. Include in your project narrative a detailed description about how your proposal meets each of the criteria listed below:

CBJ 49.20.250(b) Non-administrative variances. *(1)A variance may be granted to provide an applicant relief from requirements of this title after the prescribed hearing and after the board of adjustment has determined that:*

(A) Enforcement of the ordinance would create an undue hardship resulting from the unusual or special conditions of the property;

(B) The unusual or special conditions of the property are not caused by the person seeking the variance;

(C) The grant of the variance is not detrimental to public health, safety, or welfare; and

(D) The grant of the variance is narrowly tailored to relieve the hardship.

PLEASE NOTE: As provided by CBJ Land Use code section on Variances (CBJ 49.20.200), a variance may be granted to provide an applicant relief from the requirements of Title 49, the Land Use Code. A variance is prohibited from varying any requirement or regulation of this title concerning the use of land or structures, housing density, lot area, requirements in chapter 49.35, or requirements in chapter 49.65. Applications for prohibited variances shall not be accepted for filing or shall be rejected by the director.

INCOMPLETE APPLICATIONS WILL NOT BE ACCEPTED

Jensen Yorba Wall Inc.
522 West 10th Street, Juneau, Alaska 99801 907.586.1070 jensenyorbawall.com

Date: December 9, 2025
Re: Alaska Fly & Dive (JYW No. 25031)
Conditional Use Permit Application Variance Narrative

In order to be successful, this large and complicated project requires a few variances to the zoning dimensional standards. First, several setback variances are requested because the lot is within both the Waterfront Commercial property zoning as well as the Historic District Overlay Zone and there are some conflicts between the requirements of each zone. Second, some height restriction variances are requested to make the project economically viable.

Setback Variances. The WC zone requires 10' setbacks from all property lines (Table 49.25.400), while the Historic District Design Guidelines (04 CBJAC 080.460) require locating the front street wall at the sidewalk where feasible (7.1) and street facades to span lot widths (7.2) with an exception for access ways to side or rear entrances.

- *North (South Franklin Street) & West (Library) sides*. Building is located as near as possible to NW property corner. This will create a street wall along the 13' +/- wide South Franklin sidewalk, which seems to be the primary goal of the HDDG. It will also narrow the entrance to the "alley" between the building and the Library where there are no entrances or services. Because of compliance with the HDDG standards, outside of the HDDG zone, the building is closer than allowed to the west property line. ***West Side Variance required***: reduction of the west side WC side yard setback from 10' to 0' for a length of 60'.
- *East side*. Building is set back from the east property line by approximately 83'. This is because the building is not large enough to fill the entire 243' length of the lot and because of the desire to create a public Plaza. The Plaza was part of the original vision for the 2020 joint project with Docks and Harbors and was intended to serve as a link from the deckover to the crosswalk across South Franklin. It also allows gathering space for visitors in an emergency off of the narrow South Franklin Street sidewalks. ***East Side Variance required***: relaxation of the HDDG requirement for the building to span the lot width to allow for the public Plaza.
- *Justifications:*
  - Unusual characteristics contributing to variance need:
    - Two conflicting setback requirements in a single lot is unusual.
    - The public nature of both the South Franklin street wall and the east side Plaza is also very unusual.
    - The odd shape of the lot, particularly the narrow width on the east end, makes a full build-out of the lot problematic.
  - Variance needed regardless of owner: Any owner would need to deal with the conflicts between zoning districts and the need for some sort of public circulation area on the east side.
  - Hardship if variance not granted:

- Pushing the building east out of the west side WC setback would increase the width of the undesirable alley between the Library and the building and decrease the width of the east side Plaza, which is desired by both CBJ and the owner. It also will widen the street wall gap along the South Franklin side of the Library.
- Decreasing the size of the Plaza will limit future opportunities to offer open air food service here, decreasing the economic viability of the project.
- Requiring the building to be built to fill out the full 243' length of the property would greatly enlarge the size and cost of the project.

o The grant of the variances is not detrimental to public health, safety, or welfare:
- The decrease of the setback along the west doesn't impact public safety because of the access and utility easement along this property line allows access in this location.
- Granting of the easements allows for more public safety and welfare in the Plaza to the east.

o The grant of the variances is narrowly tailored to relieve the hardship: Both variance requests are limited to the specific property lines / building elevations where the variance is required.

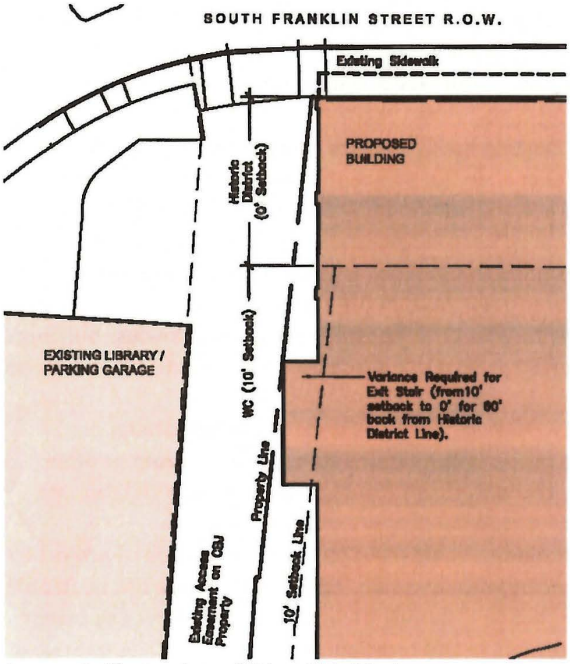

Image 1: Illustration of West Side Variance

Height Variances. The Historic District allows for a building height of 38', while the WC zone limits the height to 35'.

- *38' Height*. Building is 38' tall, typical, which allows for the stacking of the Ocean 360 rides on the 2nd Floor over the 4D Theater on the 1st floor with just inches to spare. ***Variance required***: raise the 35' height restriction in the WC zone to 38' for the entire lot, matching the Historic District height.
- *54' Height*. The large Flying Theater ride requires a screen height of just over 49'. Minimal structure for the long spans of the theater space requires a total height for this area of 54'. ***Variance required***:

raise the 35' height restriction in the WC zone to 54' for the approximately 5,800 sf Flying Theater and adjacent stairs, elevator, and mechanical equipment / enclosures.

- *Justifications:*
  - Unusual characteristics contributing to variance need (for 38' tall height variance):
    - Maximizing rides within the building requires stacking of the smaller 4D Theater under the Ocean 360 submarine rides. Even after lowering the floor of the 4D Theater 5' below the 1st Floor, a 38' height is still required to fit rides on both levels.
    - Two conflicting height requirements in a single lot is unusual.
    - The building is already allowed to be 38' tall along the historically-important South Franklin Street side.
    - Keeping the parapet height at a consistent 38' will be visually appealing along the public street and Plaza sides of the building.
  - Unusual characteristics contributing to variance need (for 54' tall height variance):
    - The flagship attraction for the planned new facility is the Flying Theater—a ride where visitors are swung out on seats that move along with a video on a large screen simulating flight over Alaskan landscapes. The ride depends on a tall curving screen to fullly immerse riders in the experience. The screen alone is over 49' tall, requiring at lease a 54' total building height to the roof above.
    - From eye-level a 38' tall building along South Franklin Street blocks the 54' height spaces entirely.
    - The building is located next to an existing building which is much taller. The top of the flat roof of the Library is 66', 12' taller than the maximum height we are requesting. The peaked corners of the Library are and additional 7'-6 and 11'-6" higher than the flat Library roof.
    - The Theater spaces have been designed to not block any views to the Elizabeth Peratrovich mural on the Library or any windows in the Library.
    - The original use of the site was the Juneau Cold Storage—a large, windowless building. The design of the Flying Theater exterior recalls this historic building with tile details on regular vertical pilasters.
    - The site is not waterfront property. Although nothing is currently built there, eventually the Docks and Harbors property is intended to house a museum or other public building that would occupy the waterfront frontage between the Theater and the Seawalk / waterfront.
  - Variance needed regardless of owner: Any owner would need an exceptional type of project to make development of this expensive site economically viable. Obviously, no one has been able to figure out how to make this work in 3+ decades. Raising the height would allow any owner greater flexibility to develop a successful project in this location.
  - Hardship if variance not granted:
    - Decreasing the screen heights in any of the Theater spaces will greatly impact on the economic rationale for the project.
    - The floor of the 4D Theater has already been lowered 5' below the main 1st Floor. Lowering any of the spaces further will move the building into conflict with the FEMA requirements and/or require every expensive waterproofing and other issues.
    - All projecting statues, signage, etc above the parapet level have already been eliminated. The structure between the floors and at the roof has been thinned beyond what is typical and normally economical. Parapet heights have been reduced as far as possible. Any further reduction in the height of the building is not possible without serious impacts to or elimination of Theater spaces.

- The grant of the variance is not detrimental to public health, safety, or welfare:
  - The increase to 38' or 54' building heights will not be visible to pedestrians on South Franklin Street, nor will it block sunlight to the street since the 38' height is already allowed along this property line.
  - The 54' Theater height will not block light or any water views for any windows in the staff or public areas of the Library.
  - The 54' tall Theater will not block sunlight to the Peratrovich Plaza, which located to the south and towards the water.
  - Public safety for building occupants is not impacted by the increase in height, since the building will need to comply with all building codes.
- The grant of the variance is narrowly tailored to relieve the hardship: Both variance requests are limited to the specific rooms and building elements where the variance is required.

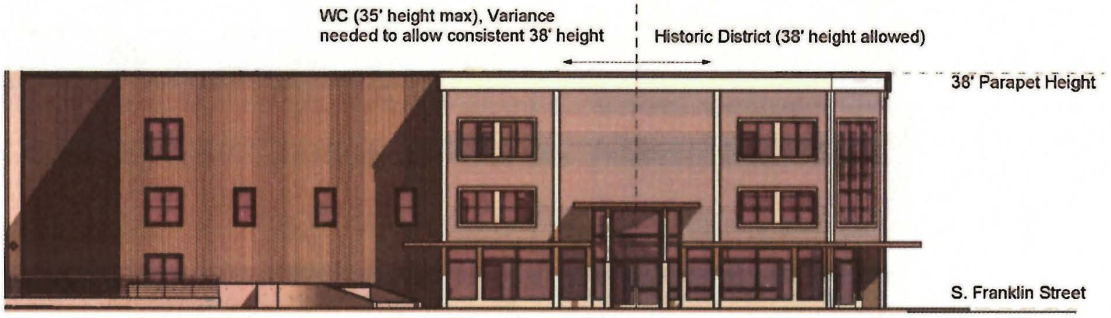

Image 2: East Elevation, showing 38' Height Variance

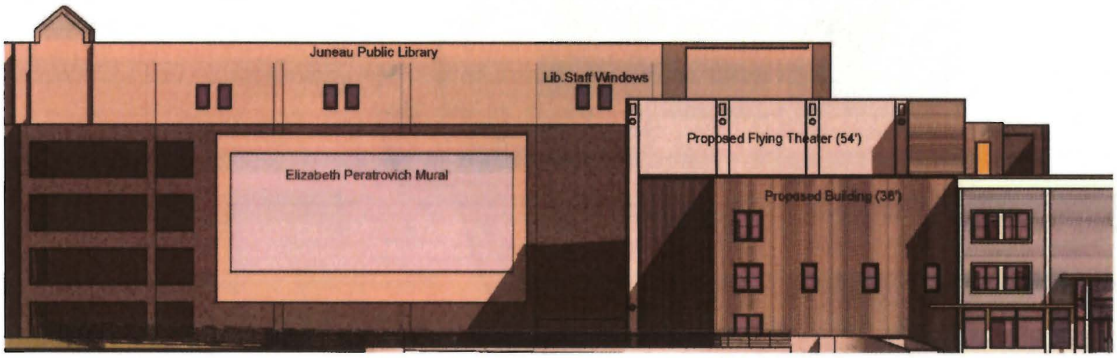

Image 3: East Elevation showing proposed building in relation to Library for Theater 54' Height Variance

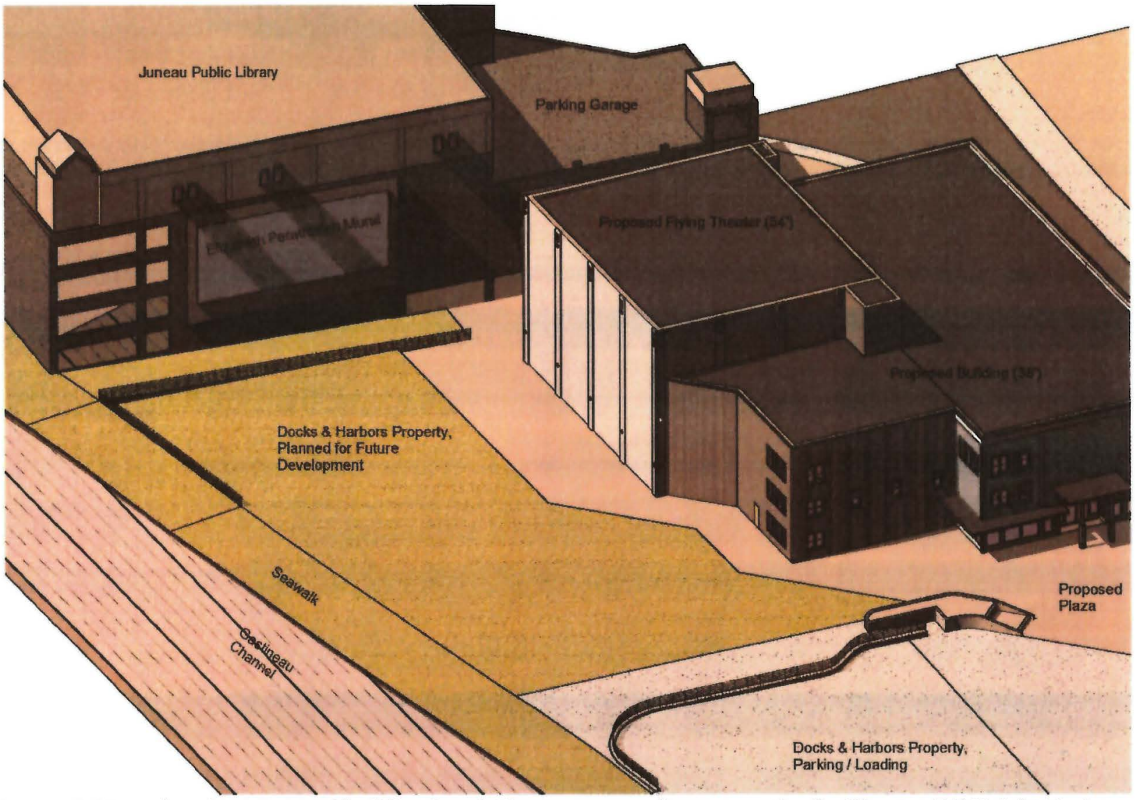

Image 4: View showing proposed building in relation to surrounding properties for Theater 54' Height Variance

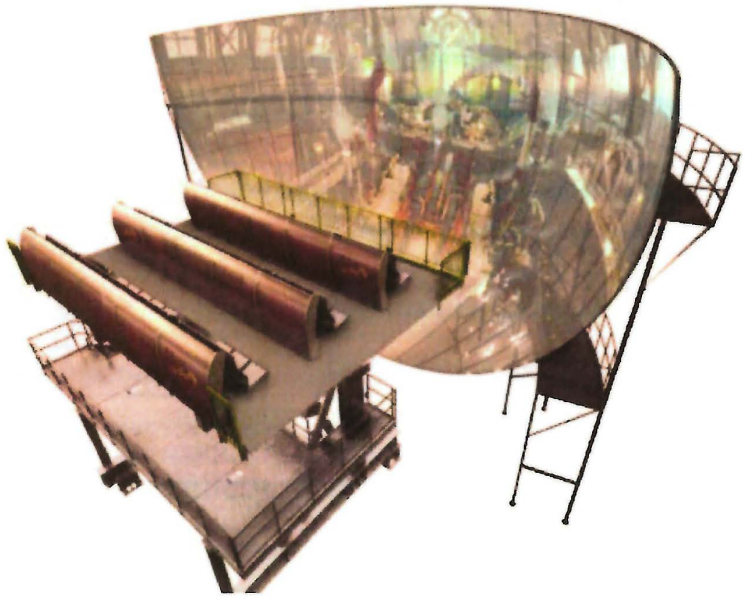

Image 5: Flying Theater Ride with 49' tall Screen for Theater 54' Height Variance



Image 6: Historic Photo of Juneau Cold Storage in location of proposed building

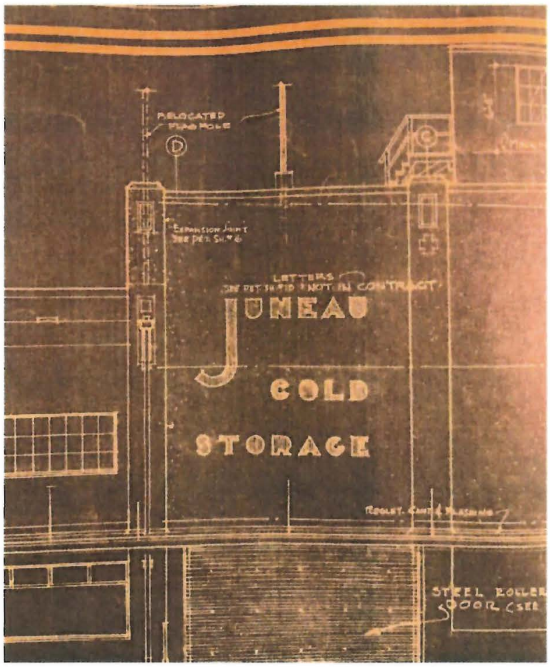

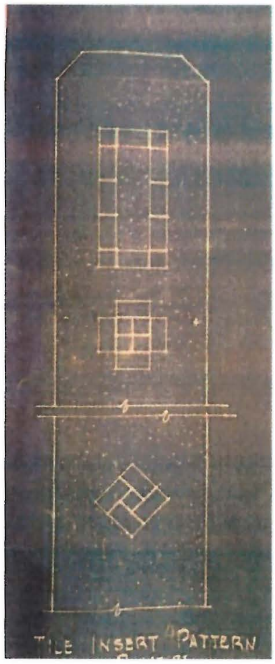

Images 7 & 8: 1944 Juneau Cold Storage blueprints used to develop details of proposed building

JUNEAU DOWNTOWN HISTORIC DISTRICT

Ordinance 2013-01

Adopted January 28th, 2013

NOTE:
The Historic District Boundary includes the street but not the building facades unless the boundary is shown inside the property line.

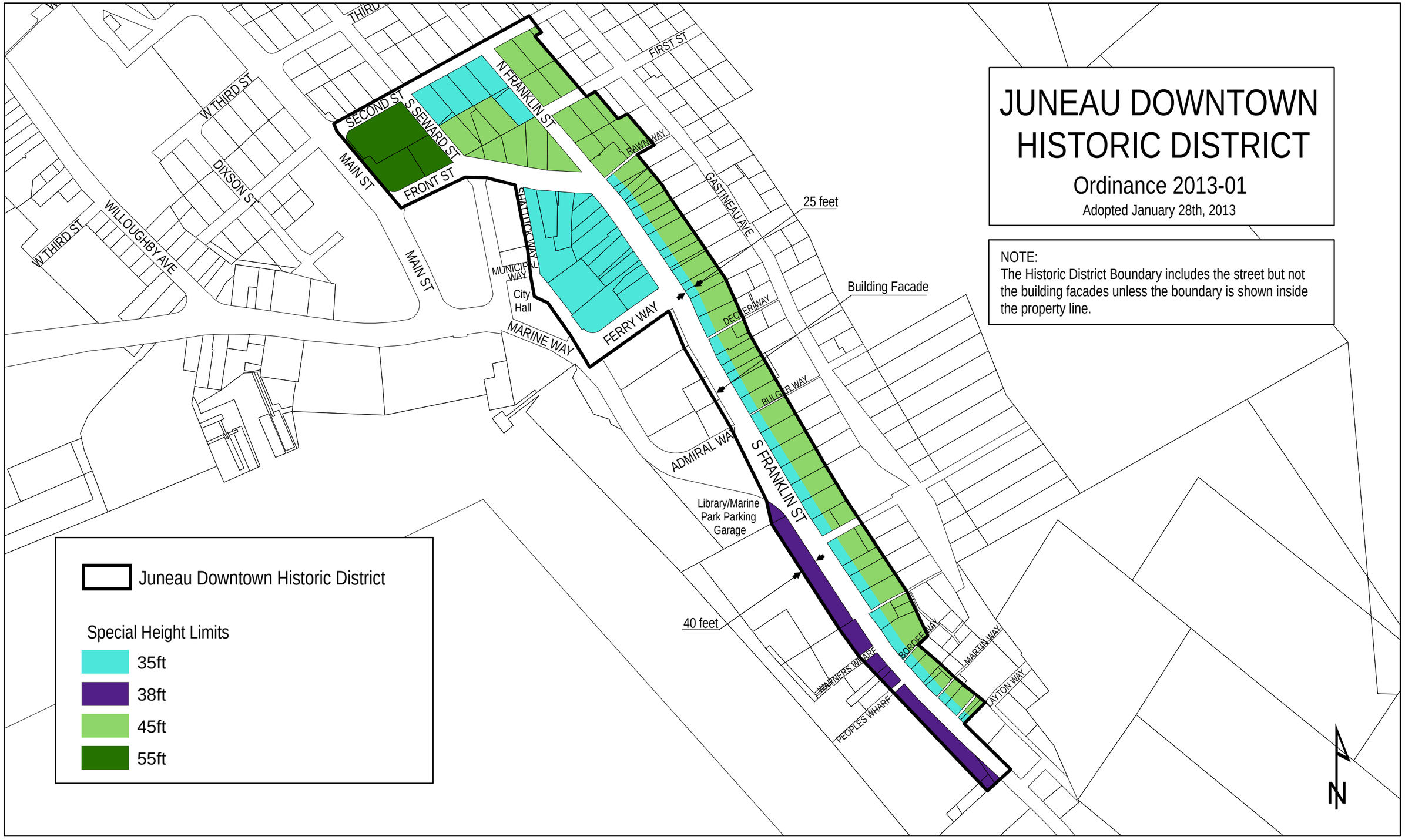

Project Source: F :\gis_work\Quinn\Projects\CDD\historic boundary adjustment.mxd

Attachment B – Juneau Downtown Historic District Map

OWNERSHIP CERTIFICATE

ARCHIPELAGO PROPERTIES, LLC HEREBY CERTIFY THAT THE CORPORATION IS THE OWNER OF LOTS 1 AND 2 AS SHOWN AND DESCRIBED HEREON AND THAT THE CORPORATION HEREBY ADOPTS THIS PLAT OF SUBDIVISION WITH FREE CONSENT, AND DEDICATES ALL STREETS, ALLEYS, WALKS, PARKS AND OTHER OPEN SPACE TO PUBLIC OR PRIVATE USE AS NOTED.

DATE 5-20-2019

BY _____

CRAIG MITCHELL
SENIOR VICE PRESIDENT
SHIVERS LENDING, LLC, SOLE MEMBER
ARCHIPELAGO PROPERTIES, LLC

NOTARY ACKNOWLEDGEMENT

STATE OF GEORGIA)
)S.S.
COUNTY OF RICHMOND)

THIS IS CERTIFY THAT ON THIS 20th DAY OF May 2019 BEFORE ME THE UNDERSIGNED, A NOTARY PUBLIC IN AND FOR THE STATE OF GEORGIA, DULY COMMISSIONED AND SWORN, PERSONALLY APPEARED Craig S. Mitchell TO ME KNOWN TO BE THE PERSON DESCRIBED IN AND WHO EXECUTED THE ABOVE AND FOREGOING INSTRUMENT, AND ACKNOWLEDGED TO ME THAT HE/SHE SIGNED AND SEALED THE SAME FREELY AND VOLUNTARILY FOR THE USES AND PURPOSES THEREIN MENTIONED, BEING FULLY AUTHORIZED TO DO SO. WITNESS MY HAND AND OFFICIAL SEAL THE DAY AND YEAR THIS CERTIFICATE FIRST ABOVE WRITTEN.

NOTARY PUBLIC FOR GEORGIA _____

MY COMMISSION EXPIRES 11-13-2020

Notary Public, Richmond County, Georgia, My Commission Expires November 13, 2020

OWNERSHIP CERTIFICATE

THE CITY AND BOROUGH OF JUNEAU, ALASKA (CBJ) HEREBY CERTIFY THAT CBJ IS THE OWNER OF LOTS 3 AND 4 AS SHOWN AND DESCRIBED HEREON AND THAT CBJ HEREBY ADOPTS THIS PLAT OF SUBDIVISION WITH FREE CONSENT, AND DEDICATES ALL STREETS, ALLEYS, WALKS, PARKS, AND OTHER OPEN SPACES TO PUBLIC OR PRIVATE USE AS NOTED.

DATE May 23 2019

BY _____

GREGORY CHANEY
LANDS AND RESOURCES MANAGER
CITY AND BOROUGH OF JUNEAU

NOTARY ACKNOWLEDGEMENT

STATE OF ALASKA)
)S.S.
FIRST JUDICIAL DISTRICT)

THIS IS CERTIFY THAT ON THIS 23rd DAY OF May 2019 BEFORE ME THE UNDERSIGNED, A NOTARY PUBLIC IN AND FOR THE STATE OF ALASKA, DULY COMMISSIONED AND SWORN, PERSONALLY APPEARED Gregory P. Chaney TO ME KNOWN TO BE THE PERSON DESCRIBED IN AND WHO EXECUTED THE ABOVE AND FOREGOING INSTRUMENT, AND ACKNOWLEDGED TO ME THAT HE/SHE SIGNED AND SEALED THE SAME FREELY AND VOLUNTARILY FOR THE USES AND PURPOSES THEREIN MENTIONED, BEING FULLY AUTHORIZED TO DO SO. WITNESS MY HAND AND OFFICIAL SEAL THE DAY AND YEAR THIS CERTIFICATE FIRST ABOVE WRITTEN.

STATE OF ALASKA
OFFICIAL SEAL
Susan B. Phillips
NOTARY PUBLIC
My Commission Expires 1/10/22

NOTARY PUBLIC FOR ALASKA Susan B. Phillips

MY COMMISSION EXPIRES 1/10/22

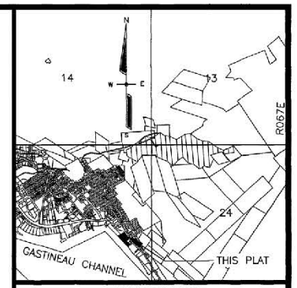

VICINITY MAP
SCALE 1" = 1/2 MILE

DETAIL A
SCALE 1" = 2'

DETAIL B
SCALE 1" = 2'

SOUTH FRANKLIN STREET R/W VARIES

BASIS OF BEARING S35°56'28"E 2546.74'

WARNERS WHARF 20' R/W

PEOPLES WHARF 10' R/W

LOT 1A
0.79 AC.
33875 S.F.

LOT 2A
0.87 AC.
38133 S.F.

LOT 4A
0.86 AC.
37378 S.F.

LOT 6 PLAT NO. 340

LOT 8 PLAT NO. 340

LOT 10 PLAT NO. 340

LOT 11 PLAT NO. 340

LOT 12 PLAT NO. 340

LOT 13A PLAT NO. 86-3

LOT 13C PLAT NO. 2003-8

LOT 2 PLAT NO. 340

LOT 1 PLAT NO. 340

FR. LOT 9B BK: 554 PG: 470

FR. LOT 9B MINER'S HALL TIDELAND LEASE JUNEAU DOC. 2006-006404-0

MINERS HALL BATTER PILE EASEMENT JUNEAU DOC. 2006-006405-0

TIMBERWOLF VENTURES TIDELAND LEASE JUNEAU DOC. 2015-002356-0

TRIPP CORP TIDELAND LEASE JUNEAU DOC. 2019-000849-0

PEOPLES WHARF TIDELAND LEASE JUNEAU DOC. 2007-003690-0

ACCESS AND UTILITY EASEMENT JUNEAU DOC. (CURRENTLY UNRECORDED)

CONSTRUCTION AND MAINTENANCE EASEMENT DEDICATED THIS PLAT

50.00' PUBLIC ACCESS ESMT VACATED THIS PLAT

VACATED PROPERTY LINE

FORMER LOT 1

FORMER LOT 2

FORMER LOT 3

FORMER LOT 4

GASTINEAU CHANNEL

SCALE
1"=30'
0 10 20 30 60 90
US FEET

LEGEND

- RECOVERED ALUMINUM MONUMENT
- RECOVERED ½" REBAR WITH PLASTIC CAP 7712-S
- COMPUTED CORNER, NOTHING FOUND OR SET
- SET ½" X 30" REBAR WITH 1 ½" STAINLESS STEEL CAP, LS 107707
- SET PK NAIL WITH 1 ½" STAINLESS STEEL FLASHER, LS-107707
- ( ) RECORD DATA, SEE NOTES 3 & 4
- EASEMENT VACATED THIS PLAT
- VACATED PROPERTY LINE
- EASEMENT DEDICATED THIS PLAT
- TIDELAND LEASE LINE
- SURVEY TIE
- EXISTING EASEMENT LINE
- SURVEYED LOT LINE
- SURROUNDING STATUS LINE

TYPICAL CAP SET

PND LS-107707

CITY & BOROUGH OF JUNEAU

Attest: Elizabeth J. McEwen, Municipal Clerk
City and Borough of Juneau

COMMUNITY DEVELOPMENT APPROVAL

I HEREBY CERTIFY THAT THE PLAT HEREON HAS BEEN FOUND TO COMPLY WITH TITLE 49 OF THE CODE AND CITY AND BOROUGH OF JUNEAU AND IS APPROVED BY THE CITY AND BOROUGH OF JUNEAU, DEPARTMENT OF COMMUNITY DEVELOPMENT, FOR RECORDING IN THE OFFICE OF THE JUNEAU RECORDING DISTRICT, JUNEAU, ALASKA.

BY _____ DATE 5/28/2019

JILL MACLEAN, DIRECTOR
CITY AND BOROUGH OF JUNEAU
COMMUNITY DEVELOPMENT DEPARTMENT

SURVEYORS CERTIFICATE

I, IAIN BROWN, IN MY CAPACITY AS A PROFESSIONAL LAND SURVEYOR REGISTERED IN THE STATE OF ALASKA, CERTIFY THAT THIS PLAT REPRESENTS THE SURVEY MADE BY ME OR UNDER MY DIRECT SUPERVISION, THAT THE ACCURACY OF THE SURVEY IS WITHIN THE LIMITS REQUIRED BY TITLE 49 OF THE CODE OF THE CITY AND BOROUGH OF JUNEAU, THAT ALL DIMENSIONAL AND RELATIVE BEARINGS ARE CORRECT, AND THAT MONUMENTS ARE SET IN PLACE AND NOTED UPON THIS PLAT AS PRESENTED.

Date 5/15/19

STATE OF ALASKA
49TH
IAIN C. BROWN
LS-107707
5/15/19
REGISTERED PROFESSIONAL LAND SURVEYOR

2019-19
Plat #
Juneau
Rec'd for
5/29/19
Date
Time 10:35 AM

BASIS OF BEARING

THE BASIS OF BEARING FOR THIS PLAT IS THE CALCULATED RECORD BEARING OF S35°56'28"E BETWEEN THE NORTH CORNER OF LOT 7A, BLOCK 83, TIDELANDS ADDITION TO THE CITY OF JUNEAU, PLAT NO 87-10 AND THE RESET MARKING RM C44 ATS NO. 3, AS NOTED.

NOTES

1. THE ERROR OF CLOSURE OF THIS SURVEY DOES NOT EXCEED 1:5000
2. ALL DISTANCES ARE MEASURED IN U.S. SURVEY FEET, REDUCED TO HORIZONTAL.
3. RECORD INFORMATION DERIVED FROM ARCHIPELAGO SUBDIVISION, A SUBDIVISION OF LOT 7A1, LOT 9A AND FRACTION OF LOT 9B, BLOCK 83 TIDELANDS ADDITION, ATS NO. 3, PLAT NO. 2013-22. RECORD INFORMATION ALSO OBTAINED FROM JUNEAU DOCUMENT NO. 2015-002355-0.
4. WHERE DIFFERENT FROM MEASURED OR CALCULATED, RECORD DIMENSIONS ARE SHOWN IN PARENTHESIS
5. PARTS OF THIS SUBDIVISION ARE LOCATED IN A VELOCITY FLOOD ZONE, ACCORDING TO THE ADOPTED FLOOD INSURANCE RATE MAPS OF THE CITY AND BOROUGH OF JUNEAU. SPECIAL REGULATIONS MAY APPLY.
6. IN ACCORDANCE WITH CITY CODE, THE COMMUNITY DEVELOPMENT DIRECTOR AMENDED THE LANDSLIDE AND AVALANCHE MAPS TO REMOVE FORMER LOTS 1, 2, 3, AND 4 FROM THE MODERATE HAZARD ZONE (AME2018-0010).
7. EXECUTION OF THIS PLAT VACATES THE EXISTING 50' PUBLIC ACCESS EASEMENT, DEDICATED BY PLAT 2013-22, FROM SOUTH FRANKLIN STREET TO LOT 4.
8. DOMESTIC WATER AND SANITARY SEWER DISPOSAL PROVIDED BY THE CITY AND BOROUGH OF JUNEAU PUBLIC UTILITIES.
9. THE VERTICAL DATUM FOR THIS SURVEY IS MEAN LOWER LOW WATER BASED ON A GPS RTK TIE TO NOAA BENCH MARK "2210 K 2011" LOCATED AT THE BASE OF A FLAGPOLE BY THE JUNEAU ARTS/CULTURE CENTER WITH A PUBLISHED ELEVATION OF 27.10' MLLW.
10. THIS SUBDIVISION IS AFFECTED BY A CITY OF JUNEAU DOCK MAINTENANCE, OPERATION AND RECONSTRUCTION EASEMENT, DATED FEBRUARY 14, 1967, RECORDED AS JUNEAU BOOK 85, PAGE 20, LOCATION UNDETERMINED AND NOT SHOWN HEREON
11. THIS SUBDIVISION IS AFFECTED BY A CITY OF JUNEAU JOINT USE AND OCCUPANCY EASEMENT, DATED AUGUST 05, 1964, RECORDED AS BOOK 73 PAGE 335, LOCATION UNDETERMINED AND NOT SHOWN HEREON.

PLAT OF
LOTS 1A, 2A, & 4A
A SUBDIVISION OF
LOTS 1,2,3, & 4
ARCHIPELAGO SUBDIVISON
WITHIN CITY & BOROUGH OF JUNEAU, ALASKA
JUNEAU RECORDING DISTRICT

STATE RECORDER'S OFFICE AT JUNEAU

OWNERS: ARCHIPELAGO PROPERTIES LLC
ONE SEALASKA PLAZA, STE 300
JUNEAU, ALASKA 99801

&

CITY AND BOROUGH OF JUNEAU
155 SOUTH SEWARD STREET
JUNEAU, ALASKA 99801

PND ENGINEERS, INC
1506 West 36th Avenue
Anchorage, Alaska 99503 Phone: 907.561.1011
www.pndengineers.com
AK. LIC# AECC250

SCALE:	1" = 30'	FIELD BOOK:	N/A	GRID:	JUNEAU
DESIGNED BY:	IB	DATE:	2/21/19	CASE NO:	MIP2019 0004
CHECKED BY:	DS/MW	PROJECT NO:	182045	SHEET NO:	1 OF 1

Planning Commission
(907) 586-0715
PC_Comments@juneau.org
www.juneau.org/plancomm
155 S. Seward Street • Juneau, AK 99801

PLANNING COMMISSION
NOTICE OF DECISION
Date: February 3, 2020
Case No.: USE2019 0021

Tidland/Schmidt Architects, P.C.
ATTN: Frank Schmidt
3611 SW Hood Ave, Suite 200
Portland, OR 97239

Proposal:	A Conditional Use Permit for two (2) two-story, commercial mixed-use buildings
Property Address:	365 S. Franklin Street
Legal Description:	Archipelago Lot 1A
Parcel Code No.:	1C070K830022
Hearing Date:	January 28, 2020

The Planning Commission, at its regular public meeting, adopted the analysis and findings listed in the attached memorandum dated January 21, 2020, and approved the Conditional Use Permit for two (2) two-story, commercial mixed-use buildings, to be conducted as described in the project description and project drawings submitted with the application and with the following conditions as amended during the meeting:

1. Prior to issuance of a Building Permit, the applicant shall submit a lighting plan illustrating the location and type of exterior lighting proposed for the development. All exterior lighting fixtures shall be of a "full cutoff" design, and exterior lighting shall be designed and located to minimize offsite glare. Approval of the plan shall be at the discretion of the Community Development Department, according to the requirements at CBJ 49.40.230(d).
2. Exterior lighting shall not be used in a manner that produces glare on public highways or neighboring property.
3. Prior to issuance of a Building Permit, the applicant must submit documentation to demonstrate that all applicable parking code requirements have been met, in conformance with CBJ 49.40.200.

4. The applicant shall consider all possible tools and avenues available to ensure year-round occupancy of the structures, including, but not limited to, housing.

Attachments: January 21, 2020 memorandum from Teri Camery, Community Development, to the CBJ Planning Commission regarding USE2019 0021.

This Notice of Decision does not authorize construction activity. Prior to starting any project, it is the applicant's responsibility to obtain the required Building Permits.

This Notice of Decision constitutes a final decision of the CBJ Planning Commission. Appeals must be brought to the CBJ Assembly in accordance with CBJ 01.50.030. Appeals must be filed by 4:30 P.M. on the day twenty days from the date the decision is filed with the City Clerk, pursuant to CBJ 01.50.030 (c). Any action by the applicant in reliance on the decision of the Planning Commission shall be at the risk that the decision may be reversed on appeal (CBJ 49.20.120).

Effective Date: The permit is effective upon approval by the Commission, January 28, 2020

Expiration Date: The permit will expire 18 months after the effective date, or July 28, 2021, if no Building Permit has been issued and substantial construction progress has not been made in accordance with the plans for which the development permit was authorized. Application for permit extension must be submitted thirty days prior to the expiration date.

Project Planner: _____ _____ for ML

Teri Camery, Senior Planner
Community Development Department

Michael LeVine, Chair
Planning Commission

_____ 2/3/2020

Filed With Municipal Clerk

Date

cc: Plan Review

NOTE: The Americans with Disabilities Act (ADA) is a federal civil rights law that may affect this development project. ADA regulations have access requirements above and beyond CBJ-adopted regulations. Owners and designers are responsible for compliance with ADA. Contact an ADA - trained architect or other ADA trained personnel with questions about the ADA: Department of Justice (202) 272-5434, or fax (202) 272-5447, NW Disability Business Technical Center (800) 949-4232, or fax (360) 438-3208.

CITY AND BOROUGH OF JUNEAU
ALASKA'S CAPITAL CITY
COMMUNITY DEVELOPMENT

(907) 586-0715
CDD_Admin@juneau.org
www.juneau.org/CDD
155 S. Seward Street • Juneau, AK 99801

DATE: January 21, 2020

TO: Planning Commission

FROM: Teri Camery, Senior Planner
Community Development Department

CASE NO.: USE2019 0021

PROPOSAL: A Conditional Use Permit for two (2) two-story commercial mixed use buildings

GENERAL INFORMATION

Applicant:	Tidland/Schmidt Architects, P.C.
Property Owner:	Archipelago Properties, LLC
Property Address:	365 S. Franklin Street
Legal Description:	Archipelago Lot 1A
Parcel Code Number:	1C070K830022
Site Size:	33,875 square feet
Comprehensive Plan Land Use Designation:	Marine Commercial
Zoning:	Waterfront Commercial
Utilities:	City water and sewer
Access:	South Franklin Street
Existing Land Use:	Vacant lot
Surrounding Land Use:	North - Library and parking garage; Waterfront Commercial South - Retail; Waterfront Commercial East - South Franklin Street; Mixed Use

West - Cruise ship dock; Waterfront Commercial

VICINITY MAP

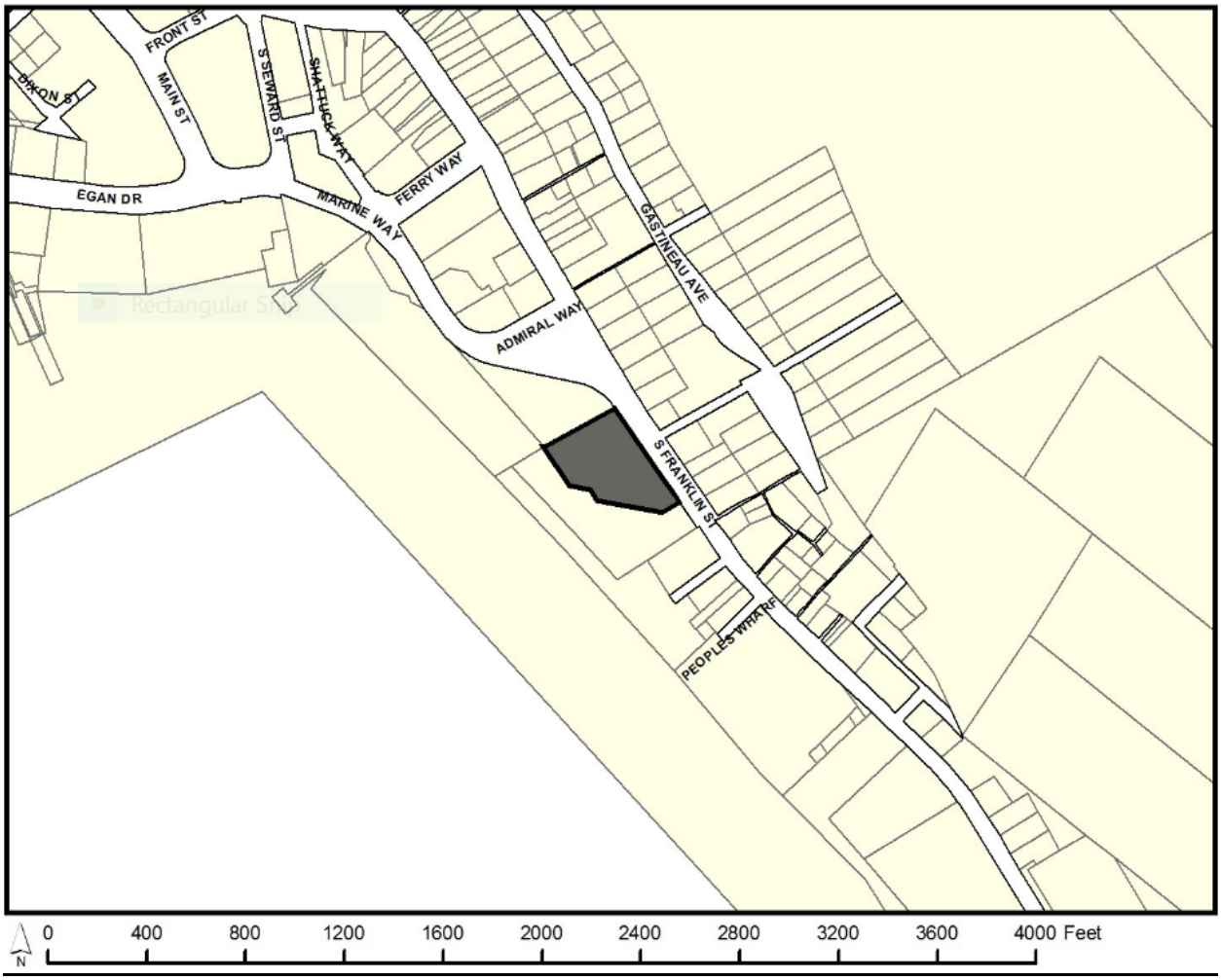

ATTACHMENTS

Attachment 1 Development Permit Application
Attachment 2 Conditional Use Permit Application
Attachment 3 Pre-application conference meeting notes
Attachment 4 Historic Resources Advisory Committee letter, 12-13-19
Attachment 5 Project Narrative
Attachment 6 Hazard Map Amendment Notice of Decision
Attachment 7 Preliminary Construction Schedule
Attachment 8 Subdivision Plat

Attachment 9 Landscaping Plan
Attachment 10 Pedestrian Circulation Plan
Attachment 11 Drainage Plan
Attachment 12 Utility Plan
Attachment 13 Flood map drawing
Attachment 14 General Site Development Plan
Attachment 15 Setback Plan
Attachment 16 First and Second floor site plans
Attachment 17 Building height calculations and exterior elevations
Attachment 18 Project renderings
Attachment 19 Site photometrics and light fixture types
Attachment 20 Color and material boards
Attachment 21 USE2018 0015 City Project application, adjacent to the development
Attachment 22 USE2018 0015 Notice of Decision
Attachment 23 Historic District Boundary Map
Attachment 24 Agency comments
Attachment 25 Leasing Plans
Attachment 26 Downtown Historic District Design Standards and Guidelines, Chapters 4, 5 & 7

PROJECT DESCRIPTION

The applicant requests a Conditional Use Permit for the development of two (2) two-story mixed-use commercial buildings on the downtown waterfront adjacent to the downtown library/parking garage. Leasing plans included in Attachment 25 indicate two commercial options: one, a combination of retail, office, and restaurant uses; and two, retail, office, and storage uses. The first 40 feet of the property lies with the Downtown Historic District, as shown in Attachment 23; review therefore includes an analysis of Historic District guidelines and recommendations.

The applicant has requested a Variance to reduce the parking requirement from 80 off-street spaces to zero spaces, concurrently under review as VAR2019 0005. The Variance is based on the option with the highest parking requirement, which includes the restaurant instead of storage.

BACKGROUND

The development is adjacent to a recently approved City and Borough of Juneau (CBJ) development that includes a transportation staging area and public restrooms. The CBJ development was approved as USE2018 00015/CSP2018 0010 and FZE2018 00001 on November 15, 2018. The project application and final Notice of Decision for the CBJ development are included in Attachments 21 and 22.

The subject property is the site of the former Juneau Cold Storage building, which burned in the

1980s. The property has been mostly vacant since Archipelago Properties LLC purchased it; for several years, however, it was leased to private businesses for seasonal food and retail uses.

The proposed development is the result of several years of cooperation and coordination between Archipelago Properties LLC and CBJ Docks and Harbors, starting in 2017. These efforts addressed property boundaries, project design, and public amenities. (Project Narrative p. 13, Attachment 5) The final plat delineating Archipelago and CBJ property was approved in May 2019 at Plat 2019-19, included in Attachment 8.

ANALYSIS

Project Site and Design

The site is zoned Waterfront Commercial, which requires uses to be water-dependent, water-related, or water-oriented. These definitions are listed in CBJ 49.80.120 as follows:

> *Water-dependent means a use or activity which can be carried out only on, in, or adjacent to water areas because the use requires access to the water body.*
>
> *Water-oriented means uses or mixtures of uses which would benefit from being near the water and are intrinsic to waterfront development and which meet all of the following criteria:*
>
> *(1) Uses must be part of a larger fully-planned development which also incorporates water-dependent or water-related uses;*
> *(2) Uses which are not directly water-dependent or water-related must be necessary to the overall development of the project;*
> *(3) Uses must be integrated functionally by architectural and site designs which are sensitive to the waterfront site;*
> *(4) Uses must act as economic stimuli and anchor points to enable other forms of development, particularly public access improvements; and*
> *(5) Uses must contribute to a diverse and healthy downtown core.*
>
> *Water-related means a use or activity which is not directly dependent upon access to a water body, but which provides goods or services that are directly associated with water dependence and which, if not located adjacent to water, would result in a public loss of quality in the goods or services offered.*

The proposed development is consistent with the water-related definition because the commercial development provides goods and services which are directly associated with the water-dependent cruise ship mooring facility.

Setbacks and Height Requirements

Waterfront Commercial requires 10-foot setbacks on all sides. Waterfront Commercial also has a 35-foot height limit. In addition, the development must comply with Historic District height recommendations and setbacks whenever practicable, within the first 40 feet of the development that falls within the district. Recommended Historic District setbacks are zero feet on the front and sides, with a height limitation of 38 feet.

Project drawings in attachments 16 and 17 demonstrate that the development complies with height requirements. Waterfront Commercial setbacks have been followed in the rear, both sides, and for the front setback of Building A. Building B complies with the zero-foot front setback recommended in the Historic District plan.

Historic District Requirements

The first 40 feet of the property is located within the Downtown Historic District (Attachment 23). Therefore Downtown Historic District Standards and Guidelines apply, specifically those listed in Chapter 4, Design Guidelines for Historic Building Materials; Chapter 5, Design Guidelines for Historic Building Elements; and Chapter 7, Design Guidelines for New Construction. These chapters are provided for reference in Attachment 26.

The current Historic District Map was adopted by ordinance in 2013 (Serial No. 2013-01). CBJ Code 49.70.530, Standards for Historic District Design Review, states that the reviewing body (the Planning Commission, when a Conditional Use Permit is required) shall use "applicable guidelines and policies contained in the downtown historic development plan." Staff notes that though the historic district map has been adopted, the Downtown Historic District Standards and Guidelines have not been officially adopted in the 2013 Juneau Comprehensive Plan or in the Land Use Code.

The Historic District Advisory Committee (HRAC) reviewed the development with the applicant at its December 6, 2019 meeting. The HRAC provided a letter dated December 13, 2019 with recommendations, included as Attachment 4. The HRAC found many aspects of the design that comply with the Downtown Historic District Design Standards and Guidelines including: the first floor transparency along South Franklin Street; the placement of a canopy above the first floor along South Franklin Street; the height and scale of the buildings; the spacing of façade doors and windows; and the decorative paving feature under the central canopy. The applicant's Project Narrative (Attachment 5, pp. 7-11) includes a point by point response to all 12 points in these recommendations. Color and material boards are also provided in Attachment 20.

Staff respectfully suggests that Commissioners read the HRAC letter and the applicant's response in full. A partial summary is provided below:

- The development meets the recommended Historic District front yard setback of zero on

Building B. The applicant has explained that it is not possible to meet the zero-foot front yard setback on Building A, nor the recommended zero-foot side yard setbacks, due to the loading zone on the south side and the underground utilities on the north side.

- The applicant has altered the gable roof design and replaced it with a peaked false front design per HRAC's recommendation. The applicant disagrees with HRAC's recommendation to remove the clock tower; it therefore remains in the plans.
- The development includes a canopy as required in the Historic District, however HRAC has recommended a different design for the central canopy with a flat roof. The applicant disagrees and notes that the section 7.13 allows for new interpretations of traditional building styles.
- The applicant requests the option to use single- or double-hung windows on the second story, rather than just double-hung as stated by the HRAC and noted in Section 7.26-7.28.
- The HRAC recommends horizontal siding rather than vertical, in accordance with 7.11. The applicant would like to use both approaches.
- The applicant has developed a recessed entryway on the right-of-way line on South Franklin but requests flexibility with other entryways.
- The applicant has incorporated kick plates into the design as recommended.

Although the design features of the buildings contribute to the overall character of the development, certain design features will be more visible than others. Directly across South Franklin Street are two historic buildings that are listed as "contributing" to the authenticity of the Downtown Historic District. Both of these historic buildings have horizontal siding on the first and second floors. With this in mind, staff recommends as a condition of approval that the applicant be required to use horizontal siding on the first floor, as follows:

1. The development shall utilize horizontal siding on the first floor of both buildings.

With this recommended condition, staff concludes that the proposed development significantly complies with the Historic District Plan.

Parking

The proposed development includes one loading zone on the southwest side of the property, most clearly shown in the Leasing Plans, Attachment 25. The applicant has requested a Variance to reduce the off-street parking requirement from 80 spaces to zero spaces. This figure includes a 30 percent reduction from the full parking requirement of 114, since the development is located in the PD-2 Parking District. The variance is concurrently under review as VAR2019 0005.

Because the leasing arrangements for the two buildings are not final, the applicant has provided two scenarios for building usage, Option A and Option B. The off-street parking requirement and variance analysis is based on Option B with the highest parking requirement of 80 spaces, versus Option A which is 60 spaces. Parking requirements are listed in CBJ Code 49.40.210.

Pedestrian and Vehicular Circulation

The proposed development has been specifically designed to be pedestrian-friendly, and includes a pedestrian circulation plan (Attachment 10). With just one loading zone and no parking proposed, vehicular circulation is not relevant.

Vegetative Cover and Landscaping

The vegetative cover requirement for the Waterfront Commercial zoning district is 10 percent. With a lot size of 33,875 square feet, the requirement is therefore 3,387 square feet. The applicant has proposed 4,249 square feet of landscaping, for 12.53 percent of the lot, exceeding the requirement. Pages 5-6 of the Project Narrative, Attachment 5, describe the landscaping as a combination of traditional planters and open areas. The landscaping site plan in Attachment 9 provides additional detail. The applicant also proposes hanging baskets, however the baskets are not included in the calculation to meet the landscape requirements. The applicant notes other points of interest under consideration, such as a decorative hardscape representing a river or channel, a sculpture, or a totem. Exact designs have not been developed.

Drainage

A drainage site plan has been included as Attachment 11, in addition to the written description in the Project Narrative (Attachment 5, pp. 6-7). The drainage plan has a combination of features including an oil-water separator, catch basins and trench drains, perforated foundation drains, and awning and roof drains. The drainage plan will be further reviewed by CBJ during the building/grading permit review process.

Lighting

A lighting site plan with fixture types has been included as Attachment 19, in addition to the written description in the Project Narrative (Attachment 5, p. 6). The applicant states that the lighting design will include accent lights and LED display lights to provide interest within the central canopy and roof structure.

04 CBJAC 050.020 establishes performance standards for commercial and industrial uses. Section (b) requires that industrial and exterior lighting not create glare on public highways or neighboring property. Staff recommends the following standard conditions, which were also applied to the adjacent CBJ development:

2. Prior to issuance of a building permit, the applicant shall submit a lighting plan illustrating the location and type of exterior lighting proposed for the development. All exterior lighting fixtures shall be of a “full cutoff” design, and exterior lighting shall

be designed and located to minimize offsite glare. Approval of the plan shall be at the discretion of the Community Development Department, according to the requirements at CBJ 49.40.230(d).

3. Exterior lighting shall not be used in a manner that produces glare on public highways or neighboring property.

Noise

No significant noise is expected from the development except during construction. The construction schedule will comply with the CBJ Noise Ordinance.

Public Health or Safety

The Archipelago property is within an area originally designated as a moderate hazard zone. CBJ Docks and Harbors applied to the Community Development Department (CDD) for removal of the area from the hazard zone, with supporting analysis. The CDD Director approved the amendment to remove the Archipelago property from the hazard zone in 2018, per the attached Notice of Decision (Attachment 6).

In addition, the project area is adjacent to a FEMA-designated Velocity Flood Zone with a base flood elevation of 25 feet in current maps. In addition, flood regulations prohibit habitable structures seaward of the mean high tide line. The project drawings in Attachment 13 demonstrate that the proposed development is outside of the flood zone and landward of mean high tide and therefore complies with all applicable regulations. Staff notes that the FEMA draft flood maps, expected to be adopted in 2020, do not include any changes for this particular coastal area.

In summary, project site has been formally removed from the moderate hazard zone and lies entirely outside the Velocity flood zone. No evidence indicates any public health or safety impacts from the proposed development.

Habitat

The proposed development does not affect any sensitive habitat. The applicant has provided a drainage plan that will address stormwater. The project site is located in the mapped 'Special Waterfront Area' that runs along the downtown tidelands. The project is a permissible use in this area (CBJ 49.70.960(b)). A Special Waterfront Area is an area that is designated for development and considered to have low habitat value.

Property Value or Neighborhood Harmony

The project site is surrounded by a cruise ship dock to the west, the CBJ parking garage and library to the north, Franklin Street and Mixed Use retail to the east, and the recently approved CBJ transportation staging area and restrooms to the south, followed by more retail uses. The proposed development is typical of waterfront developments in the Waterfront Commercial zoning district. No comments were received by the CBJ Assessor's office during the agency review period regarding property value. No evidence suggests that the development will have a significant adverse effect on property value or neighborhood harmony.

AGENCY AND PUBLIC COMMENTS

An agency review period was conducted from October 14 to October 30, 2019. Comments were received from CBJ Streets, the CCFR Fire Marshal, and CBJ Public Works and Engineering, which are included in Attachment 24.

CBJ Streets noted that issues with storm drains and setbacks were addressed during the pre-application conference; that the traffic circulation was backwards in the parking area (staff notes that this applies to the previously approved CBJ development. The proposed Archipelago development does not include any parking); and that LED lighting must be included in the canopy design.

CBJ CCFR noted requirements for fire alarm systems.

CBJ Engineering and Public Works had no concerns and noted that further review would be managed through building permits.

No public comments have been received to date.

CONFORMITY WITH ADOPTED PLANS

2013 Juneau Comprehensive Plan

The 2013 Juneau Comprehensive Plan designates the subject parcel as Marine Commercial, defined as:

> *Land to be used for water-dependent commercial uses such as marinas/boat harbors, marine vessel and equipment sales and repair services, convenience goods and services for commercial and sport fishing, marine recreation and marine tourism activities such as food and beverage services, toilet and bathing facilities, bait and ice shops, small scale fish processing facilities, hotels and motels, and similar goods and services to support mariners and their guests. Float homes, house boats, and live-aboards would be residential uses to be allowed within an MC district.*

The proposed development supports marine tourism amenities that are substantially consistent with this definition.

Chapter Five, Economic Development, includes the following Policies, Development Guidelines, and Implementing Actions related to the proposed development:

> **Policy 5.1** *To develop and sustain a diverse economy, providing opportunities for employment for all residents.*
>
> > **5.1–1A1.** *Work with provide-sector industries and businesses and public sector agencies that are interested in locating or expanding within the City and Borough of Juneau, and consider offering land, tax incentives, or other benefits to encourage new development.*
>
> **Policy 5.5** *To maintain and strengthen downtown Juneau as a safe, dynamic, and pleasant center for government and legislative activities, public gatherings, cultural and entertainment events, and residential and commercial activities in a manner that complements its rich historic character and building forms.*
>
> > **5.5–DG 1.** *When reviewing applications for new downtown Juneau development, consider the visual impacts on downtown building form, urban design and view corridors, as well as impacts on the livability of downtown with regard to circulation, housing accommodations, air quality, noise and hazard abatement and provision of goods and services, to ensure downtown provides a clean, safe, attractive, dynamic, interesting, enjoyable, walkable, culturally diverse and affordable neighborhood within which to live, work and play.*
> >
> > **5.5–DG 2**. *Consider the policies, guidelines and development recommendations of plans like the CBJ Long Range Waterfront Plan, the Willoughby District Plan, and the Capital Transit Plan when reviewing capital improvement programs and development permits for, or applicable to, the downtown Juneau area.*
>
> **Policy 5.6** *To encourage tourism, convention, and other visitor-related activities through the development of appropriate facilities and services, while protecting Juneau's natural, cultural, and economic attractions for local residents and visitors alike, and to participate in the accommodation of the future growth of tourism in a manner that addresses both community and industry concerns.*
>
> **Policy 5.11** *To encourage the location and growth of locally-based basic sector industries that provide year-round, full-time employment and provide tax revenues that support public services.*

> **Policy 5.9** *To facilitate availability of sufficient and suitable water-based facilities and associated land-based acreage to support water-dependent uses, and to work closely with the public and private sectors to facilitate sustainable marine commerce, commercial fishing, seafood processing, recreation, public access to the shoreline, and enjoyment of the waterfront through development of well-designed port facilities.*
>
> > **Development Guideline 5.9–DG 1.** *Assure public access to the shoreline and water when reviewing development applications.*
> >
> > **Development Guideline 5.9–DG 2.** *To the greatest extent practicable, orient new structures and facilities located on the waterfront in such a way as to preserve views of the water from public roadways and vista points.*
> >
> > **Implementing Action 5.9–1A3.** *Assist with coordination of cruise ship traffic and commercial fishing operations to minimize conflicts.*

The proposed development addresses these policies and actions by providing new commercial options for tourists and residents, while preserving water views, public access to the shoreline, and public gathering spaces. In addition, the development complies with the 2004 Long Range Waterfront Plan, and with Downtown Historic District guidelines to the greatest extent practicable.

2004 Long Range Waterfront Development Plan

The Long Range Waterfront Development Plan divides the downtown waterfront from the Douglas Bridge to the Little Rock Dump into specific areas with recommendations for future development. The subject property is within Area D, the Franklin Street Corridor. The Plan identifies two options for development in this area, D1 and D2. Option D1 calls for the creation of pocket parks, a new visitor information center, cultural facilities, and mixed use redevelopment. Option D2 is similar except that it calls for city-owned cruise ship docks to be modified to accommodate larger ships; this option is now complete.

The Project Narrative, Attachment 5 pp. 11-12, includes an explanation of how the development complies with this plan with the proposed mixed-use commercial development. Staff concurs with the applicant's explanation.

2015 Juneau Economic Development Plan

The 2015 Juneau Economic Development Plan has eight initiatives. Initiative Seven is *Revitalize Downtown*, which includes an objective to develop a downtown improvement strategy. The proposed development will provide tourist and community amenities, retail and restaurant options, and will increase property tax revenue. The development substantially complies with this plan.

Downtown Historic District Design Standards and Guidelines

Compliance with the Downtown Historic District Design Standards and Guidelines has been addressed in the Analysis section of this report. The development substantially conforms with Historic District Guidelines where practicable.

FINDINGS

CBJ 49.15.330 (e)(1), Review of Director's Determinations, states that the Planning Commission shall review the Director's report to consider:

1. Whether the application is complete;
2. Whether the proposed use is appropriate according to the Table of Permissible Uses; and,
3. Whether the development as proposed will comply with the other requirements of this chapter.

The Commission shall adopt the Director's determination on the three items above unless it finds, by a preponderance of the evidence, that the Director's determination was in error, and states its reasoning for each finding with particularity.

CBJ 49.15.330 (f), Commission Determinations, states that even if the Commission adopts the Director's determination, it may nonetheless deny or condition the permit if it concludes, based upon its own independent review of the information submitted at the public hearing, that the development will more probably than not:

1. Materially endanger the public health or safety;
2. Substantially decrease the value of or be out of harmony with property in the neighboring area; or,
3. Not be in general conformity with the comprehensive plan, thoroughfare plan, or other officially adopted plans.

Per CBJ 49.15.330 (e) & (f), Review of Director's & Commission's Determinations, the Director makes the following findings on the proposed development:

1. Is the application for the requested conditional use permit complete?

Yes. Staff finds the application contains the information necessary to conduct full review of the proposed operations. The application submittal by the applicant, including the appropriate fees, substantially conforms to the requirements of CBJ Chapter 49.15.

2. Is the proposed use appropriate according to the Table of Permissible Uses?

Yes. The requested permit is appropriate according to the Table of Permissible Uses. The permit is listed at CBJ 49.25.300, Section 2.200 for the Waterfront Commercial zoning district.

3. Will the proposed development comply with the other requirements of this chapter?

Yes. The proposed development complies with the other requirements of this chapter. Public notice of this project was provided in the January 17 and January 24, 2020 issues of the Juneau Empire's "Your Municipality" section, and a Notice of Public Hearing was mailed to all property owners within 500 feet of the subject parcel. Moreover, a Public Notice Sign was posted on the subject parcel, visible from the public Right of Way.

4. Will the proposed development materially endanger the public health or safety?

No. As described in the preceding analysis, the proposed development has been formally removed from the moderate hazard zone and lies outside of the velocity flood zone and is landward of the mean high tide line, in conformance with all requirements. No evidence indicates that the proposed development will materially endanger public health or safety.

5. Will the proposed development substantially decrease the value of or be out of harmony with property in the neighboring area?

No. Based on the preceding analysis, the proposed development is comparable to other waterfront developments in the neighboring area which provide a variety of retail services to visitors and the general public. No evidence indicates that the development will decrease the value of, or be out of harmony with, property in the neighboring area.

6. Will the proposed development be in general conformity with the land use plan, thoroughfare plan, or other officially adopted plans?

Yes. Based on the preceding analysis, the proposed development is in general conformity with the 2013 Juneau Comprehensive Plan, the 2004 Long Range Waterfront Development Plan, the 2015 Juneau Economic Development Plan, and the Downtown Historic District Design Standards and Guidelines.

Per CBJ 49.70.900 (b)(3), General Provisions, the Director makes the following Juneau Coastal Management Program consistency determination:

7. Will the proposed development comply with the Juneau Coastal Management Program?

Yes. The proposed development does not affect any sensitive habitat. The project site is located in the mapped 'Special Waterfront Area' that runs along the downtown tidelands. The project is a permissible use in this area (CBJ 49.70.960(b)). A Special Waterfront Area is an area

that is designated for development and considered to have low habitat value.

RECOMMENDATION

Staff recommends that the Planning Commission adopt the Director's analysis and findings and grant the requested Conditional Use Permit for two (2) two-story commercial mixed use buildings. The approval is subject to the following conditions:

1. The development shall utilize horizontal siding on the first floor of both buildings.

2. Prior to issuance of a building permit, the applicant shall submit a lighting plan illustrating the location and type of exterior lighting proposed for the development. All exterior lighting fixtures shall be of a "full cutoff" design, and exterior lighting shall be designed and located to minimize offsite glare. Approval of the plan shall be at the discretion of the Community Development Department, according to the requirements at CBJ 49.40.230(d).

3. Exterior lighting shall not be used in a manner that produces glare on public highways or neighboring property.

Community Development
(907) 586-0715
PC_Comments@juneau.org
www.juneau.org/plancomm
155 S. Seward Street • Juneau, AK 99801

BOARD OF ADJUSTMENT
NOTICE OF DECISION

Date: February 6, 2020
File No.: VAR2019 0005

Tiland/Schmidt Architects, P.C.
3611 Southwest Hood Avenue, Suite 200
Portland, OR 97239

Proposal:	A Variance to reduce the parking requirement to zero in association with USE2019 0021, a proposed two (2) two-story commercial mixed-use development
Property Address:	365 S. Franklin St.
Legal Description:	Lot 1A Archipelago
Parcel Code No.:	1C070K830022
Hearing Date:	January 28, 2020 and February 4, 2020

The Board of Adjustment, at its regular public meeting, adopted the analysis and findings listed in the attached memorandum dated January 22, 2020, and denied the non-administrative variance to reduce the off-street parking requirement to zero in association with USE2019 0021, a proposed two (2) two-story commercial mixed-use development. The Board of Adjustment amended Finding 2C as follows:

c. The grant of the variance is not detrimental to public health, safety, or welfare…

No. Based on the preceding analysis, a grant of the variance for a zero parking requirement may be detrimental to the public health, safety, or welfare by pushing employees or customers of the development to park in surrounding neighborhoods.

Attachment: January 22, 2020 memorandum from Teri Camery, Community Development, to the CBJ

Board of Adjustment regarding VAR2019 0005.

This Notice of Decision does not authorize construction activity. Prior to starting any development project, it is the applicant's responsibility to obtain the required building permits.

This Notice of Decision constitutes a final decision of the CBJ Board of Adjustment. Appeals must be brought to the CBJ Assembly in accordance with CBJ 01.50.030. Appeals must be filed by 4:30 p.m. on the day twenty days from the date the decision is filed with the City Clerk, pursuant to CBJ 01.50.030 (c). Any action by the applicant in reliance on the decision of the Board of Adjustment shall be at the risk that the decision may be reversed on appeal (CBJ 49.20.120).

Project Planner: _____
Teri Camery, Senior Planner
Community Development Department

_____
Michael LeVine, Chair
Planning Commission

_____
Filed With Municipal Clerk

2/11/2020
Date

cc: Plan Review

NOTE: The Americans with Disabilities Act (ADA) is a federal civil rights law that may affect this development project. ADA regulations have access requirements above and beyond CBJ-adopted regulations. Owners and designers are responsible for compliance with ADA. Contact an ADA-trained architect or other ADA trained personnel with questions about the ADA: Department of Justice (202) 272-5434, or fax (202) 272-5447, NW Disability Business Technical Center (800) 949-4232, or fax (360) 438-3208.

CITY AND BOROUGH OF JUNEAU
ALASKA'S CAPITAL CITY
COMMUNITY DEVELOPMENT

(907) 586-0715
CDD_Admin@juneau.org
www.juneau.org/CDD
155 S. Seward Street • Juneau, AK 99801

DATE: January 22, 2020

TO: Board of Adjustment

FROM: Teri Camery, Senior Planner
Community Development Department

FILE NO.: VAR2019 0005

PROPOSAL: A non-administrative variance to reduce the off-street parking requirement to zero in association with USE2019 0021, a proposed two (2) two-story commercial mixed-use development

GENERAL INFORMATION

Applicant:	Tiland/Schmidt Architects, P.C.
Property Owner:	Archipelago Properties, LLC
Property Address:	365 S. Franklin Street
Legal Description:	Lot 1A Archipelago
Parcel Code Number:	1C070K830022
Site Size:	33,875 square feet
Comprehensive Plan Land Use Designation:	Marine Commercial
Zoning:	Waterfront Commercial
Utilities:	City water and sewer
Access:	South Franklin Street
Existing Land Use:	Vacant

Surrounding Land Uses:

North - Library and Parking Garage; Waterfront Commercial
South - Retail; Waterfront Commercial
East - South Franklin Street; Mixed Use
West - Cruise ship dock; Waterfront Commercial

Vicinity Map

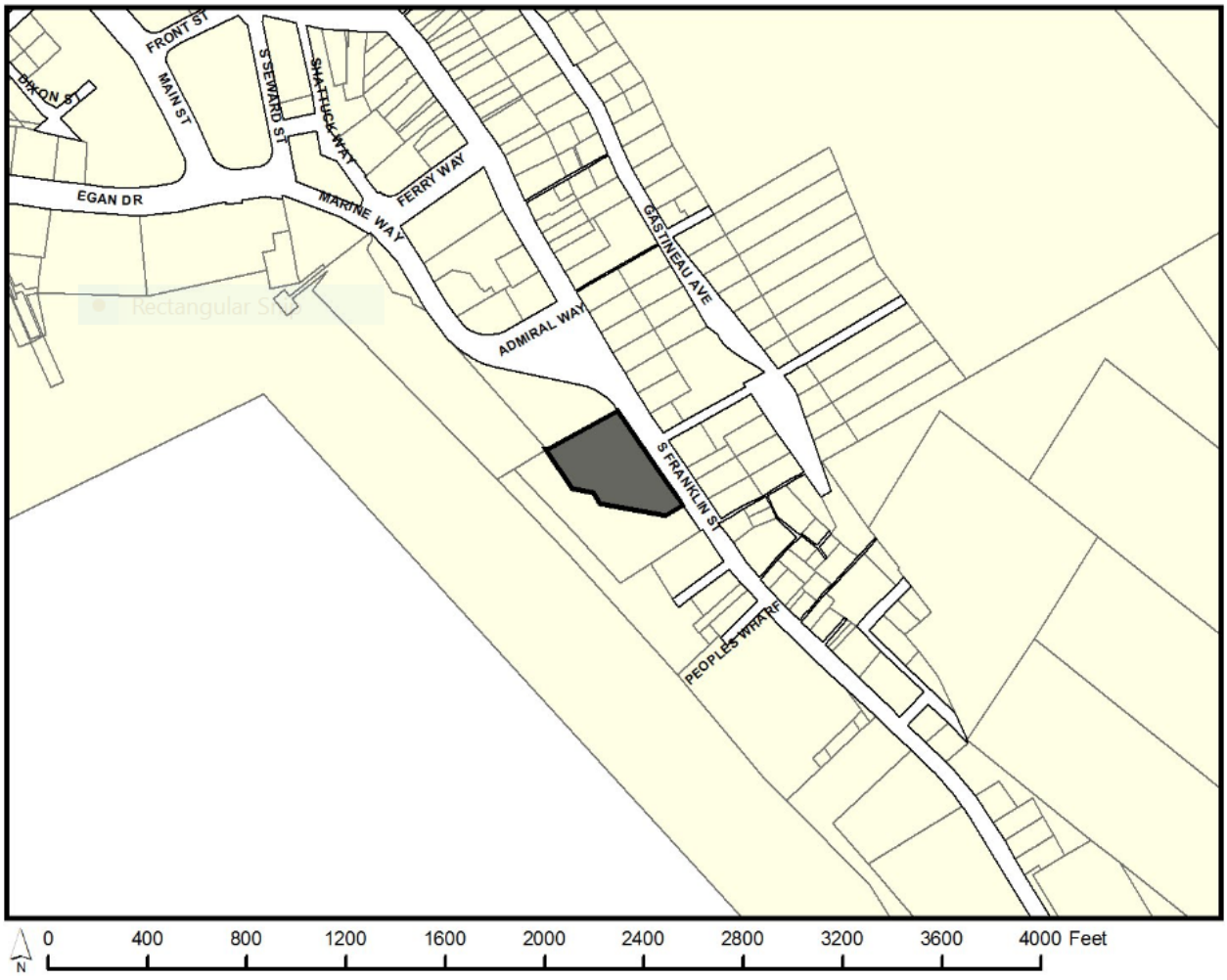

ATTACHMENTS

Attachment 1 Development Permit Application
Attachment 2 Variance Application
Attachment 3 Variance Project Narrative
Attachment 4 Site plan

Attachment 5 PD-1 and PD-2 Parking District Map
Attachment 6 Fee in-lieu of Parking District Map
Attachment 7 Subdivision plat 2019-19
Attachment 8 Flood Zone map
Attachment 9 Hazard Map Amendment Notice of Decision
Attachment 10 Public Comment

PROJECT DESCRIPTION

The applicant requests a variance to reduce the parking requirement from 80 spaces to zero spaces for a proposed two (2) two-story commercial mixed-used buildings on the downtown waterfront. This development is concurrently under review as USE2019 0021.

Because the leasing arrangements for the two buildings are not final, the applicant has provided two scenarios for building usage, Option A and Option B. The parking requirement and variance analysis is based on Option B with the highest parking requirement of 80 spaces, versus Option A which is 60 spaces. Parking requirements are listed in CBJ Code 49.40.210.

Per CBJ 49.40.210(a), the parking requirement of 80 off-street parking spaces, Option B, is based on the following calculation:

- Building A. 7,775 square feet retail (1 space/300 square feet); 7,534 square feet restaurant (1 space/200 square feet)
- Building B. 7,694 square feet retail; 7,669 square feet office (1 space/300 square feet)
- Subtotal: 114 off-street parking spaces
- Final Total: 80 off-street parking spaces, which includes a 30 percent reduction because the property is located in the PD-2 parking district (Attachment 5)

Option A with a parking requirement of 60 off-street parking spaces, which is not evaluated in this application but included for reference, is based on the following calculation:

- Building A. 7,775 square feet retail (1 space/300 square feet); 7,534 square feet storage (1 space/100 square feet)
- Building B. 7,694 square feet retail; 7,669 square feet office (1 space/300 square feet)
- Subtotal: 84 off-street parking spaces
- Final Total: 60 off-street parking spaces, which includes 30 percent reduction because the property is located in the PD-2 parking district (Attachment 5)

The applicant has also included the parking numbers for the PD-1 parking district, which allows a 60 percent parking reduction. Those numbers are 46 spaces for Option B and 34 spaces for Option A.

The parking plan must include a minimum of one loading space, and four accessible spaces as

required per CBJ 49.40.210(b) and (c). The Project Narrative and site plan includes one loading space on the southeast side of the development, and no accessible parking spaces as shown in Attachment 4.

BACKGROUND

The proposed development is concurrently under review as USE2019 0021. The USE staff report includes additional history regarding public meetings on the development and the adjacent CBJ transportation staging area and public restrooms. The CBJ facility was approved as USE201800015/CSP20180010 on November 15, 2018. The full background information is not repeated here because it is not relevant to the parking variance analysis.

ANALYSIS

In the Project Narrative, Attachment 3, the applicant has provided a number of reasons to justify the variance, including financial hardship, parking variances issued to neighboring properties, and conformance with Historic District Standards. These arguments are reviewed below, followed by a discussion of the hardship language in the Variance Criteria [CBJ 49.20.250(b)].

Neighboring Properties

The applicant has provided information on four properties in the PD-2 parking district considered to be similar to the Archipelago property, noting that in each case a variance was granted to reduce the parking requirement to the PD-1 standard. The PD-2 district allows a 30 percent parking reduction while PD-1 offers a 60 percent reduction. If the Archipelago development was granted a similar reduction to the PD-2 standard, the parking requirement would be 46 off-street parking spaces instead of 80. To be clear, this is the number based on Option A with the highest parking requirement, since final lease arrangements are unknown at this time.

The applicant has also explained that, while some customers and employees may arrive by bus, taxi, or ride-share, most of the customers and employees associated with retail establishments in this vicinity arrive by foot; these arguments have been used as justification for variances in the past. The applicant argues that the Archipelago Center's nearest competitors will be similar retail businesses that did not have to provide parking when they were built.

Staff notes that these variances were granted before the variance criteria were substantially revised in the CBJ Land Use Code in 2018. The existing non-administrative variance ordinance states that the property must have unusual or special conditions existing on the property, and that these conditions may not be created nor caused by the person seeking the variance. Furthermore, the variance goes with the land, not the use.

Because the criteria have changed, staff has not researched these cases in entirety. It appears that in the variances granted throughout the mid-1990s to the early 2000s that staff reviewed, the applicants were frequently granted approval to reduce the parking requirement from the PD-2 standard to the PD-1 standard. (Records do not indicate variances of this type in recent years.) The Board of Adjustment's decisions gave consideration of the following alternatives or mitigation to off-street parking requirements including:

- Extend the distance that off-street parking could be created to a distance greater than 500 feet (500 feet is the current distance permitted);
- Share loading spaces with adjacent property;
- Provide shuttle service for employees;
- Provide on-site covered and secured bicycle storage;
- Require early morning deliveries; and
- If in the future a fee-in-lieu option became available, CBJ was authorized in at least one variance to have the applicant participate in the program (VAR2006-00031 approved September 27, 2006). Staff notes that the Downtown Fee-in-Lieu of Parking District Map was adopted October 30, 2006.

The applicant states that requiring 46 off-street spaces under the PD-1 standard is also impractical, and would negatively impact the character of the Historic District and its pedestrian orientation. The Historic District extends into the first 40 feet of the property from the sidewalk. Historic District Standards and Guidelines (04 CBJAC 080) will be addressed in a later section.

Financial Hardship

Fee-in-lieu of parking is an option in both the PD-1 and PD-2 Parking Districts. The current fee-in-lieu rate is $10,805 for a commercial parking space. The established parking requirement of 80 spaces could therefore be addressed with an $864,400 fee-in-lieu payment. At the PD-1 adjustment to 46 off-street spaces, this figure would be $497,030.

The applicant states that this option is "onerous and discriminatory." The applicant, however, has not reviewed options for reducing the size of the buildings, or reconfiguring the shape of the buildings, to allow for any number of off-street parking spaces. Such options could allow some level of accommodation for the parking requirement. For example, if the applicant accommodated 10 off-street parking spaces on site, the fee-in-lieu payment would be reduced to $756,350, or $388,980 if the PD-1 adjustment was used. The applicant has not offered any site plan adjustments to address parking requirements or to reduce fee-in-lieu payments. The Variance criteria interpretation of hardship will be addressed in the final section of the analysis.

Other Options Considered

The applicant describes other options in the Project Narrative. CBJ Code allows parking

requirements to be met on off-site locations within 500 feet of the site. According to the applicant, no off-site locations are available for the Archipelago development. The applicant also notes that shuttle services to other off-site locations have been previously approved. The applicant questions whether those shuttle services are currently operating. Again, staff has not researched those developments because the information is not relevant to the current Variance criteria. As previously noted, the applicant has not reviewed options for reducing the size of the buildings, or reconfiguring the site layout, to allow any off-street parking spaces. The Variance request is for zero off-street parking spaces, except for the loading zone.

The applicant has also argued that, because the property does not directly abut the shoreline (a section of CBJ property follows the western edge along the waterfront), the site is improperly zoned Waterfront Commercial, should be part of the MU (Mixed Use) zoning district instead, and therefore should be regulated differently. The applicant states that the special condition of the property is the Waterfront Commercial zoning in the Mixed Use environment.

Pre-application notes from the Conditional Use Permit show that the applicant considered applying for a re-zone of the property to address this concern, but did not complete the rezone application in either the July or January application periods. The parking requirements for Mixed Use and Waterfront Commercial, however, are the same; CBJ Code 49.40.210 does not distinguish between zoning districts, only use.

Downtown Historic District Standards and Guidelines

The applicant cites the expectation to comply with Downtown Historic District Standards and Guidelines as an impediment to compliance with parking standards, and specifically states that the parking requirement is inconsistent with Historic District standards. Historic District standards, however, do not include parking requirements, only recommendations and guidelines regarding placement and screening. These recommendations are noted in Chapter 7, Design Guidelines for New Construction. The guidelines recommend that development should "*maintain the alignment of buildings at the sidewalk edge and that street facades should span lot widths.*" Chapter 9, Design Guidelines for Parking Facilities, further states that "surface parking should be located in the interior of a block whenever possible" and recommends a visual buffer where surface lots abut sidewalks. Again, these are guidelines and do not supersede the specific requirements of the CBJ Land Use Code.

The site plan and the applicant's Conditional Use Permit Project Narrative demonstrate that the applicant has followed these setback guidelines only when possible, as shown with the zero foot front setback for Building B. The front setback for Building A, as well as the side yard setbacks and rear-yard setback, all follow the Waterfront Commercial setback requirements of 10 feet.

The Downtown Historic District Standards and Guidelines are not unique to the subject property. Historic District standards are recommendations and not requirements. Finally, the applicant has

not followed these standards except for the Building B zero-foot front setback.

Hazard Designations

The flood zone map in Attachment 8 indicates that the property is adjacent to a Velocity flood zone, but not located within one. A small portion of the development is located seaward of the mean high water line. FEMA and CBJ regulations (CBJ 49.70.400) prohibit habitable development seaward of the mean high water line, using the FEMA definition of development. This restriction prohibits development on a small area of the property estimated by the applicant to be 759 square feet. Furthermore, most, if not all, of this area lies within the 10-foot rear yard setback where structures are already prohibited. While a full survey of the mean high water line is not available for all downtown properties, it is reasonable to assume that the mean high water line extends at least partially into most waterfront (and waterfront adjacent) properties in some amount. This restriction is therefore not unusual, and in this particular situation affects only a small portion of the property.

In addition, the property was originally located within a Moderate Hazard Zone. Development in Moderate Hazard zones come with additional development restrictions, due to the risk to life and safety from landslides and avalanches. This designation, however, was eliminated through the Hazard Map amendment process (case AME2018 0010 with a Notice of Decision issued on August 14, 2018, Attachment 9.)

Non-Administrative Variance Criteria on Hardship [CBJ 49.20.250(b)]

A Variance is an allowance to violate a law. A Variance excuses a landowner from having to comply with zoning regulations that other landowners in the same zoning district must abide by. The Variance criteria emphasize that the deviation from code requirements must be based on undue hardship resulting from **unusual or special conditions of the property**, and the unusual conditions must not be created by the property owner.

A hardship exists when it is unusually difficult for a landowner to comply with regulations because of the peculiarity of the property. In order to justify granting a variance, an undue hardship must first be found to exist, and secondly the variance must be narrowly tailored to relieve that hardship and nothing more.

The proposed development is located on a flat lot of 33,875 square feet within the Waterfront Commercial zoning district. The development meets the lot width and lot depth requirements for the district, and greatly exceeds the minimum lot size of 2,000 square feet. The lot was created in 2019 as shown in Attachment 7. As described previously, the lot is not within any hazard zones and has no remarkable features.

Financial hardship is not considered an undue hardship in this case because it is not tied to

unusual or special conditions of the property. The variance is focused on the land and its physical features because a variance runs with the land.

In addition, no evidence indicates that the applicant has tailored the variance to relieve the stated financial hardship. The applicant has not adjusted the building size or configuration to provide any parking on-site, nor has the applicant offered any fee-in-lieu payment to cover any number of parking spaces. This presumes that the fee-in-lieu option of paying for one parking space at $10,805 is considered a financial hardship, as well as the fee of $864,400 to compensate for all spaces, or $497,030 spaces at the PD-1 parking reduction of 60 percent.

Variance Criteria on Public Health, Safety, and Welfare

The variance criteria require a determination of whether the Variance will be detrimental to the public health, safety, and welfare.

The PD-2 Parking District, with its 30 percent reduction in the off-street parking requirement, is an acknowledgment that developments in these areas are served by employees who are likely to live downtown, and used by customers who primarily arrive by cruise ships. The adjacent PD-1 Parking District, with a 60 percent reduction in the off-street parking requirement, follows this same rationale to a greater degree.

The applicant has made the argument, without supporting evidence, that its employees and customers arrive by foot or by transit. This argument for a reduction in the parking requirement, however, has already been addressed in the PD-2 Parking District requirements.

Fee-in-lieu of parking payments, currently at $10,805 per commercial space, support parking infrastructure and transit improvements to both provide for more parking and to reduce the demand for it. The applicant has not offered a fee-in-lieu payment of any amount to offset potential impacts.

Parking lots on the waterfront may have detrimental aesthetic effects without adequate visual screening. Parking lots also discourage alternative transit methods for customers and employees and may add to congestion. At the same time, many residents and businesses perceive downtown Juneau to have a significant parking problem. Downtown residents complain of summer tourist employees parking in their neighborhoods, while businesses complain of inadequate parking for their stores. The 2013 Juneau Comprehensive Plan contains both policies that promote additional off-street parking as well as policies that promote pedestrian movement and discourage parking expansion.

The proposed variance to zero parking is likely to have some detrimental impact in neighborhoods by pushing employees and customers to park in surrounding areas. The applicant states that variances granted (under the previous ordinance) justified the reduction from the PD-

2 standard to the PD-1 standard by allowing the applicants to shuttle employees, or by assuming that customers would be pedestrians. Such mitigation has proven difficult to enforce, and CBJ cannot mandate that customers and employees arrive by foot. A lesser variance, which reduces the parking standard but does not eliminate the requirement (for example, PD-2 to PD-1), combined with fee-in-lieu payment may offset this impact. As proposed with zero parking, the variance may be detrimental to public welfare and may negatively impact surrounding properties.

AGENCY AND PUBLIC COMMENT

No agency comments were received on the Variance during the agency review period conducted from October 14 to October 30, 2019.

One public comment has been recent to date, from a resident opposed to the variance (Attachment 10). The resident states this his family and friends avoid downtown during the tourist season because of the lack of street parking.

VARIANCE REQUIREMENTS

Pursuant to CBJ 49.20.200, a variance may be granted to provide an applicant relief from the requirements of this title. A variance is prohibited from varying any requirement or regulation of this title concerning the use of land or structures, housing density, lot area, requirements in chapter 49.35, or requirements in chapter 49.65.

A non-administrative variance may be granted to provide an applicant relief from requirements of this title after the prescribed hearing and after the Board of Adjustment has determined that:

1. Enforcement of the ordinance would create an undue hardship resulting from the unusual or special conditions of the property;
2. The unusual or special conditions of the property are not caused by the person seeking the variance;
3. The grant of the variance is not detrimental to public health, safety, or welfare; and
4. The grant of the variance is narrowly tailored to relieve the hardship.

Pursuant to CBJ 49.20.260, the board may attach to a variance conditions regarding the location, character, and other features of the proposed structures or uses as it finds necessary to carry out the intent of this title and to protect the public interest.

FINDINGS

1. Is the application for the requested variance complete?

Yes. Staff finds the application contains the information necessary to conduct full review of the proposed operations. The application submittal by the applicant, including the appropriate fees, substantially conforms to the requirements of CBJ Chapter 49.15.

Criterion 1 is met.

2. Does the variance as requested, meet the criteria of Section 49.20.250, Grounds for Variances?

a. Enforcement of the ordinance would create an undue hardship resulting from the unusual or special conditions of the property;

No. Based on the preceding analysis, no evidence indicates that enforcement of the ordinance would create an undue hardship resulting from the unusual or special conditions of the property. The property is a flat waterfront lot that meets and exceeds minimum dimensional standards for the Waterfront Commercial zoning district. There are no unusual or special conditions on the property, therefore there are no undue hardships resulting from these conditions.

Criterion 2A is not met.

b. The unusual or special conditions of the property are not caused by the person seeking the variance;

No. As noted previously, there are no unusual or special conditions on the property. Further, the property is located in the PD-2 Parking District and Fee-in-Lieu Parking District, which offer relaxation of the off-street parking requirements.

Criterion 2B is not met.

c. The grant of the variance is not detrimental to public health, safety, or welfare; and

No. Based on the preceding analysis, a grant of the variance for a zero parking requirement, combined with no fee-in-lieu requirement or other type of parking mitigation, may be detrimental to the public health, safety, or welfare by pushing employees or customers of the

development to park in surrounding neighborhoods.

Criterion 2C is not met.

d. The grant of the variance is narrowly tailored to relieve the hardship.

No. There is no hardship resulting from usual or special conditions on the property. Furthermore, as described in the preceding analysis, the proposed variance is a request to reduce the parking requirement to zero and is therefore not narrowly tailored to relieve any hardship.

Criterion 2D is not met.

RECOMMENDATION

Staff recommends that the Board of Adjustment adopt the Director's analysis and findings and deny the requested variance, VAR2019 0005. If the Board elects to amend the findings and approve the requested variance, the variance would allow a reduction of the off-street parking requirement to zero in association with USE2019 0021, a proposed two (2) two-story commercial mixed-use development

City & Borough of Juneau
Alaska's Capital City

BUILDING PERMIT

Permit No.
BLD20190145

* NOTE: "Building Permit" is a generic term which includes Building Safety Inspection, Grading Permits, and permits for Electrical, Plumbing and Mechanical work.

Your special attention is called to the following:

This permit is granted on the express conditions that the construction shall, in all respects, conform to the ordinances of the City and Borough of Juneau. It may be revoked at any time upon violation of any of said ordinances.

The granting of this permit does not authorize the violation of any federal, state or local law regulating construction for the violation of the terms of any deed or covenent or any zoning or other regulation.

If plan review was required, this permit must be attached to the approved drawings. The permit, plans and record of inspections must be available on site at all times while the construction is in progress and before final inspection.

The yellow posting notice must be prominently displayed to show a permit has been issued and to assist the inspectors in location of the project. This permit becomes null and void if work or construction authorized is not commenced within one year or if work or construction is suspended or abandoned for a period of one year at any time after work has commenced.

Note: City Ordinances REQUIRE a Final Inspection be approved for every Building Permit.

Inspections

Inspections can be arranged by telephoning **586-1703** or by written or faxed notification.
The Online Building Inspection Request Form is at: **www.juneau.org/permits/inspect_request.php.**
Work shall not proceed until the inspector has approved the various stages of construction. An approved Final Inspection is required.
Call before 7:00 AM for same day inspections.
Please provide the following information: 1 Permit Number, 2 Address, 3 Type of Inspection, 4 Date and Time and 5 Contact Name and Phone Number.

Job Address: **356 S FRANKLIN ST**
Permit Number: **BLD20190145**
Project Description: Grading permit

Issued Date : **04/12/2019**
Parcel No: **1C070K830036**

Parcel Information : ARCHIPELAGO LT 1

Setbacks: Zone: WC:
Front: 10.00 Ft. NE
Rear: 10.00 Ft. SW
Street Side: 10.00 Ft.
Side 1: 10.00 Ft. NW
Side 2: 10.00 Ft. SE

Comments:

Owner : ARCHIPELAGO PROPERTIES LLC
ATTN TAX DEPT
725 BROAD ST
AUGUSTA GA 30901

Applicant : TRUCANO CONSTRUCTION
3560 N DOUGLAS HWY
JUNEAU AK 99801

Fee Type	Date	Receipt	Amount Paid
BLD- Grading Plan Review	04/04/2019	56285	$54.00
BLD- Grading Permit Fee	04/04/2019	56285	$68.50
		Total Fees Paid:	$122.50

Valuation for Permit Fee Calculations:

S.F.	Type	Rate	Amount
		Total Valuation:	$0.00

Project Conditions and Holds:

Special Condition - All utilities within the private property shall be located by the land owner and or the private contractor, and shall be the responsibilty of the land owner.

Custom - NO fill is permitted within the VE flood zone.

Inspections Required: Call for inspection before covering or concealing any of the work described below. Inspections may be combined.
E-Grading/Drainage
E-General Engineering Final

JUNEAU PERMIT CENTER - 230 S. Franklin Street - 4th Floor, Marine View Center - Mail: 155 S. Seward Street, Juneau, AK 99801
Phone: 586-0770 - FAX: 586-3365 - Inspection Requests: 586-1703 - Email: permits@ci.juneau.ak.us
Web Site: www.juneau.org/permits

Staff Review Sheet

Permit Intake Initials: AS

FIRE ZONE ENG WAT SEW ARCH STRUC PLUM MECH ELEC ACCESS SPECINSP

Planner LEB

4/4/2019

Case No: **BLD20190145**

Site Address: 356 S FRANKLIN ST

Parcel No: 1C070K830036

Desc: Grading permit

Commercial GRD

FCC Code: ?

Type of Construction: ____

New Dwelling Units: 0

Existing Dwelling Units: 0

Occupancy Class: ____

Sprinkler Substitute for Type A Construction: YES NO

Sprinkler System: FULL PARTIAL NONE Required: YES NO

Alarm System: FULL PARTIAL NONE Required: YES NO

Code Edition: ____ Code Review by: ____ Date: ____

Valuation for Permit Fee Calculations:

S.F.	Type	Rate	Amount

Total Valuation: $0.00

LAND USE

ZONE/UNITS WC /

WETLAND

FLOOD ELEV 25.00

FIRM ZONE VE Bach 1/2 of lot

FIRM MAP

LOT SIZE 43,508 SF

1.0 ACRES

SETBACKS

Front 10 NE

Rear 10 SW

Side 10 NW/SE

Other

PARKING

ANADROMOUS

EAGLES NEST

Coverage ____ Permissible/Conditional

HEIGHT ____ Permissible/Accessory

VEGETATION

HAZARD

ENGINEERING/PUB WORKS

Dwelling Units: ____

CITY WATER:

Permit #: ____

Use: ____

Assessment: ____

Service Size: ____

Line Size: ____

Meter Size: ____

CITY SEWER:

Permit #: ____

Use: ____

Assessment: ____

Fixture Units: ____

LAND USE PERMITS

ADR Case #: ____

PLAN REVIEW APPROVALS

	Initials	Date
__ Fire		
__ Zoning	LEB	4/12/19
__ Engineering	MAM	4/8/19
__ Water		
__ Sewer		
__ Architectural		
__ Structural		
__ Plumbing		
__ Mechanical		
__ Electrical		
__ Access		
__ Spcl Insp Form		

APPROVED FOR ISSUANCE

Signature

4/12/19

Date

PERMIT ISSUANCE FEES

__ Grading Plan Review Fee $____

__ Adjusted Plan Review Fee $____

__ Fast Track Fee $____

__ Early Start Fee $____

__ Building Permit Fee $____

__ Water Assessment Fee $____

__ Sewer Assessment Fee $____

__ Sewer Inspection Fee $____

__ Grading Permit Fee $____

__ Driveway Permit Fee $____

__ Bond for ____ $____

__ Other ____ $____

Total Issuance Fees $____

PERMIT ISSUANCE PAYMENTS

Date	Receipt	Check	Amount
			$
			$
			$

Parcel Tags:

5/2/16 TJF - VAR2011-0004 allows 0ft setback on NW property line for food carts.

CONDITIONS AND HOLDS ON PERMIT: (Continued on back of sheet)

NO Fill is permitted within the VE Flood zone.

BUILDING PERMIT APPLICATION (Continued)

TYPES OF INSPECTIONS

The Work Codes below contain standard inspections for the permit type. Circle additional inspections if required.

Work Codes -
B-Building Safety Inspection
B-Commercial Addition
B-Demolition
B-Grading
B-Manufactured Home Placement
B-Oil/Gas Piping
B-Porches/Decks/Carports
B-Reroof
B-Residential Electrical Service
B-Single Family Dwelling
E-ROW- Water & Sewer Service
E-ROW- Water Main
E-ROW-Driveway
E-ROW-Fire Line
E-ROW-Sewer Main
E-ROW-Sewer Main & Service
E-ROW-Sewer Service
E-ROW-Water Main & Service
E-ROW-Water Main & Sewer Main
E-ROW-Water Service
E-UTL- Sewer Main
E-UTL-Fire Line
E-UTL-Fire Line & Water Line
E-UTL-Fire Line & Water Main
E-UTL-OWTDS
E-UTL-Sewer Line
E-UTL-Pressure Sewer Line
E-UTL-Sewer Line w/ Decomm
E-UTL-Pressure Sewer Line w/Decom
E-UTL-Water Line
E-UTL-Water Main

Building-
B-Appliance/Chimney
B-Bonding
B-Building Final
B-Building Service
B-Combustion Air
B-Commercial Hoods
B-Conduit & Raceway Systems
B-Cross Connection Control
B-Demo Electric Safed Off
B-Demo Excavation Filled
B-Demo Sewer/Water Capped
B-Demolition Final
B-Devices and Equipment
B-Electrical Final
B-Fire Dampers/Sprinklers
B-Fire Separation/Rated Assemb
B-Foundation, Forms & Reinf Steel
B-Framing
B-Grounding
B-Heat Piping
B-Insulation/Vapor Barrier
B-Masonry
B-Mechanical Final
B-Meter Yoke
B-Meter Yoke with Meter
B-MH Foundation
B-MH Utilities
B-Mobile Home Final
B-Plumbing Final
B-Oil & Gas Piping/Tanks
B-Rough Electrical
B-Rough Plumbing
B-Service/Panel
B-Setback Verification
B-Smoke/Carbon Monoxide Detec
B-Special Inspection
B-Specialty Piping
B-Temporary Power
B-Under Slab Utilities
B-Ventilation/Plenums & Ducts
B-Vents (Bath, Dryer, Kitchen, etc.)
B-Yellow Tag Electrical
B-Zoning Final

Enforcement -
ENF - Enforcement Status Check

Miscellaneous -
M-Site Visit

Fire -
F-Address and Required Signage
F-Alarm Panel/Transmitter
F-Alarm Zones
F-Blasting on Individual Lot
F-Childcare/Daycare Inspection
F-Commercial Dev Land Clearing
F-Courtesy Inspection
F-Emergency Lighting Test
F-Events in Mall Hallways
F-Explosives Shipment-Unest Loc
F-FDC Location
F-Fire Extinguishers
F-Fire Final
F-Fire Hydrant Placement
F-Fire Related Inspection
F-Fixed Welding Inspection
F-Flammable/Combustible Material
F-Hazardous Material Storage
F-Kitchen Hood Suppression Test
F-Liquor License Renewal
F-Open Burning Inspection
F-Paint Booth Inspection
F-Proper Sprinkler System Bracing
F-Roof/Tar Kettle Inspection
F-Special Event Structure
F-Sprinkler Head Placement
F-Sprinkler Hydrostatic Test
F-Subdivision Land Clearing
F-Subdivision/Road Blasting
F-System Acceptance Test
F-Temporary Welding Inspection
F-Underground Fire Line Flush

Engineering -
E-Access to Curb Stop Valve
E-ADEC on-site Sewer Final
E-ADEC on-site Water Main Final
E-Asbuilt Survey Required
E-Bacteriological Test
E-Bedding / Backfill
E-Billing Authorization
E-Blasting Verification
E-Bore Flush
E-CBJ Waste Water Department
E-CBJ Water Department
E-Chlorination Test
E-Cleanouts
E-Continuity
E-Cross Connection Control
E-Culvert
E-Curb Box
E-Curb Cut Final
E-Curb Cut Reinforcement
E-Curb Stop
E-Depth
E-Electrical Utility
E-Final
E-Fire Hydrants
E-Fire Line Final
E-General Engineering Final
E-Grade
E-Grading/Drainage
E-Headwalls
E-Installation of Access & Ports
E-Installation of Insulation
E-Location
E-Manhole Tap
E-Manholes - Sewer Main
E-Material
E-OWTDS Inspection
E-Pressure Test
E-Pump Ticket
E-Residual / Free Chlorine
E-Retaining Walls
E-ROW - Final
E-ROW Restoration
E-Septic Decommission
E-Sewer Connection
E-Sewer Disconnect
E-Sewer Final
E-Sewer Main Final
E-Sewer Service Tap
E-Sewer System
E-Sidewalk Final
E-Sidewalk Reinforcement
E-Size
E-Soil
E-State D.O.T. Approval
E-Storm Drains
E-Street Patch
E-Streets
E-Telephone Utility
E-Thaw Waiver
E-Thaw Wire
E-Thrust Blocks
E-Turn Water OFF
E-Turn Water ON
E-TV Cable
E-Utility Ribbon
E-Utility Trench
E-Water Final
E-Water Meter Required
E-Water Meter/Yoke
E-Water Service Tap
E-Water System
E-Water Tap
E-Width

ADDITIONAL CONDITIONS AND HOLDS (STAFF)

City & Borough of Juneau
Alaska's Capital City

Application Date: **April 4, 2019**

BUILDING PERMIT APPLICATION

NOTE: THIS IS NOT A BUILDING PERMIT

* NOTE: "Building Permit" is a generic term which includes Building Safety Inspections, Grading Permits, and permits for Electrical, Plumbing and Mechanical work.

Case No: **BLD20190145**

Case Description: Grading permit

Site Address: **356 S FRANKLIN ST**

Parcel No: 1C070K830036

Legal Description: ARCHIPELAGO LT 1

Check No. of Existing Dwelling Units:

No. of New Dwelling Units: 0

No. of Removed Dwelling Units: 0

Applicant : TRUCANO CONSTRUCTION
3560 N DOUGLAS HWY
JUNEAU AK 99801

e-mail: trucano@alaska.com

PH1 586-2444
CEL 321-2680

Owner: ARCHIPELAGO PROPERTIES LLC
ATTN TAX DEPT
725 BROAD ST
AUGUSTA GA 30901

PH: _____ FAX _____

Contractor: TRUCANO CONSTRUCTION
3560 N DOUGLAS HWY
JUNEAU AK 99801

Valuation for Permit Fee Calculations:

S.F.	Type	Rate	Amount
	Total Valuation:		$0.00

Associated Cases:

None.

Parcel Tags:

5/2/16 TJF - VAR2011-0004 allows 0ft setback on NW property line for food carts.

Notes and Conditions:

Jeff S. — 4-4-19 — AS

Applicant's Signature (Owner, Contractor or Authorized Agent) — **Date** — Staff Acceptance

I hereby certify that I have read and examined this application and know the same to be true and correct. I further certify that all provisions of laws and ordinances governing this type of work will be complied with whether specified herein or not. I understand that the granting of a permit does not presume to give authority to violate or cancel the provisions of any other federal, state or local law regulating construction or the performance of construction.

JUNEAU PERMIT CENTER - 230 S. Franklin Street - 4th Floor, Marine View Center - Mail: 155 S. Seward Street, Juneau, AK 99801
Phone: 586-0770 - FAX: 586-3365 - Inspection Requests: 586-1703 - Email: permits@ci.juneau.ak.us
Web Page: HTTP://WWW.JUNEAU.ORG/PERMITS

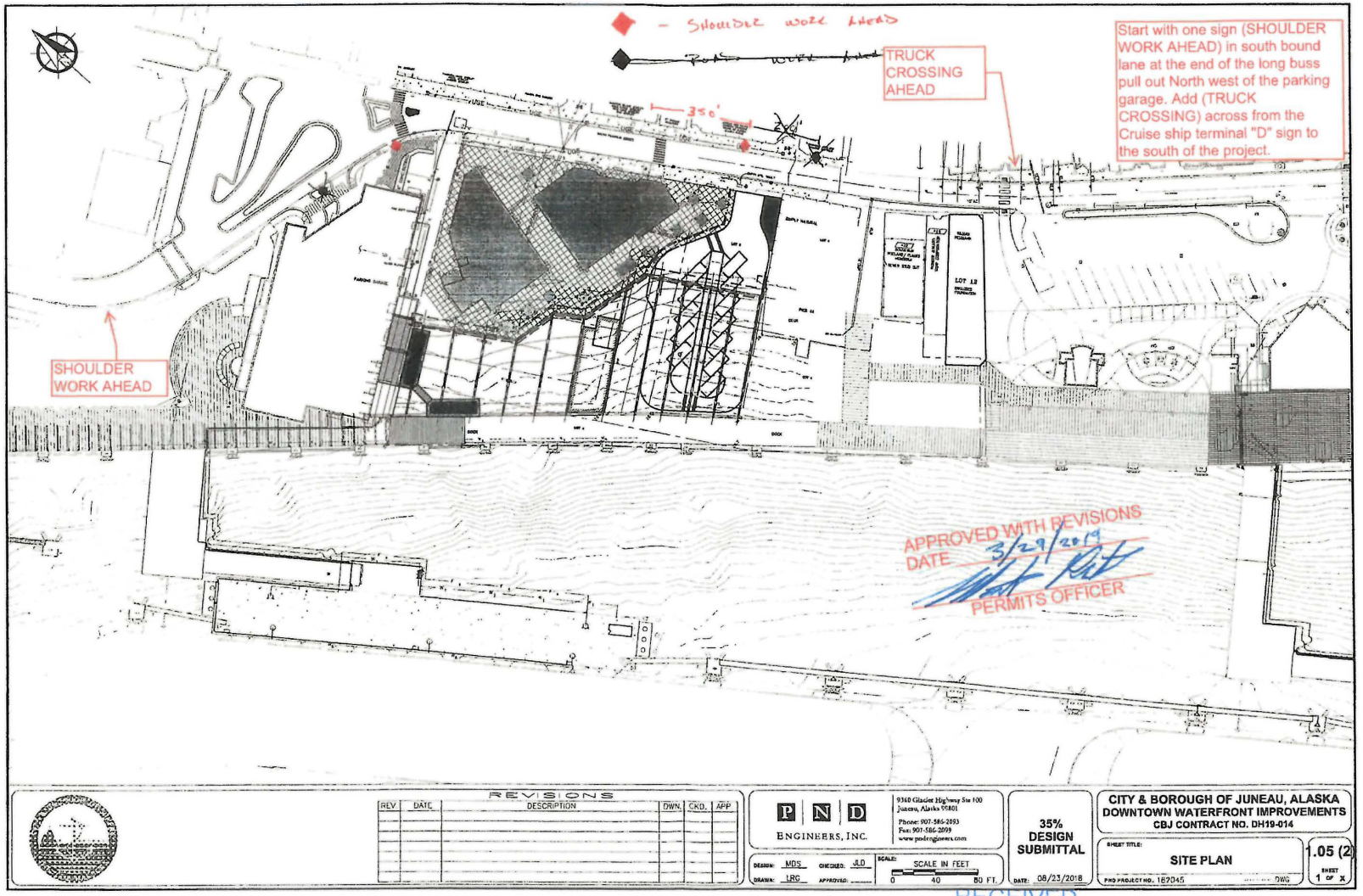

RECEIVED

APR 04 2019

PERMIT CENTER/CDD

BLD19-145

Attachment F – BLD2019-0145

Erosion Control Plan

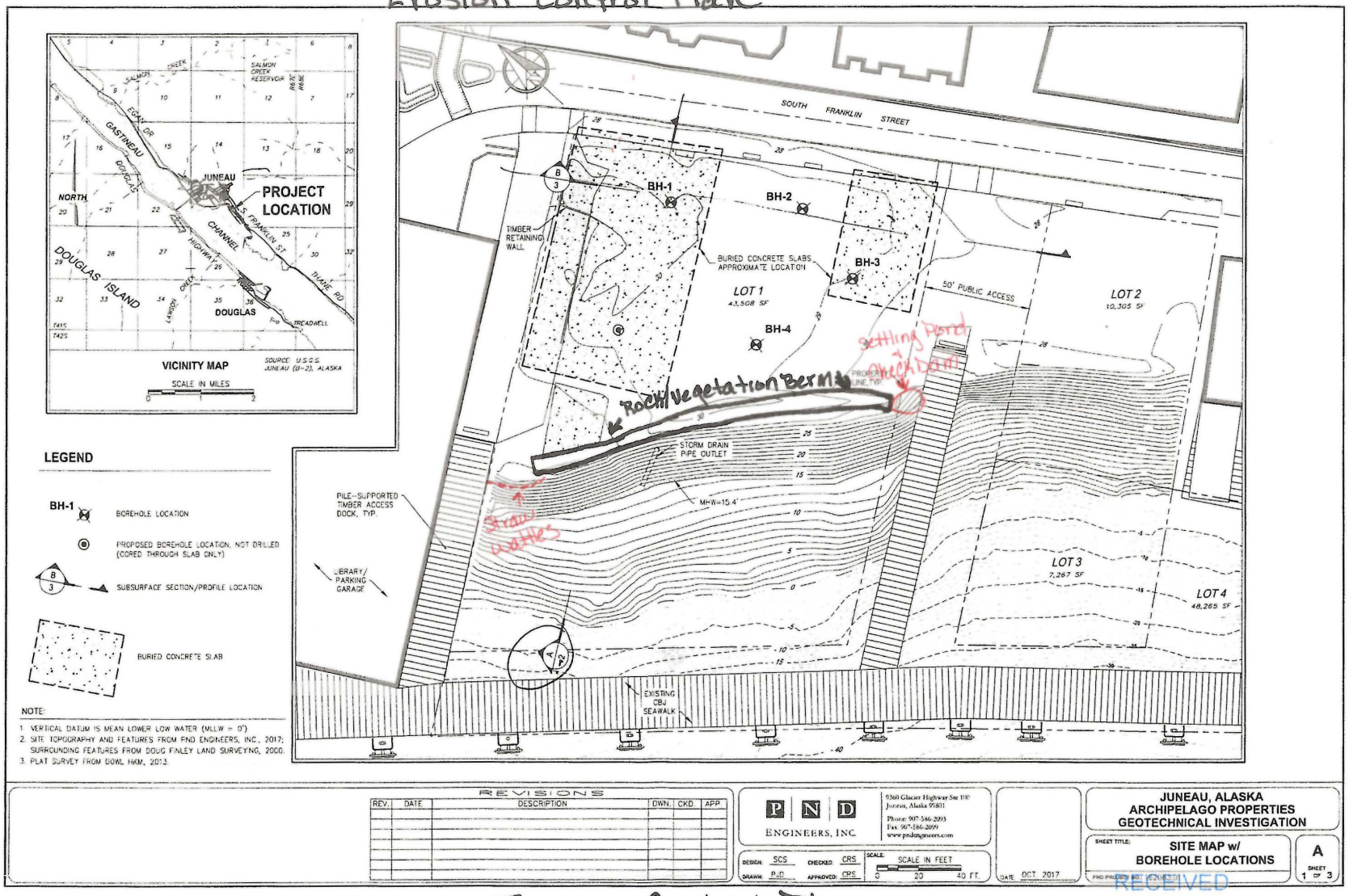

Erosion Control Plan

RECEIVED
APR 04 2019
PERMIT CENTER/CDD
BLD19-145


PANEL
02110C1567D
Eff 8/19/2013
AREA OF MINIMAL FLOOD HAZARD
Fill in
No adding
the Floodzone

CITY AND BOROUGH OF JUNEAU
ALASKA'S CAPITAL CITY
COMMUNITY DEVELOPMENT

INSPECTION REPORT

CITY & BOROUGH OF JUNEAU BUILDING DIVISION
4TH FLOOR MARINE VIEW BUILDING, 230 S. FRANKLIN ST.
MAIL: 155 SOUTH SEWARD STREET, JUNEAU, AK 99801
MAIN PHONE: 586-0770 ***INSPECTION REQUEST LINE:*** 586-1703
ONLINE INSPECTION REQUEST FORM: https://beta.juneau.org/?p=1994

PERMIT NO. _____ **DATE** _____ **TIME** _____

- ☐ FOOTING
- ☐ STEM WALLS
- ☐ SLAB
- ☐ UNDERSLAB (Plumbing/Electrical)
- ☐ TEMPORARY POWER
- ☐ FRAME
- ☐ ELECTRICAL
- ☐ PLUMBING
- ☐ INSULATION
- ☐ MECHANICAL
- ☐ WOODSTOVE
- ☐ CROSS CONNECTION CONTROL
- ☐ OIL & GAS PIPING/TANKS
- ☐ DRIVEWAY
- ☐ WATERLINE
- ☐ SEWER
- ☐ GRADING/DRAINAGE
- ☐ ROOF
- ☐ FINAL
- ☐ _____

OWNER/CONTRACTOR _____

ADDRESS _____

PERMIT TYPE _____ **INSPECTION CODE** _____

☐ **CALL FOR REINSPECTION BEFORE CONCEALMENT**

☐ **CORRECTIONS OF ITEMS NOTED ABOVE WILL BE REINSPECTED AT TIME OF NEXT REQUESTED INSPECTION**

INSPECTOR: _____

CERTIFICATE OF LIABILITY INSURANCE

DATE (MM/DD/YYYY): 1/15/2019

THIS CERTIFICATE IS ISSUED AS A MATTER OF INFORMATION ONLY AND CONFERS NO RIGHTS UPON THE CERTIFICATE HOLDER. THIS CERTIFICATE DOES NOT AFFIRMATIVELY OR NEGATIVELY AMEND, EXTEND OR ALTER THE COVERAGE AFFORDED BY THE POLICIES BELOW. THIS CERTIFICATE OF INSURANCE DOES NOT CONSTITUTE A CONTRACT BETWEEN THE ISSUING INSURER(S), AUTHORIZED REPRESENTATIVE OR PRODUCER, AND THE CERTIFICATE HOLDER.

IMPORTANT: If the certificate holder is an ADDITIONAL INSURED, the policy(ies) must be endorsed. If SUBROGATION IS WAIVED, subject to the terms and conditions of the policy, certain policies may require an endorsement. A statement on this certificate does not confer rights to the certificate holder in lieu of such endorsement(s).

PRODUCER	CONTACT NAME: Debora Roberts
Shattuck and Grummett Insurance 301 Seward St. Juneau AK 99801	PHONE (A/C, No, Ext): (907)586-2414 FAX (A/C, No): (907)586-3770 E-MAIL ADDRESS: debbie@sginc.com
	INSURER(S) AFFORDING COVERAGE — NAIC #
	INSURER A: Alaska National Insurance Company
INSURED Trucano Construction Company, Inc.; Trucano Family Partnership 3560 N. Douglas Hwy. Juneau AK 99801	INSURER B: INSURER C: INSURER D: INSURER E: INSURER F:

COVERAGES — CERTIFICATE NUMBER: 19/20 GL, AU, WC — REVISION NUMBER:

THIS IS TO CERTIFY THAT THE POLICIES OF INSURANCE LISTED BELOW HAVE BEEN ISSUED TO THE INSURED NAMED ABOVE FOR THE POLICY PERIOD INDICATED. NOTWITHSTANDING ANY REQUIREMENT, TERM OR CONDITION OF ANY CONTRACT OR OTHER DOCUMENT WITH RESPECT TO WHICH THIS CERTIFICATE MAY BE ISSUED OR MAY PERTAIN, THE INSURANCE AFFORDED BY THE POLICIES DESCRIBED HEREIN IS SUBJECT TO ALL THE TERMS, EXCLUSIONS AND CONDITIONS OF SUCH POLICIES. LIMITS SHOWN MAY HAVE BEEN REDUCED BY PAID CLAIMS.

INSR LTR	TYPE OF INSURANCE	ADDL INSD	SUBR WVD	POLICY NUMBER	POLICY EFF (MM/DD/YYYY)	POLICY EXP (MM/DD/YYYY)	LIMITS	
A	COMMERCIAL GENERAL LIABILITY CLAIMS-MADE [X] OCCUR [X] Liquor Liability GEN'L AGGREGATE LIMIT APPLIES PER: [X] POLICY [ ] PRO-JECT [ ] LOC [ ] OTHER:	X	Y	19ALS03427	1/1/2019	1/1/2020	EACH OCCURRENCE DAMAGE TO RENTED PREMISES (Ea occurrence) MED EXP (Any one person) PERSONAL & ADV INJURY GENERAL AGGREGATE PRODUCTS - COMP/OP AGG $	$ 1,000,000 $ 100,000 $ 5,000 $ 1,000,000 $ 3,000,000 $ 3,000,000 $
A	AUTOMOBILE LIABILITY [X] ANY AUTO [ ] ALL OWNED AUTOS [ ] SCHEDULED AUTOS [ ] HIRED AUTOS [ ] NON-OWNED AUTOS	X	Y	19AAS03427	1/1/2019	1/1/2020	COMBINED SINGLE LIMIT (Ea accident) BODILY INJURY (Per person) BODILY INJURY (Per accident) PROPERTY DAMAGE (Per accident) $	$ 2,000,000 $ $ $ $
	[ ] UMBRELLA LIAB [ ] OCCUR [ ] EXCESS LIAB [ ] CLAIMS-MADE [ ] DED [ ] RETENTION $						EACH OCCURRENCE AGGREGATE $	$ $ $
A	WORKERS COMPENSATION AND EMPLOYERS' LIABILITY ANY PROPRIETOR/PARTNER/EXECUTIVE OFFICER/MEMBER EXCLUDED? (Mandatory in NH) Y/N [ ] If yes, describe under DESCRIPTION OF OPERATIONS below	N/A	Y	19AWS03427	1/1/2019	1/1/2020	[X] PER STATUTE [ ] OTH-ER E.L. EACH ACCIDENT E.L. DISEASE - EA EMPLOYEE E.L. DISEASE - POLICY LIMIT	$ 1,000,000 $ 1,000,000 $ 1,000,000

DESCRIPTION OF OPERATIONS / LOCATIONS / VEHICLES (ACORD 101, Additional Remarks Schedule, may be attached if more space is required)

This Certificate is a representation of the named insured's coverage as of the date shown. Shattuck & Grummett Insurance makes no representation that these coverages comply with or fully satisfy any insurance or indemnity requirements in any contract, written, oral, or implied.

COPY

CERTIFICATE HOLDER

State of Alaska, D.O.T.P.F.
6860 Glacier Hwy.
Juneau, AK 99801

CANCELLATION

SHOULD ANY OF THE ABOVE DESCRIBED POLICIES BE CANCELLED BEFORE THE EXPIRATION DATE THEREOF, NOTICE WILL BE DELIVERED IN ACCORDANCE WITH THE POLICY PROVISIONS.

AUTHORIZED REPRESENTATIVE

John Grummett/DEBBIE

© 1988-2014 ACORD CORPORATION. All rights reserved.

Shoulder Work (Diagram #4)

Diagram No. 4 covers stationary (longer than 15 minutes in duration) work operations or parked equipment on the shoulder with no encroachment on the traveled way.

1. Vehicles should be parked as far off the roadway as practical.
2. It is recomended that a minimum of two signs be used regardless of posted speed.
3. Use beacon.
4. If equipment operation and activities are more than 15 feet from the edge of roadway signs and cones are not required.
5. If dust from the operation reduces the sight distance to less than 500 feet, use diagram No. 9

Roadway	A	B	C	Suggested Buffer
Urban	200	200	200	150 Ft.
Standard	500	500	500	350 ft.
Freeway	500-1000	800-1600	1300-2600	500 ft.

* Vehicles parked outside the improved shoulder with no work activity present do not require sign or cones. If less than 15 feet from the edge of roadway, cones or hazard marker is recommended.

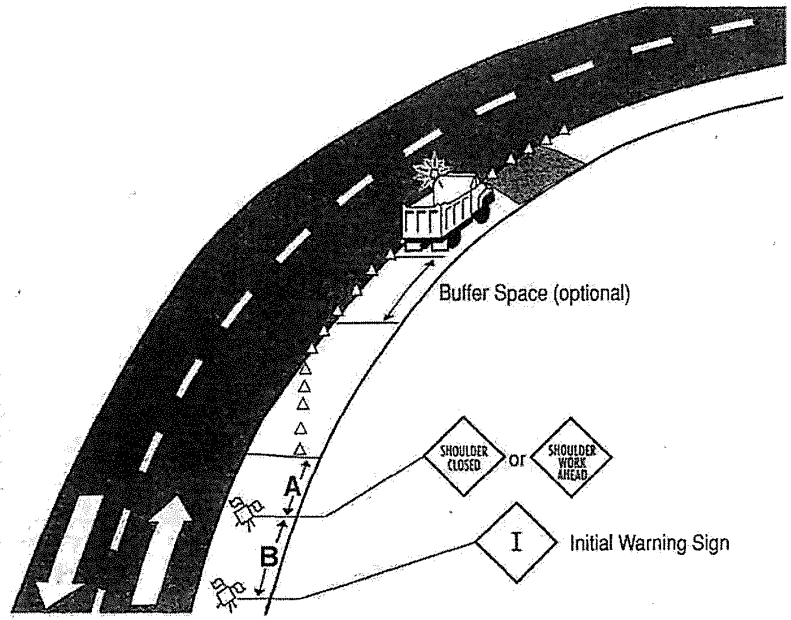

Diagram No. 4 — Shoulder Work

RECEIVED

APR 04 2019

PERMIT CENTER/CDD

BLD19-145

Permit No. 28964

State of Alaska

Department of Transportation and Public Facilities

Lane Closure Permit (LCP)

This permit allows the permittee to use a State owned highway Right of Way for access to, or construction and maintenance activities related to, physically contiguous land during construction, alteration, or maintenance improvements, or to allow access to utility facilities for which a permit has been issued.

Applicant:	**Trucano Construction**	
Mailing Address:	PO Box 020870	
	Juneau, AK 99802	
Contact Name:	Jeff Trucano	
E-mail Address:	trucano@alaskan.com	
Phone:	(907) 586-2444	Fax: (907) 463-3810

Traffic Control Provided by: Trucano Construction

Phone: (907) 586-2444 Fax: (907) 463-3810

24 hour Traffic Control contact person: Jeff Trucano

Phone: (907) 321-3988 Fax: _____

Permit activity location (includes all routes which will be affected):
356 South Franklin St. Juneau, AK If it is found that flaggers are needed to assist in traffic control, A Traffic Control Supervisor (TCS) with certificate of training must be on staff to oversee that work.

Reason for permit: Sidewalk removal/replacement in a DOT right of way. Trucks entering and leaving the roadway.

Start Date: 04/01/2019 End Date: 06/30/2019

Schedule details (start times, end times, days of the week, exceptions, continuous or daily operation):

Sidewalk removal/replacement will take place in the month of April, over the period of 1 week. Trucks will be making deliveries on and off for the entire duration. Working hours will be 7am - 5:30pm, Monday - Saturday.

Permittee upon signing this permit acknowledges and agrees to the following provisions:

PROVIDE EMERGENCY VEHICLE ACCESS AT ALL TIMES.

Permittee shall notify the following public agencies a minimum seven (7) days in advance: Municipal Traffic Engineer, Alaska State Troopers, Local Police, Fire Department, Emergency Medical Services, People Mover, School Bus Dispatch, Anchorage School District, and ADOT Traffic Control Engineer.

This Permit is not a property right but a temporary authorization, revocable by the State upon violation of any Permit terms. In addition, the State reserves the right to cancel this permit, for any reason, including emergencies, with advance notice. All reasonable attorney's fees and costs associated with legal or enforcement actions related to the terms and conditions of this permit will be borne by the permittee.

All signs installed in State rights of way shall be fabricated, located and installed in conformance with the Alaska Traffic Manual (ATM), Alaska Sign Design Manual (ASDS), and standard drawings and specifications. Our Traffic & Safety section shall approve all variable message signs (i.e. street name signs) prior to installation.

Implement the traffic control plan and maintain traffic control devices in accordance with the Alaska Traffic Manual and any provisions and conditions noted.

Permittee shall indemnify, defend and hold harmless the State, and its officers, employees, and contractors, from any and all claims or actions resulting from injury, death, loss, or damage sustained by any person or personal property resulting directly or indirectly from Permittee's use of or activities in the permitted area.

The Permittee will obtain all necessary Federal, State, and Municipal permits and licenses required by law, pay all taxes and special assessments lawfully imposed upon the permitted area, and pay other fees and charges assessed under applicable law.

If you damage any improvements within the state owned right of way, you will be responsible to return them to their previous condition. The Department's Maintenance and Operations section will inspect and approve the restored improvements. Improvements may include: pavement structures, sidewalks, curb and gutter, pathways, driveways, signs, traffic markings, guardrail, delineators, highway lighting systems, traffic signal systems, drainage structures and mailboxes.

If your permitted use interferes with the public's safety and/or use of facilities within State owned right of way, you will be directed to adjust or remove your traffic control.

A copy of this permit must be on site. If any of the conditions of this permit are violated, the State reserves the right to require the removal of all activities from the area.

All sign layouts shall conform to the Alaska Sign Design Specifications.

Fabricate special signs from type 8 or 9 orange fluorescent reflective sheeting on either sheet aluminum or plywood panels.

Adjust sign locations in the field to provide adequate separation from existing signs. All signs shall be visible.

Remove all traffic control devices when no longer needed.

Permittee shall clean up litter or debris generated as a result of this permit.

Obtain a letter of non-objection from the Contractor when your event crosses or parallels an active construction project. A list of active construction projects is at http://www.dot.state.ak.us and accessing the "Traveler Quicklinks" and "Construction Advisories" submenus.

Permittee upon signing this permit acknowledges and agrees to the following conditions:

An area along the work zone must be wide enough to meet ADA access specifications.

Attachments included as part of this permit are:

REQUIRED for ALL permits:

[X] Traffic Control Plan(s).
[X] Proof of Insurance
[X] Proof of Training

REQUIRED if APPLICABLE:

[X] Letter of non-objection from each impacted construction project.
[X] Permit/authorization from affected municipalities.

I, JEFF TRUCANO, acknowledge that I am acting on behalf of the above named organization with the full authority to do so. I further acknowledge and accept that TRUCANO CONSTRUCTION shall comply with all the provisions and conditions that the Department of Transportation and Public Facilities has included as a condition of issuing this permit.

Jeff [signature] — 3-29-19
Permittee Signature — Date

[signature] — 3/29/2019
DOT&PF Signature — Date

The American Traffic Safety Services Association

Hereby recognizes that

Jeff Trucano

has attended

Traffic Control Supervisor

Training Course

02/11/2015
Date

Juneau, AK
Location

Donna M. Clarke
Training & Products Dept. Director

Ryan A. Wantz
President, CEO

ATSSA
SAFER ROADS SAVE LIVES

The American Traffic Safety Services Association

Hereby recognizes that

Jeff Trucano

has attended

Traffic Control Technician

Training Course

02/09/2015
Date

Juneau, AK
Location

Donna M. Clarke
Training & Products Dept. Director

Ryan A. Wantz
President, CEO

ATSSA
SAFER ROADS SAVE LIVES

PERMITS@JUNEAU.ORG

City & Borough of Juneau
Alaska's Capital City

Grading Permit Checklist

JUNEAU PERMIT CENTER, 4TH FLOOR MARINE VIEW CENTER, (907) 586-0770

All grading must conform with CBJ Title 19.12, Excavation and Grading.

Section I: **Case Number:** BLD20190145

Applicant's Name TRUCANO CONSTRUCTION
Mailing Address 3560 NORTH DOUGLAS HWY JUNEAU, AK 99801
Phone Number (907) 586-2444
Project Address 356 S. FRANKLIN STREET
Project Parcel Number 1C070K830036

Section II:

GRADING PLAN REQUIREMENTS

Grading permit applications must be accompanied by a drawing which graphically shows the grading site and the proposed grading changes. The plan shall show the following features:

- ☐ A. Name, address and phone number of applicant
- ☐ B. Lot number, legal description, and street address of grading site
- ☐ C. Lot boundary lines
- ☐ D. Buildings (existing and proposed)
- ☐ E. All easements affecting lot
- ☐ F. Location of driveway, including width and size of culvert
- ☐ G. Streams, ditches, swales and all other drainage features including locations where drainage leaves the grading site. (PLAN SHALL SHOW ALL DRAINAGE FLOWING INTO AN APPROVED DRAINAGE WAY)
- ☐ H. Location of underground utilities (water, sewer, phone, power, tv)
- ☐ I. Limits of all proposed cuts and fills
- ☐ J. Elevations and dimensions of proposed grading and buildings
- ☐ K. All structures within 15 feet of the boundaries of the site
- ☐ L. Survey of existing terrain shown with, elevations, cross sections or contours

The Building Official may require a more detailed plan and/or survey by licensed professionals for grading on sites with steep slopes, large excavations or fills (greater than 5,000 cubic yards), or for structural fills.

RECEIVED
APR 04 2019
PERMIT CENTER/CDD

Section III:

Will there be excavation activity? ☒ YES ☐ NO

How many cubic yards? 2,000 Cubic Yards

What type of material will be excavated? CONCRETE

Will excavated material be removed from the site? ☒ YES ☐ NO

How many cubic yards of material will be removed? 2,000 Cubic Yards

What is the location of the disposal site? 2571 CHANNEL DRIVE

Has a permit been obtained for the disposal site? ☒ YES ☐ NO

Will fill be brought on to site? ☒ YES ☐ NO

How many cubic yards? 2000 Cubic Yards

What type of material? 4" MINUS SHOT ROCK

From where will the material be obtained? AJC / JUGS CRUSHING

Will stumps need to be removed? ☐ YES ☒ NO

Describe method of disposal: _____

Will erosion protection be required? ☒ YES ☐ NO

Describe method: SEE ATTACHED EROSION CONTROL PLAN

Will a retaining wall be required to hold the cut or fill? ☐ YES ☒ NO

(Note: Walls four feet or greater in height must be designed by a professional engineer licensed in the State of Alaska.)

NOTE: DURING ~~UTILITY~~ UTILITY LOCATES, ACS TOLD ME THERE IS A FIBER OPTIC LINE RUNNING TO THE DOWNTOWN LIBRARY. THIS IS A CBJ OWNED LINE THEY ARE UNWILLING TO LOCATE. IS THERE AN ASBUILT THAT SHOWS IT'S LOCATION AVAILABLE?

Section IIII:

Has a grading plan been stapled to this checklist? (Note: See Grading Plan Requirements on the back of this page.)	YES	NO
If a driveway is to be constructed to a State of Alaska Department of Transportation right-of-way, attach a copy of the ADOT driveway permit. (Note: Glacier Highway, Mendenhall Loop Road, and other major arterial roads in the CBJ are ADOT rights-of-way.) Are ADOT permits required and attached to this checklist?	YES	NO
If grading project will require a well or on-site sanitary sewer disposal, permits from the State of Alaska Department of Environmental Conservation are required. Are ADEC permits required and attached to this checklist?	YES	NO
) CBJ Land Use Code may require a Conditional Use Permit be issued by the Planning Commission for Sand and Gravel Extraction. Please respond to the following questions in order to determine if the extraction is exempt from a planning permit.		
Is the extraction a necessary incident to work authorized under a valid building permit for a proposed permitted use?	YES	NO
Has a building permit been issued for the proposed permitted use?	YES	NO
Is the extraction a necessary incident to improvements which are part of an approved subdivision plat?	YES	NO
If associated with subdivision improvement, will the material excavated remain entirely on the property or original tract or parcel subdivided?	YES	NO
Is the extraction less than two feet in depth and not creating a slope greater than five feet in height or steeper than one and one-half horizontal to one vertical?	YES	NO
Does the extraction involve the removal of less than two hundred cubic yards from the lot?	YES	NO
Is the extraction a necessary incident to the location or placement of work located primarily in the public way which is exempt from the building code?	YES	NO
Is the extraction for cemetery graves, excavations for wells or tunnels, utilities or exploratory excavation totaling less than two hundred cubic yards?	YES	NO

A NO answer to one or more of the questions A through H above may indicate that a Conditional Use Permit is required.

⇒ **See Example Grading Plan. Required features are shown on example plan by encircled letters which correspond to the above list.**

1. All grading must conform with CBJ Title 19.12, Excavation and Grading. (Note: Grading activity shall comply with grading setbacks.)
2. Prior to placing fill, all organic material and overburden must be removed.
3. Stumps shall be disposed of in an approved manner.
4. If fill or excavation has the potential to endanger adjoining property, the Building Official may require a soils engineering report.
5. If drainage is modified, the site plan must show no additional drainage impact on adjoining properties.
6. All retaining walls shall be shown on the grading plan, and with a detail which shows the wall's construction. Walls four feet in height or grater must be designed by a professional engineer licensed in the State of Alaska.
7. Some projects on steep slopes will require a HILLSIDE DEVELOPMENT PERMIT as defined in section 49.70 of the municipal code. For information, contact the CBJ Community Development Department at 586-0770.
8. Fills placed on existing slopes between 5:1 and 2:1 shall be benched to minimize slippage.
9. Fills placed on slopes steeper than 2:1 must be placed in accordance with an approved soil engineer's or geologists plan or report.
10. Fills to be used to support structures must be placed in accordance with an approved plan and soils report prepared and submitted by a civil or soils engineer licensed in the State of Alaska.

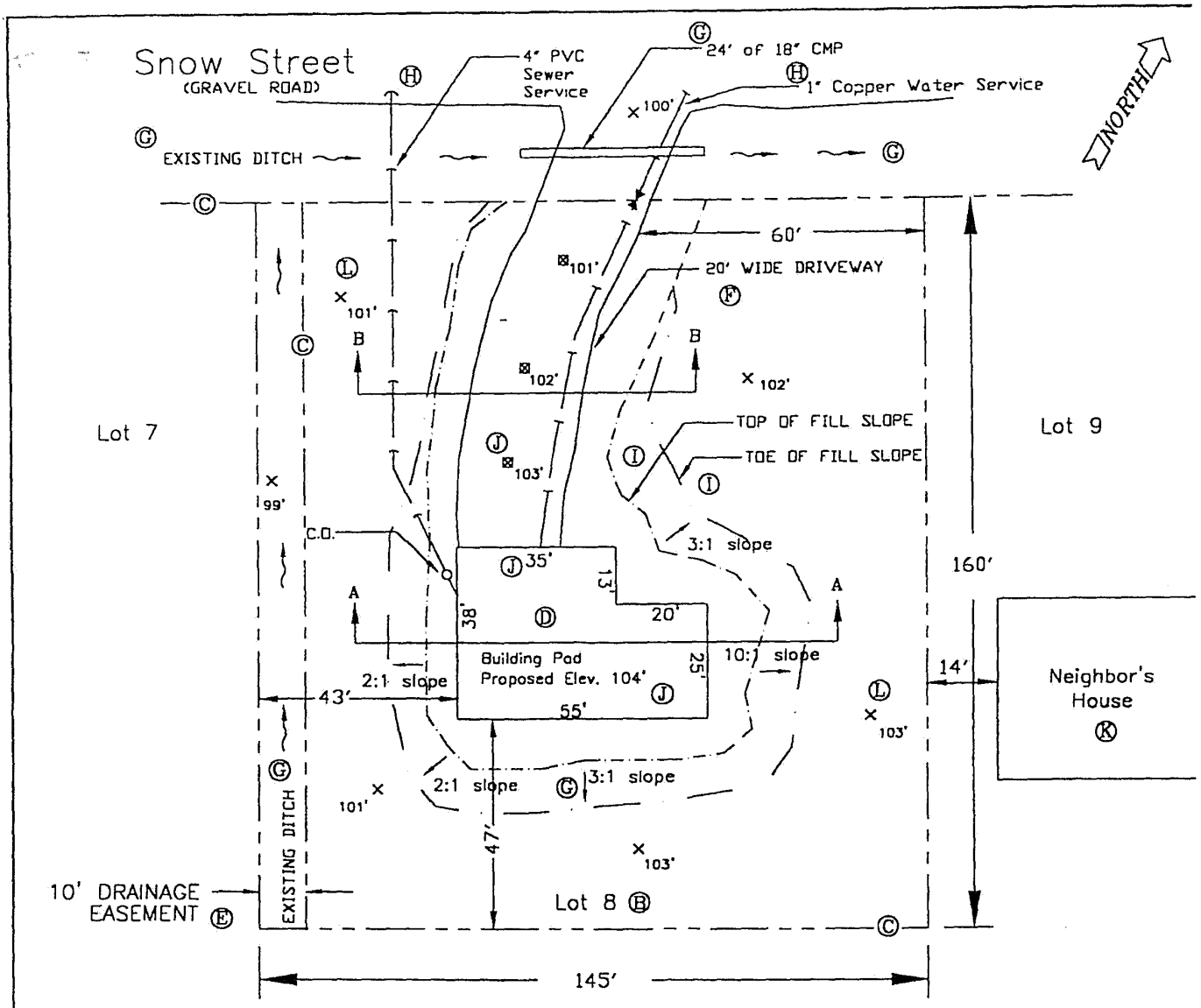

Example Grading Plan

Page 1 of 2

(Applicant shall attach own plan to grading permit application)

Key

$\times_{103'}$	Existing Elevation	Ⓛ
$\boxtimes_{103'}$	Proposed Elevation	Ⓙ
– – – –	Legal Boundary	Ⓒ
–·–·–	Top of Fill Slope	Ⓘ
— —	Toe of Fill Slope	Ⓘ
~→	Direction of Flow	Ⓖ
——→	Sewer Line	Ⓗ
——⊣	Water Line	Ⓗ

Notes:

1. Phone, Power, and TV lines are aerial. Ⓗ
2. Basis of elvevations is the center of the driveway at the intersection of the road. Ⓙ

Ⓐ Permit Applicant's Contact Information:

Jane Propertyowner
526 Fifteenth Street
Douglas, AK 99824
364–9999

Ⓑ Grading Site

Lot 8, Block B
Sleepy Subdivision
Snow Street
(No mail address assigned yet)

Form Date: January 22, 1996

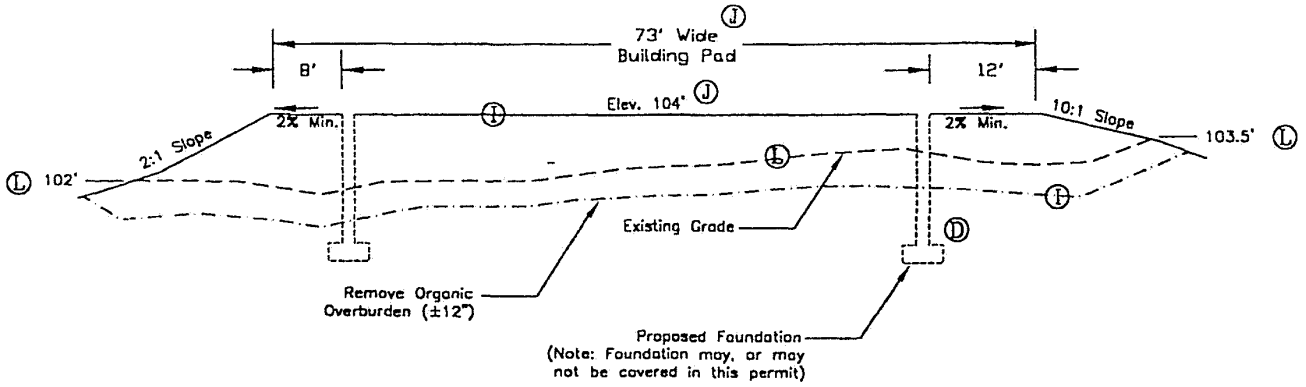

Section A–A

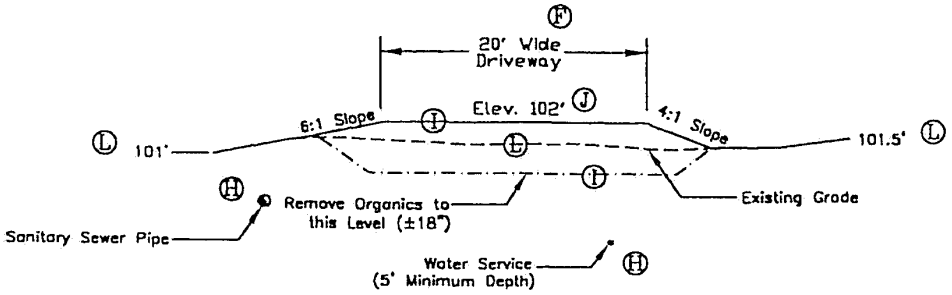

Section B–B

Example Grading Plan

Page 2 of 2

(Applicant shall attach own plan to grading permit application)

Ⓐ

Permit Applicant's
Contact Information:

Jane Propertyowner
526 Fifteenth Street
Douglas, AK 99824
364–9999

Ⓑ

Grading Site

Lot 8, Block B
Sleepy Subdivision
Snow Street
(No mail address assigned yet)

Form Date: January 22, 1996

File Copy -

ARCHIPELAGO PROPERTIES, LLC.
FOUNDATIONS DEMOLITION



VICINITY

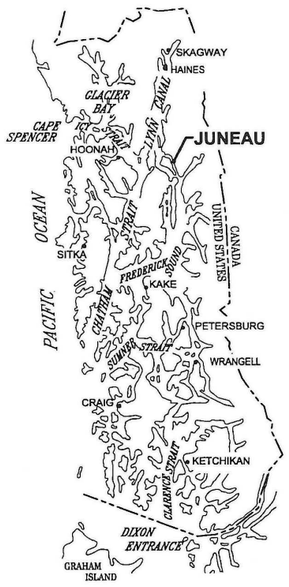

SOUTHEAST ALASKA

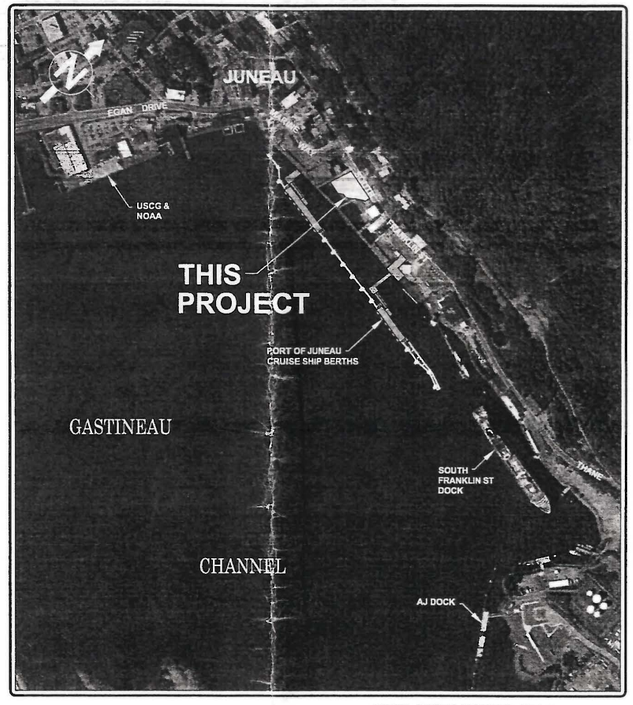

AERIAL PHOTO MODIFIED FROM:
CITY AND BOROUGH OF JUNEAU, 2006

VICINITY MAP

SCALE IN FEET
0 500 1000 FT.

TIDAL DATA

SOURCE: NOAA NOS/CO-OPS STATION ID: 9452210
JUNEAU, ALASKA 2/6/18

DESCRIPTION	ELEV. (FT.)
HIGHEST OBSERVED WATER LEVEL	+24.58
MEAN HIGHER HIGH WATER (MHHW)	+16.30
MEAN HIGH WATER (MHW)	+15.34
MEAN SEA LEVEL (MSL)	+8.58
MEAN TIDE LEVEL (MTL)	+8.47
MEAN LOW WATER (MLW)	+1.60
MEAN LOWER LOW WATER (MLLW)	0.00
LOWEST OBSERVED WATER LEVEL	-6.12

DRAWING INDEX

DWG. NO.	TITLE
	GENERAL
1	TITLE SHEET AND VICINITY MAPS
2	DEMOLITION SITE PLAN
3	TYPICAL DEMOLITION SECTION

PND ENGINEERS, INC. (PND) IS NOT RESPONSIBLE FOR SAFETY PROGRAMS, METHODS OR PROCEDURES OF OPERATION, OR THE CONSTRUCTION OF THE DESIGN SHOWN ON THESE DRAWINGS. DRAWINGS ARE FOR THE USE OF THIS PROJECT ONLY AND ARE NOT INTENDED FOR REUSE WITHOUT WRITTEN APPROVAL FROM PND. DRAWINGS ARE ALSO NOT TO BE USED IN ANY MANNER THAT WOULD CONSTITUTE A DETRIMENT DIRECTLY OR INDIRECTLY TO PND.

RECEIVED
APR 04 2019
PERMIT CENTER
BLD19-0145

PRELIMINARY

REVISIONS

REV.	DATE	DESCRIPTION	DWN.	CKD.	APP.

PND ENGINEERS, INC.
9360 Glacier Highway Ste 100
Juneau, Alaska 99801
Phone: 907-586-2093
Fax: 907-586-2099
www.pndengineers.com

DESIGN: CRS CHECKED: CRS
DRAWN: PJD APPROVED: CRS
SCALE: AS SHOWN
DATE: FEB. 2019

ARCHIPELAGO PROPERTIES LLC
FOUNDATIONS DEMOLITION

SHEET TITLE:
TITLE SHEET AND VICINITY MAP

PND PROJECT NO.: 182051.02 C.A.N. NO.: AECC250

1

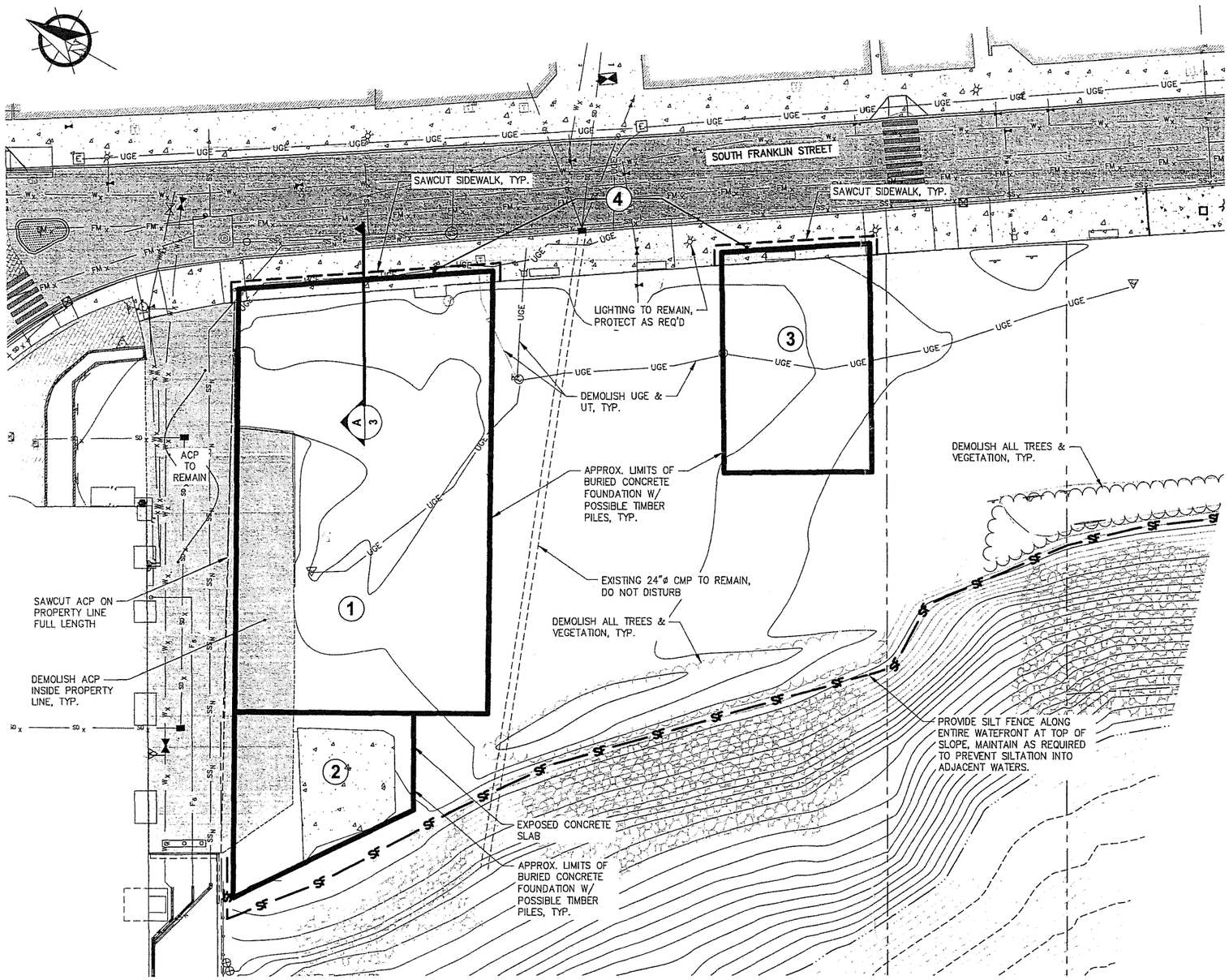

GENERAL NOTES

A	LIMITED INFORMATION IS AVAILABLE FOR BURIED FOUNDATION ELEMENTS. REVIEW ASBUILTS AND PRIOR DEMOLITION PLANS.
B	PROVIDE EROSION & SEDIMENT CONTROL FEATURES AS REQ'D TO SATISFY AKDEC REQUIREMENTS.
C	PROVIDE SAFETY BARRIERS AND FENCING AROUND ALL WORK TO PREVENT PUBLIC ACCESS.
D	PROVIDE TRAFFIC CONTROL PLAN MEETING AKDOT&PF AND CBJ APPROVAL.
E	CONTRACTOR SHALL OBTAIN UTILITY LOCATES PRIOR TO ANY GROUND DISTURBANCE. COORDINATE WITH AEL&P, PHONE, AND CABLE COMPANIES TO DISCONNECT SERVICES. DEMOLISH ALL UTILITIES WITHIN FOUNDATION LIMITS.
F	ALL DEMOLISHED MATERIALS SHALL BECOME PROPERTY OF THE CONTRACTOR AND SHALL BE REMOVED FROM THE SITE AND PROPERLY DISPOSED.
G	CONTRACTOR SHALL REMOVE ALL PILES IN THEIR ENTIRETY WITHIN DEMO LIMITS.

DEMOLITION SUMMARY

1	SALVAGE FILL ABOVE SLAB AND REUSE FOR BACKFILL OF VOID UPON COMPLETION OF FOUNDATION DEMOLITION. BUTTRESS NORTH AND EAST WALL WITH BACKFILL PRIOR TO DEMOLISHING ADJACENT CONCRETE TO PREVENT INSTABILITY AND ROTATION OF WALL.-DEMOLISH CONCRETE FOUNDATION INCLUDING SLABS, WALLS, COLUMNS, GIRDERS, FLOOR JOIST AND SPREAD FOOTINGS. STEM WALLS ON NORTH SIDES (ALLEY WAY) AND EAST (SO. FRANKLIN ST.) SIDES SHALL REMAIN EXCEPT FOR TOP 12" OF WALL. SAWCUT EXISTING ACP ON PROPERTY LINE AT NORTH SIDE OF FOUNDATION (ALLEY WAY). SAWCUT EXISTING CONCRETE SIDEWALK ON EAST SIDE OF FOUNDATION (S. FRANKLIN ST.). SAWCUT TOP OF NORTH AND EAST STEM WALLS TO REMOVE MINIMUM OF 12" BELOW SURFACE FINISHES. REMOVE ALL TIMBER PILES AND DEBRIS BELOW CONCRETE FOUNDATION PRIOR TO BACKFILLING. BACKFILL VOIDS FOLLOWNG DEMOLITION WITH USEABLE EXCAVATION AND CLASS A SHOT ROCK BARROW, PLACED IN 12" MAX. LIFTS. COMPACT ALL BACKFILL LIFTS W/ 6 UNIFORM PASSES OF 15 TON VIBRATORY STEEL DRUM COMPACTOR. PROVIDE UNIFORM FINISH GRADE MATCHING ADJACENT SITE ELEVATIONS AND GRADED TO DRAIN AWAY FROM SOUTH FRANKLIN STREET.
2	SIMILAR TO ITEM (1) HOWEVER LARGE VOID BELOW SLAB DOES NOT EXIST. ONLY NORTH WALL ALONG ALLEY WAY TO REMAIN.
3	SIMILAR TO ITEM (1) HOWEVER LARGE VOID BELOW SLAB DOES NOT EXIST. STEM WALLS AND SPREAD FOOTINGS AT THIS LOCATION ARE ESTIMATED TO EXTEND 12'–15' BELOW SLAB GRADE. DEEP EXCAVATIONS ARE ANTICIPATED FOR THIS DEMOLITION. ONLY EAST WALL ALONG SOUTH FRANKLIN ST. TO REMAIN
4	SAWCUT EXISTING 4"–6" THICK SIDEWALK AND REPLACE TO EXISTING LIMITS UPON COMPLETION OF DEMOLITION.

DEMOLISH = REMOVE & DISPOSE AT CONTRACTOR PROVIDED DISPOSAL SITE.

DIAL BEFORE YOU DIG!
586-1333
UNDERGROUND POWER, TELEPHONE, T.V., COMMUNICATIONS, WATER AND SEWER LINES ARE IN THE AREA. UTILITIES SHOWN HERE DO NOT SUBSTITUTE FOR FIELD LOCATES.

PRELIMINARY

RECEIVED
APR 04 2019
PERMIT CENTER/CDD

REVISIONS

REV.	DATE	DESCRIPTION	DWN.	CKD.	APP.

P N D ENGINEERS, INC.
9360 Glacier Highway Ste 100
Juneau, Alaska 99801
Phone: 907-586-2093
Fax: 907-586-2099
www.pndengineers.com

DESIGN: CRS CHECKED: CRS
DRAWN: PJD APPROVED: CRS
SCALE: SCALE IN FEET 0 15 30 FT.
DATE: FEB. 2019

ARCHIPELAGO PROPERTIES LLC
FOUNDATIONS DEMOLITION

SHEET TITLE: **DEMOLITION SITE PLAN**

PND PROJECT NO.: 182051.02 C.A.N. NO.: AEGG259.DWG

2

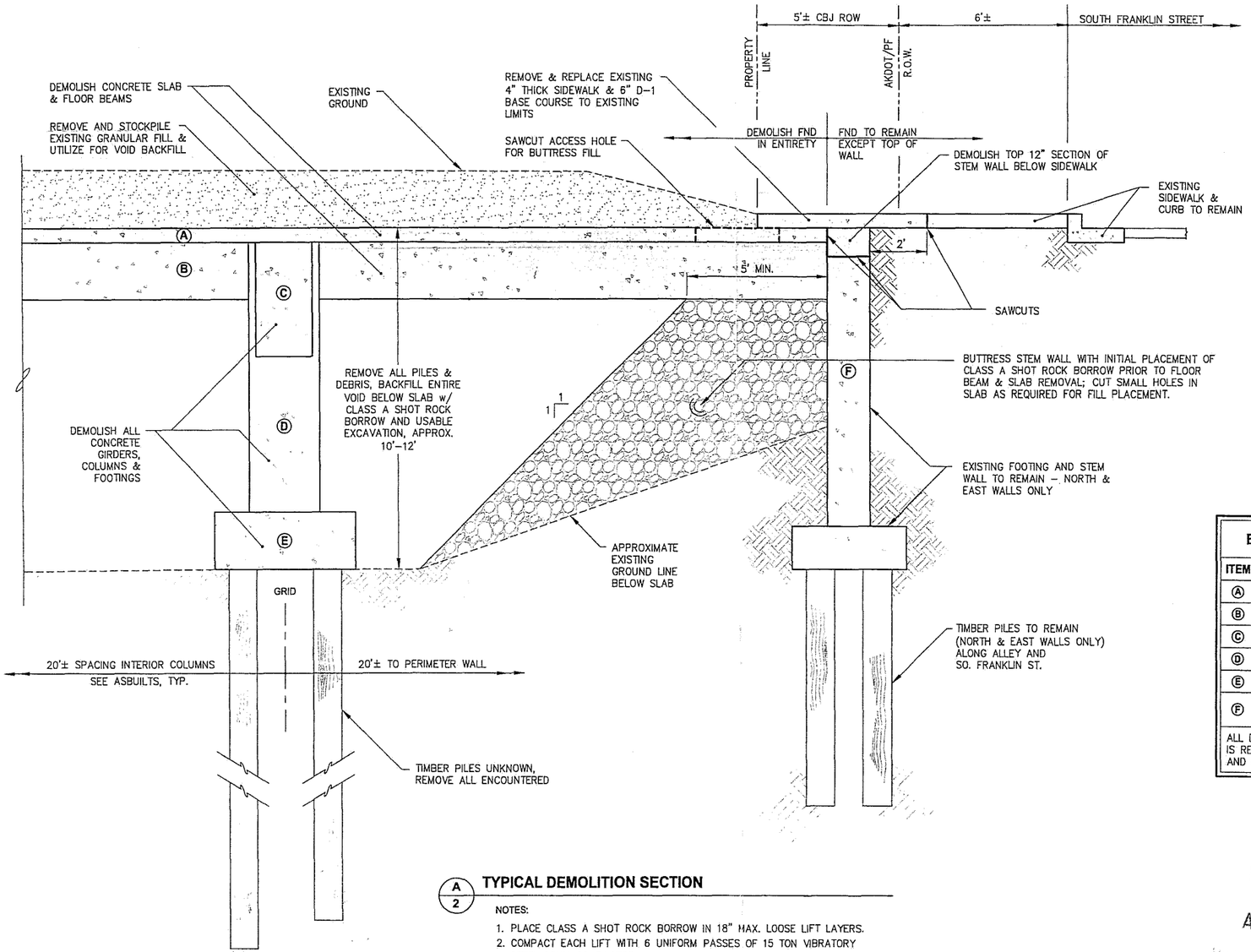

EXISTING FOUNDATION ELEMENTS	
ITEM	DESCRIPTION
Ⓐ	6"-8" SLAB
Ⓑ	12" x 24" FLOOR BEAM
Ⓒ	24" x 48" GIRDER
Ⓓ	30" x 30" COLUMN
Ⓔ	5' x 5' x 24" FOOTING
Ⓕ	18" THICK PERIMETER STEM WALL w/ FOOTING TO UNKNOWN DEPTH
ALL DIMENSIONS ARE APPROXIMATE; ALL CONCRETE IS REINFORCED; PILES ARE UNKNOWN. SEE ASBUILTS AND PHOTOGRAPHS.	

A/2 TYPICAL DEMOLITION SECTION

NOTES:

1. PLACE CLASS A SHOT ROCK BORROW IN 18" MAX. LOOSE LIFT LAYERS.
2. COMPACT EACH LIFT WITH 6 UNIFORM PASSES OF 15 TON VIBRATORY STEEL DRUM COMPACTOR.

RECEIVED
APR 04 2019
CENTER

PRELIMINARY

REVISIONS

REV.	DATE	DESCRIPTION	DWN.	CKD.	APP.

P N D ENGINEERS, INC.
9360 Glacier Highway Ste 100
Juneau, Alaska 99801
Phone: 907-586-2093
Fax: 907-586-2099
www.pndengineers.com

DESIGN: CRS CHECKED: CRS
DRAWN: PJD APPROVED: CRS
SCALE: AS SHOWN
DATE: FEB. 2019

ARCHIPELAGO PROPERTIES LLC
FOUNDATIONS DEMOLITION

SHEET TITLE: **TYPICAL DEMOLITION SECTION**

3

PND PROJECT NO.: 182051.02 C.A.N. NO.: AECC259.DWG

City & Borough of Juneau
Alaska's Capital City

BUILDING PERMIT

Permit No.
BLD20190321

* NOTE: "Building Permit" is a generic term which includes Building Safety Inspection, Grading Permits, and permits for Electrical, Plumbing and Mechanical work.

Your special attention is called to the following:

This permit is granted on the express conditions that the construction shall, in all respects, conform to the ordinances of the City and Borough of Juneau. It may be revoked at any time upon violation of any of said ordinances.

The granting of this permit does not authorize the violation of any federal, state or local law regulating construction for the violation of the terms of any deed or covenent or any zoning or other regulation.

If plan review was required, this permit must be attached to the approved drawings. The permit, plans and record of inspections must be available on site at all times while the construction is in progress and before final inspection.

The yellow posting notice must be prominently displayed to show a permit has been issued and to assist the inspectors in location of the project. This permit becomes null and void if work or construction authorized is not commenced within one year or if work or construction is suspended or abandoned for a period of one year at any time after work has commenced.

Note: City Ordinances REQUIRE a Final Inspection be approved for every Building Permit.

Inspections

Inspections can be arranged by telephoning **586-1703** or by written or faxed notification.
The Online Building Inspection Request Form is at: **www.juneau.org/permits/inspect_request.php.**
Work shall not proceed until the inspector has approved the various stages of construction. An approved Final Inspection is required.
Call before 7:00 AM for same day inspections.
Please provide the following information: 1 Permit Number, 2 Address, 3 Type of Inspection, 4 Date and Time and 5 Contact Name and Phone Number.

Job Address: **356 S FRANKLIN ST**
Permit Number: **BLD20190321**
Project Description: Downtown Waterfront Improvements phase I

Issued Date : **07/12/2019**
Parcel No: **1C070K830022**

Parcel Information : ARCHIPELAGO LT 1A

Setbacks: Zone: :
Front: 10.00 Ft. Side 1: 10.00 Ft.
Rear: 10.00 Ft. Side 2: 10.00 Ft.
Street Side: 10.00 Ft.
Comments:

Owner : ARCHIPELAGO PROPERTIES LLC
ATTN TAX DEPT
725 BROAD ST
AUGUSTA GA 30901

Applicant : CITY AND BOROUGH OF JUNEAU DOCKS A
155 S SEWARD ST
JUNEAU AK 99801

Fee Type	Date	Receipt	Amount Paid
		Total Fees Paid:	

Valuation for Permit Fee Calculations:

S.F.	Type	Rate	Amount
			1,400,000.00
		Total Valuation:	$1,400,000.00

Project Conditions and Holds:
Special Inspection - Special inspection by PND Enginering for Concrte and Reinforcing Steel, Bolts installed in Concrete, Welding, High-Strength Bolting,Pile Driving and Soil Compation. Provide weekly inspection reports and a final letter of approval before C of O.

Inspections Required: Call for inspection before covering or concealing any of the work described below. Inspections may be combined.

JUNEAU PERMIT CENTER - 230 S. Franklin Street - 4th Floor, Marine View Center - Mail: 155 S. Seward Street, Juneau, AK 99801
Phone: 586-0770 - FAX: 586-3365 - Inspection Requests: 586-1703 - Email: permits@ci.juneau.ak.us
Web Site: www.juneau.org/permits

Staff Review Sheet

Planner

Permit Intake Initials: _____

FIRE ZONE ENG WAT SEW ARCH STRUC PLUM MECH ELEC ACCESS SPEC/INSP

6/3/2019

Case No: **BLD20190321**

Site Address: 356 S FRANKLIN ST

Parcel No: 1C070K830036

Desc: Downtown Waterfront Improvements phase I

Commercial ADD

FCC Code: 329

Type of Construction: ____

New Dwelling Units: 0

Existing Dwelling Units: 0

Occupancy Class: _____

Sprinkler Substitute for Type A Construction: YES NO

Sprinkler System: FULL PARTIAL NONE Required: YES NO

Alarm System: FULL PARTIAL NONE Required: YES NO

Code Edition: IBC2012 Code Review by: _____ Date: _____

Valuation for Permit Fee Calculations:

S.F.	Type	Rate	Amount

Total Valuation:

LAND USE

ZONE/UNITS WC /

WETLAND

FLOOD ELEV 25.00

FIRM ZONE VE

FIRM MAP

LOT SIZE 43,508 SF 1.0 ACRES

SETBACKS

Front 10

Rear 10

Side 10

Other

PARKING

ANADROMOUS

EAGLES NEST

Coverage _____ Permissible/Conditional

HEIGHT _____ Permissible/Accessory

VEGETATION

HAZARD

ENGINEERING/PUB WORKS

Dwelling Units:

CITY WATER:

Permit #: UTL 19-68.

Use:

Assessment: 9000.00

Service Size: 6"

Line Size:

Meter Size:

CITY SEWER:

Permit #: UTL-19-69.

Use: COMMERCIAL

Assessment: $ 2000.00

Fixture Units: 46

LAND USE PERMITS

ADR Case #:

PLAN REVIEW APPROVALS

	Initials	Date
__ Fire	[illegible]	7/10/19
__ Zoning	[illegible]	7/9/19
X Engineering	MRM	7/1/19
X Water	MRM	7/1/19
X Sewer	MRM	7/1/19
__ Architectural	[illegible]	6/12/19
__ Structural	[illegible]	6/12/19
__ Plumbing		
__ Mechanical		
__ Electrical	[illegible]	6/6/19
__ Access		
__ Spcl Insp Form	[illegible]	7/10/19

APPROVED FOR ISSUANCE

[signature]

Signature

7/10/19

Date

PERMIT ISSUANCE FEES

__ Grading Plan Review Fee	$
__ Adjusted Plan Review Fee	$
__ Fast Track Fee	$
__ Early Start Fee	$
__ Building Permit Fee	$
__ Water Assessment Fee	$ 9000.00
__ Sewer Assessment Fee	$ 2000.00
__ Sewer Inspection Fee	$
__ Grading Permit Fee	$
__ Driveway Permit Fee	$
__ Bond for	$
__ Other	$
Total Issuance Fees	$

PERMIT ISSUANCE PAYMENTS

Date	Receipt	Check	Amount
			$
			$
			$

Parcel Tags:

5/2/16 TJF - VAR2011-0004 allows 0ft setback on NW property line for food carts.

CONDITIONS AND HOLDS ON PERMIT: (Continued on back of sheet)

BUILDING PERMIT APPLICATION (Continued)

TYPES OF INSPECTIONS

The Work Codes below contain standard inspections for the permit type. Circle additional inspections if required.

Work Codes -
B-Building Safety Inspection
B-Commercial Addition
B-Demolition
B-Grading
B-Manufactured Home Placement
B-Oil/Gas Piping
B-Porches/Decks/Carports
B-Reroof
B-Residential Electrical Service
B-Single Family Dwelling
E-ROW- Water & Sewer Service
E-ROW- Water Main
E-ROW-Driveway
E-ROW-Fire Line
E-ROW-Sewer Main
E-ROW-Sewer Main & Service
E-ROW-Sewer Service
E-ROW-Water Main & Service
E-ROW-Water Main & Sewer Main
E-ROW-Water Service
E-UTL- Sewer Main
E-UTL-Fire Line
E-UTL-Fire Line & Water Line
E-UTL-Fire Line & Water Main
E-UTL-OWTDS
E-UTL-Sewer Line
E-UTL-Pressure Sewer Line
E-UTL-Sewer Line w/ Decomm
E-UTL-Pressure Sewer Line w/Decom
E-UTL-Water Line
E-UTL-Water Main

Building-
B-Appliance/Chimney
B-Bonding
B-Building Final
B-Building Service
B-Combustion Air
B-Commercial Hoods
B-Conduit & Raceway Systems
B-Cross Connection Control
B-Demo Electric Safed Off
B-Demo Excavation Filled
B-Demo Sewer/Water Capped
B-Demolition Final
B-Devices and Equipment
B-Electrical Final
B-Fire Dampers/Sprinklers
B-Fire Separation/Rated Assemb
B-Foundation, Forms & Reinf Steel
B-Framing
B-Grounding
B-Heat Piping
B-Insulation/Vapor Barrier
B-Masonry
B-Mechanical Final
B-Meter Yoke
B-Meter Yoke with Meter
B-MH Foundation
B-MH Utilities
B-Mobile Home Final
B-Plumbing Final
B-Oil & Gas Piping/Tanks
B-Rough Electrical
B-Rough Plumbing
B-Service/Panel
B-Setback Verification
B-Smoke/Carbon Monoxide Detec
B-Special Inspection
B-Specialty Piping
B-Temporary Power
B-Under Slab Utilities
B-Ventilation/Plenums & Ducts
B-Vents (Bath, Dryer, Kitchen, etc.)
B-Yellow Tag Electrical
B-Zoning Final

Enforcement -
ENF - Enforcement Status Check

Miscellaneous -
M-Site Visit

Fire -
F-Address and Required Signage
F-Alarm Panel/Transmitter
F-Alarm Zones
F-Blasting on Individual Lot
F-Childcare/Daycare Inspection
F-Commercial Dev Land Clearing
F-Courtesy Inspection
F-Emergency Lighting Test
F-Events in Mall Hallways
F-Explosives Shipment-Unest Loc
F-FDC Location
F-Fire Extinguishers
F-Fire Final
F-Fire Hydrant Placement
F-Fire Related Inspection
F-Fixed Welding Inspection
F-Flammable/Combustible Material
F-Hazardous Material Storage
F-Kitchen Hood Suppression Test
F-Liquor License Renewal
F-Open Burning Inspection
F-Paint Booth Inspection
F-Proper Sprinkler System Bracing
F-Roof/Tar Kettle Inspection
F-Special Event Structure
F-Sprinkler Head Placement
F-Sprinkler Hydrostatic Test
F-Subdivision Land Clearing
F-Subdivision/Road Blasting
F-System Acceptance Test
F-Temporary Welding Inspection
F-Underground Fire Line Flush

Engineering -
E-Access to Curb Stop Valve
E-ADEC on-site Sewer Final
E-ADEC on-site Water Main Final
E-Asbuilt Survey Required
E-Bacteriological Test
E-Bedding / Backfill
E-Billing Authorization
E-Blasting Verification
E-Bore Flush
E-CBJ Waste Water Department
E-CBJ Water Department
E-Chlorination Test
E-Cleanouts
E-Continuity
E-Cross Connection Control
E-Culvert
E-Curb Box
E-Curb Cut Final
E-Curb Cut Reinforcement
E-Curb Stop
E-Depth
E-Electrical Utility
E-Final
E-Fire Hydrants
E-Fire Line Final
E-General Engineering Final
E-Grade
E-Grading/Drainage
E-Headwalls
E-Installation of Access & Ports
E-Installation of Insulation
E-Location
E-Manhole Tap
E-Manholes - Sewer Main
E-Material
E-OWTDS Inspection
E-Pressure Test
E-Pump Ticket
E-Residual / Free Chlorine
E-Retaining Walls
E-ROW - Final
E-ROW Restoration
E-Septic Decommission
E-Sewer Connection
E-Sewer Disconnect
E-Sewer Final
E-Sewer Main Final
E-Sewer Service Tap
E-Sewer System
E-Sidewalk Final
E-Sidewalk Reinforcement
E-Size
E-Soil
E-State D.O.T. Approval
E-Storm Drains
E-Street Patch
E-Streets
E-Telephone Utility
E-Thaw Waiver
E-Thaw Wire
E-Thrust Blocks
E-Turn Water OFF
E-Turn Water ON
E-TV Cable
E-Utility Ribbon
E-Utility Trench
E-Water Final
E-Water Meter Required
E-Water Meter/Yoke
E-Water Service Tap
E-Water System
E-Water Tap
E-Width

ADDITIONAL CONDITIONS AND HOLDS (STAFF)

City & Borough of Juneau
Alaska's Capital City

Application Date: **June 3, 2019**

BUILDING PERMIT APPLICATION

NOTE: THIS IS NOT A BUILDING PERMIT

* NOTE: "Building Permit" is a generic term which includes Building Safety Inspections, Grading Permits, and permits for Electrical, Plumbing and Mechanical work.

Case No: **BLD20190321**

Case Description: Downtown Waterfront Improvements phase I

Site Address: **356 S FRANKLIN ST**

Check No. of Existing Dwelling Units:

Parcel No: 1C070K830036
1C070K830037
1C070K830038
1C070K830039

No. of New Dwelling Units: 0

Legal Description: ARCHIPELAGO LT 1

No. of Removed Dwelling Units: 0

Applicant : CITY AND BOROUGH OF JUNEAU DOCKS AND HARBORS
155 S SEWARD ST
JUNEAU AK 99801

PH1 586-0398

Owner: ARCHIPELAGO PROPERTIES LLC
ATTN TAX DEPT
725 BROAD ST
AUGUSTA GA 30901

PH: _____ FAX _____

Contractor: TO BE BID

Valuation for Permit Fee Calculations:

S.F.	Type	Rate	Amount

Total Valuation:

Associated Cases:

None.

Parcel Tags:

5/2/16 TJF - VAR2011-0004 allows 0ft setback on NW property line for food carts.

Notes and Conditions:

Applicant's Signature
(Owner, Contractor or Authorized Agent)

Date

Staff Acceptance

I hereby certify that I have read and examined this application and know the same to be true and correct. I further certify that all provisions of laws and ordinances governing this type of work will be complied with whether specified herein or not. I understand that the granting of a permit does not presume to give authority to violate or cancel the provisions of any other federal, state or local law regulating construction or the performance of construction.

JUNEAU PERMIT CENTER - 230 S. Franklin Street - 4th Floor, Marine View Center - Mail: 155 S. Seward Street, Juneau, AK 99801
Phone: 586-0770 - FAX: 586-3365 - Inspection Requests: 586-1703 - Email: permits@ci.juneau.ak.us
Web Page: HTTP://WWW.JUNEAU.ORG/PERMITS

City & Borough of Juneau
Alaska's Capital City

UTILITY PERMIT

Permit No.
UTL20190068

* NOTE "Utility Permit" is a generic term which includes Water Connection Permits, Sewer Connection Permits, Water Inspections and Sewer Inspections.

Your special attention is called to the following:

This permit is granted on the express conditions that the construction shall, in all respects, conform to the ordinances of the City and Borough of Juneau. It may be revoked at any time upon violation of any of said ordinances.

The granting of this permit does not authorize the violation of any federal, state or local law regulating construction for the violation of the terms of any deed or covenent or any zoning or other regulation.

If plan review was required, this permit must be attached to the approved drawings. The permit, plans and record of inspections must be available on site at all times while the construction is in progress and before final inspection.

The yellow posting notice must be prominently displayed to show a permit has been issued and to assist the inspectors in location of the project. This permit becomes null and void if work or construction authorized is not commenced within one year or if work or construction is suspended or abandoned for a period of one year at any time after work has commenced.

Inspections can be arranged by telephoning **586-1703** or by written or faxed notification.
The Online Building Inspection Request Form is at: **www.juneau.ak.us/cdd/insp_req.htm**.
Work shall not proceed until the inspector has approved the various stages of construction.

Call before 7:00 AM for same day inspections.

Job Address: **356 S FRANKLIN ST**
Permit Number: **UTL20190068**
Project Description: 6" customer water line

Issued Date : **07/12/2019**
Parcel No: **1C070K830022**
UTO Date: **07/12/2020**

Parcel Informati ARCHIPELAGO LT 1A

Owner : ARCHIPELAGO PROPERTIES LLC
ATTN TAX DEPT
725 BROAD ST
AUGUSTA GA 30901

Applicant : CITY AND BOROUGH OF JUNEAU DOCK
155 S SEWARD ST
JUNEAU AK 99801

Fee Type	Date	Receipt	Amount Paid

Total Fees Paid:

Project Conditions and Holds:
None.

Inspections Required: Call for inspection before covering or concealing any of the work described below. Inspections may be combined.

E-Size	E-Depth	E-Curb Box
E-Curb Stop	E-Access to Curb Stop V:	E-Thaw Wire
E-Pressure Test	E-Water Meter/Yoke	E-Cross Connection Cont
E-Thaw Waiver	E-Billing Authorization	E-ROW Restoration
E-Water Final		

JUNEAU PERMIT CENTER - 230 S. Franklin Street - 4th Floor, Marine View Center - Mail: 155 S. Seward Street, Juneau, AK 99801
Phone: 586-0770 - FAX: 586-3365 - Inspection Requests: 586-1703 - Email: permits@mail.ci.juneau.ak.us

City & Borough of Juneau
Alaska's Capital City

UTILITY PERMIT

Permit No.
UTL20190069

* NOTE: "Utility Permit" is a generic term which includes Water Connection Permits, Sewer Connection Permits, Water Inspections and Sewer Inspections.

Your special attention is called to the following:

This permit is granted on the express conditions that the construction shall, in all respects, conform to the ordinances of the City and Borough of Juneau. It may be revoked at any time upon violation of any of said ordinances.

The granting of this permit does not authorize the violation of any federal, state or local law regulating construction for the violation of the terms of any deed or covenent or any zoning or other regulation.

If plan review was required, this permit must be attached to the approved drawings. The permit, plans and record of inspections must be available on site at all times while the construction is in progress and before final inspection.

The yellow posting notice must be prominently displayed to show a permit has been issued and to assist the inspectors in location of the project. This permit becomes null and void if work or construction authorized is not commenced within one year or if work or construction is suspended or abandoned for a period of one year at any time after work has commenced.

Inspections can be arranged by telephoning **586-1703** or by written or faxed notification.
The Online Building Inspection Request Form is at: **www.juneau.ak.us/cdd/insp_req.htm**.
Work shall not proceed until the inspector has approved the various stages of construction.

Call before 7:00 AM for same day inspections.

Job Address: **356 S FRANKLIN ST**
Permit Number: **UTL20190069**
Project Description: install of new sewer line.

Issued Date : **07/12/2019**
Parcel No: **1C070K830022**
UTO Date: **07/11/2020**

Parcel Informati ARCHIPELAGO LT 1A

Owner : ARCHIPELAGO PROPERTIES LLC
ATTN TAX DEPT
725 BROAD ST
AUGUSTA GA 30901

Applicant : CITY AND BOROUGH OF JUNEAU DOCK
155 S SEWARD ST
JUNEAU AK 99801

Fee Type	Date	Receipt	Amount Paid

Total Fees Paid:

Project Conditions and Holds:
None.

Inspections Required: Call for inspection before covering or concealing any of the work described below. Inspections may be combined.

E-Size	E-Depth	E-Material
E-Soil	E-Sewer Connection	E-Cleanouts
E-Billing Authorization	E-Grade	E-ROW Restoration
E-Sewer Final		

JUNEAU PERMIT CENTER - 230 S. Franklin Street - 4th Floor, Marine View Center - Mail: 155 S. Seward Street, Juneau, AK 99801
Phone: 586-0770 - FAX: 586-3365 - Inspection Requests: 586-1703 - Email: permits@mail.ci.juneau.ak.us

SPECIAL INSPECTION PROPOSAL FORM

No

Note: this form must be completed by the Owner or Architect/Engineer of Record and approved by the Building Official prior to issuance of a Building Permit. The qualified individual special inspector must be identified along with their firm. Special Inspector may not be employed by the Contractor or anyone responsible for the construction work.

PROJECT DWI DATE 7/8/19
OWNER CMT Docks & Harbors PERMIT APPLICATION NUMBER BLD2019032.1

PROPOSED SPECIAL INSPECTOR Firm: PND ENGINEERS INC. and Individual: Mark SAMS
(Please fill out one of these forms for each Special Inspector on this project. Attach proposed inspector's qualifications.)

PROPOSED TESTING AGENCIES PDC ENGINEERS FOR MATERIAL TESTING
(Specify which catagory they are testing.)

TYPES OF INSPECTIONS REQUIRED:

Check each type of inspection required by Architect/Engineer of Record as indicated on the approved building plans and specifications.

☑ 1. CONCRETE
Inspection Scope & Schedule* ALL STRUCTURAL CONCRETE INCLUDING SUSPENDED SLABS, RETAIN WALLS, AND FOUNDATIONS. VERIFY FORMWORK, SIZE, AND LOCATION.
Frequency of Sampling Materials SAMPLE ONCE PER 50CY OF PLACED CONCRETE OR ONCE PER DAY
Frequency of Testing Compressive Strength TESTING shall be (1) 7-DAY, (1) 14-DAY, AND (3) 28-DAY

☑ 2. BOLTS INSTALLED IN CONCRETE
Inspection Scope & Schedule* Verify ALL Highstrength BOLTS For Grade, Length, and LOCATION. Inspect visually prior to concrete placement.

☐ 3. SPECIAL MOMENT - RESISTING CONCRETE FRAME
Inspection Scope & Schedule* NA
Frequency of Sampling Materials
Frequency of Testing

☑ 4. REINFORCING STEEL AND PRESTRESSED STEEL TENDONS
Inspection Scope & Schedule* ALL Reinforcement shall be verified For Size, Grade, Location, Spacing and Cover
Method of Testing Visual

5. WELDING

☐ A. SPECIAL MOMENT - RESISTING STEEL FRAMES
Inspection Scope & Schedule* NA
Type of non-destructive testing
Frequency of Tests

☑ B. STRUCTURAL WELDING INCLUDING REINFORCING STEEL
Inspection Scope & Schedule* ALL Field WELDS shall be visually inspected For weld size, Length, Location, And Discontinuities.
Type of non-destructive testing Visual
Frequency of Tests Periodic For fillet welds 5/16" or less AND Continuous For All other welds.

☑ 6. HIGH-STRENGTH BOLTING
Inspection Scope & Schedule* Verify BOLT Pretension with Skidmore Wilhelm Device and Turn-of-THE-NUT Method. Check BOLTS For Grade, size and washers.
Method of Testing Visual Turn-of-NUT METHOD ON EACH BOLT.
Frequency of Testing Test (3) Bolts of each Diameter and length w/ Skidmore Device.

☐ 7. STRUCTURAL MASONRY
Inspection Scope & Schedule* NA
Frequency of Sampling Materials
Frequency of Testing

☐ 8. REINFORCED GYPSUM CONCRETE
Inspection Scope & Schedule* NA
Frequency of Sampling Materials
Frequency of Testing

☐ **9. INSULATING CONCRETE FILL**
Inspection Scope & Schedule* NA
Frequency of Sampling Materials
Frequency of Testing

☐ **10. SPRAYED-ON FIREPROOFING**
Inspection Scope & Schedule* NA
Method of Inspection
Frequency of Sampling Materials
Frequency of Testing

☑ **11. PILING, DRILLED PIERS AND CAISSONS**
Inspection Scope & Schedule* Verify pile capacity in compression & Tension Recording Blow counts and Hammer energy Inspect Each pile During Driving
Method of Inspection Visual

☐ **12. SHOTCRETE**
Inspection Scope & Schedule* NA
Method of Inspection
Frequency of Sampling Materials
Frequency of Testing

☑ **13. SPECIAL GRADING, EXCAVATION AND FILLING**
Inspection Scope & Schedule* Verify Extent of Excavation Fill material Compliance w/ Compaction, Compaction Effort and soil Density After Compaction w/ Proctor
Method of Testing Soil Density Level of Effort For Shot Rock, Nuclear Densometer For Base Course.

☐ **14A. SPECIAL CASES** TYPE: NA
Inspection Scope & Schedule*
Method of Inspection
Other

☐ **14B. SPECIAL CASES** TYPE: NA
Inspection Scope & Schedule*
Method of Inspection
Other

☐ **14C. SPECIAL CASES** TYPE: NA
Inspection Scope & Schedule*
Method of Inspection
Other

SPECIAL INSPECTOR CERTIFICATION:
I hereby certify that I am qualified to perform the special inspection items marked above, that I will perform the special inspections at the appropriate times scheduled by the contractor and that I will submit weekly and final reports.

Special Inspector: Mark Sams MS Date: 7/6/19

OWNER CERTIFICATION: (May be signed by Architect /Engineer of Record on Owner's behalf.)
I hereby certify that I will employ the aforementioned Special Inspector to perform the inspections shown above.

Owner: [signature] Date: 7/10/19

BUILDING OFFICIAL'S APPROVAL OF PROPOSAL OF SPECIAL INSPECTION:

Building Official: John Young For Charlie Ford Date: 7/10/19

Note:
Special Inspection weekly reports must be submitted to the owner and to the Building Official within 5 working days of the last day of the week being reported to avoid Suspension of the Building Permit and possible Stop Work Order.
A monthly summary letter is required for overall status including any outstanding items that require followup. The final special inspection approval letter(s) must be submitted before use or occupancy. Any variation to the special inspection proposal requires prior approval of the Building Official.

* (extent of work inspected; continuous or periodic, frequency)

(SPECINSP XLS Revised: 6/4/08)

CITY & BOROUGH OF JUNEAU - DOCKS & HARBORS

DOWNTOWN WATERFRONT IMPROVEMENTS PHASE I

CBJ CONTRACT NO. DH19-014



VICINITY

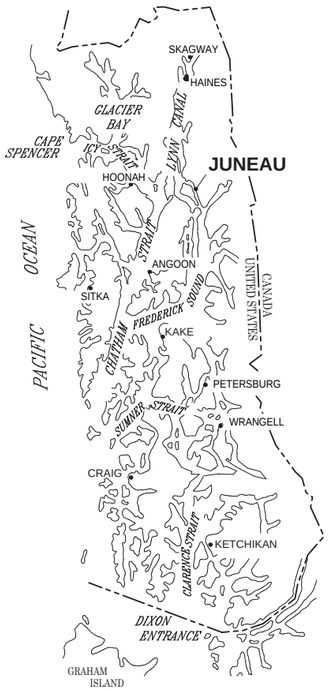

SOUTHEAST ALASKA



VICINITY MAP

SCALE IN FEET
0 400 800 FT.

TIDAL DATA

SOURCE: NOAA NOS/CO-OPS STATION ID: 9452210
JUNEAU, ALASKA 2/6/18

DESCRIPTION	ELEV. (FT.)
HIGHEST OBSERVED WATER LEVEL	+25.1
MEAN HIGHER HIGH WATER (MHHW)	+16.3
MEAN HIGH WATER (MHW)	+15.3
MEAN SEA LEVEL (MSL)	+8.6
MEAN TIDE LEVEL (MTL)	+8.5
MEAN LOW WATER (MLW)	+1.6
MEAN LOWER LOW WATER (MLLW)	0.0
LOWEST OBSERVED WATER LEVEL	-5.7

PND ENGINEERS, INC. (PND) IS NOT RESPONSIBLE FOR SAFETY PROGRAMS, METHODS OR PROCEDURES OF OPERATION, OR THE CONSTRUCTION OF THE DESIGN SHOWN ON THESE DRAWINGS. DRAWINGS ARE FOR THE USE OF THIS PROJECT ONLY AND ARE NOT INTENDED FOR REUSE WITHOUT WRITTEN APPROVAL FROM PND. DRAWINGS ARE ALSO NOT TO BE USED IN ANY MANNER THAT WOULD CONSTITUTE A DETRIMENT DIRECTLY OR INDIRECTLY TO PND.

P N D ENGINEERS, INC.
9360 Glacier Highway Ste 100
Juneau, Alaska 99801
Phone: 907-586-2093
Fax: 907-586-2099
www.pndengineers.com

DESIGN: CRS CHECKED: CRS
DRAWN: PJD APPROVED: CRS
SCALE: AS SHOWN
DATE: 5/23/2019

STATE OF ALASKA 49TH Charles R. Somerville CE-8845 REGISTERED PROFESSIONAL ENGINEER

DOWNTOWN WATERFRONT IMPROVEMENTS PHASE I
CBJ CONTRACT NO. DH19-014

SHEET TITLE: **TITLE SHEET AND VICINITY MAP**

PND PROJECT NO.: 182045 C.A.N. NO.: AECC250

G1.01

DRAWING INDEX

DWG NO.	TITLE
	GENERAL
G1.01	TITLE SHEET AND VICINITY MAP
G1.02	DRAWING INDEX
G1.03	GENERAL NOTES, LEGEND AND ABBREVIATIONS
G1.04	EXISTING CONDITIONS, SURVEY CONTROL AND BOREHOLE LOCATIONS
G1.05	DEMOLITION SITE PLAN
G1.06	DEMOLITION SECTIONS & PHOTOS
G1.07	DEMOLITION SECTIONS & PHOTOS
G1.08	DEMOLITION SECTIONS
G1.09	DEMOLITION DETAILS
G1.10	OVERALL SITE PLAN
G1.11	STAGING AREAS
	CIVIL
C1.01	PARTIAL SITE PLAN
C1.02	PARTIAL CONCRETE DECK GRADING PLANS
C1.03	POINT LAYOUT TABLES
C1.04	TYPICAL SITE SECTIONS
C1.05	TYPICAL SITE SECTIONS
C1.06	CIVIL DETAILS
C1.07	STORM DRAIN PLAN
C1.08	WATER & SEWER UTILITY PLAN
C1.09	STORM DRAIN DETAILS
C1.10	STORM DRAIN DETAILS
C1.11	WATER & SEWER DETAILS
C1.12	WATER & SEWER DETAILS
C1.13	STRIPING & SIGNAGE PLAN
C1.14	STRIPING, BUMPER CURB & DRIVEWAY CURB CUT
C1.15	APPROACH DOCK UTILITIES EXISTING CONDITION
C1.16	APPROACH DOCK UTILITIES REPLACEMENT PLAN
C1.17	APPROACH DOCK UTILITIES SUPPORT DETAILS

DRAWING INDEX (CONT.)

DWG NO.	TITLE
	STRUCTURAL
S1.01	STRUCTURAL GENERAL NOTES
S1.02	PILE SCHEDULES
S1.03	PILE TYPICAL DETAILS
S1.04	PILE TYPICAL DETAILS
S1.05	TYPICAL DOCK FRAMING DETAILS
S1.06	TYPICAL DOCK FRAMING DETAILS
S1.07	LIGHT POLE TYPICAL DETAILS
S1.08	LIGHT POLE TYPICAL DETAILS
S1.09	CONCRETE RETAINING WALL PLAN AND PROFILE
S1.10	CONCRETE RETAINING WALL SECTIONS
S1.11	CONCRETE RETAINING WALL SECTIONS AND DETAILS
S1.12	CONCRETE RETAINING WALL DETAILS
S1.13	CONCRETE RETAINING WALL PEDESTAL DETAILS
S1.14	CONCRETE RETAINING WALL DETAILS
S1.15	TRANSITION PLATE PARTIAL PLAN AND SECTION
S1.16	TRANSITION PLATE LAYOUT
	STRUCTURAL - CONCRETE DECK
S2.01	CONCRETE DECK PARTIAL PLAN
S2.02	CONCRETE DECK ELEVATION AND SECTION
S2.03	CONCRETE DECK FRAMING PLAN
S2.04	PILE CAP PLAN
S2.05	PILE CAP PLAN
S2.06	PILE CAP PLAN
S2.07	CONCRETE DECK SECTIONS
S2.08	CONCRETE DECK DETAILS
S2.09	CONCRETE DECK DETAILS
S2.10	CONCRETE DECK RAILING SECTIONS AND ELEVATIONS
S2.11	CONCRETE WALL SECTIONS AND MISCELLANEOUS RAILING DETAIL
S2.12	MISCELLANEOUS RAILING DETAIL
S2.13	SWING GATE PLAN, ELEVATION, AND SECTION
S2.14	PARKING CANOPY PLAN
S2.15	PARKING CANOPY SECTIONS AND DETAILS
S2.16	PARKING CANOPY SECTIONS AND DETAILS
S2.17	PARKING CANOPY SECTIONS AND DETAILS
S2.18	ACCESS PLATFORM

DRAWING INDEX (CONT.)

DWG NO.	TITLE
	STRUCTURAL - TIMBER DECK
S3.01	TIMBER DECK PARTIAL PLAN
S3.02	TIMBER DECK SECTION
S3.03	TIMBER DECK FRAMING PLAN
S3.04	TIMBER DECK OVER FRAMING
S3.05	PILE CAP PLAN
S3.06	PILE CAP PLAN
S3.07	ADA APPROACH RAMP ELEVATION AND SECTION
S3.08	TIMBER DECK SECTIONS AND DETAILS
S3.09	TIMBER OVER FRAMING DETAILS
S3.10	PEDESTRIAN GUARDRAIL ELEVATION
S3.11	PEDESTRIAN GUARDRAIL DETAILS
S3.12	PEDESTRIAN GUARDRAIL SECTION AND DETAILS
	STRUCTURAL - TIMBER DECK MODIFICATION
S4.01	SEAWALK MODIFICATIONS PLAN / ELEVATION
S4.02	SEAWALK MODIFICATIONS PLAN AND SECTIONS
S4.03	SEAWALK MODIFICATION DETAILS
S4.04	SEAWALK DECK MODIFICATION DETAILS
S4.05	SEAWALK DECK MODIFICATION DETAILS
	STRUCTURAL - ANODES
S5.01	PILE ANODES
	LANDSCAPE
L1.01	CONCRETE PAVING FINISH LAYOUT PLAN
	ELECTRICAL
E1.01	OVERALL SITE PLAN - ELECTRICAL 1 OF 3
E1.02	OVERALL SITE PLAN - ELECTRICAL 2 OF 3
E1.03	OVERALL SITE PLAN - ELECTRICAL 3 OF 3
E1.04	PARTIAL CONCRETE DECK & TRENCH DETAIL - ELECTRICAL
E2.01	SINGLE LINE DIAGRAM
E2.02	EQUIPMENT & PANEL SCHEDULES
E2.03	ELECTRICAL RACK ELEVATION
E3.01	20' POLE DETAILS
E3.02	12' POLE DETAILS, LIGHT POLE TABLE & LUMINAIRE SCHEDULE
E3.03	LTG CONTROL SCHEMATIC & FUTURE POWER SINGLE LINE
E3.04	PARKING CANOPY PLAN - ELECTRICAL
E3.05	PARKING CANOPY SECTIONS AND DETAILS - ELECTRICAL
E4.01	FIBER CABLE RISER DIAGRAM
E4.02	EXISTING & NEW ACS RISER DIAGRAM
E4.03	CAMERA SCHISMATIC

CITY & BOROUGH OF JUNEAU DOCKS & HARBORS

REVISIONS

REV.	DATE	DESCRIPTION	DWN.	CKD.	APP.

PND ENGINEERS, INC.
9360 Glacier Highway Ste 100
Juneau, Alaska 99801
Phone: 907-586-2093
Fax: 907-586-2099
www.pndengineers.com

DESIGN: PJD CHECKED: CRS
DRAWN: PJD APPROVED: CRS
SCALE: NA
DATE: 5/23/2019

STATE OF ALASKA 49TH — Charles R. Somerville CE-8845 — REGISTERED PROFESSIONAL ENGINEER

DOWNTOWN WATERFRONT IMPROVEMENTS
PHASE I
CBJ CONTRACT NO. DH19-014

SHEET TITLE: **DRAWING INDEX**

PND PROJECT NO.: 182045 C.A.N. NO.: AECC250

G1.02

GENERAL NOTES

1. **EROSION AND POLLUTION CONTROL PLANS**

   THE CONTRACTOR SHALL DEVELOP AND SUBMIT FOR ENGINEER AND AGENCY REVIEW AND APPROVAL A STORM WATER POLLUTION PREVENTION PLAN (SWPPP). THIS PLAN SHALL INCLUDE AN EROSION AND SEDIMENT CONTROL PLAN BASED UPON THE CONTRACTOR'S SCHEDULING, EQUIPMENT AND WORK. TO THE GREATEST EXTENT POSSIBLE FOLLOW THE ALASKA DEPARTMENT OF TRANSPORTATION AND PUBLIC FACILITIES (ADOT/PF) ALASKA STORM WATER POLLUTION PREVENTION PLAN GUIDE (ASWPPPG). THE PLAN SHALL CONSIDER FIRST PREVENTING EROSION, THEN MINIMIZING AND TRAPPING SEDIMENT PRIOR TO ITS ENTERING THE WATERWAYS. THE PLAN MUST ADDRESS THE SITE-SPECIFIC CONTROLS AND MANAGEMENT FOR THE CONSTRUCTION SITE AS WELL AS ALL MATERIAL SITES, WASTE DISPOSAL SITES AND AFFECTED AREAS. THE PLAN MUST INCORPORATE ALL THE REQUIREMENTS OF THE PROJECT PERMITS. BEST MANAGEMENT PRACTICES AS LISTED IN THE ASWPPPG SHALL BE USED.

   THE CONTRACTOR SHALL PREPARE A HAZARDOUS MATERIAL CONTROL PLAN (HMCP) FOR THE HANDLING, STORAGE, CLEAN-UP AND DISPOSAL OF PETROLEUM AND OTHER HAZARDOUS SUBSTANCES. THE CONTRACTOR SHALL LIST AND GIVE LOCATIONS OF ALL HAZARDOUS MATERIALS, INCLUDING FIELD OFFICE MATERIALS, TO BE USED AND STORED ON-SITE AND THEIR ESTIMATED QUANTITIES. THE PLAN SHALL PROVIDE DETAILS FOR STORING THESE MATERIALS AS WELL AS DISPOSING WASTE PETROLEUM PRODUCTS AND OTHER HAZARDOUS MATERIALS GENERATED BY THE PROJECT.

   IDENTIFY THE LOCATIONS WHERE HAZARDOUS MATERIAL STORAGE, FUELING AND MAINTENANCE ACTIVITIES WILL TAKE PLACE. IF ON-SITE, DESCRIBE THE MAINTENANCE ACTIVITIES AND LIST ALL CONTROLS TO PREVENT THE ACCIDENTAL SPILLAGE OF OIL, PETROLEUM PRODUCTS AND OTHER HAZARDOUS MATERIALS. DETAIL PROCEDURES FOR CONTAINMENT AND CLEANUP OF HAZARDOUS SUBSTANCES INCLUDING A LIST OF THE TYPES AND QUANTITIES OF EQUIPMENT AND MATERIALS AVAILABLE ON-SITE TO BE USED.

   THE PLAN SHALL PROVIDE DETAILS FOR PREVENTION, CONTAINMENT, CLEAN-UP AND DISPOSAL OF SOIL AND WATER CONTAMINATED BY ACCIDENTAL SPILLS AND FOR UNEXPECTED CONTAMINATED SOIL AND WATER ENCOUNTERED DURING CONSTRUCTION.

2. MATCH EXISTING GRADES AT PROJECT LIMITS AND WHERE REQUIRED TO MATCH ELEVATIONS AT EXISTING ROADS.

3. ALL REMOVED MATERIALS THAT ARE NOT SUITABLE FOR REUSE ON THE PROJECT SHALL BECOME THE PROPERTY OF THE CONTRACTOR AND PROPERLY DISPOSED OF AT AN APPROVED SITE.

4. THE LOCATIONS OF EXISTING FEATURES AND UTILITIES SHOWN ON THE DRAWINGS ARE APPROXIMATE. ADDITIONAL UTILITIES MAY BE PRESENT HOWEVER ARE NOT SHOWN. THE CONTRACTOR SHALL VERIFY ALL UTILITY LOCATIONS IN THE FIELD AS NECESSARY, PRIOR TO BEGINNING WORK. THE HORIZONTAL AND VERTICAL LOCATIONS OF ALL UTILITIES ENCOUNTERED IN THE FIELD SHALL BE RECORDED ON THE CONTRACTOR'S RECORD DRAWINGS. CONTACT LOCAL UTILITY COMPANIES PRIOR TO ANY/ ALL EXCAVATIONS AT THE FOLLOWING TELEPHONE NUMBERS:

DIAL BEFORE YOU DIG!
586-1333
UNDERGROUND POWER, TELEPHONE, T.V., COMMUNICATIONS, WATER AND SEWER LINES ARE IN THE AREA. UTILITIES SHOWN HERE DO NOT SUBSTITUTE FOR FIELD LOCATES.

5. CBJ ENGINEERING STANDARD DETAILS BOOK DATED APRIL, 2011 IS MADE A PART OF THIS CONTRACT, WITH CURRENT REVISIONS AS APPLICABLE. ADOT&PF STANDARD DETAILS, LATEST VERSION, ARE MADE A PART OF THIS CONTRACT.

6. PROPERTY DISTURBED DURING CONSTRUCTION OUTSIDE OF PROJECT LIMITS SHALL BE RESTORED TO ITS PRE-CONSTRUCTION CONDITION OR BETTER AT NO ADDITIONAL COST.

7. GRADING AND ALIGNMENT OF PIPE, STRUCTURES & FINAL SURFACING ARE SUBJECT TO MINOR REVISIONS BY THE ENGINEER TO FIT SITE CONDITIONS. GRADE ALL IMPROVEMENTS WITH POSITIVE DRAINAGE AWAY FROM STRUCTURES.

8. PROPERTY LINE LOCATIONS USED IN THESE PLANS ARE DERIVED FROM RECORD PLATS AND DO NOT REPRESENT A BOUNDARY SURVEY.

LEGEND

EXISTING	THIS PROJECT	
T		TELEPHONE PEDESTAL
V		TELEVISION PEDESTAL
E		ELECTRICAL PEDESTAL
OHE$_X$		OVERHEAD ELECTRICAL
FO^U_X		BURIED FUEL LINE
E^U_X		ELECTRICAL (UNDERGROUND)
W$_X$	W$_N$	WATER
SS$_X$	SS$_N$	SANITARY SEWER
ROW		RIGHT-OF-WAY
C^U_X		COMMUNICATION (CABLE/TEL)
SD$_X$	1	STORM DRAIN
FM$_X$	FM	FORCE MAIN
	? ?	ESTIMATION OF LAYER
		PROPERTY LINE
		CROWN
X X		GEOTEXTILE FABRIC
		GUARDRAIL
		GUY WIRE ANCHOR
		SURVEY CONTROL
O^{UP}		UTILITY POLE
TMH		TELEPHONE VAULT
		BOLLARD
		CURB & GUTTER
E		ELECTRICAL TRANSFORMER
EMH		ELECTRICAL VAULT
H		ELECTRICAL HANDHOLE
		FIRE HYDRANT
	5	LAYOUT POINT
		LAYOUT RADIUS
		LUMINAIRE POLE
		TRAFFIC SIGNAL
SSMH	SSMH	SANITARY SEWER MANHOLE
SDMH	SDMH	STORM DRAIN MANHOLE
	OWS SDMH	
		STORM DRAIN INLET
		SIGN
		TREE/VEGETATION
		WATER VALVE

ABBREVIATIONS

A	
@	AT
AC	ASBESTOS CEMENT PIPE
ACP	ASPHALT CONCRETE PAVEMENT
ADA	AMERICANS WITH DISABILITIES ACT
ADJ	ADJUSTABLE
APF	ASSOCIATED PILE AND FITTING CORP.
APPROX. or APPX.	APPROXIMATE
ATS	ALASKA TIDELANDS SURVEY
AV	AIR RELEASE VALVE
B	
BCC	BEGINNING OF CURB CUT
BFV	BUTTERFLY VALVE
BLDG	BUILDING
BOP	BEGINNING OF PROJECT
BTM, BOT	BOTTOM
BTWN	BETWEEN
C	
C&G	CURB & GUTTER
CB	CATCH BASIN
CBJ	CITY & BOROUGH OF JUNEAU
CI	CAST IRON
CIP	CAST-IN-PLACE
CJ	CONTROL JOINT
℄	CENTER LINE
CLR	CLEAR
CMP	CORRUGATED METAL PIPE
CO	CLEANOUT
C.O.E.	CORPS OF ENGINEERS
COMM	COMMUNICATION
CONC.	CONCRETE
CP	COMPLETE PENETRATION
CPEP/CPP	CORRUGATED POLYETHYLENE PIPE
COR	CORNER
CSC	COUNTERSINK
CTE	CONNECT TO EXISTING
CTR	CENTER
CY	CUBIC YARD
D	
DCP	DISSIMILAR PIPE COUPLING
D/DIA	DIAMETER
DBL	DOUBLE
DEMO	DEMOLITION
DL	DEAD LOAD
DIP	DUCTILE IRON PIPE
DIM	DIMENSION
DN	DOWN
DTL	DETAIL
E	
E	EAST
EA.	EACH
EC	EDGE OF CONCRETE
ECC	END OF CURB CUT
EG	EXISTING GRADE
EJ	EXPANSION JOINT
EL/ELEV	ELEVATION
ELEL	ELECTRICAL
EOP	END OF PAVEMENT
EQ	EQUAL
EQUIP	EQUIPMENT
EST	ESTIMATE
EW	EACH WAY
EXC	EXCAVATE
EXIST	EXISTING
F	
FC	FACE OF CURB
FD	FLOOR DRAIN
FF	FINISHED FLOOR
FG	FINISHED GRADE
FH	FIRE HYDRANT, FLAT HEAD
FIN	FINISH (ED)
FM	FORCE MAIN SEWER
FND	FOUNDATION
FOC	FACE OF CURB
FT	FOOT
FTG	FOOTING
FL	FLOWLINE OR FLANGE
G	
GALV	GALVANIZED
GB	GRADE BREAK
GRD	GROUND
GRS	GALVANIZED RIGID STEEL
GV	GATE VALVE
H	
H&T	HUB & TACK
HD	HEAVY DUTY
HDG	HOT-DIPPED GALVANIZED
HDPE	HIGH DENSITY POLYETHYLENE
HORIZ	HORIZONTAL
HSE	HOUSE
HT	HEIGHT
HWY.	HIGHWAY
I	
IAW	IN ACCORDANCE WITH
ID	INSIDE DIAMETER
IE	INVERT ELEVATION
IN	INCH
IP	IRON PIPE
INCL	INCLUDE (D) (ING)
INSUL	INSULATE (D) (ION)
INV	INVERT
J	
JB	JUNCTION BOX
L	
LBS	POUNDS
LF	LINEAR FEET
LL	LIVE LOAD
LOC	LOCATION
LS	LUMP SUM
M	
MAX	MAXIMUM
M.E.	MATCH EXISTING
MECH	MECHANICAL
MFR	MANUFACTURE (R)
MH	MANHOLE
MJ	MECHANICAL JOINT
MI	MALLEABLE IRON
MIN	MINIMUM
MLLW	MEAN LOWER LOW WATER
MSF	1000 SQUARE FEET
MSE	MECHANICALLY STABILIZED EARTH
MTL	MATERIAL (S)
N	
N	NORTH
NFS	NON FROST SUSCEPTIBLE
NIC	NOT IN CONTRACT
NO	NUMBER
NTS	NOT TO SCALE
O	
OBD	OVERBURDEN
OC	ON CENTER
OD	OUTSIDE DIAMETER
OG	ORIGINAL GOUND
OHE	OVERHEAD ELECTRICAL
OS	OWNER SUPPLIED
OWS	OIL-WATER SEPARATOR
OPP	OPPSITE
P	
P	PIPE
PC	POINT OF CURVATURE, PIECE
PCC	PRECAST CONCRATE
	POINT OF COMPOUND CURVATURE
PE	POLYETHYLENE
PED	PEDESTAL
PER	PERIMETER
PERF	PERFORATE (D)
PI	POINT OF INTERSECTION
PLWD	PLYWOOD
PL	PROPERTY LINE, PLATE
POC	POINT OF CURVE
PP	POLYPROPYLENE
PRC	POINT OF REVERSE CURVATURE
PROJ	PROJECT
PRKG	PARKING
PRV	PRESSURE REDUCING VALVE
PSI	POUND PER SQUARE INCH
PT	POINT, PRESSURE TREATED, POINT OF TANGENCY
PVC	POINT OF VERTICAL CURVATURE, POLY-VINYL CHLORIDE
PVI	POINT OF VERTICAL INTERSECTION
Q	
QTY	QUANTITY
R	
RAD	RADIUS
RE	RIM ELEVATION
REF	REFERENCE
REINF	REINFORCEMENT
REQD	REQUIRED
RET	RETAINING
RO	ROUGH OPENING
ROW	RIGHT OF WAY
S	
S	SOUTH
SCHED/SCH	SCHEDULE
SD	STORM DRAIN
SDI	STORM DRAIN INLET STRUCTURE
SDO	STORM DRAIN OUTLET STRUCTURE
SDR	STANDARD DIMENSION RATIO
SF	SQUARE FOOT
SHLDR	SHOULDER
SI	STREET INTERSECTION
SPEC	SPECIFICATION (S)
SQ	SQUARE
SRB	SHOT ROCK BORROW
SSC	SANITARY SEWER CONNECTION
SS	STAINLESS STEEL, SANITARY SEWER
SDMH	STORM DRAIN MANHOLE
SSMH	SANITARY SEWER MANHOLE
STA	STATION
STD	STANDARD
STL	STEEL
STRG	STRONG
SW	SIDEWALK
SWR	SEWER
SY	SQUARE YARD
SYM	SYMMETRICAL
T	
t	THICK
T&B	TOP AND BOTTOM
T&G	TONGUE AND GROOVE
TBC	TOP BACK OF CURB
TBD	TO BE DETERMINED
TBM	TEMPORARY BENCH MARK
TD	TRENCH DRAIN
TEL	TELEPHONE
TEMP	TEMPERATURE, TEMPORARY
TH	TEST HOLE
THK	THICK
TRANS	TRANSVERSE
TV	TELEVISION
TYP	TYPICAL
U	
UAMH	UTILITY ACCESS MANHOLE
UBC	UNIFORM BUILDING CODE
UE	UNDERGROUND ELECTRIC
UMC	UNIFORM MECHANICAL CODE
UHMW	ULTRA HIGH MOLECULAR WEIGHT
UON/UNO	UNLESS OTHERWISE NOTED
UPC	UNIFORM PLUMBING CODE
V	
VB	VALVE BOX
VERT	VERTICAL
VG	VALLEY GUTTER
W	
W	WEST
W/	WITH
WD	WOOD
WELDMT	WELDMENT
WL	WATERLINE
WQU	WATER QUALITY UNIT
WV	WATER VALVE
WW	WATER WATER
WWTP	WASTE WATER TREATMENT PLANT
W/O	WITHOUT
X	
XFMR	TRANSFORMER
<PT	ANGLE POINT

CITY & BOROUGH OF JUNEAU — DOCKS & HARBORS

REVISIONS

REV.	DATE	DESCRIPTION	DWN.	CKD.	APP.

PND ENGINEERS, INC.
9360 Glacier Highway Ste 100
Juneau, Alaska 99801
Phone: 907-586-2093
Fax: 907-586-2099
www.pndengineers.com

DESIGN: CRS CHECKED: CRS
DRAWN: PJD APPROVED: CRS
SCALE: AS SHOWN
DATE: 5/23/2019

STATE OF ALASKA — 49TH — Charles R. Somerville CE-8845 — REGISTERED PROFESSIONAL ENGINEER

DOWNTOWN WATERFRONT IMPROVEMENTS PHASE I
CBJ CONTRACT NO. DH19-014

SHEET TITLE: **GENERAL NOTES LEGEND AND ABBREVIATIONS**

PND PROJECT NO.: 182045 C.A.N. NO.: AECC250

G1.03

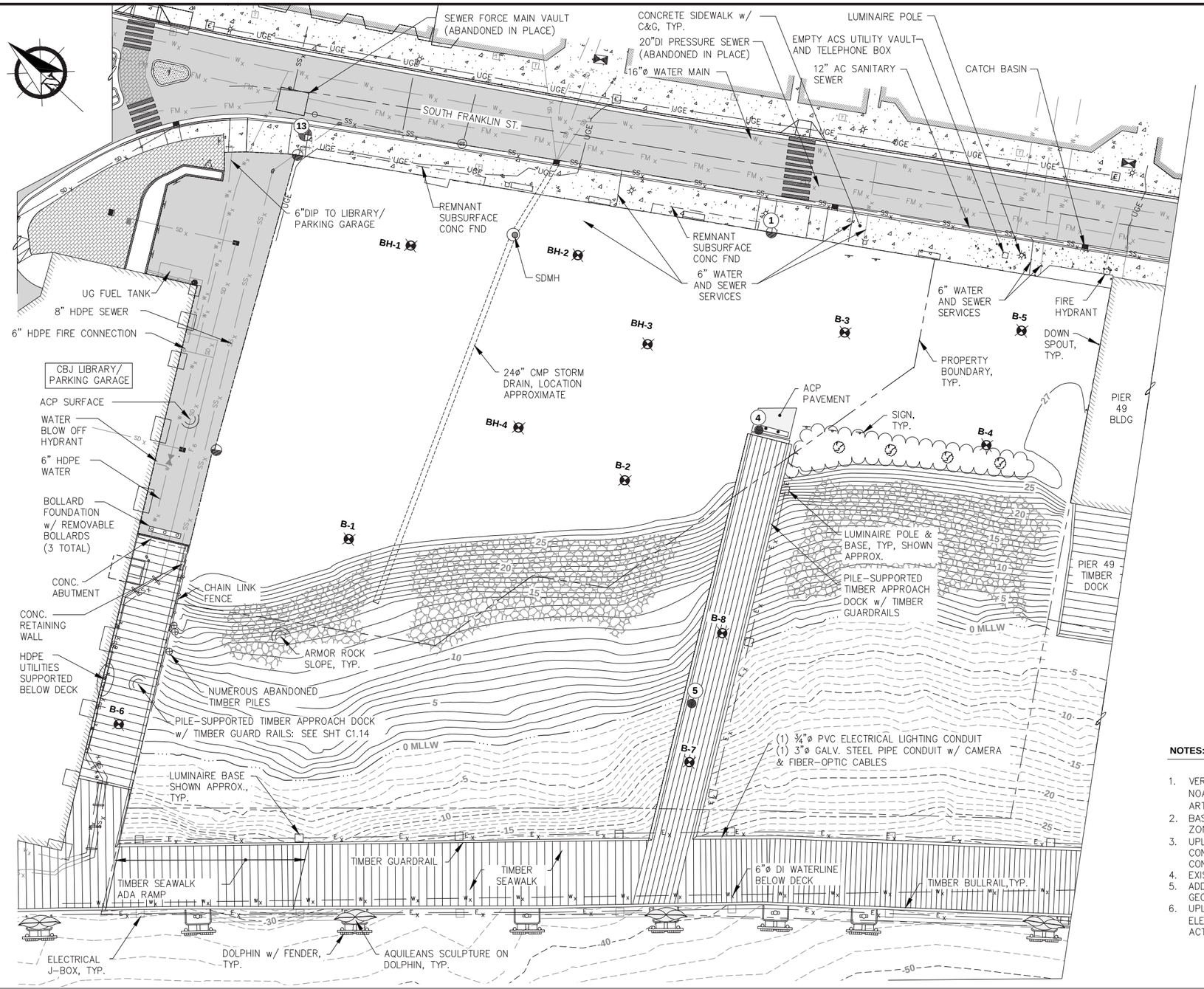

SURVEY CONTROL TABLE

POINT	NORTHING	EASTING	ELEV. (FT)	DESCRIPTION
1	2361748.24	2544358.72	27.63	FND RBR
4	2361701.84	2544298.28	27.89	PK NAIL
5	2361649.44	2544208.96	28.24	PK NAIL
13	2361898.34	2544259.15	28.26	FND MONUMENT

LEGEND

B-1 — **PND ENGINEERS, INC.: BOREHOLE, (2018)**

BH-1 — **PND ENGINEERS, INC.: BOREHOLE, (2016)**

NOTES:

1. VERTICAL DATUM IS MEAN LOWER LOW WATER (MLLW = 0 FEET) BASED ON A GPS RTK TIE TO NOAA BENCH MARK "2210 K 2011" LOCATED AT THE BASE OF A FLAGPOLE BY THE JUNEAU ARTS/CULTURE CENTER WITH A PUBLISHED ELEVATION OF 27.10' MLLW.
2. BASIS OF COORDINATES FOR THIS SURVEY ARE NAD 83 (2011) ALASKA STATE PLANE ZONE 1 IN U.S. SURVEY FEET.
3. UPLAND TOPOGRAPHY BASED UPON COMBINED FIELD SURVEYS BY PND ENGINEERS, INC. (PND) CONDUCTED IN 2017 AND 2018. BATHYMETRY BASED UPON COMBINED BATHYMETRIC SURVEYS CONDUCTED BY WILLIAMS AND ASSOCIATES, 2011 AND PND 2017.
4. EXISTING UTILITIES ARE SHOWN APPROXIMATELY BETWEEN SURVEY POINTS.
5. ADDITIONAL GEOTECHNICAL DATA IS AVAILABLE IN THE DOWNTOWN WATERFRONT IMPROVEMENTS GEOTECHNICAL REPORT, DATED APRIL 2019, PREPARED BY PND.
6. UPLANDS TOPOGRAPHIC CONTOURS UNAVAILABLE DUE TO ONGOING DEMOLITION ACTIVITIES. UPLAND ELEVATIONS TO VARY FROM +27' TO +29' MLLW FOLLOWING COMPLETION OF DEMOLITION ACTIVITIES.

CITY & BOROUGH OF JUNEAU — DOCKS & HARBORS

REVISIONS

REV.	DATE	DESCRIPTION	DWN.	CKD.	APP.

P N D ENGINEERS, INC.
9360 Glacier Highway Ste 100
Juneau, Alaska 99801
Phone: 907-586-2093
Fax: 907-586-2099
www.pndengineers.com

DESIGN: CRS CHECKED: CRS
DRAWN: PJD APPROVED: CRS
SCALE: SCALE IN FEET 0 20 40 FT.

STATE OF ALASKA 49TH — Charles R. Somerville CE-8845 — REGISTERED PROFESSIONAL ENGINEER
DATE: 5/23/2019

DOWNTOWN WATERFRONT IMPROVEMENTS PHASE I
CBJ CONTRACT NO. DH19-014

SHEET TITLE: **EXISTING CONDITIONS, SURVEY CONTROL AND BOREHOLE LOCATIONS**

PND PROJECT NO.: 182045 C.A.N. NO.: AECC250

G1.04

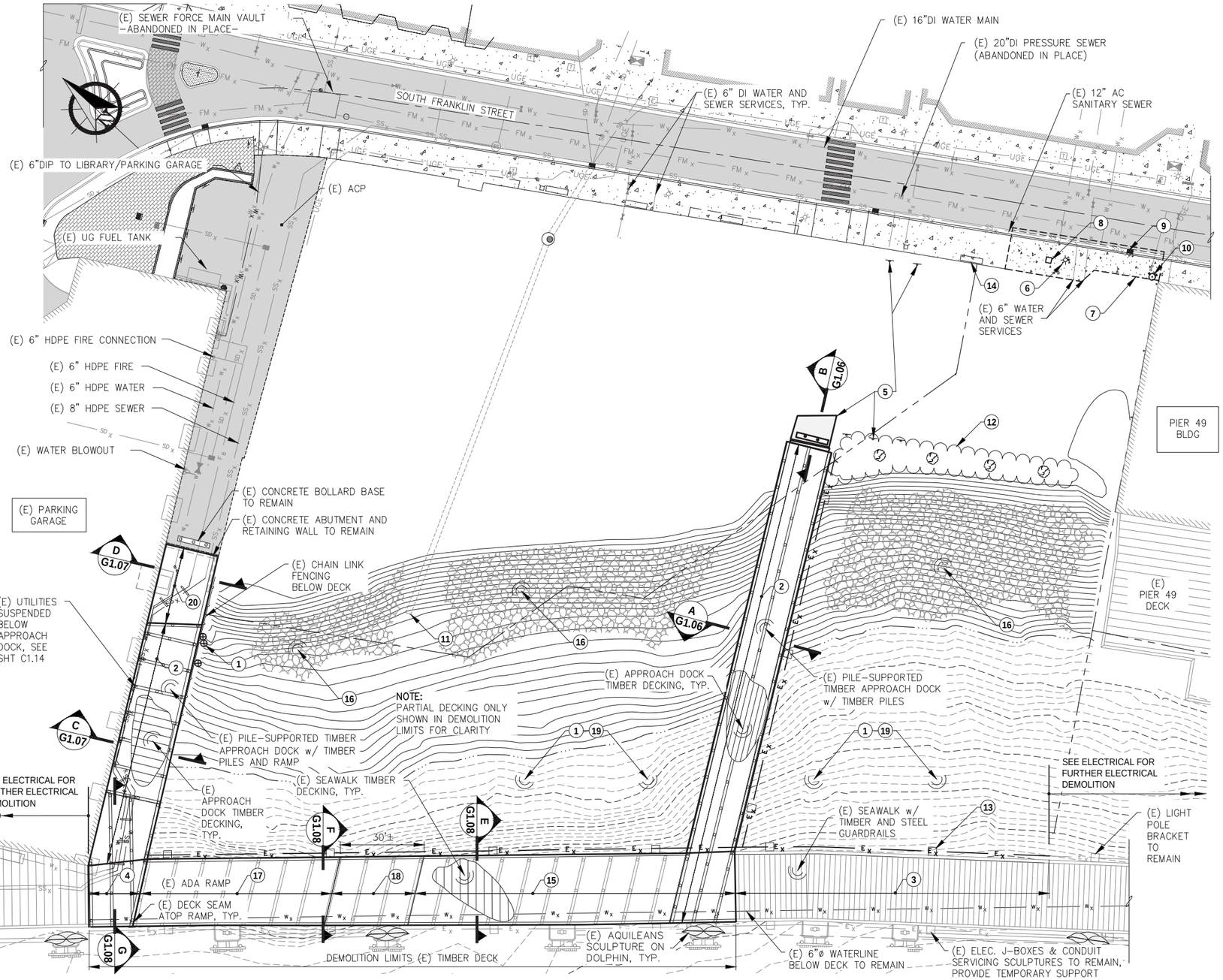

GENERAL NOTES

A	ALL DEMOLISHED TIMBER PILES, CAPS, STRINGERS, DECKING AND ASSOCIATED MATERIALS SHALL BECOME PROPERTY OF THE CONTRACTOR AND SHALL BE REMOVED FROM SITE AND DISPOSED.
B	(E) INDICATES EXISTING ENTITIES.
C	CONTRACTOR SHALL REMOVE ALL (E) PILES IN THEIR ENTIRETY BELOW NEW DOCK FRAMING LIMITS.
D	SAFETY BARRIERS SHALL BE PROVIDED ALONG (E) SEAWALK ONCE (E) GUARDRAIL IS REMOVED & SHALL REMAIN UNTIL PERMANENT IMPROVEMENTS ARE COMPLETED.
E	SEAWALK IS TO REMAIN OPEN TO PUBLIC DURING CONSTRUCTION. SHORT CLOSURES WILL BE EVALUATED ON A CASE BY CASE BASIS FOR SAFETY DURING CONSTRUCTION ACTIVITIES.

DEMOLITION SUMMARY

1	DEMOLISH ALL (E) ABANDONED TIMBER PILES & CONCRETE SECTIONS.
2	DEMOLISH (E) TIMBER DOCK INCLUDING ALL FENCING, DECKING, STRINGERS, CAPS, GUARDRAILS AND PILES; EXTRACT (E) TIMBER PILES IN THEIR ENTIRETY; TEMPORARILY SUPPORT (E) UTILITIES.
3	DEMOLISH (E) TIMBER & STEEL GUARDRAIL ALONG SHORE SIDE OF SEAWALK.
4	DEMOLISH (E) DECKING AND BULLRAIL
5	DEMOLISH (E) CONCRETE ABUTMENT & ACP; SALVAGE ALL SIGNS, BOLLARDS AND BOLLARD BASES.
6	SALVAGE (E) LUMINAIRE AND LIGHT POLE.
7	DEMOLISH (E) CONCRETE SIDEWALK, CURB AND GUTTER.
8	SALVAGE (E) ACS UTILITY VAULT – SEE ELECTRICAL PLANS.
9	DEMOLISH SD CATCH BASIN INLET FRAME AND GRATE, & SHORT SECTION OF CMP TO FIT NEW STORM DRAIN INLET FRAME & GRATE.
10	DEMOLISH (E) FIRE HYDRANT – SEE CIVIL PLANS.
11	DEMOLISH CORRODED END OF (E) CMP CULVERT TO LIMITS PER ENGINEER; MAINTAIN DRAINAGE WHILE CONSTRUCTING NEW WALL.
12	CLEAR & GRUB ALL (E) VEGETATION.
13	DEMOLISH ALL (E) SHORESIDE LUMINAIRE POLES AND LUMINAIRE BASES AND (E) ELECTRICAL CONDUITS & CONDUCTORS, SEE ELECTRICAL FOR FIBER OPTIC LINE SALVAGE.
14	SALVAGE ALL (E) BENCHES ALONG SIDEWALK (4 EA).
15	DEMOLISH (E) TIMBER DECKING, BULLRAIL, GUARDRAIL. SALVAGE ELEMENTS AS SHOWN IN DETAILS.
16	SALVAGE ALL (E) ARMOR ROCK, STOCKPILE ON–SITE AND REUSE.
17	SALVAGE (E) STRINGERS; DEMOLISH (E) DECKING, BULLRAILS & GUARDRAILS.
18	DEMOLISH (E) DECKING, STRINGERS, BULLRAILS & GUARDRAILS.
19	DEMOLISH ALL OBSTRUCTIONS WITHIN 5' OF SURFACE @ NEW PILE LOCATIONS
20	SALVAGE DECKING & STRINGERS; DEMOLISH GUARDRAIL, CAPS, FENCING AND PILES; SALVAGE ABUTMENT CONNECTION PLATES; PROVIDE TEMPORARY SUPPORT FOR (E) UTILITIES

DEMOLISH = REMOVE & DISPOSE AT CONTRACTOR PROVIDED DISPOSAL SITE.

SALVAGE = REMOVE, SAVE & SUITABLY STORE AT OWNER DESIGNATED LOCATION OR RELOCATE AS SHOWN ON PLANS. OWNER'S DESIGNATED STORAGE LOCATION SHALL BE WITHIN 5 MILES OF PROJECT SITE. CONTRACTOR SHALL BE RESPONSIBLE FOR ALL TRANSPORTING, LOADING, UNLOADING AND GENERAL HANDLING OF SALVAGED MATERIALS. STORAGE OF SALVAGED MATERIALS SHALL BE COORDINATED WITH THE OWNER AT ALL TIMES. SPECIFIC LOCATIONS FOR MATERIALS TO BE SALVAGED AND STORED SHALL BE DICTATED BY THE OWNER AND SHALL BE AT THE OWNER'S SOLE DISCRETION. THE CONTRACTOR SHALL BE RESPONSIBLE FOR ANY DAMAGE INCURRED DUE TO HIS ACTIVITIES. DAMAGED MATERIALS SHALL BE REPAIRED OR REPLACED AT NO COST TO THE OWNER.

CITY & BOROUGH OF JUNEAU – DOCKS & HARBORS

REVISIONS

REV.	DATE	DESCRIPTION	DWN.	CKD.	APP.

PND ENGINEERS, INC.
9360 Glacier Highway Ste 100
Juneau, Alaska 99801
Phone: 907-586-2093
Fax: 907-586-2099
www.pndengineers.com

DESIGN: MDS CHECKED: CRS
DRAWN: PJD APPROVED: CRS
SCALE: SCALE IN FEET 0 20 40 FT.

STATE OF ALASKA 49TH – Charles R. Somerville CE-8845 – REGISTERED PROFESSIONAL ENGINEER
DATE: 5/23/2019

DOWNTOWN WATERFRONT IMPROVEMENTS PHASE I
CBJ CONTRACT NO. DH19-014

SHEET TITLE: **DEMOLITION SITE PLAN**

PND PROJECT NO.: 182045 C.A.N. NO.: AECC250

G1.05

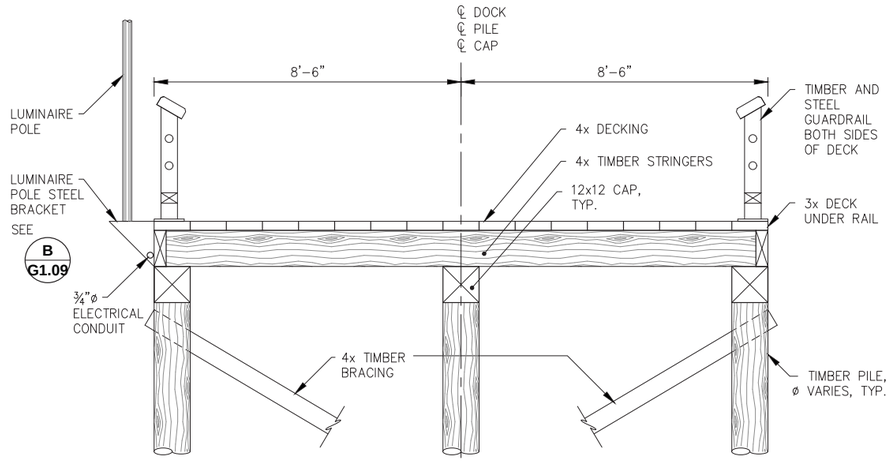

A G1.05 EXISTING APPROACH DOCK SECTION

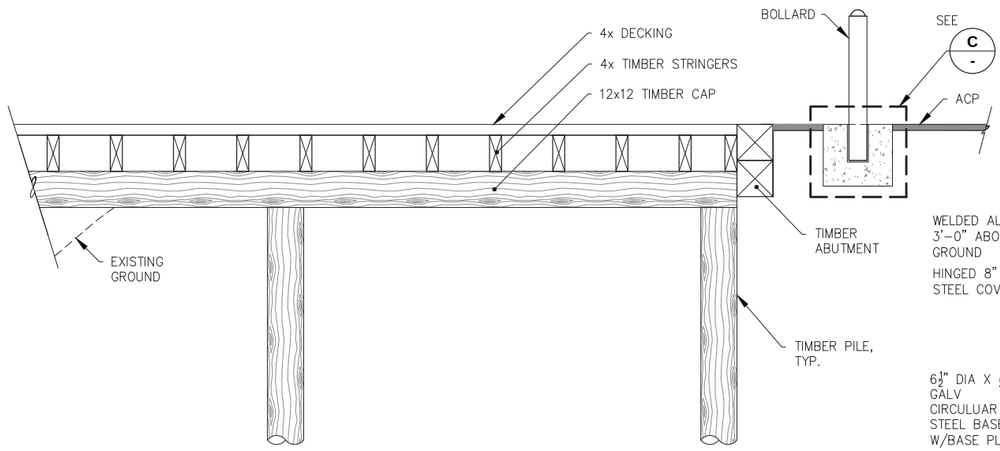

B G1.05 EXISTING APPROACH DOCK TIMBER ABUTMENT SECTION

NOTE:
GUARDRAIL, LUMINAIRE AND ELECTRICAL APPURTENANCES NOT SHOWN FOR CLARITY

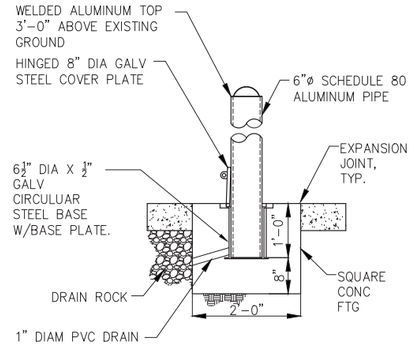

C BOLLARD BASE DETAIL







EXSTING APPROACH DOCK



EXISTING BOLLARDS AND ABUTMENT



EXISTING BOLLARDS AND APPROACH DOCK

CITY & BOROUGH OF JUNEAU DOCKS & HARBORS

REVISIONS

REV.	DATE	DESCRIPTION	DWN.	CKD.	APP.

P N D ENGINEERS, INC.
9360 Glacier Highway Ste 100
Juneau, Alaska 99801
Phone: 907-586-2093
Fax: 907-586-2099
www.pndengineers.com

DESIGN: MDS CHECKED: CRS
DRAWN: PJD APPROVED: CRS
SCALE: AS SHOWN
DATE: 5/23/2019

STATE OF ALASKA 49TH Charles R. Somerville CE-8845 REGISTERED PROFESSIONAL ENGINEER

DOWNTOWN WATERFRONT IMPROVEMENTS PHASE I
CBJ CONTRACT NO. DH19-014

SHEET TITLE: **DEMOLITION SECTIONS & PHOTOS**

PND PROJECT NO.: 182045 C.A.N. NO.: AECC250

G1.06

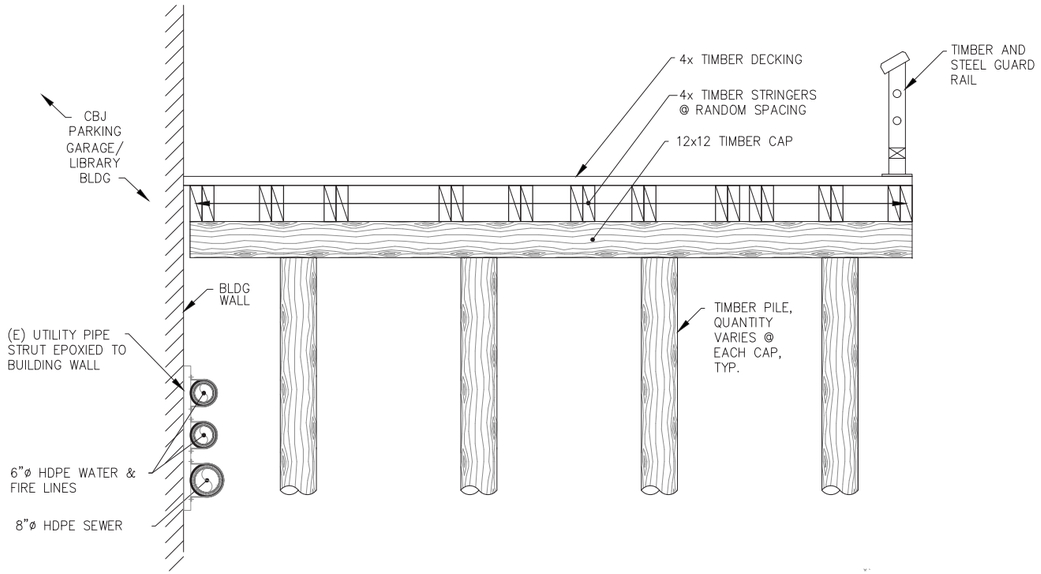

C G1.05 EXISTING APPROACH DOCK ADJACENT PARKING GARAGE SECTION

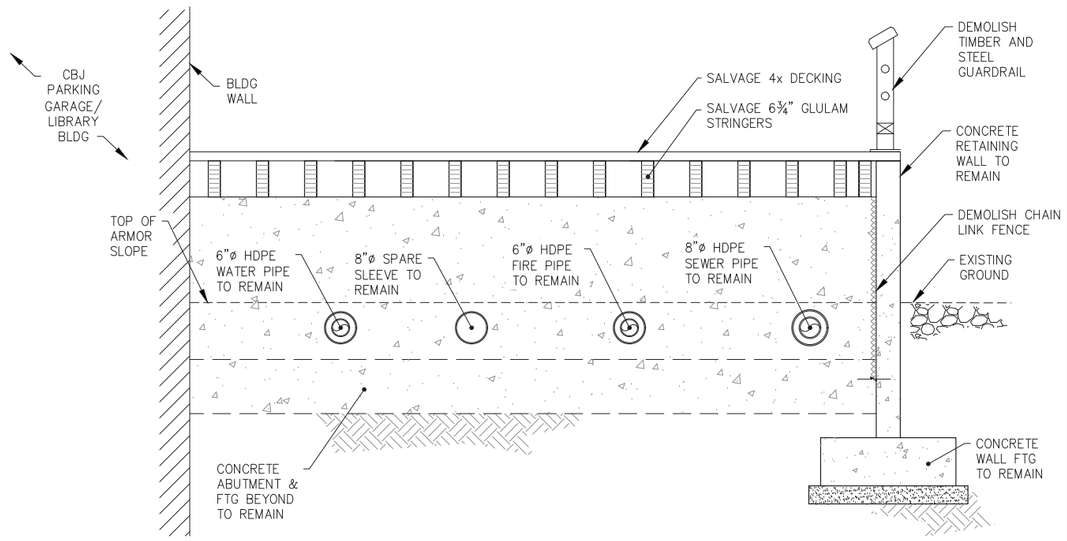

D G1.05 EXISTING APPROACH DOCK RAMP AT CONCRETE RETAINING WALL AND ABUTMENT SECTION

NOTE: STRINGERS AND CAPS ARE NOT PERPENDICULAR, AND ARE SHOWN APPROXIMATE. LOCATION, QUANTITY, SPACING AND ORIENTATION VARY THROUGHOUT STRUCTURE. DEMOLISH ALL.

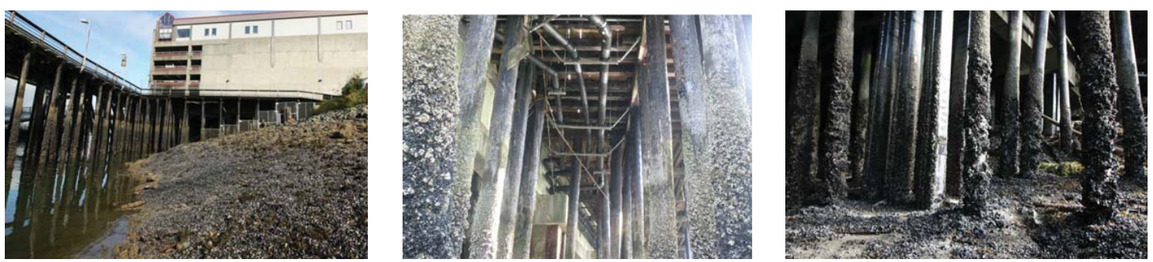

EXISTING APPROACH DOCK & UTILITIES ADJACENT PARKING GARAGE



EXISTING ABUTMENT & UTILITIES ADJACENT PARKING GARAGE

NOTE: PHOTO DURING PRIOR CONSTRUCTION PROGRESS

CITY & BOROUGH OF JUNEAU DOCKS & HARBORS

REVISIONS

REV.	DATE	DESCRIPTION	DWN.	CKD.	APP.

P N D ENGINEERS, INC.
9360 Glacier Highway Ste 100
Juneau, Alaska 99801
Phone: 907-586-2093
Fax: 907-586-2099
www.pndengineers.com

DESIGN: MDS CHECKED: CRS
DRAWN: PJD APPROVED: CRS
SCALE: AS SHOWN

STATE OF ALASKA 49TH Charles R. Somerville CE-8845 REGISTERED PROFESSIONAL ENGINEER
DATE: 5/23/2019

DOWNTOWN WATERFRONT IMPROVEMENTS PHASE I
CBJ CONTRACT NO. DH19-014

SHEET TITLE: **DEMOLITION SECTIONS & PHOTOS**

G1.07

PND PROJECT NO.: 182045 C.A.N. NO.: AECC250

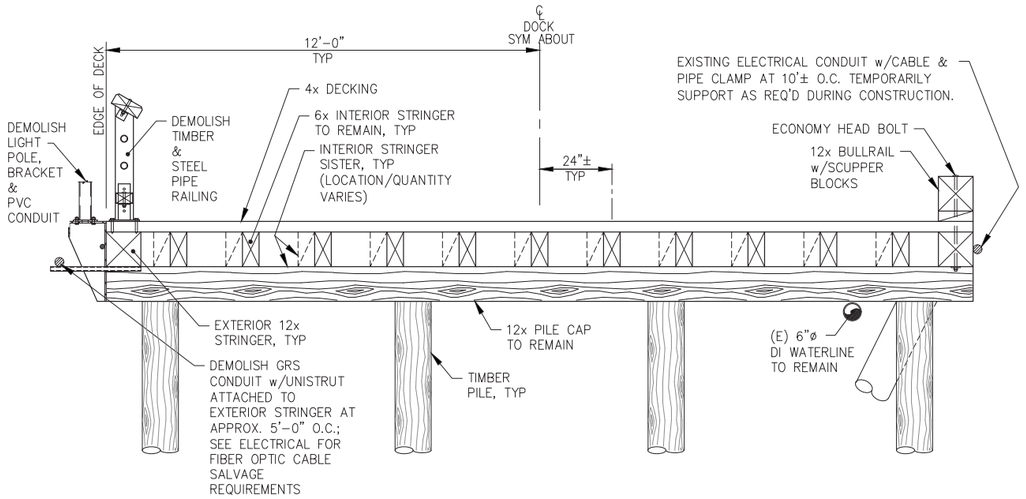

E G1.05 **SEAWALK SECTION**

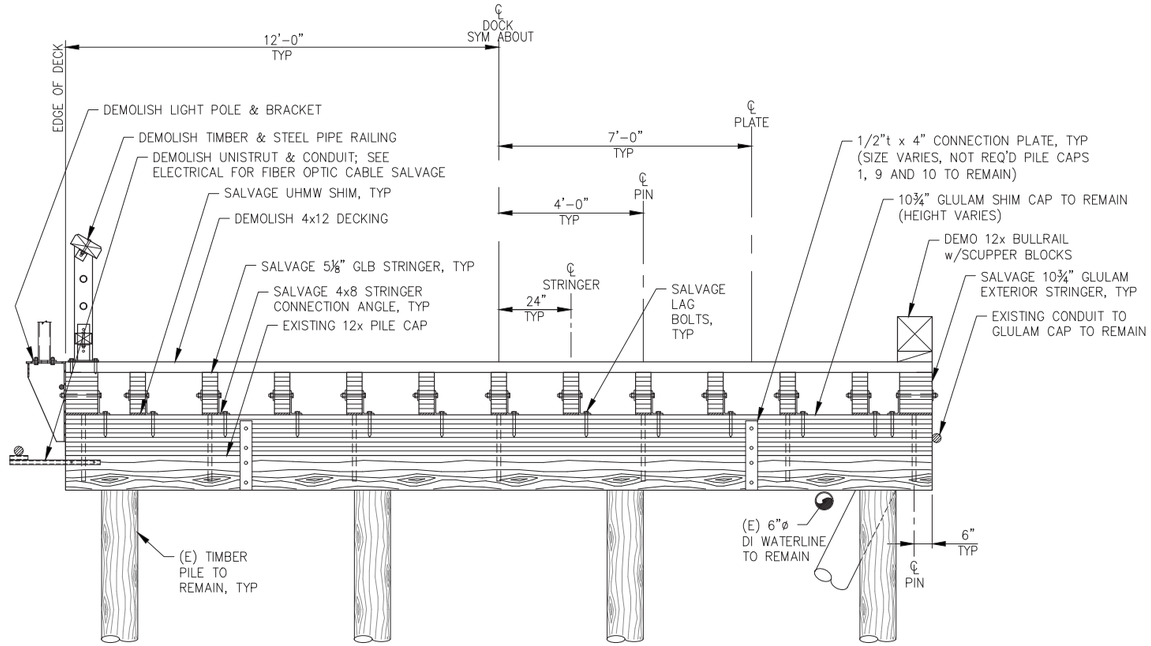

F G1.05 **SEAWALK SECTION**

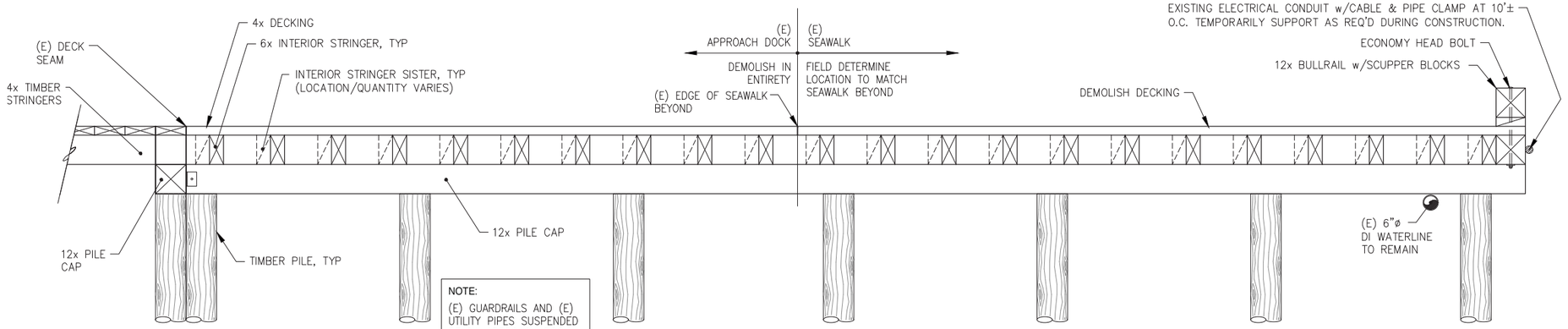

NOTE:
(E) GUARDRAILS AND (E) UTILITY PIPES SUSPENDED BELOW APPROACH DOCK DECK NOT SHOWN

G G1.05 **SEAWALK SECTION AT APPROACH DOCK**

DOCK MODIFICATIONS SCOPE OF IMPROVEMENTS

- REMOVE EXISTING GUARDRAIL, BULLRAIL & SCUPPER BLOCKS, LIGHT POLES, BRACKETS & CONDUIT AS REQUIRED. SUPPLY NEW HARDWARE FOR REINSTALLATION AS REQUIRED.
- SALVAGE EXISTING RAMP STRINGERS
- REMOVE AND DISPOSE EXISTING DECKING AND NON-RAMP STRINGERS IN THEIR ENTIRETY INCLUDING DRIFT PINS CONNECTING STRINGERS TO PILE CAPS. FILL HOLES IN EXISTING PILE CAPS TO REMAIN w/ COAL TAR MASTIC AND PLUG HOLES w/ TREATED DOWELS.
- MINOR MODIFICATION OF EXISTING BULLRAIL MAY BE REQUIRED FOR REINSTALLATION AND TO MATCH MODIFIED SLOPE OF DOCK.
- INSTALL NEW GLULAM CAPS, DECKING, SHIMS, CONNECTION ANGLES AND SALVAGED STRINGERS. AS SHOWN.
- CONTRACTOR SHALL VERIFY ALL FINAL ELEMENTS NOT SPECIFICALLY SHOWN AS REQUIRED TO PERFORM THE WORK.

NOTE:
(E) DOLPHIN NOT SHOWN

REVISIONS

REV.	DATE	DESCRIPTION	DWN.	CKD.	APP.

PND ENGINEERS, INC.
9360 Glacier Highway Ste 100
Juneau, Alaska 99801
Phone: 907-586-2093
Fax: 907-586-2099
www.pndengineers.com

DESIGN: MDS CHECKED: CRS
DRAWN: PJD APPROVED: CRS
SCALE: AS SHOWN

STATE OF ALASKA 49TH Charles R. Somerville CE-8845 REGISTERED PROFESSIONAL ENGINEER
DATE: 5/23/2019

DOWNTOWN WATERFRONT IMPROVEMENTS PHASE I
CBJ CONTRACT NO. DH19-014

SHEET TITLE: **DEMOLITION SECTIONS**

PND PROJECT NO.: 182045 C.A.N. NO.: AECC250

G1.08

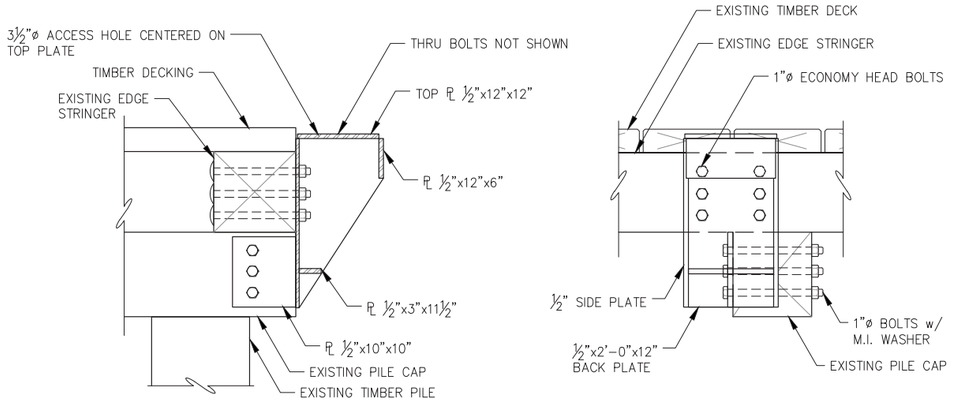

SECTION **ELEVATION**

A - EXISTING SEAWALK LIGHT POLE CONNECTION BRACKET

NOTE: GUARDRAIL & BULLRAIL NOT SHOWN FOR CLARITY.

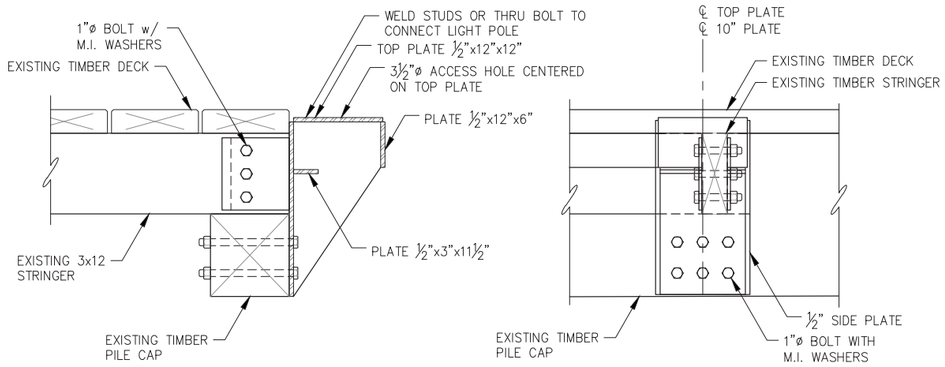

SECTION **ELEVATION**

B - TYPICAL APPROACH DOCK LIGHT POLE CONNECTION BRACKET

NOTE: GUARDRAIL NOT SHOWN FOR CLARITY

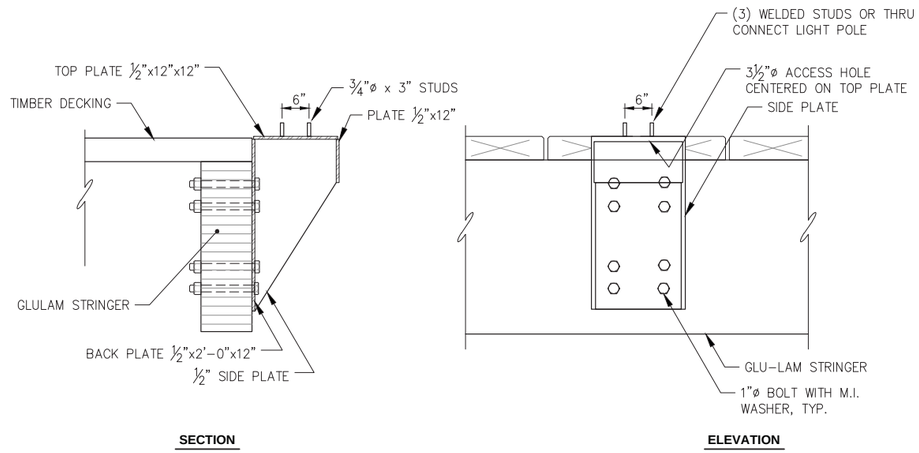

SECTION **ELEVATION**

C - EXISTING SEAWALK LIGHT POLE CONNECTION BRACKET

NOTE: GUARDRAIL & BULLRAIL NOT SHOWN FOR CLARITY.

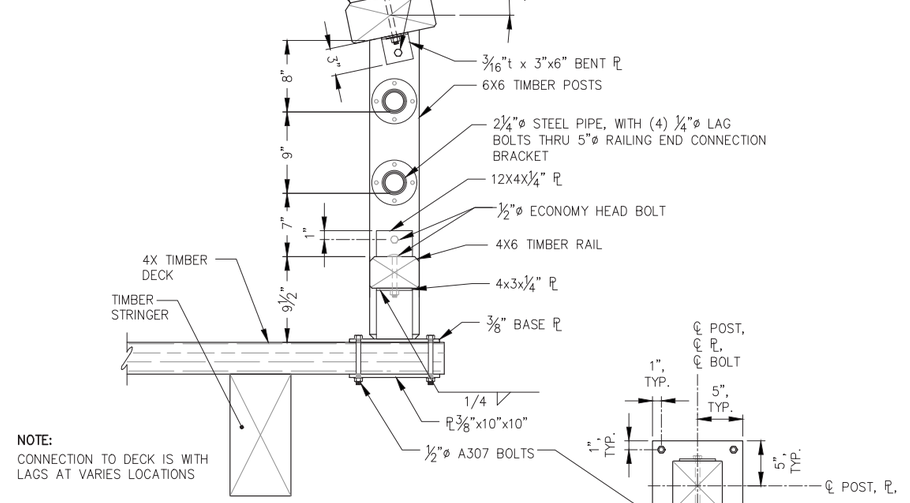

D - EXISTING GUARDRAIL DETAIL (SALVAGE)

E - BASE PLATE DETAIL

REVISIONS

REV.	DATE	DESCRIPTION	DWN.	CKD.	APP.

P N D ENGINEERS, INC.
9360 Glacier Highway Ste 100
Juneau, Alaska 99801
Phone: 907-586-2093
Fax: 907-586-2099
www.pndengineers.com

DESIGN: MDS CHECKED: CRS
DRAWN: KLL APPROVED: CRS
SCALE: AS SHOWN
DATE: 5/23/2019

STATE OF ALASKA 49TH — Charles R. Somerville CE-8845 — REGISTERED PROFESSIONAL ENGINEER

DOWNTOWN WATERFRONT IMPROVEMENTS PHASE I
CBJ CONTRACT NO. DH19-014

SHEET TITLE: **DEMOLITION DETAILS**

PND PROJECT NO.: 182045 C.A.N. NO.: AECC250

G1.09

(E) SEWER FORCE MAIN VAULT –ABANDONED IN PLACE–
(E) 16"DI WATER MAIN
(E) 20"DI PRESSURE SEWER –ABANDONED IN PLACE–
(E) 6" DI WATER AND SEWER SERVICES
34' WIDE DRIVEWAY CURB CUT
COMMUNICATION VAULT, SEE ELECTRICAL
(E) 12" AC SANITARY SEWER
SOUTH FRANKLIN ST
(E) 6"DIP TO LIBRARY/ PARKING GARAGE
(E) PROPERTY LINE, TYP.
REMNANT (E) SUBSURFACE CONC. FND
(E) SDMH
(E) BENCH, TYP.
MARINE VIEW WAY
(E) UG FUEL TANK
(E) 6" HDPE FIRE CONNECTION
(E) 8" HDPE SEWER
(E) ACP SURFACING, TYP.
(E) WATER BLOWOUT
(E) 6" HDPE WATER
CBJ PARKING GARAGE/ LIBRARY
(E) REMOVABLE BOLLARDS
APPROX. FILL LIMITS, 27.0 CONTOUR
(E) CULVERT EXTENDED THROUGH WALL w/ 30"ø PIPE SLEEVE
TIMBER PLANTER (SOILS & PLANTS **NIC**) TYP.
APPROACH DOCK TIMBER RAMP **(SEE S3.05)**
RELOCATED APPROACH DOCK UTILITIES TO CRUISE SHIP BERTH SUSPENDED BELOW DECKING **(SEE C1.15)**
OVERDECK STAGE & STAIRWAY
RAISED SEAWALK STRINGERS & DECKING
ADA RAMP
GUARDRAIL
BACKFILL WALL w/ CLASS A SHOT ROCK BORROW TO ELEV. 27.0'
CONTRACTOR STAGING AREA THROUGH APRIL 1, 2020 (INSIDE PROPERTY LINES)
CONTRACTOR STAGING AREA AFTER APRIL 1, 2020
(E) 24"ø CMP
PILE–SUPPORTED CONCRETE RETAINING WALL BELOW DECK
DECK DRAIN, TYP.
ACCESS RAMP
ACCESS HATCH
CONC PLANTER (SOILS & PLANTS **NIC**)
LUMINAIRE DESIGNATION, SEE SHT C1.03 FOR LAYOUT TABLE
CANOPY
CONCRETE PAVING, TYP.
PROPERTY LINE
SDMH
UAMH
OWS SDMH
NEW FIRE HYDRANT
PLANTER (SOILS & PLANTS **NIC**) TYP.
CONCRETE PAVING
LIFT STATION
ELECTRICAL PANELS
PIER 49 BLDG
LUMINAIRE POLE, TYP.
TRENCH DRAIN
(E) ACP
PHASE II SHELTER AND RESTROOMS BUILDING **(NIC)**
BLDG COL'S, TYP.
PROPERTY LINE, TYP.
PIER 49 TIMBER DOCK
4' WIDE SWING GATE & WALKWAY
STRIPING, TYP.
VEHICLE GUARDRAIL
(E) TIMBER APPROACH DOCK
(E) LUMINAIRE POLE BRACKET
(E) SEAWALK WITH NEW DECKING
PILE–SUPPORTED TIMBER DECK **(SEE S3.01)**
PILE–SUPPORTED CONCRETE DECK **(SEE S2.01)**
(E) SEAWALK w/ NEW DECKING
RAISED SEAWALK DECKING & STRINGERS
(E) ELEL J–BOX AND CONDUIT SERVICING AQUILEANS SCULPTURES, TYP.
VEHICLE GUARDRAIL w/ INFILL PANELS
AQUILEANS SCULPTURE ON DOLPHIN, TYP.
(E) DOLPHIN w/ FENDER, TYP.
SEE ELECTRICAL FOR LIGHTING PLAN
SEE ELECTRICAL FOR LIGHTING PLAN

CITY & BOROUGH OF JUNEAU DOCKS & HARBORS

REVISIONS

REV.	DATE	DESCRIPTION	DWN.	CKD.	APP.

P N D ENGINEERS, INC.
9360 Glacier Highway Ste 100
Juneau, Alaska 99801
Phone: 907-586-2093
Fax: 907-586-2099
www.pndengineers.com

DESIGN: MDS CHECKED: CRS
DRAWN: PJD APPROVED: CRS
SCALE: SCALE IN FEET 0 20 40 FT.

STATE OF ALASKA 49TH Charles R. Somerville CE-8845 REGISTERED PROFESSIONAL ENGINEER
DATE: 5/23/2019

DOWNTOWN WATERFRONT IMPROVEMENTS PHASE I
CBJ CONTRACT NO. DH19-014

SHEET TITLE: **OVERALL SITE PLAN**

G1.10

PND PROJECT NO.: 182045 C.A.N. NO.: AECC250

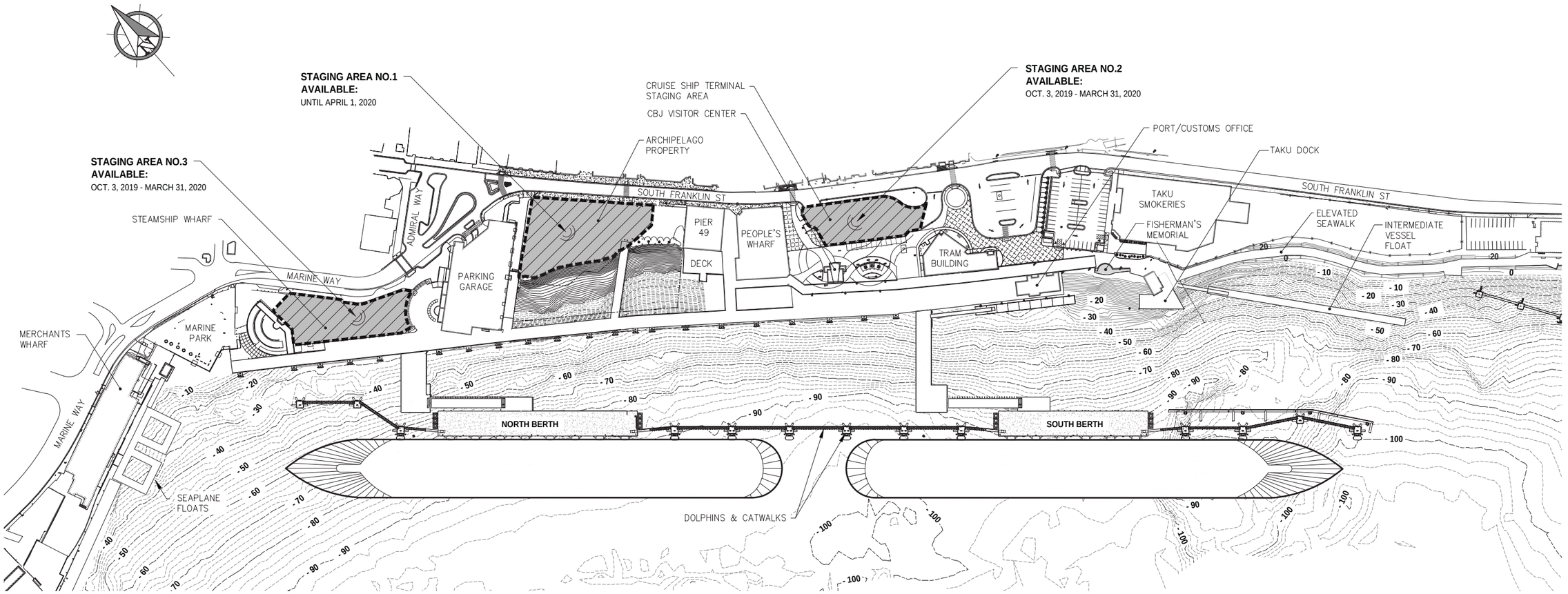

STAGING AREAS

NOTES:

1. CONTRACTOR SHALL INVENTORY EXISTING CONDITIONS WITH ENGINEER PRIOR TO USE OF ANY STAGING AREA. CONTRACTOR SHALL REPAIR ANY DAMAGES INCURRED AT STAGING AREAS DUE TO CONTRACTOR ACTIVITIES.
2. ADDITIONAL OFF-SITE STAGING AREA AVAILABLE AT "LITTLE ROCK DUMP". CONTACT PORT ENGINEER FOR DETAILS.
3. ALL OTHER STAGING AREAS SHALL BE PROVIDED BY THE CONTRACTOR.

CITY & BOROUGH OF JUNEAU — DOCKS & HARBORS

REVISIONS

REV.	DATE	DESCRIPTION	DWN.	CKD.	APP.

PND ENGINEERS, INC.
9360 Glacier Highway Ste 100
Juneau, Alaska 99801
Phone: 907-586-2093
Fax: 907-586-2099
www.pndengineers.com

DESIGN: CRS CHECKED: CRS
DRAWN: PJD APPROVED: CRS
SCALE: SCALE IN FEET 0 100 200 FT.

STATE OF ALASKA 49TH — Charles R. Somerville CE-8845 — REGISTERED PROFESSIONAL ENGINEER
DATE: 5/23/2019

DOWNTOWN WATERFRONT IMPROVEMENTS PHASE I
CBJ CONTRACT NO. DH19-014

SHEET TITLE: STAGING AREAS

PND PROJECT NO.: 182045 C.A.N. NO.: AECC250

G1.11

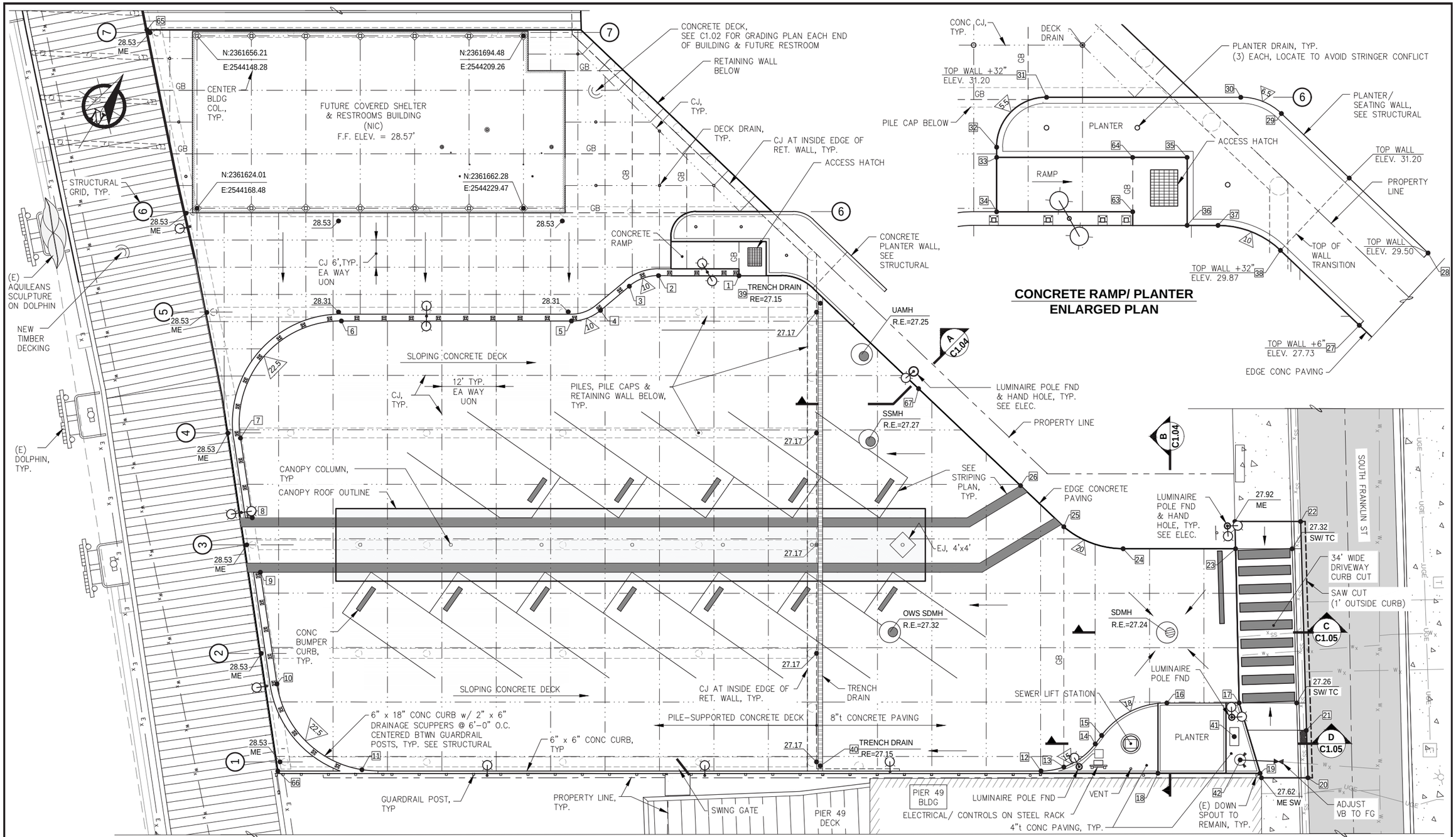

CONCRETE RAMP/ PLANTER ENLARGED PLAN

REVISIONS					
REV.	DATE	DESCRIPTION	DWN.	CKD.	APP.

CITY & BOROUGH OF JUNEAU — DOCKS & HARBORS

P N D ENGINEERS, INC.
9360 Glacier Highway Ste 100
Juneau, Alaska 99801
Phone: 907-586-2093
Fax: 907-586-2099
www.pndengineers.com

STATE OF ALASKA — 49TH — Charles R. Somerville CE-8845 — REGISTERED PROFESSIONAL ENGINEER

DESIGN: CRS CHECKED: CRS
DRAWN: PJD APPROVED: CRS
SCALE: SCALE IN FEET 0 10 20 FT.
DATE: 5/23/2019

DOWNTOWN WATERFRONT IMPROVEMENTS PHASE I
CBJ CONTRACT NO. DH19-014

SHEET TITLE: **PARTIAL SITE PLAN**

PND PROJECT NO.: 182045 C.A.N. NO.: AECC250

C1.01

Attachment G – BLD2019-0321

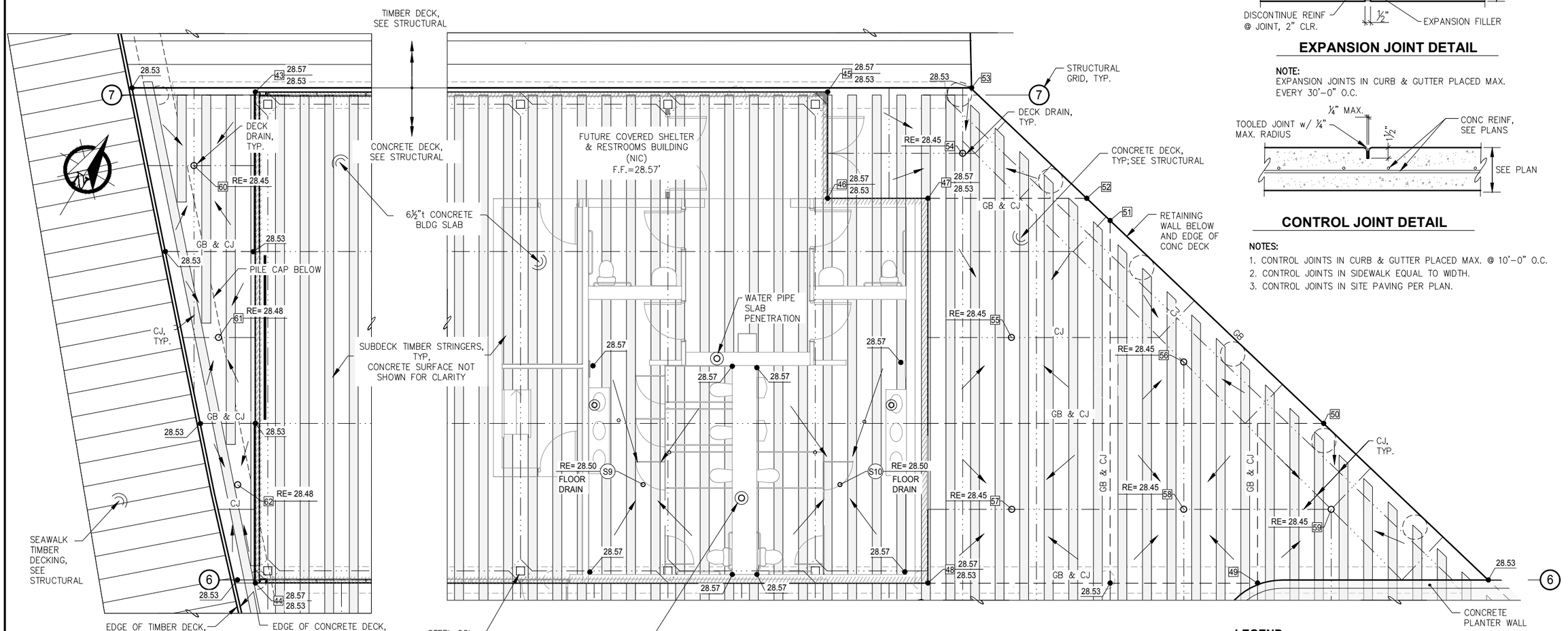

PARTIAL DECK GRADING PLAN
WEST SIDE OF BUILDING

(3) EA DECK DRAINS REQ'D.

PARTIAL DECK GRADING PLAN
EAST SIDE OF BUILDING

(6) EA DECK DRAINS REQ'D.
(2) EA FLOOR DRAINS REQ'D.

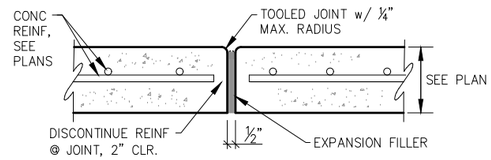

EXPANSION JOINT DETAIL

NOTE:
EXPANSION JOINTS IN CURB & GUTTER PLACED MAX. EVERY 30'-0" O.C.

CONTROL JOINT DETAIL

NOTES:
1. CONTROL JOINTS IN CURB & GUTTER PLACED MAX. @ 10'-0" O.C.
2. CONTROL JOINTS IN SIDEWALK EQUAL TO WIDTH.
3. CONTROL JOINTS IN SITE PAVING PER PLAN.

LEGEND

28.57 / 28.53 (#) — FG INTERIOR BLDG SLAB / FG EXTERIOR BLDG SLAB
CONTROL JOINT (CJ)
GRADE BREAK (GB)

NOTES:
1. FINISH GRADES SHOWN ARE TO THE TOP OF CONCRETE.
2. LOCATE DECK DRAINS BETWEEN TIMBER STRINGERS AS SHOWN; FIELD ADJUST PER ENGINEER.
3. SEE DECK DRAIN DETAIL w/ DOWNSPOUT ALIGNMENT TO AVOID CONFLICTS w/ BELOW DECK STRUCTURAL MEMBERS.
4. SEE ALSO WATER & SEWER PLAN FOR PIPE PENETRATION AND FLOOR DRAIN LOCATIONS.

CITY & BOROUGH OF JUNEAU — DOCKS & HARBORS

REVISIONS

REV.	DATE	DESCRIPTION	DWN.	CKD.	APP.

PND ENGINEERS, INC.
9360 Glacier Highway Ste 100
Juneau, Alaska 99801
Phone: 907-586-2093
Fax: 907-586-2099
www.pndengineers.com

DESIGN: CRS CHECKED: CRS
DRAWN: PJD APPROVED: CRS
SCALE: SCALE IN FEET 0 4 8 FT.

STATE OF ALASKA 49TH — Charles R. Somerville CE-8845 REGISTERED PROFESSIONAL ENGINEER
DATE: 5/23/2019

DOWNTOWN WATERFRONT IMPROVEMENTS PHASE I
CBJ CONTRACT NO. DH19-014

SHEET TITLE: **PARTIAL CONCRETE DECK GRADING PLANS**

C1.02

PND PROJECT NO.: 182045 C.A.N. NO.: AECC250

POINT LAYOUT TABLE

POINT	NORTHING	EASTING	ELEV. (FEET)	DESCRIPTION
1	2361674.95	2544277.63	27.35	CDE/ END WALL
2	2361665.52	2544262.59	27.53	CDE/ PT
3	2361660.12	2544258.39	27.58	CDE/ PC, CURB
4	2361652.24	2544255.84	27.66	CDE/ PT, CURB
5	2361646.84	2544251.64	27.73	CDE/ PC, CURB
6	2361619.88	2544208.66	28.25	CDE/ PT, CURB
7	2361586.19	2544203.53	-	CDE/ PC, CURB
8	2361572.69	2544215.08	-	CDE/ END CURB
9	2361563.47	2544222.96	-	CDE/ END CURB
10	2361544.56	2544239.15	-	CDE/ PT, CURB
11	2361538.49	2544265.08	-	CDE/ PC, CURB
12	2361617.85	2544392.08	27.65	EC/ PC, CURB
13	2361621.27	2544395.89	27.70	EC/ GB, CURB
14	2361629.27	2544399.05	27.62	EC/ PT, CURB
15	2361631.60	2544399.25	27.60	EC/ PC, CURB
16	2361645.30	2544407.62	27.45	EC/ PT, CURB
17	2361653.78	2544421.13	27.45	EC/ SW JOINT
18	2361631.13	2544414.20	28.10	TOP CURB, INTERSECT
19	2361643.12	2544433.30	28.10	TOP CURB, INTERSECT
20	2361647.87	2544442.76	27.08/ME	END CURB, PVMNT JOINT
21	2361656.52	2544436.89	-	END CURB TRANSITION, EDGE INLET
22	2361694.86	2544411.35	27.22/ME	END CURB TRANSITION, ACP JOINT
23	2361682.16	2544402.39	27.51	EC/ SW JOINT
24	2361668.98	2544381.38	27.50	EC/ PT
25	2361666.13	2544367.73	27.70	EC/ PC
26	2361668.74	2544354.83	27.60	EC
27	2361678.90	2544304.66	27.23	EC/ END WALL
28	2361689.68	2544306.84	29.50	TOP/ END WALL
29	2361694.11	2544284.96	-	RBC/ PT, WALL

POINT LAYOUT TABLE (CONT.)

POINT	NORTHING	EASTING	ELEV. (FEET)	DESCRIPTION
30	2361693.25	2544280.22	-	RBC/ PT WALL
31	2361681.87	2544262.08	28.53	CDE/ PT, WALL
32	2361674.29	2544260.34	-	PC, WALL
33	2361673.33	2544260.94	28.47	CDE/ COR WALL
34	2361668.25	2544264.13	28.41	CDE/ CURB JOINT
35	2361684.49	2544278.73	27.37	LANDING
36	2361678.14	2544282.71	27.29	LANDING
37	2361679.95	2544285.60	27.26	CDE/ PC, WALL
38	2361681.28	2544292.90	27.20	CDE/ PT, WALL
39	2361679.34	2544296.05	27.15	END TD GRATE
40	2361592.94	2544350.26	27.15	END TD GRATE
41	2361646.91	2544424.16	-	CENTER COMMUNICATION VAULT
42	SEE WATER & SEWER UTILITY PLAN			FIRE HYDRANT
43	2361656.52	2544146.90	-	BUILDING COR
44	2361622.64	2544168.16	-	BUILDING COR
45	2361695.85	2544209.58	-	BUILDING COR
46	2361688.51	2544214.19	-	BUILDING COR
47	2361692.85	2544221.10	-	BUILDING COR
48	2361666.31	2544237.76	-	BUILDING COR
49	2361680.57	2544260.49	28.53	CDE/ GB INTERSECTION
50	2361694.44	2544258.14	28.53	CDE/ GB INTERSECTION
51	2361699.21	2544234.63	28.53	CDE/ GB
52	2361699.73	2544232.06	28.53	CDE/ GB
53	2361702.37	2544219.34	28.53	CDE/ TDE JOINT
54	2544221.56	2361697.47	-	DD
55	2361686.87	2544232.89	-	DD
56	2361692.63	2544245.84	-	DD
57	2361675.03	2544240.36	-	DD
58	2361682.47	2544252.22	-	DD
59	2361688.84	2544262.38	-	DD
60	2361648.78	2544145.85	-	DD
61	2361637.99	2544154.99	-	DD
62	2361628.65	2544162.68	-	DD
63	2361676.22	2544276.83	27.37	BOTTOM RAMP, GB LANDING
64	2361681.30	2544273.64	27.43	BOTTOM RAMP, GB LANDING
65	2361651.47	2544138.21	28.53	CDE, COR
66	2361528.40	2544249.51	28.53	CDE, COR
67	2361674.90	2544324.41	27.40	EC

LUMINAIRE POINT LAYOUT TABLE

POINT	NORTHING	EASTING	FND TYPE	FOUNDATION DESCRIPTION
1	2361677.53	2544321.50	TYPE 6	CONCRETE FND
2	2361671.89	2544223.99	TYPE 4	CONCRETE FND
3	2361630.77	2544223.99	TYPE 4	CONCRETE FND
4	2361783.75	2544046.93	TYPE 5	STEEL BRACKET
5	LUMINAIRE LOCATIONS 5,6,7,8,9 AND 10 TO BE FIELD DETERMINED PER DIRECTION OF ENGINEER		TYPE 3	STEEL BRACKET
6			TYPE 3	STEEL BRACKET
7			TYPE 3	STEEL BRACKET
8			TYPE 3	STEEL BRACKET
9			TYPE 3	STEEL BRACKET
10			TYPE 3	STEEL BRACKET
11	2361552.09	2544289.16	TYPE 1	STEEL BRACKET
12	2361577.58	2544329.83	TYPE 1	STEEL BRACKET
13	2361600.00	2544364.00	TYPE 1 SIM	STEEL BRACKET
14	2361623.12	2544398.75	TYPE 7	CONCRETE FND
15	2361650.19	2544421.39	TYPE 7	CONCRETE FND
16	2361685.45	2544398.23	TYPE 6	CONCRETE FND

NOTES :

1. SEE ELECTRICAL FOR LUMINAIRE DETAILS.
2. SEE SHT G1.10 FOR LUMINAIRE LOCATIONS.
3. SEE SHEET S1.07, S1.08, AND C1.06 FOR FOUNDATION DETAILS
4. TYPE 2 LIGHT POLE BASES SHALL BE USED AT ALL EXISTING LIGHT POLE FOUNDATIONS THAT HAVE NEW LIGHT POLES INSTALLED, SEE ELECTRICAL FOR LOCATIONS.

POINT TABLE ABBREVIATIONS:

- CDE CONCRETE DECK ELEVATION
- COR CORNER
- DD DECK DRAIN
- EC EDGE OF CONCRETE PAVING
- FD FLOOR DRAIN
- GB GRADE BREAK
- ME MATCH EXISTING
- PC POINT OF CURVATURE
- POC POINT ON CURVE
- PT POINT OF TANGENCY
- RE RIM ELEVATION
- RBC ROADWAY BASE COURSE
- SW SIDEWALK
- TD TRENCH DRAIN
- TDE TIMBER DECK ELEVATION

NOTES:

1. TABLE ELEVATIONS AT MATCH POINTS ARE SHOWN FOR REFERENCE PURPOSES ONLY, MATCHING EXISTING SURFACES SHALL TAKE PRECEDENCE, NOTIFY ENGINEER PRIOR TO GRADING OF ANY SUBSTANTIAL DISCREPANCIES (± 0.02').
2. ELEVATIONS PROVIDED THIS SHEET FOR POINTS ADJACENT TO CURB INLETS DO NOT REFLECT LOCAL CURB DEPRESSIONS AS REQUIRED IAW CBJ STD 310. SEE STORM DRAIN PLAN.

REVISIONS

REV.	DATE	DESCRIPTION	DWN.	CKD.	APP.

PND ENGINEERS, INC.
9360 Glacier Highway Ste 100
Juneau, Alaska 99801
Phone: 907-586-2093
Fax: 907-586-2099
www.pndengineers.com

DESIGN: CRS CHECKED: CRS
DRAWN: PJD APPROVED: CRS
SCALE: SCALE IN FEET 0 10 20 FT.

STATE OF ALASKA 49TH Charles R. Somerville CE-8845 REGISTERED PROFESSIONAL ENGINEER
DATE: 5/23/2019

DOWNTOWN WATERFRONT IMPROVEMENTS PHASE I
CBJ CONTRACT NO. DH19-014

SHEET TITLE: **POINT LAYOUT TABLES**

PND PROJECT NO.: 182045 C.A.N. NO.: AECC250

C1.03

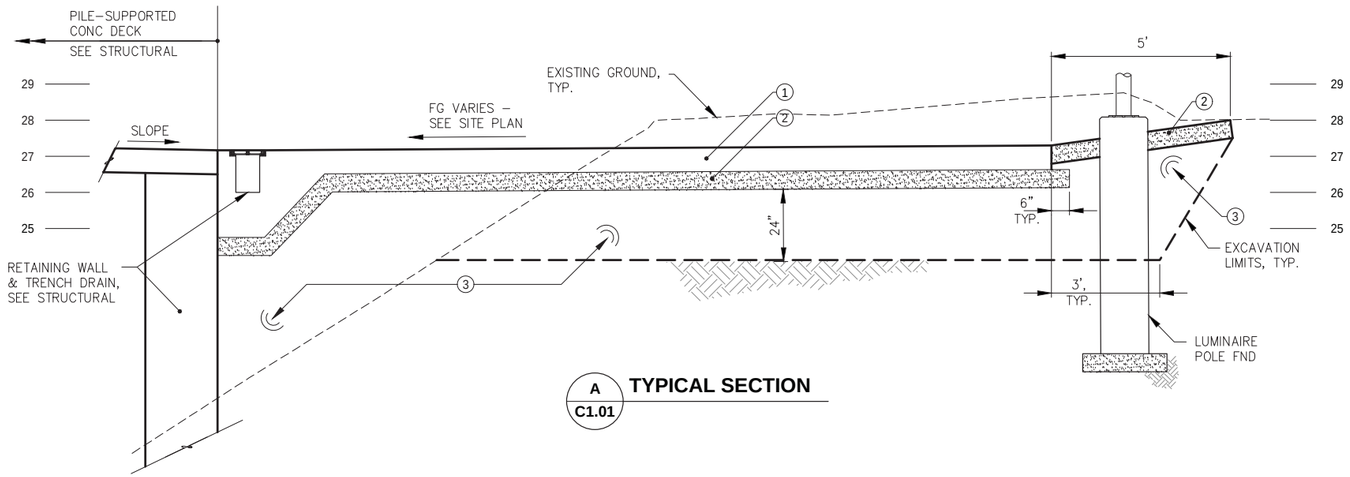

A C1.01 TYPICAL SECTION

MATERIAL SCHEDULE	
SYMBOL	MATERIAL DESCRIPTION
①	8"t CONCRETE PAVING w/ NO.7 BARS @ 12" O.C. EACH WAY
②	6"t LAYER ROADWAY BASE COURSE, OR DEPTH AS SHOWN
③	CLASS A SHOT ROCK BORROW, THICKNESS AS SHOWN
④	4"t CONCRETE PAVING w/ NO.4 BARS @ 12" O.C. EACH WAY
⑤	VERTICAL CURB PER DTL; ELEVATION VARIES, SEE SITE PLAN
⑥	STANDARD CURB & GUTTER PER DOT/PF STD. DTL I.20.20
⑦	DEPRESSED CURB & GUTTER PER DOT/PF STD. DTL I.20.20

NOTES:
1. SEE SITE PLAN FOR PROJECT LIMITS
2. SEE POINT LAYOUT FOR FINAL GRADES
3. REMOVE AND DISPOSE OF UNSUITABLE EXCAVATED MATERIAL INCLUDING ORGANICS AND OTHER WASTE WITHIN FILL PRISM & AS DIRECTED BY ENGINEER.
4. SEE SITE PLAN FOR UTILITIES & STORM DRAINS.
5. PROTECT ALL CONCRETE EDGES FROM DAMAGE DUE TO CONSTRUCTION EQUIPMENT.

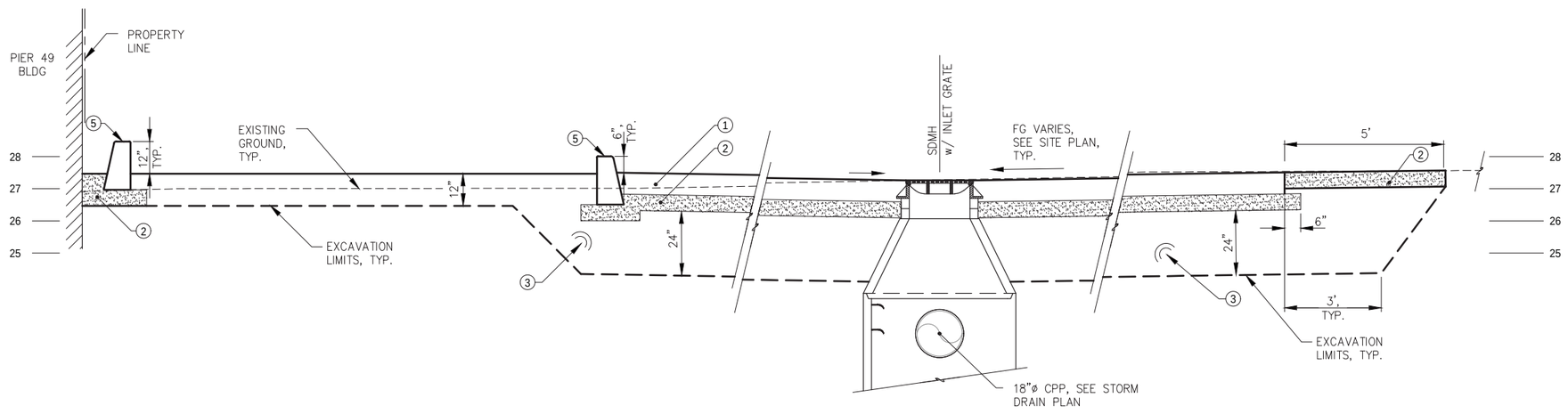

B C1.01 TYPICAL SECTION

DIAL BEFORE YOU DIG!
586-1333

UNDERGROUND POWER, TELEPHONE, T.V., COMMUNICATIONS, WATER AND SEWER LINES ARE IN THE AREA. UTILITIES SHOWN HERE DO NOT SUBSTITUTE FOR FIELD LOCATES.

CITY & BOROUGH OF JUNEAU – DOCKS & HARBORS

REVISIONS

REV.	DATE	DESCRIPTION	DWN.	CKD.	APP.

PND ENGINEERS, INC.
9360 Glacier Highway Ste 100
Juneau, Alaska 99801
Phone: 907-586-2093
Fax: 907-586-2099
www.pndengineers.com

DESIGN: CRS CHECKED: CRS
DRAWN: PJD APPROVED: CRS
SCALE: NTS
DATE: 5/23/2019

STATE OF ALASKA – 49TH – Charles R. Somerville – CE-8845 – REGISTERED PROFESSIONAL ENGINEER

DOWNTOWN WATERFRONT IMPROVEMENTS PHASE I
CBJ CONTRACT NO. DH19-014

SHEET TITLE: **TYPICAL SITE SECTIONS**

PND PROJECT NO.: 182045 C.A.N. NO.: AECC250

C1.04

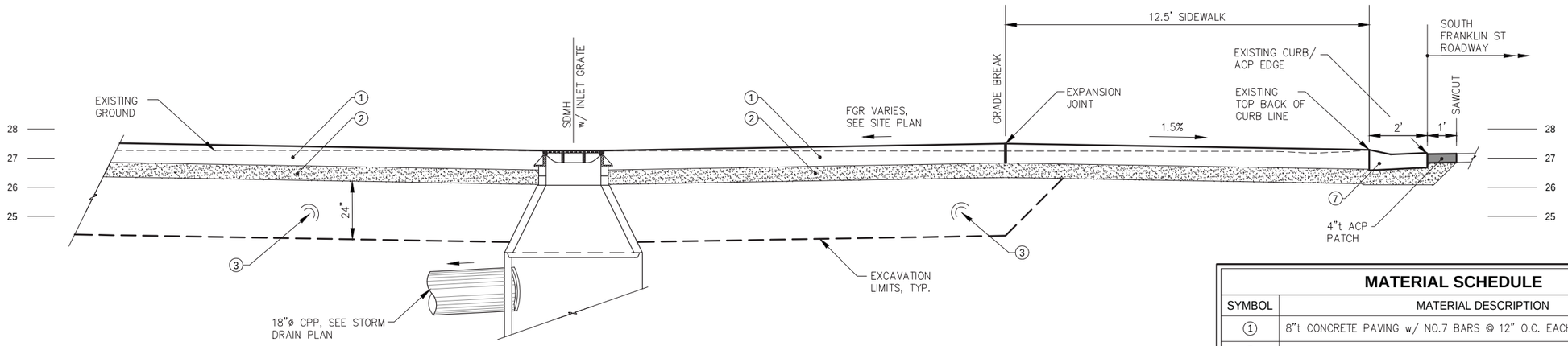

C1.01 **TYPICAL SECTION**

DIAL BEFORE YOU DIG!
586-1333

UNDERGROUND POWER, TELEPHONE, T.V., COMMUNICATIONS, WATER AND SEWER LINES ARE IN THE AREA. UTILITIES SHOWN HERE DO NOT SUBSTITUTE FOR FIELD LOCATES.

MATERIAL SCHEDULE

SYMBOL	MATERIAL DESCRIPTION
①	8"t CONCRETE PAVING w/ NO.7 BARS @ 12" O.C. EACH WAY
②	6"t LAYER ROADWAY BASE COURSE, OR DEPTH AS SHOWN
③	CLASS A SHOT ROCK BORROW, THICKNESS AS SHOWN
④	4"t CONCRETE PAVING w/ NO.4 BARS @ 12" O.C. EACH WAY
⑤	VERTICAL CURB PER DTL; ELEVATION VARIES, SEE SITE PLAN
⑥	STANDARD CURB & GUTTER PER DOT/PF STD. DTL I.20.20
⑦	DEPRESSED CURB & GUTTER PER DOT/PF STD. DTL I.20.20

NOTES:
1. SEE SITE PLAN FOR PROJECT LIMITS
2. SEE POINT LAYOUT FOR FINAL GRADES
3. REMOVE AND DISPOSE OF UNSUITABLE EXCAVATED MATERIAL INCLUDING ORGANICS AND OTHER WASTE WITHIN FILL PRISM & AS DIRECTED BY ENGINEER.
4. SEE SITE PLAN FOR UTILITIES & STORM DRAINS.
5. PROTECT ALL CONCRETE EDGES FROM DAMAGE DUE TO CONSTRUCTION EQUIPMENT.

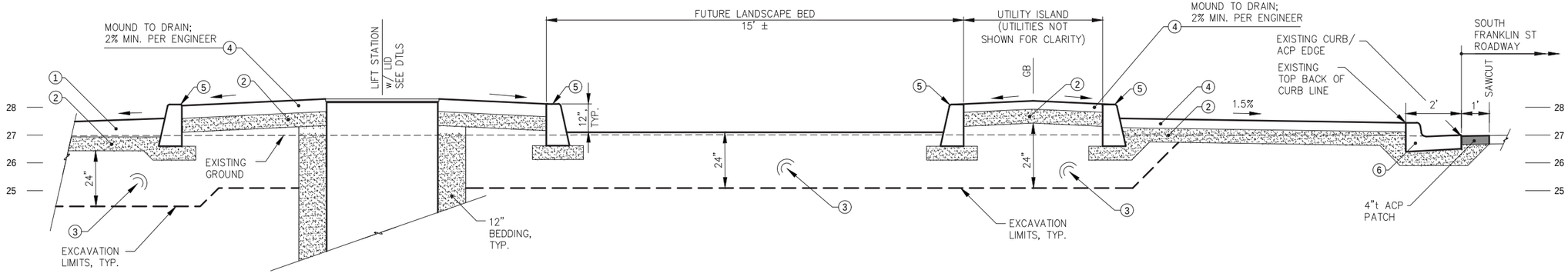

D C1.01 **TYPICAL SECTION**

REVISIONS

REV.	DATE	DESCRIPTION	DWN.	CKD.	APP.

PND ENGINEERS, INC.
9360 Glacier Highway Ste 100
Juneau, Alaska 99801
Phone: 907-586-2093
Fax: 907-586-2099
www.pndengineers.com

DESIGN: CRS CHECKED: CRS
DRAWN: PJD APPROVED: CRS
SCALE: AS SHOWN
DATE: 5/23/2019

STATE OF ALASKA 49TH Charles R. Somerville CE-8845 REGISTERED PROFESSIONAL ENGINEER

DOWNTOWN WATERFRONT IMPROVEMENTS PHASE I
CBJ CONTRACT NO. DH19-014

SHEET TITLE: **TYPICAL SITE SECTIONS**

PND PROJECT NO.: 182045 C.A.N. NO.: AECC250

C1.05

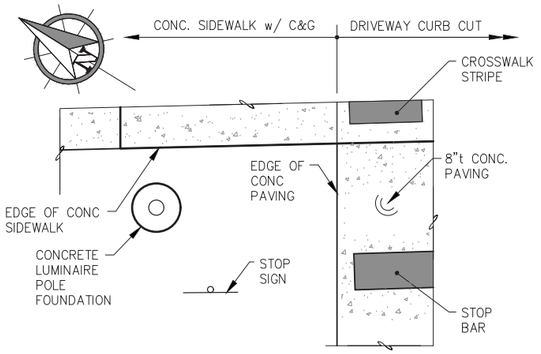

LUMINAIRE POLE PLAN AT ENTRANCE

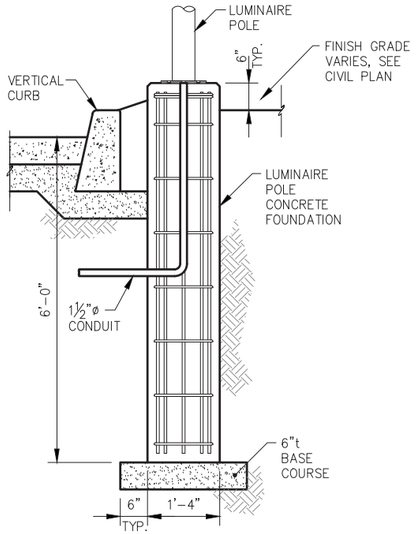

TYPICAL LUMINAIRE POLE PEDESTAL SECTION TYPE 6

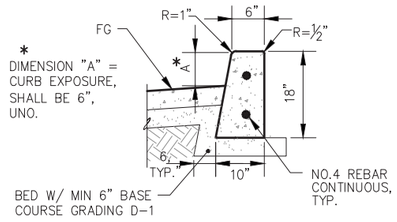

VERTICAL CURB DETAIL

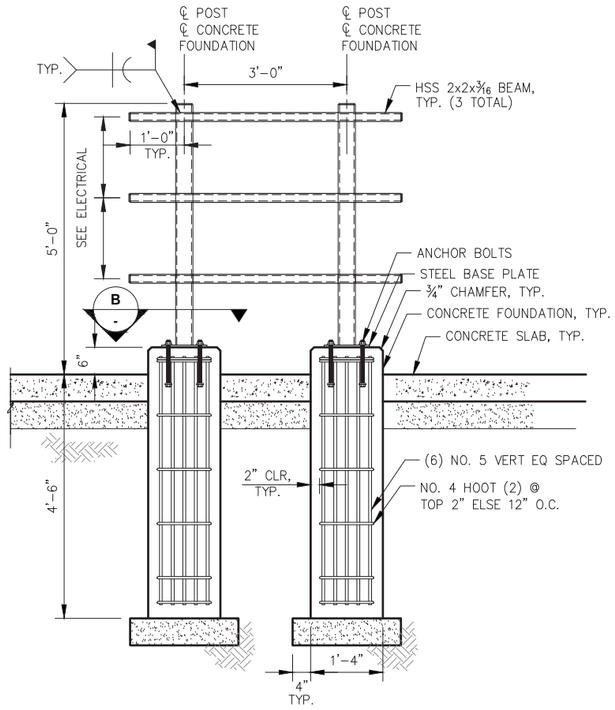

STEEL RACK FOUNDATION DETAILS

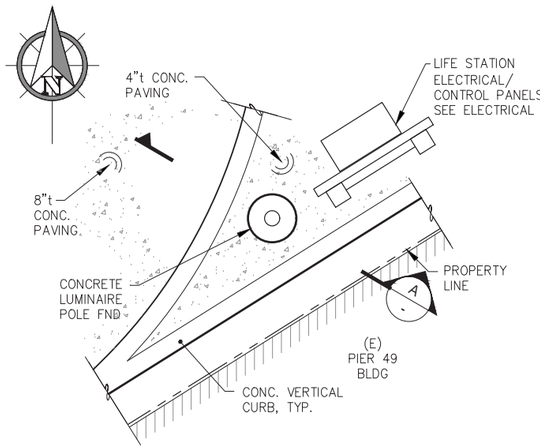

LUMINAIRE POLE PLAN AT PLANTER

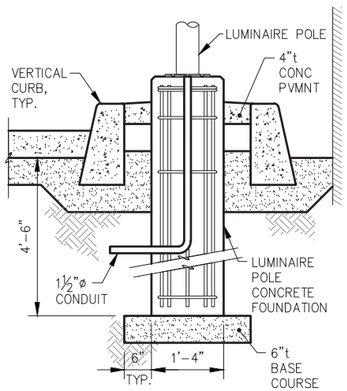

A LUMINAIRE PEDESTAL DETAIL TYPE 7

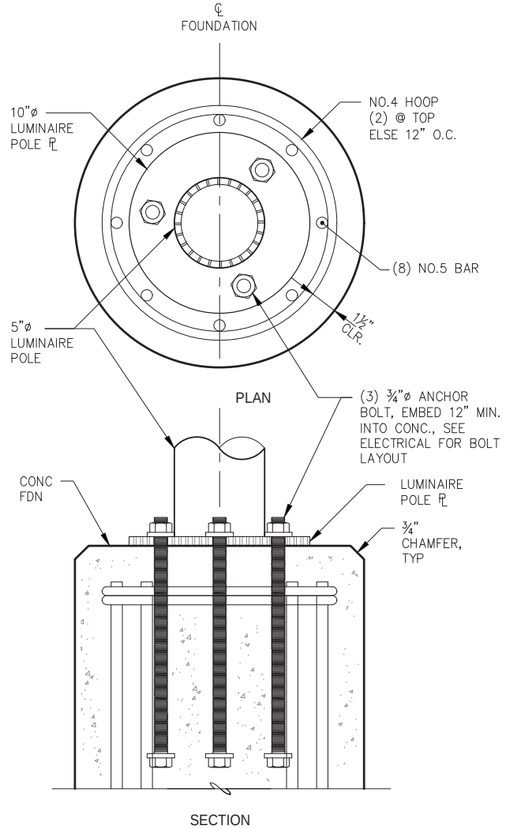

TYPICAL LUMINAIRE POLE FOUNDATION DETAILS

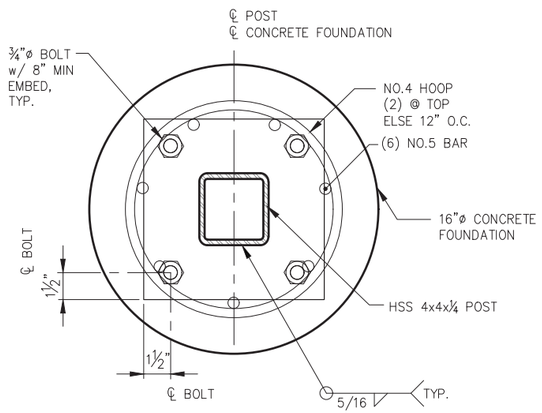

B - LUMINAIRE FOUNDATION DETAIL

NOTES:

1. SEE CIVIL SITE SECTIONS FOR DTLS NOT CALLED OUT.
2. SEE SITE GRADING PLAN FOR ELEVATIONS.
3. FOR LUMINAIRE PEDESTALS, HANDHOLDS AT EACH FOUNDATION BASE, SEE ELECTRICAL.
4. SEE LUMINAIRE FOUNDATION LAYOUT TABLE FOR COORDINATE LOCATIONS AND SIGNAGE AND STRIPING PLAN FOR SIGN COORDINATE LOCATION.

CITY & BOROUGH OF JUNEAU DOCKS & HARBORS

REVISIONS

REV.	DATE	DESCRIPTION	DWN.	CKD.	APP.

PND ENGINEERS, INC.
9360 Glacier Highway Ste 100
Juneau, Alaska 99801
Phone: 907-586-2093
Fax: 907-586-2099
www.pndengineers.com

DESIGN: CRS CHECKED: CRS
DRAWN: PJD APPROVED: CRS
SCALE: AS SHOWN
DATE: 5/23/2019

STATE OF ALASKA 49TH — Charles R. Somerville CE-8845 — REGISTERED PROFESSIONAL ENGINEER

DOWNTOWN WATERFRONT IMPROVEMENTS PHASE I
CBJ CONTRACT NO. DH19-014

SHEET TITLE: **CIVIL DETAILS**

PND PROJECT NO.: 182045 C.A.N. NO.: AECC250

C1.06

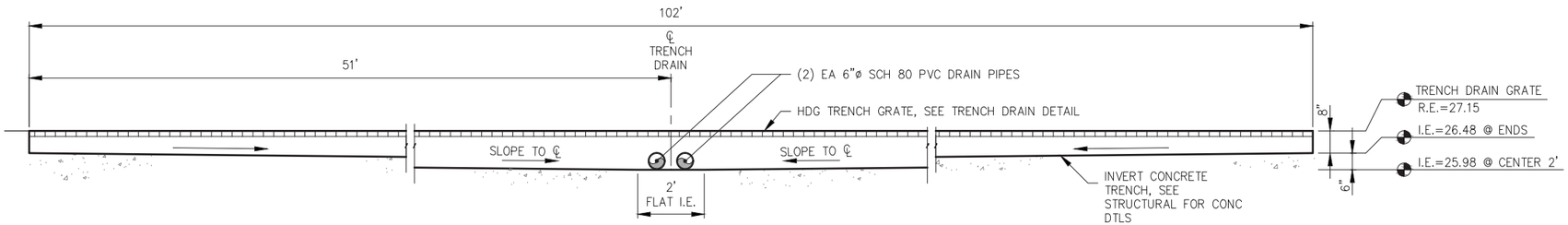

A **TRENCH DRAIN PROFILE**
NTS

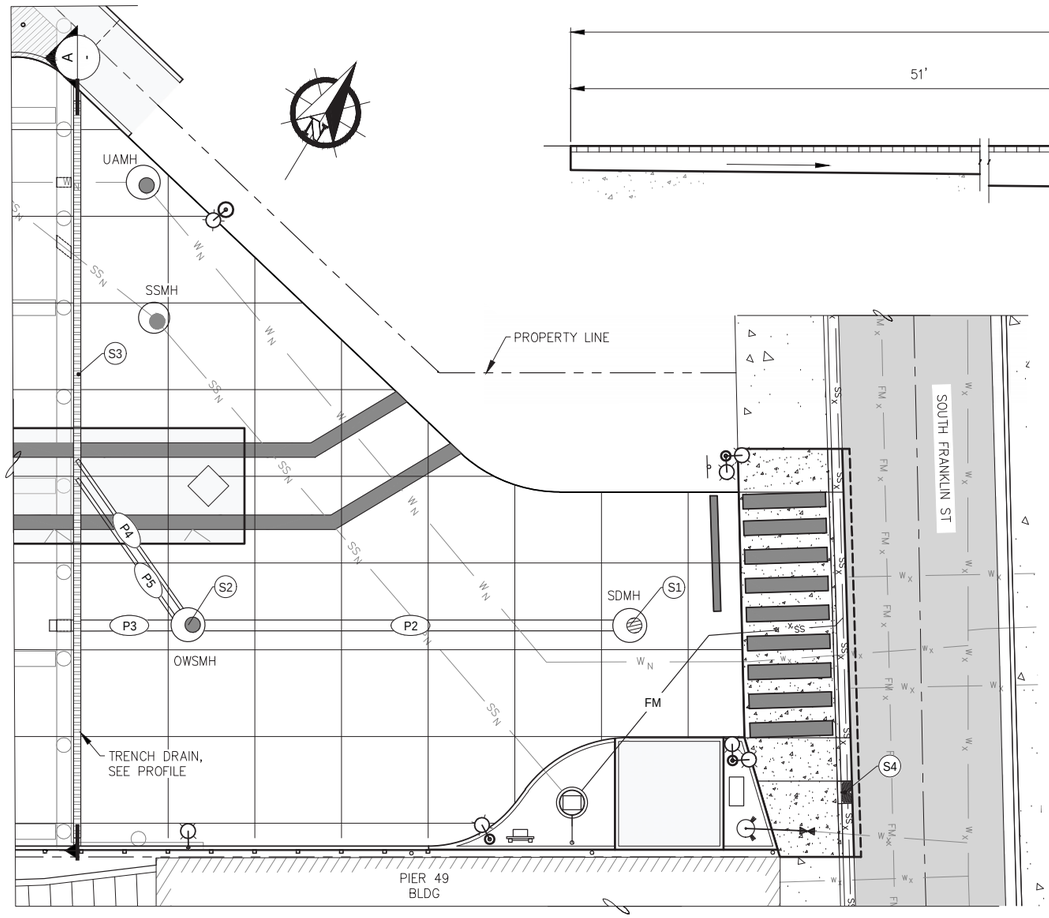

A **STORM DRAIN PARTIAL PLAN**
-

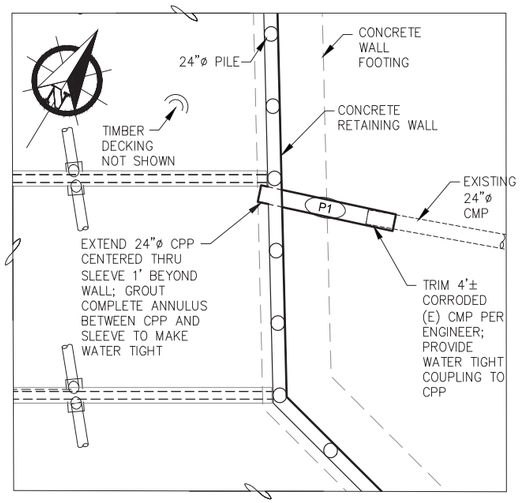

B **STORM DRAIN PARTIAL PLAN**
-

STORM DRAIN STRUCTURES

STRUCTURE DESIGNATION	NORTHING	EASTING	R.E. (FT)	DESCRIPTION
S1	2361658.50	2544399.45	27.24	CENTER SDMH TYPE I w/ TOP GRATE
S2	2361626.09	2544347.60	27.32	CENTER OWS SDMH TYPE I w/ SOLID LID
S3	SEE SITE PLAN C1.01		27.15	102 LF TD
S4	2361654.76	2544436.92	26.80 (FIELD VERIFY)	CENTER IB & CIFG PER DOT&PF STD DTLS D-26.04 & D-23.01

CIFG = CURB INLET FRAME & GRATE
IB = TYPE A INLET BOX
OWS = OIL WATER SEPARATOR
RE = RIM ELEVATION
SDMH = STORM DRAIN MANHOLE
TD = TRENCH DRAIN

STORM DRAIN PIPING

PIPE DESIGNATION	NOMINAL Ø	LENGTH (LF)	FROM	I.E. (FT)	TO	IE
P1	24" CPP	20'	EXIST.	15.41	DAY LITE	14.80
P2	18" CPP	62'	S1	21.75	S2	20.50
P3	18" CPP	20'	S2	20.40	DAY LITE	20.00
P4	6" PVC	28'	TD	25.98	S2	24.68
P5	6" PVC	26'	TD	25.98	S2	24.68

CPP = CORRUGATED POLYETHYLENE PIPE, TYPE S

REVISIONS

REV.	DATE	DESCRIPTION	DWN.	CKD.	APP.

PND ENGINEERS, INC.
9360 Glacier Highway Ste 100
Juneau, Alaska 99801
Phone: 907-586-2093
Fax: 907-586-2099
www.pndengineers.com

DESIGN: CRS CHECKED: CRS
DRAWN: PJD APPROVED: CRS
SCALE: SCALE IN FEET 0 10 20 FT.
DATE: 5/23/2019

STATE OF ALASKA 49TH Charles R. Somerville CE-8845 REGISTERED PROFESSIONAL ENGINEER

DOWNTOWN WATERFRONT IMPROVEMENTS PHASE I
CBJ CONTRACT NO. DH19-014

SHEET TITLE: **STORM DRAIN PLAN**

PND PROJECT NO.: 182045 C.A.N. NO.: AECC250

C1.07

SEWER SERVICE LAYOUT POINTS

POINT	NORTHING	EASTING	I.E. (FT)	DESCRIPTION
S1	2361664.17	2544207.06	–	SEWER SERVICE SLAB PENETRATION, CONNECT TO S3
S2	2361677.02	2544227.54	–	SEWER SERVICE SLAB PENETRATION, CONNECT TO S3
S3	2361664.11	2544221.23	21.44	SEWER SERVICE SLAB PENETRATION w/ HDPE TEE DROP OUT
S4	2361669.25	2544229.42	21.34	ELBOW
S5	2361659.58	2544321.04	–	CENTER UTILITY ACCESS MANHOLE TYPE I w/ SOLID LID
S6	2361633.47	2544405.70	19.13	CENTER E-ONE SEWER LIFT STATION; GRAVITY SEWER I.E. IN
S7	2361663.16	2544409.42	19.56	2" HDPE ELBOW
S8	2361665.90	2544413.12	M.E.	FIELD LOCATE & CTE 6"ø DIP SEWER SERVICE IAW CBJ STD DTL 216
S9	2361660.78	2544213.87	–	FLOOR DRAIN, SEE DTL
S10	2361669.30	2544227.44	–	FLOOR DRAIN, SEE DTL

SEWER SERVICE LAYOUT POINTS (CON'T.)

POINT	NORTHING	EASTING	I.E. (FT)	DESCRIPTION
S11	2361664.16	2544209.40	–	3"x3" TEE
S12	2361664.14	2544214.28	–	3"x2" TEE
S13	2361670.44	2544224.33	–	3"x2" TEE
S14	2361674.69	2544226.40	–	3"x3" TEE

WATER SYSTEM LAYOUT POINTS

POINT	NORTHING	EASTING	I.E. (FT)	DESCRIPTION
W1	2361672.67	2544213.50	21.44	WATER SERVICE SLAB PENETRATION
W2	2361664.51	2544293.56	20.71	ELBOW
W3	2361674.68	2544309.79	20.54	CENTER UTILITY ACCESS MANHOLE TYPE I w/ SOLID LID
W4	2361648.05	2544392.35	19.15	ELBOW
W5	2361663.09	2544416.16	M.E.	FIELD LOCATE & CTE 6"ø DIP WATER SERVICE w/ SERIES 3800 RESTRAINED JOINT MEGA-COUPLING
W6	2361643.26	2544428.00	–	CENTER FIRE HYDRANT – IAW CBJ STD DTL 403

NOTE:
1. PIPE SWAY STRUTS FOR WATER AND SEWER PIPES NOT SHOWN FOR CLARITY. SEE SHT C1.12 FOR PIPE SWAY STRUT DETAILS.

NOTES:
1. MAINTAIN 5 FEET MIN. BURY ON WATER LINE.
2. MAINTAIN 10 FEET LATERAL SEPARATION DISTANCE BETWEEN WATER & SEWER LINES.
3. MAINTAIN 18 INCH VERTICAL SEPARATION DISTANCE BETWEEN WATER, SEWER SERVICE AND STORM WATER LINES.
4. NOT ALL FITTINGS & APPURTENANCES ARE SHOWN; CONTRACTOR SHALL USE INDUSTRY STANDARD PRACTICES TO ACHIEVE CONNECTIONS NOT DETAILED IN ACCORDANCE WITH THE SPECIFICATIONS CONSISTENT WITH APPLICABLE LOCAL, STATE & FEDERAL REGULATIONS PER ENGINEER DIRECTION (INCIDENTAL).
5. 1 ¼"ø AND 2"ø WASTEWATER PIPE SHALL BE HYDROSTATIC PRESSURE TESTED TO FORCE MAIN REQUIREMENTS, SEE SPECIFICATIONS)
6. SUPPORT ALL BELOW DECK PIPING WITH HANGERS AND BRACES PER DETAILS.
7. ADJUSTMENTS TO FINAL LOCATIONS PER ENGINEER APPROVAL TO FIT FIELD CONDITIONS ENCOUNTERED.
8. WHERE WATER & SEWER LINES ARE PARALLEL, ADJUST WATERLINE INVERT ELEVATION TO MATCH SEWER.

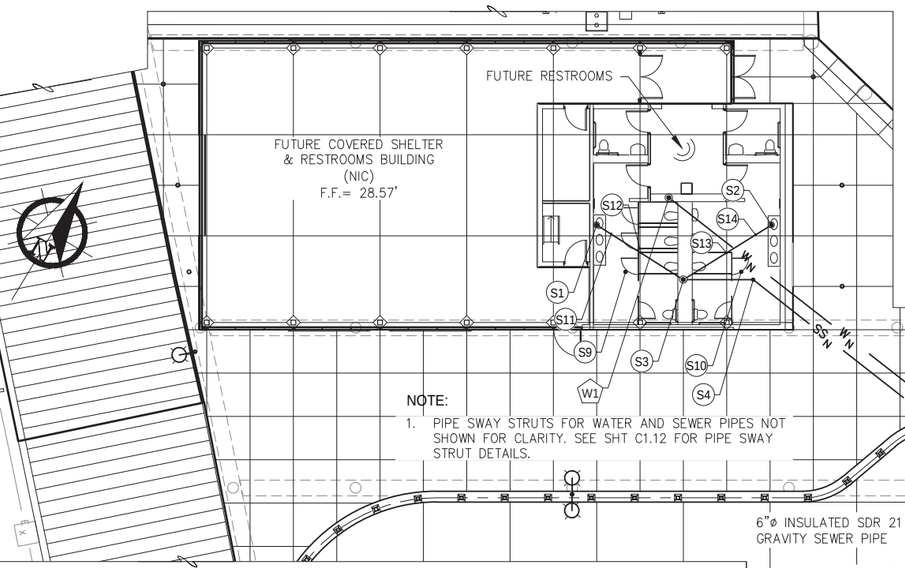

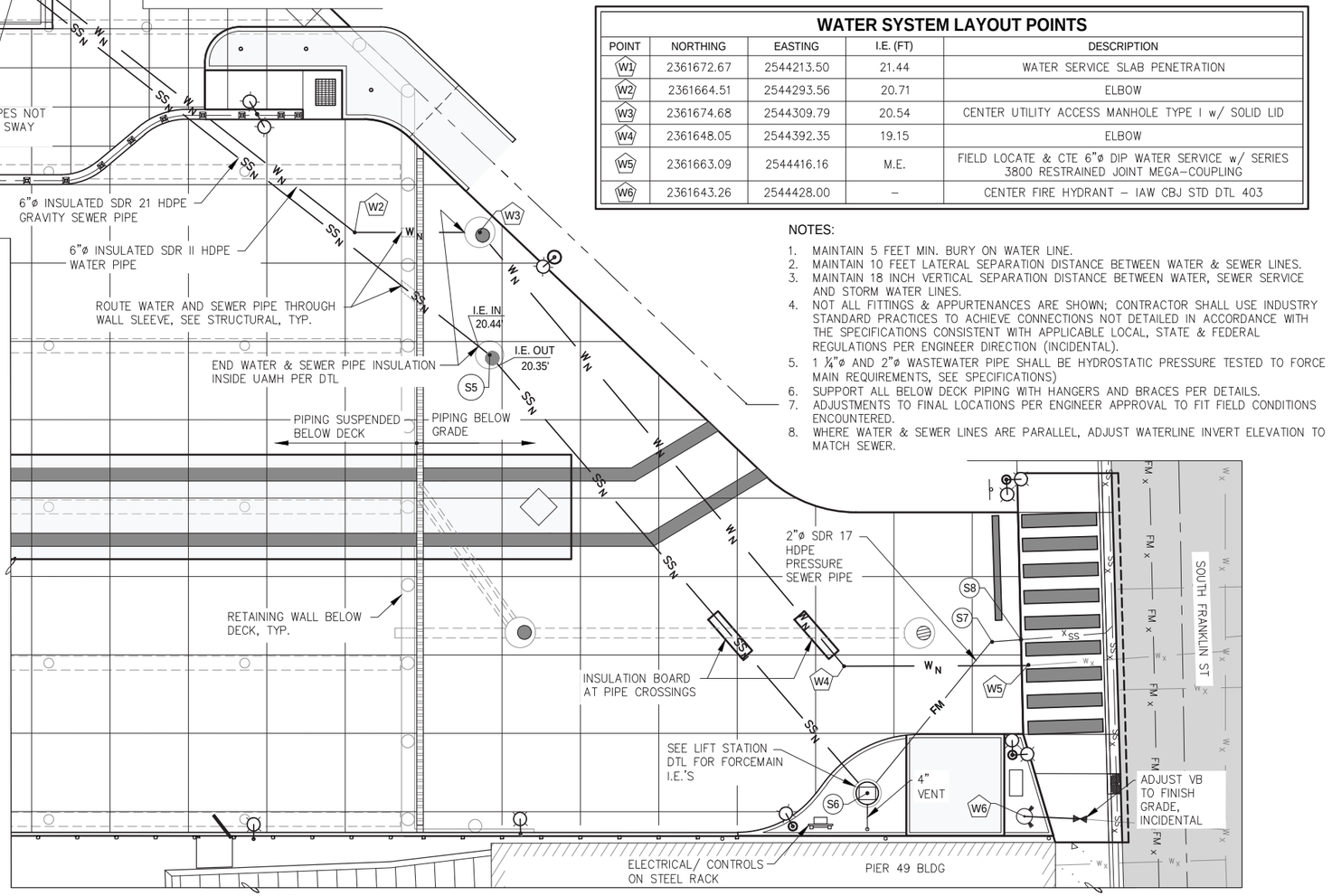

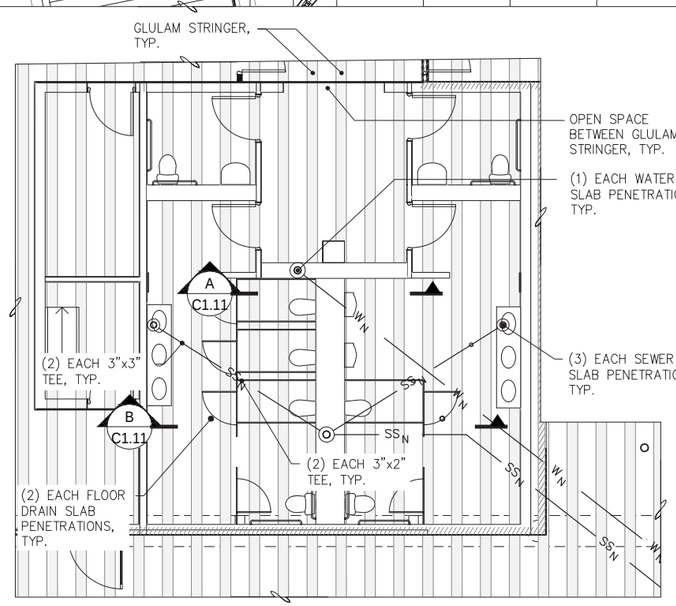

A FUTURE RESTROOM FLOOR PLAN SLAB PENETRATIONS

SCALE IN FEET
0 5 10 FT.

CITY & BOROUGH OF JUNEAU DOCKS & HARBORS

REVISIONS

REV.	DATE	DESCRIPTION	DWN.	CKD.	APP.

PND ENGINEERS, INC.
9360 Glacier Highway Ste 100
Juneau, Alaska 99801
Phone: 907-586-2093
Fax: 907-586-2099
www.pndengineers.com

DESIGN: BCL CHECKED: CRS
DRAWN: PJD APPROVED: CRS
SCALE: SCALE IN FEET 0 10 20 FT.

STATE OF ALASKA 49TH
Charles R. Somerville CE-8845
REGISTERED PROFESSIONAL ENGINEER
DATE: 5/23/2019

DOWNTOWN WATERFRONT IMPROVEMENTS PHASE I
CBJ CONTRACT NO. DH19-014

SHEET TITLE: **WATER & SEWER UTILITY PLAN**

PND PROJECT NO.: 182045 C.A.N. NO.: AECC250

C1.08

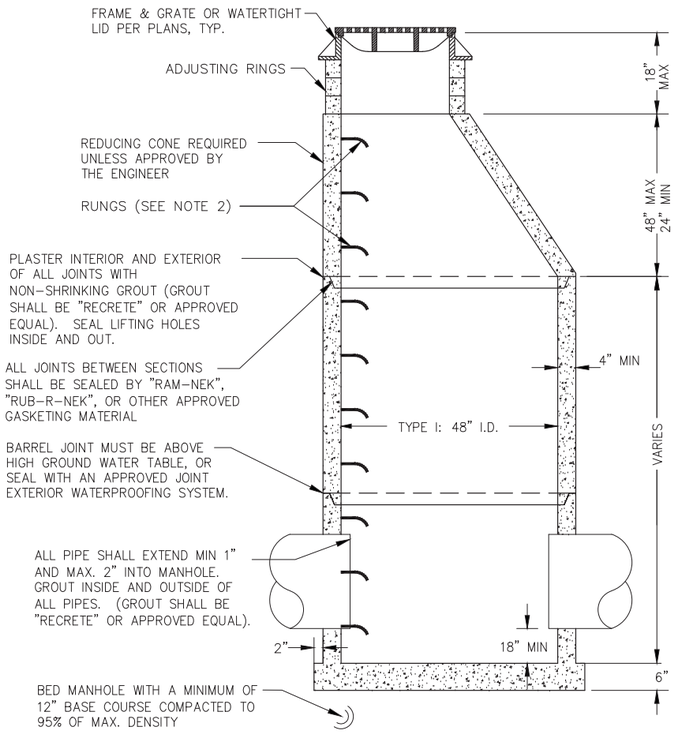

1 TYPE I STORM DRAIN MANHOLE

NOTES:
1. RUNGS PLACED 12" O.C. ON UNOBSTRUCTED SIDE OF MANHOLE. LAST RUNG 18" MAX FROM BOTTOM OF MANHOLE, AND TOP RUNG 6" MAX FROM TOP OF CONE. IF UNOBSTRUCTED SIDE NOT AVAILABLE, LAST RUNG PLACED 6" OVER SMALLEST PIPE.
2. REFER TO A.S.T.M. C-478 FOR DESIGN REQUIREMENTS AND C-478-69 FOR MINIMUM STEEL FOR BARREL. BARREL SHALL BE IMBEDDED IN BASE SO THAT FIRST BARREL SECTION IS CONNECTED WITH BASE.
3. BLOCKOUTS MUST BE FORMED.
4. CONFORM ALL OTHER ASPECTS TO CBJ STD DTL 303.

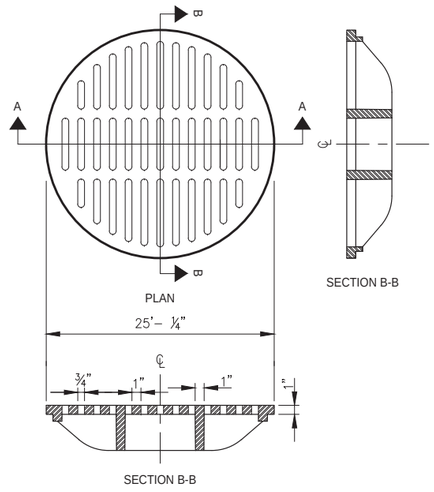

2 TOP INTAKE GRATE

SLOTTED COVER IFCO 705-G, OR EQUAL

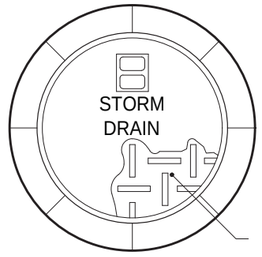

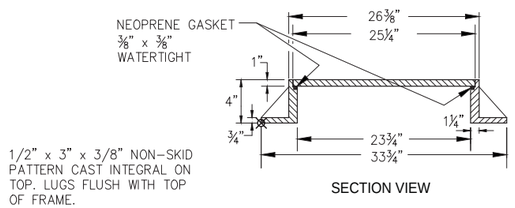

1/2" x 3" x 3/8" NON-SKID PATTERN CAST INTEGRAL ON TOP. LUGS FLUSH WITH TOP OF FRAME.

3 STORM DRAIN MANHOLE
WATERTIGHT SOLID LID AND FRAME

NOTES:
1. FRAME MUST BE MACHINED TO FIT WATERTIGHT NEOPRENE GASKET.
2. COVER SHALL BE WATER TIGHT WITH NO HOLES, SHALL HAVE THE WORD "STORM" CAST IN AND SHALL BE PROVIDED WITH AN INTEGRAL POCKET LIFT HANDLE.
3. FRAME AND COVER SHALL BE DUCTILE IRON AND SHALL CONFORM TO AASHTO M-306.
4. CONFORM ALL OTHER ASPECTS TO CBJ STD DTL 206A.

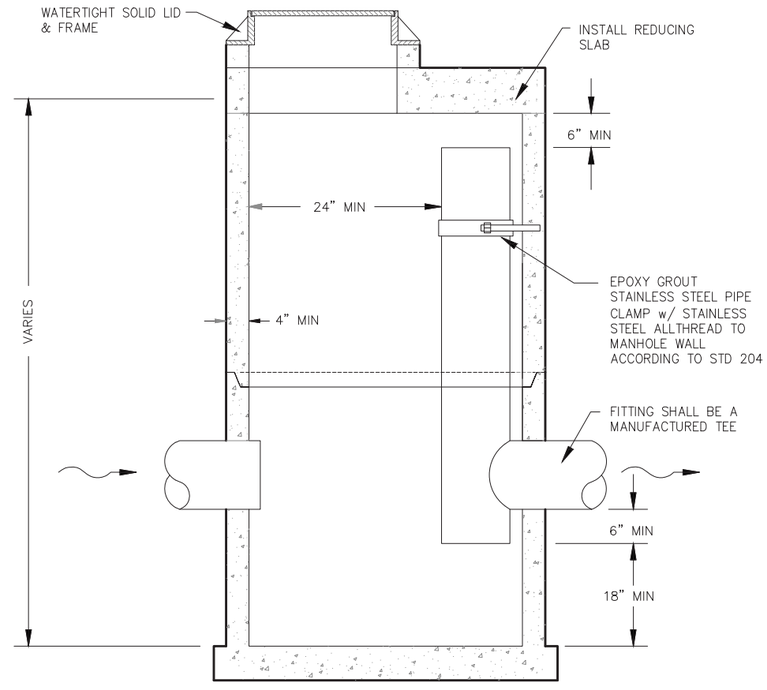

4 OIL-WATER SEPARATOR STORM DRAIN MANHOLE

NOTES:
1. ACCESS TO THE MANHOLE SHALL BE CONSTRUCTED TO ALLOW FOR MAINTENANCE AND PUMPING.
2. MANHOLE SHALL CONFORM IN ALL OTHER ASPECTS TO A TYPE I STORM DRAIN MANHOLE AS SHOWN IN CBJ STD DTL 303.
3. INLET, OUTLET, AND RISER PIPE SHALL BE THE SAME DIMENSION.

CITY & BOROUGH OF JUNEAU — DOCKS & HARBORS

REVISIONS

REV.	DATE	DESCRIPTION	DWN.	CKD.	APP.

PND ENGINEERS, INC.
9360 Glacier Highway Ste 100
Juneau, Alaska 99801
Phone: 907-586-2093
Fax: 907-586-2099
www.pndengineers.com

DESIGN: BCL CHECKED: CRS
DRAWN: PJD APPROVED: CRS
SCALE: SCALE IN FEET 0 10 20 FT.

STATE OF ALASKA 49TH — Charles R. Somerville CE-8845 REGISTERED PROFESSIONAL ENGINEER
DATE: 5/23/2019

DOWNTOWN WATERFRONT IMPROVEMENTS PHASE I
CBJ CONTRACT NO. DH19-014

SHEET TITLE: **STORM DRAIN DETAILS**

PND PROJECT NO.: 182045 C.A.N. NO.: AECC250

C1.09

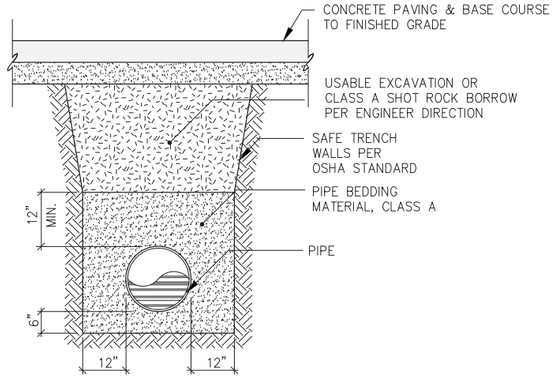

TYPICAL PIPE BEDDING SECTION

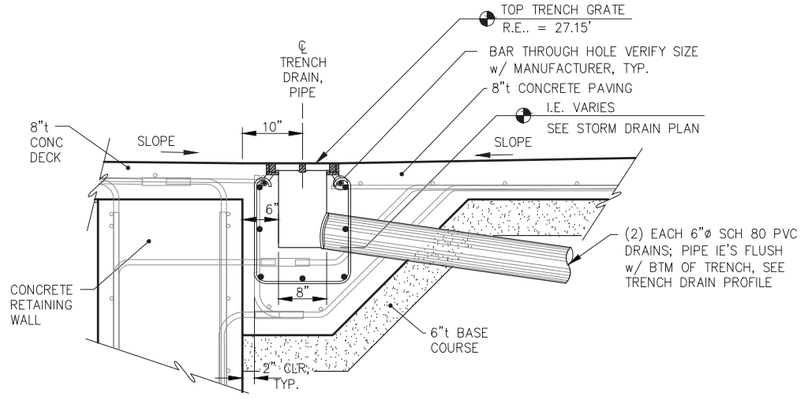

TRENCH DRAIN DETAIL

NOTES:

1. TRENCH GRATE SHALL BE EJIW V–7382–20 ADA BOLTED ASSEMBLY, OR APPROVED EQUAL, HOT–DIPPED GALVANIZED.
2. CAST 6" SCH. 80 PVC DRAIN PIPE INTO CONCRETE.

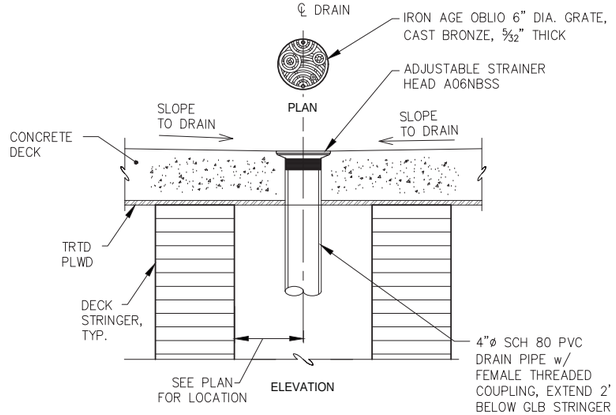

6 INCH DECK DRAIN DETAIL

NOTES:

1. OFFSET & EXTEND PVC DRAIN LINE w/ FABRICATED ELBOWS AS REQUIRED TO AVOID DRAINING ONTO STRUCTURE BELOW.
2. PLANTER DRAINS SIMILAR.

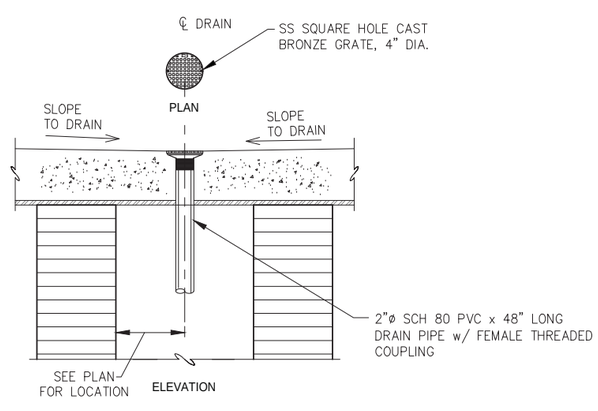

4 INCH FLOOR DRAIN DETAIL

NOTE:

DETAILS NOT SHOWN SIMILAR TO 6" DECK DRAIN.

REVISIONS

REV.	DATE	DESCRIPTION	DWN.	CKD.	APP.

PND ENGINEERS, INC.
9360 Glacier Highway Ste 100
Juneau, Alaska 99801
Phone: 907-586-2093
Fax: 907-586-2099
www.pndengineers.com

DESIGN: CRS CHECKED: CRS
DRAWN: PJD APPROVED: CRS
SCALE: SCALE IN FEET 0 10 20 FT.
DATE: 5/23/2019

STATE OF ALASKA 49TH Charles R. Somerville CE-8845 REGISTERED PROFESSIONAL ENGINEER

DOWNTOWN WATERFRONT IMPROVEMENTS PHASE I
CBJ CONTRACT NO. DH19-014

SHEET TITLE: **STORM DRAIN DETAILS**

PND PROJECT NO.: 182045 C.A.N. NO.: AECC250

C1.10

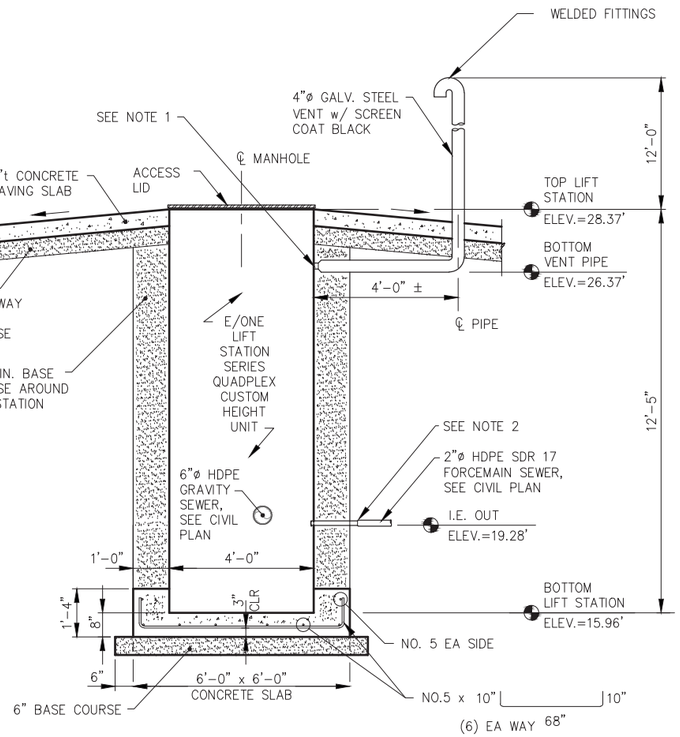

1 SEWER LIFT STATION DETAIL

NOTES:

1. ADAPT 4–INCH VENT PIPE TO 2–INCH GROMET AT WET WELL; SUBMIT CONNECTION DETAIL FOR ENGINEER APPROVAL.
2. ADAPT 1½"ø FEMALE NPT TO 2"ø HDPE PRESSURE DISCHARGE LINE OUTSIDE WET WELL; PROVIDE SUBMITTAL FOR ENGINEER APPROVAL.
3. SEE SPEC SECTION 09900 FOR VENT COATING REQUIREMENTS.

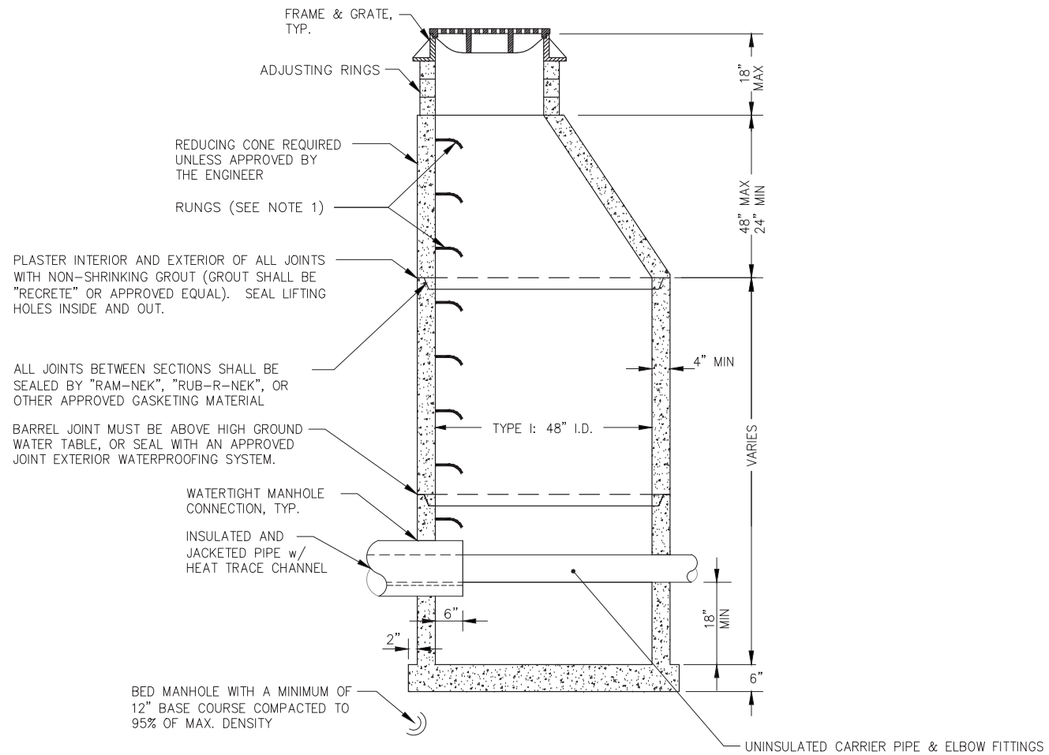

2 UTILITY ACCESS MANHOLE TYPE I

NOTES:

1. RUNGS PLACED 12" O.C. ON UNOBSTRUCTED SIDE OF MANHOLE. LAST RUNG 18" MAX FROM BOTTOM OF MANHOLE, AND TOP RUNG 6" MAX FROM TOP OF CONE. IF UNOBSTRUCTED SIDE NOT AVAILABLE, LAST RUNG PLACED 6" OVER SMALLEST PIPE.
2. REFER TO A.S.T.M. C–478 FOR DESIGN REQUIREMENTS AND C–478–69 FOR MINIMUM STEEL FOR BARREL. BARREL SHALL BE IMBEDDED IN BASE SO THAT FIRST BARREL SECTION IS CONNECTED WITH BASE.
3. BLOCKOUTS MUST BE FORMED.
4. WATERTIGHT CONNECTION DETAIL PER CBJ STD DTL 209.
5. HEAT TRACE INSULATION SHALL BE TERMINATED AND SEALED WATERTIGHT PRIOR TO THE PIPE FITTINGS WITHIN THE MANHOLE; PROVIDE OPEN ACCESS TO HEAT TRACE CHANNEL.

CITY & BOROUGH OF JUNEAU DOCKS & HARBORS

REVISIONS

REV.	DATE	DESCRIPTION	DWN.	CKD.	APP.

PND ENGINEERS, INC.
9360 Glacier Highway Ste 100
Juneau, Alaska 99801
Phone: 907-586-2093
Fax: 907-586-2099
www.pndengineers.com

DESIGN: BCL CHECKED: CRS
DRAWN: PJD APPROVED: CRS
SCALE: SCALE IN FEET 0 10 20 FT.

STATE OF ALASKA 49TH Charles R. Somerville CE-8845 REGISTERED PROFESSIONAL ENGINEER
DATE: 5/23/2019

DOWNTOWN WATERFRONT IMPROVEMENTS PHASE I
CBJ CONTRACT NO. DH19-014

SHEET TITLE: **WATER & SEWER DETAILS**

PND PROJECT NO.: 182045 C.A.N. NO.: AECC250

C1.11

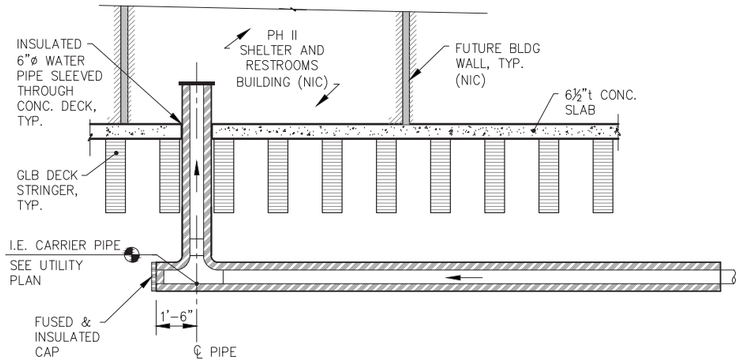

A C1.08 **WATER T-CONNECTION DETAIL**

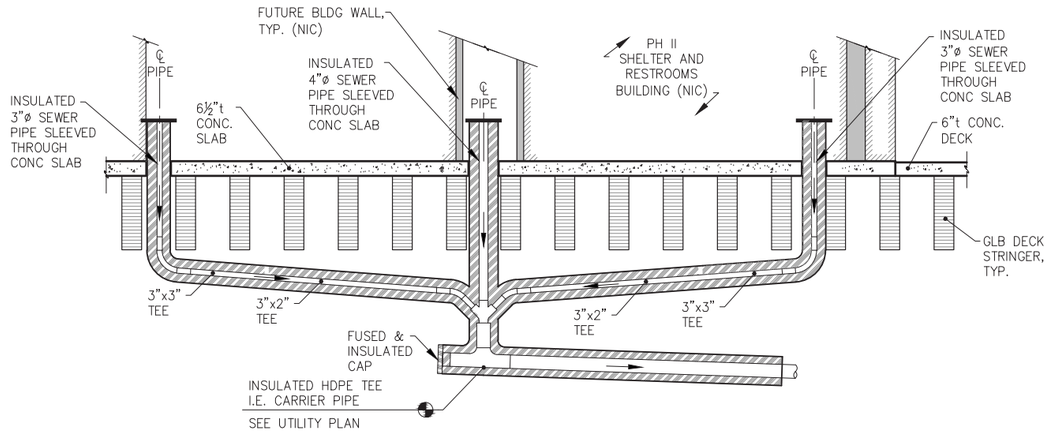

B C1.08 **SEWER WYE - CONNECTOR DETAIL**

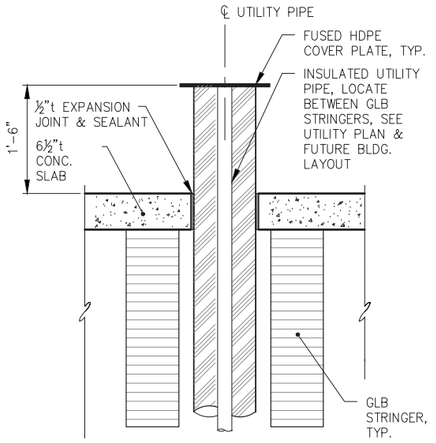

1 **TYPICAL UTILITY SERVICE SLAB PENETRATION DETAIL**

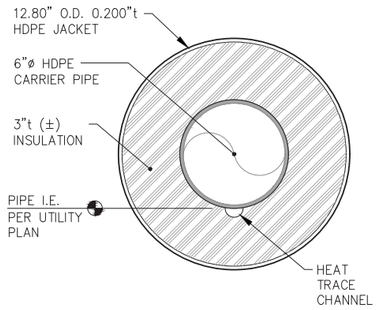

6"Ø INSULATED PIPE DETAIL

NOTE:
2"ø AND 4"ø SEWER PIPES ARE SIMILAR BUT DIFFERENT DIMENSIONS

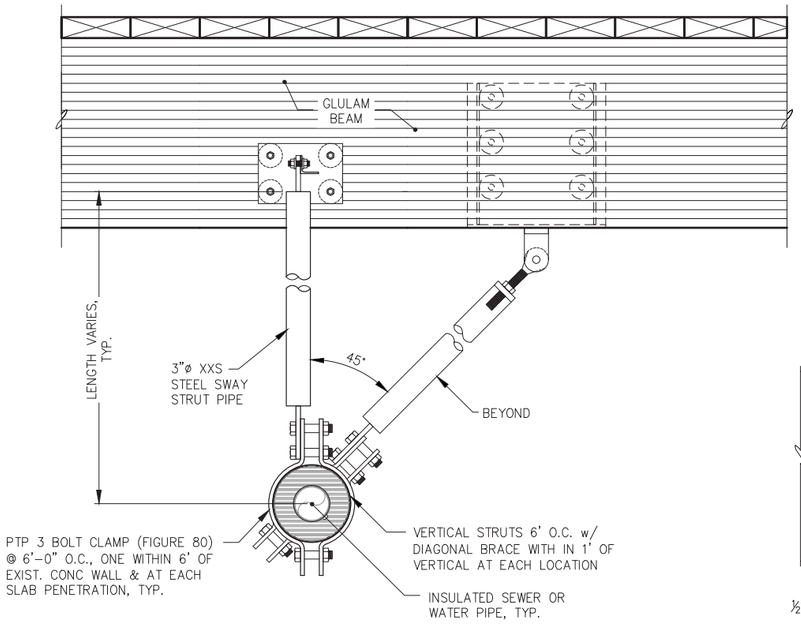

2 **PIPE SWAY STRUT DETAIL**

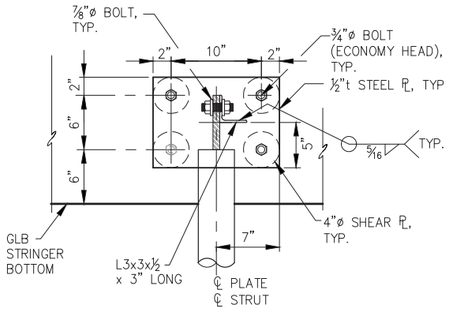

STRUT CONNECTION PLATE DETAIL

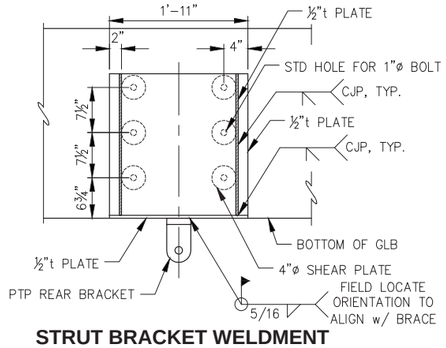

STRUT BRACKET WELDMENT ELEVATION

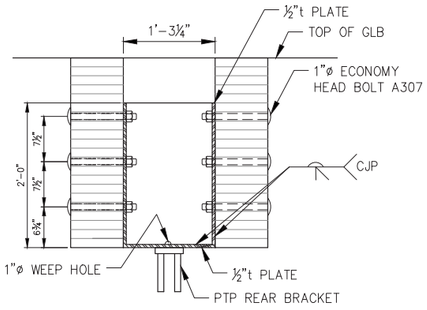

STRUT BRACKET WELDMENT SECTION

REVISIONS

REV.	DATE	DESCRIPTION	DWN.	CKD.	APP.

P N D ENGINEERS, INC.
9360 Glacier Highway Ste 100
Juneau, Alaska 99801
Phone: 907-586-2093
Fax: 907-586-2099
www.pndengineers.com

DESIGN: BCL CHECKED: CRS
DRAWN: PJD APPROVED: CRS
SCALE: AS SHOWN

STATE OF ALASKA 49TH Charles R. Somerville CE-8845 REGISTERED PROFESSIONAL ENGINEER
DATE: 5/23/2019

DOWNTOWN WATERFRONT IMPROVEMENTS PHASE I
CBJ CONTRACT NO. DH19-014

SHEET TITLE: **WATER & SEWER DETAILS**

PND PROJECT NO.: 182045 C.A.N. NO.: AECC250

C1.12

STRIPE POINT LAYOUT

POINT NO.	DESCRIPTION	NORTHING	EASTING
1	STRAIGHT AHEAD ARROW, TIP. SEE DETAILS	2361586.53	2544213.87
2	END 4" WHITE STRIPE	2361602.99	2544236.39
3	END 4" WHITE STRIPE	2361617.68	2544242.85
4	STRAIGHT AHEAD ARROW, TIP. SEE DETAILS	2361636.36	2544253.77
5	BEGIN 4" WHITE STRIPE	2361615.63	2544283.51
6	END 8" WHITE STRIPE	2361669.03	2544290.78
7	END 4" WHITE STRIPE	2361658.45	2544307.83
8	BEGIN 4" WHITE STRIPE	2361646.20	2544332.24
9	STRAIGHT AHEAD ARROW, TIP. SEE DETAILS	2361664.78	2544334.36
10	CORNER 24" WHITE STRIPE	2361656.46	2544348.60

STRIPE POINT LAYOUT (CON'T.)

POINT NO.	DESCRIPTION	NORTHING	EASTING
11	BEGIN 24" WHITE STRIPE	2361668.74	2544354.82
12	BEGIN 24" WHITE STRIPE	2361666.27	2544367.02
13	STRAIGHT AHEAD ARROW, TIP. SEE DETAILS	2361672.60	2544403.50
14	BEGIN 12" WHITE STOP BAR	2361666.60	2544408.65
15	BEGIN 24" WHITE STRIPE	2361680.50	2544404.14
16	BEGIN 24" WHITE STRIPE	2361655.60	2544420.87
17	STRAIGHT AHEAD ARROW, TIP. SEE DETAILS	2361652.87	2544404.24
18	CORNER 24" WHITE STRIPE	2361648.07	2544357.80
19	BEGIN 4" WHITE STRIPE	2361636.34	2544366.04
20	END 4" WHITE STRIPE	2361637.61	2544341.07

STRIPE POINT LAYOUT (CON'T.)

POINT NO.	DESCRIPTION	NORTHING	EASTING
21	BEGIN 4" WHITE STRIPE	2361625.36	2544365.48
22	STRAIGHT AHEAD ARROW, TIP. SEE DETAILS	2361616.90	2544370.79
23	STRAIGHT AHEAD ARROW, TIP. SEE DETAILS	2361566.66	2544290.76
24	BEGIN 4" WHITE STRIPE	2361564.20	2544268.01
25	END 4" WHITE STRIPE	2361576.45	2544243.60
26	END 4" WHITE STRIPE	2361565.47	2544243.04
27	STRAIGHT AHEAD ARROW, TIP. SEE DETAILS	2361561.51	2544236.53
28	END 24" WHITE STRIPE	2361562.06	2544220.71
29	END 24" WHITE STRIPE	2361571.28	2544212.82
30	STOP SIGN, SEE SIGNING SCHEDULE	2361682.94	2544397.05

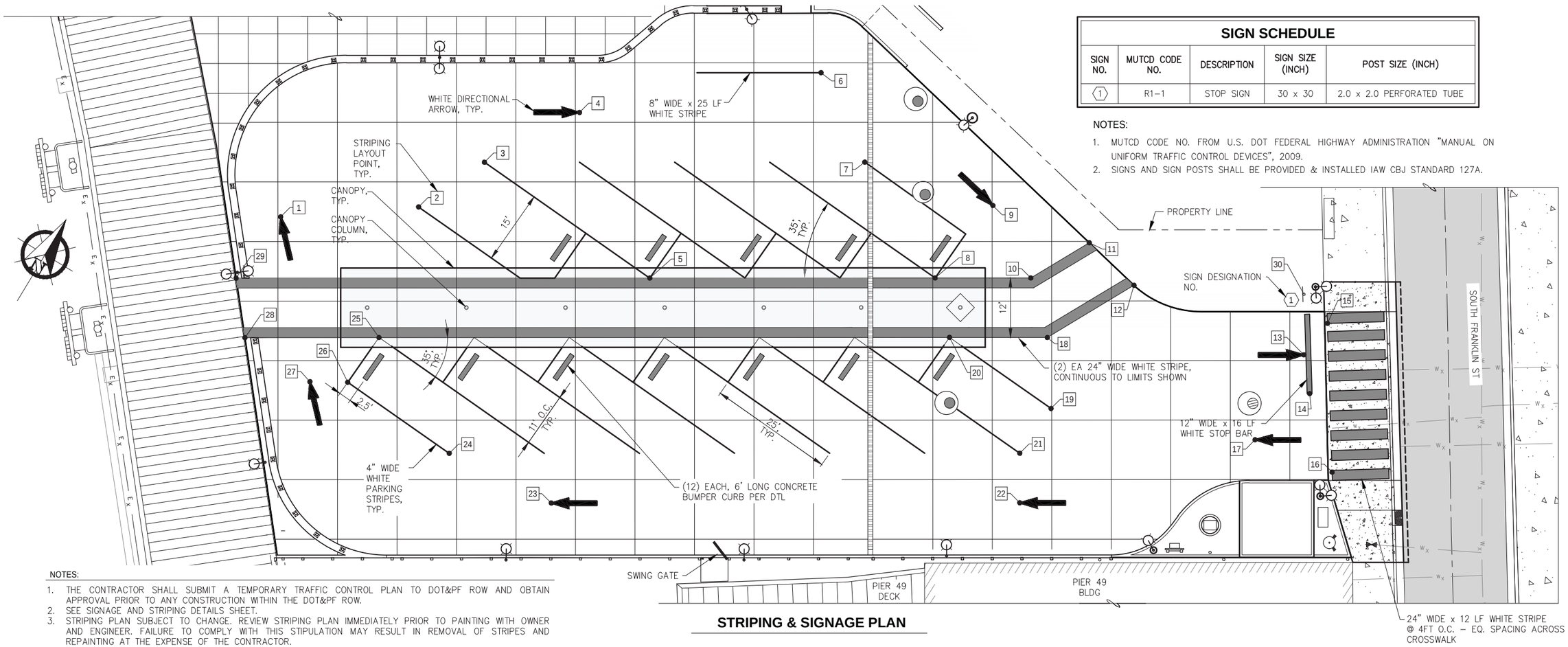

SIGN SCHEDULE

SIGN NO.	MUTCD CODE NO.	DESCRIPTION	SIGN SIZE (INCH)	POST SIZE (INCH)
1	R1-1	STOP SIGN	30 x 30	2.0 x 2.0 PERFORATED TUBE

NOTES:

1. MUTCD CODE NO. FROM U.S. DOT FEDERAL HIGHWAY ADMINISTRATION "MANUAL ON UNIFORM TRAFFIC CONTROL DEVICES", 2009.
2. SIGNS AND SIGN POSTS SHALL BE PROVIDED & INSTALLED IAW CBJ STANDARD 127A.

NOTES:

1. THE CONTRACTOR SHALL SUBMIT A TEMPORARY TRAFFIC CONTROL PLAN TO DOT&PF ROW AND OBTAIN APPROVAL PRIOR TO ANY CONSTRUCTION WITHIN THE DOT&PF ROW.
2. SEE SIGNAGE AND STRIPING DETAILS SHEET.
3. STRIPING PLAN SUBJECT TO CHANGE. REVIEW STRIPING PLAN IMMEDIATELY PRIOR TO PAINTING WITH OWNER AND ENGINEER. FAILURE TO COMPLY WITH THIS STIPULATION MAY RESULT IN REMOVAL OF STRIPES AND REPAINTING AT THE EXPENSE OF THE CONTRACTOR.

STRIPING & SIGNAGE PLAN

REVISIONS

REV.	DATE	DESCRIPTION	DWN.	CKD.	APP.

PND ENGINEERS, INC.
9360 Glacier Highway Ste 100
Juneau, Alaska 99801
Phone: 907-586-2093
Fax: 907-586-2099
www.pndengineers.com

DESIGN: CRS CHECKED: CRS
DRAWN: PJD APPROVED: CRS
SCALE: SCALE IN FEET 0 10 20 FT.
DATE: 5/23/2019

Charles R. Somerville CE-8845 REGISTERED PROFESSIONAL ENGINEER STATE OF ALASKA 49TH

DOWNTOWN WATERFRONT IMPROVEMENTS PHASE I
CBJ CONTRACT NO. DH19-014

SHEET TITLE: **STRIPING & SIGNAGE PLAN**

PND PROJECT NO.: 182045 C.A.N. NO.: AECC250

C1.13

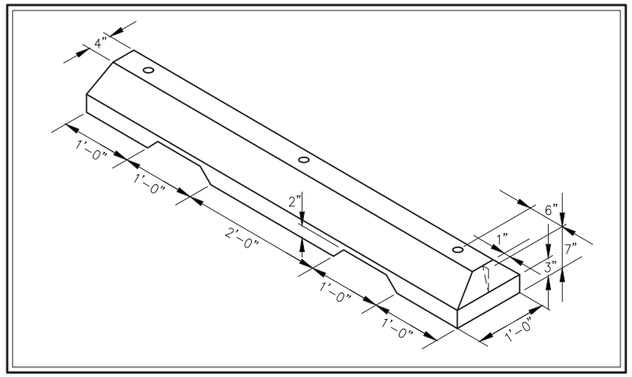

PRECAST CONCRETE BUMPER CURB DETAIL

(QUANTITY: 12 REQ'D.)

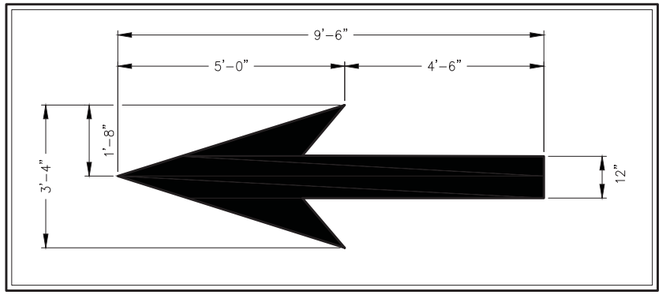

THROUGH LANE-USE ARROW

(QUANTITY: 8 REQ'D.)

NOTE:

ARROWS TO BE LOCATED AT APPROXIMATE LOCATION SHOWN ON SIGNING AND STRIPING PLAN. EXACT LOCATION TO BE DETERMINED IN FIELD AS INSTRUCTED BY ENGINEER.

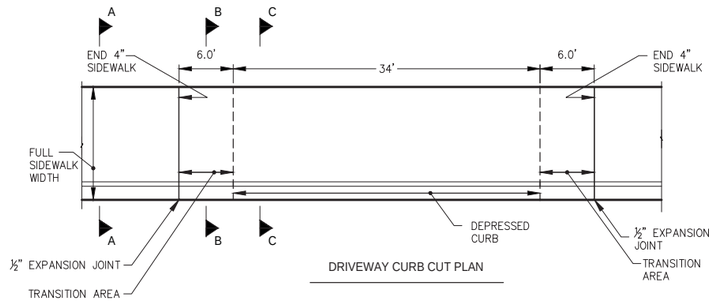

DRIVEWAY CURB CUT PLAN

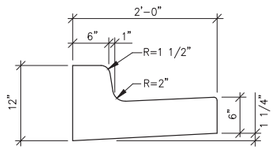

STANDARD CURB & GUTTER

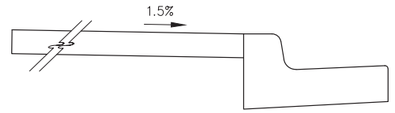

NORMAL SECTION A-A

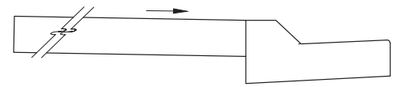

TRANSITION SECTION B-B

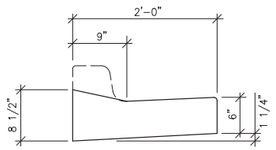

DEPRESSED CURB & GUTTER

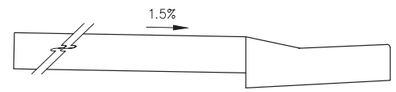

DEPRESSED SECTION C-C

DRIVEWAY CURB CUT, CURB & GUTTER DETAILS

(DOT&PF STD DTL I.20.20)

GENERAL CURB & GUTTER NOTES:

1. THE VERTICAL MATCH POINT FOR ALL CURB AND GUTTER TRANSITIONS SHALL BE THE FLOWLINE.
2. CURB AND GUTTER TRANSITIONS SHALL BE GRADUAL OVER A MIN DISTANCE OF 6 LF PER ENGINEER DIRECTION.
3. ALL STEEL MUST HAVE A MINIMUM OF 2" OF CONCRETE COVER.
4. ALL JOINTS AND SEAMS SHALL BE TOOLED AND EDGED, SEE SERIES 6 FOR CONTROL JOINT DTL.
5. STEEL TROWELING FINISH REQUIRED PRIOR TO BROOM FINISHING OF ALL SURFACES.
6. CONCRETE INTERNATIONAL CORPORATION ASHFORD FORMULA OR APPROVED EQUAL SHALL BE APPLIED AS A CURING COMPOUND. APPLICATION SHALL EXPLICITLY CONFORM TO THE MANUFACTURER'S RECOMMENDATIONS.
7. BED ALL TYPES OF CURB AND GUTTER W/ 6"t. MIN LAYER OF BASE COURSE GRADING D-1, ALL AROUND.
8. SUBBASE MATERIALS SHALL BE PER APPLICABLE FILL SECTION, EXCEPT AS NOTED.
9. CURBS SHALL HAVE POLY-FIBER REINFORCEMENT UNO, SEE SPECIFICATIONS.
10. PROVIDE A COARSE BROOMED FINISH ON RAMP RUNS PERPENDICULAR TO THE RAMP SLOPE.

REVISIONS

REV.	DATE	DESCRIPTION	DWN.	CKD.	APP.

PND ENGINEERS, INC.
9360 Glacier Highway Ste 100
Juneau, Alaska 99801
Phone: 907-586-2093
Fax: 907-586-2099
www.pndengineers.com

DESIGN: CRS CHECKED: CRS
DRAWN: PJD APPROVED: CRS
SCALE: SCALE IN FEET 0 10 20 FT.

STATE OF ALASKA 49TH Charles R. Somerville CE-8845 REGISTERED PROFESSIONAL ENGINEER
DATE: 5/23/2019

DOWNTOWN WATERFRONT IMPROVEMENTS PHASE I
CBJ CONTRACT NO. DH19-014

SHEET TITLE: **STRIPING, BUMPER CURB & DRIVEWAY CURB CUT**

PND PROJECT NO.: 182045 C.A.N. NO.: AECC250

C1.14

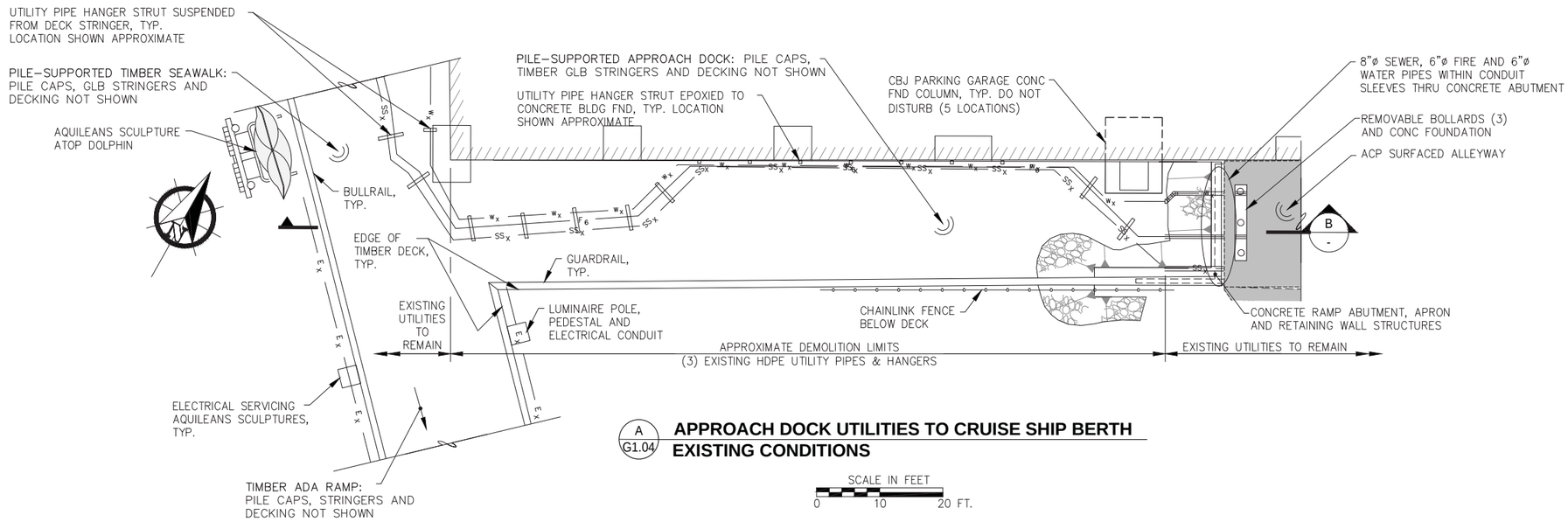

A G1.04 **APPROACH DOCK UTILITIES TO CRUISE SHIP BERTH EXISTING CONDITIONS**

SCALE IN FEET
0 10 20 FT.

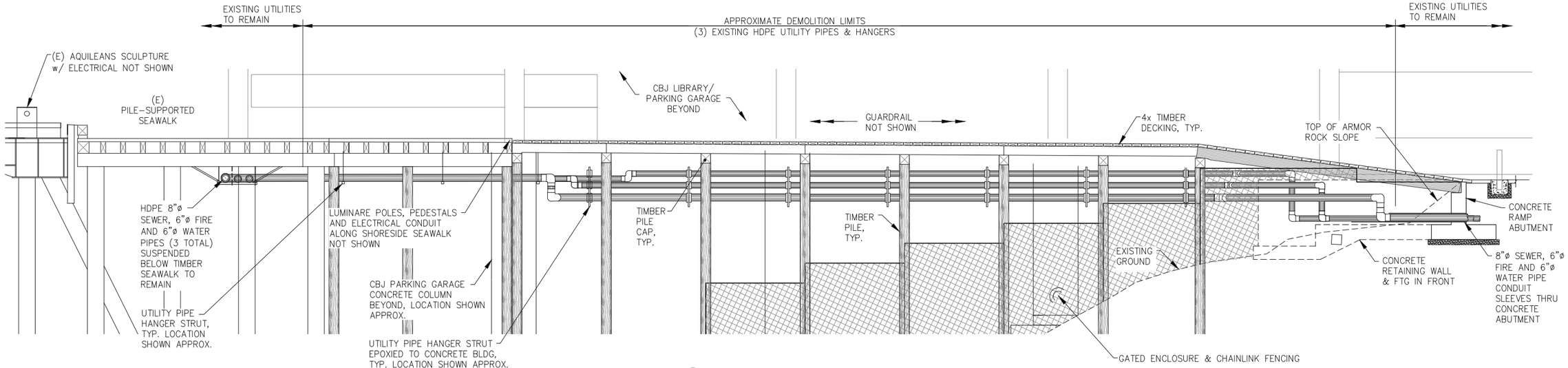

B **APPROACH DOCK EXISTING UTILITIES PROFILE**

SCALE IN FEET
0 5 10 FT.

NOTE:
SEE ALSO DEMOLITION PLANS

REVISIONS

REV.	DATE	DESCRIPTION	DWN.	CKD.	APP.

PND ENGINEERS, INC.
9360 Glacier Highway Ste 100
Juneau, Alaska 99801
Phone: 907-586-2093
Fax: 907-586-2099
www.pndengineers.com

DESIGN: CRS CHECKED: CRS
DRAWN: PJD APPROVED: CRS
SCALE: AS SHOWN
DATE: 5/23/2019

STATE OF ALASKA 49TH — Charles R. Somerville CE-8845 — REGISTERED PROFESSIONAL ENGINEER

DOWNTOWN WATERFRONT IMPROVEMENTS PHASE I
CBJ CONTRACT NO. DH19-014

SHEET TITLE: **APPROACH DOCK UTILITIES EXISTING CONDITIONS**

PND PROJECT NO.: 182045 C.A.N. NO.: AECC250

C1.15

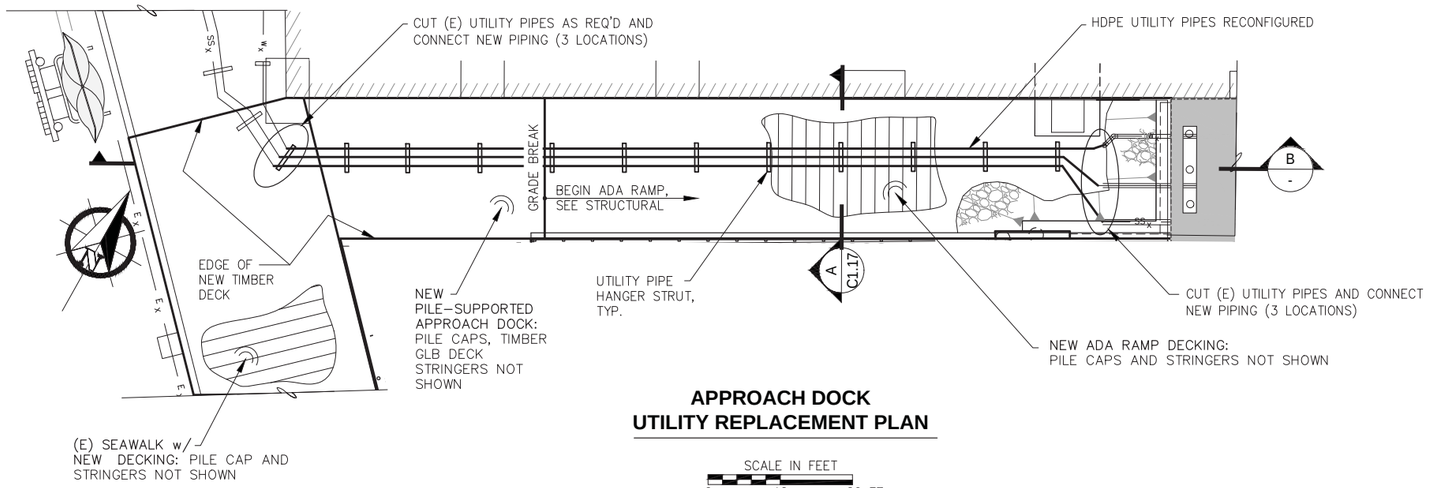

APPROACH DOCK UTILITY REPLACEMENT PLAN

SCALE IN FEET
0 10 20 FT.

UTILITY RELOCATION NOTES:

1. UTILITIES SHOWN APPROXIMATE, FIELD LOCATE AND ADJUST PER ENGINEER APPROVAL.
2. FABRICATE ALL BENDS IN UTILITY PIPES AS REQ'D.
3. EXISTING PIPING AND HANGER EQUIPMENT IN GOOD CONDITION MAY BE SALVAGED AND INCORPORATED INTO THE UTILITY RECONFIGURATION WORK TO THE EXTENT PRACTICABLE.

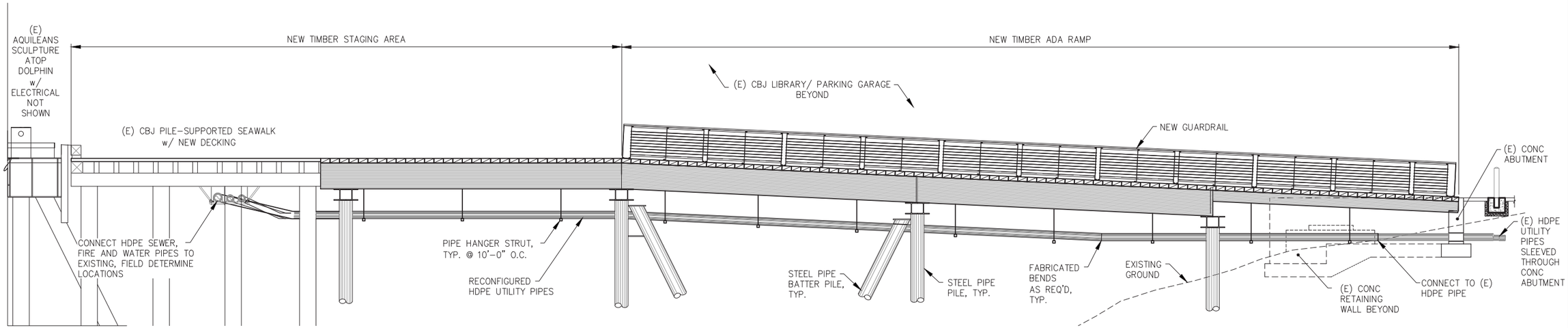

APPROACH DOCK PROFILE w/ REPLACEMENT UTILITY PIPES

B
-

SCALE IN FEET
0 5 10 FT.

REVISIONS

REV.	DATE	DESCRIPTION	DWN.	CKD.	APP.

PND ENGINEERS, INC.
9360 Glacier Highway Ste 100
Juneau, Alaska 99801
Phone: 907-586-2093
Fax: 907-586-2099
www.pndengineers.com

DESIGN: CRS CHECKED: CRS
DRAWN: PJD APPROVED: CRS
SCALE: AS SHOWN
DATE: 5/23/2019

STATE OF ALASKA 49TH Charles R. Somerville CE-8845 REGISTERED PROFESSIONAL ENGINEER

DOWNTOWN WATERFRONT IMPROVEMENTS PHASE I
CBJ CONTRACT NO. DH19-014

SHEET TITLE: **APPROACH DOCK UTILITIES REPLACEMENT PLAN**

C1.16

PND PROJECT NO.: 182045 C.A.N. NO.: AECC250

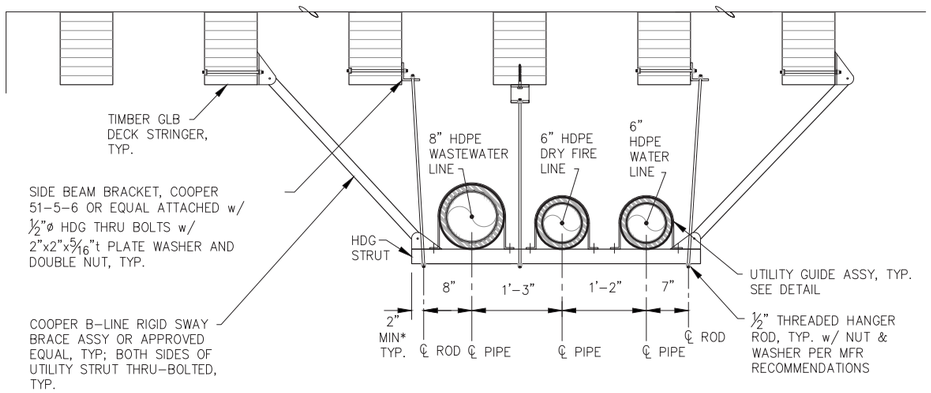

THREE-PIPE HANGER STRUT DETAIL

A / C1.16

HANGER STRUT NOTES:

1. HANGERS SHALL BE INSTALLED ON UTILITY LINE PATH @ 10'–0" OC MAX.
2. HANGERS SHALL BE INSTALLED ADJACENT TO EACH SIDE OF ALL FITTINGS, UNO. MAINTAIN 6" CLR TO FUSED JOINTS.
3. FIELD DRILL HANGER AND SWAY BRACE ATTACHMENT HOLES THROUGH TIMBER STRINGERS.
4. TREAT ALL HOLES AND CUTS IN TIMBER PER AWPA M–4
5. STRUT, ROD & SWAY BRACE LENGTHS SHALL VARY w/ PIPE ROUTE AND LOCATION.
6. ALL HANGER AND SWAY BRACE COMPONENTS SHALL BE HOT DIP GALVANIZED OR 316 SS.
7. ALL HANGERS AND SWAY BRACE COMPONENTS SHALL BE COORDINATED w/ MFR TO ENSURE SEISMIC LOAD CAPABILITY IS MET TO THE LOADS PROVIDED ON S1.01 TO 2013 NFPA STANDARDS. MAX ROD LENGTH SHALL BE 3'–0", UNO.

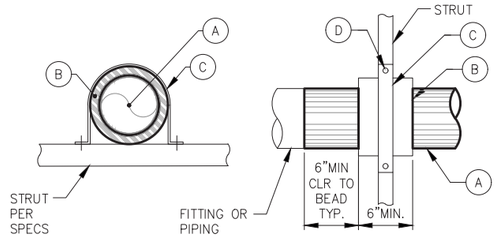

UTILITY GUIDE SUPPORT

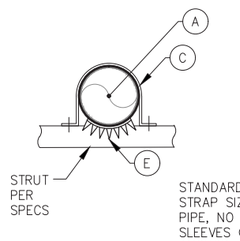

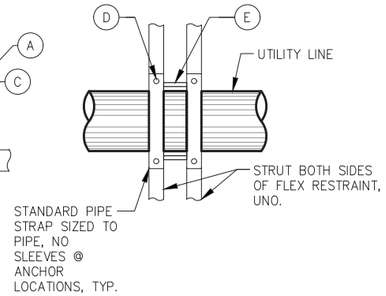

UTILITY ANCHOR SUPPORT

UTILITY SUPPORT DETAILS

NOTES:

1. SLEEVES SHALL BE SLID OVER PIPE PRIOR TO BUTT WELD AS REQUIRED.
2. PIPE STRAPS SHALL BE SIZED FOR PIPE SLEEVES WHERE SLEEVES ARE REQ'D.
3. UTILITY GUIDE SUPPORTS SHALL HAVE 6" MIN CLEARANCE FROM BUTT–WELDED JOINTS.
4. STRUTS SUPPORTING (2) OR MORE PIPES SHALL BE SECURED w/ MIN (3) ½" BOLTS OR EPOXY ANCHORS, UNO.
5. STRUTS SUPPORTING (1) PIPE SHALL BE SECURED w/ MIN (2) ½" BOLTS OR EPOXY ANCHORS, UNO.

SUPPORT COMPONENT TABLE

UTILITY	(A)	(B)	(C)	(D)	(E)
6" WATER OR FIRE	6" HDPE UTILITY LINE	8" SDR 11 HDPE SLEEVE	STANDARD PIPE STRAP	½" 316 SS BOLT & CHANNEL NUT	ELECTROFUSION FLEX RESTRAINT
8" WASTEWATER	8" HDPE UTILITY LINE	10" SDR 13.5 HDPE SLEEVE	STANDARD PIPE STRAP	½" 316 SS BOLT & CHANNEL NUT	ELECTROFUSION FLEX RESTRAINT

CITY & BOROUGH OF JUNEAU DOCKS & HARBORS

REVISIONS

REV.	DATE	DESCRIPTION	DWN.	CKD.	APP.

PND ENGINEERS, INC.
9360 Glacier Highway Ste 100
Juneau, Alaska 99801
Phone: 907-586-2093
Fax: 907-586-2099
www.pndengineers.com

DESIGN: CRS CHECKED: CRS
DRAWN: PJD APPROVED: CRS
SCALE: AS SHOWN
DATE: 5/23/2019

STATE OF ALASKA 49TH Charles R. Somerville CE-8945 REGISTERED PROFESSIONAL ENGINEER

DOWNTOWN WATERFRONT IMPROVEMENTS PHASE I
CBJ CONTRACT NO. DH19-014

SHEET TITLE: **APPROACH DOCK UTILITIES SUPPORT DETAILS**

PND PROJECT NO.: 182045 C.A.N. NO.: AECC250

C1.17

STRUCTURAL GENERAL NOTES

APPLICABLE CODES AND STANDARDS

1. INTERNATIONAL CODE COUNCIL (ICC), "INTERNATIONAL BUILDING CODE (IBC) 2012".
2. AMERICAN ASSOCIATION OF STATE HIGHWAY BRIDGES (AASHTO), "STANDARD SPECIFICATIONS FOR HIGHWAY BRIDGES, SEVENTEENTH EDITION, 2002".
3. AMERICAN SOCIETY FOR TESTING AND MATERIALS (ASTM) STANDARDS, CURRENT EDITION.
4. AMERICAN INSTITUTE OF STEEL CONSTRUCTION (AISC), "MANUAL OF STEEL CONSTRUCTION, FIFTEENTH EDITION".
5. AMERICAN WELDING SOCIETY (AWS), "D1.1 STRUCTURAL WELDING CODE – STEEL, CURRENT EDITION".
6. AMERICAN CONCRETE INSTITUTE (ACI), "ACI MANUAL OF CONCRETE PRACTICE, CURRENT EDITION".
7. AMERICAN CONCRETE INSTITUTE (ACI), "318–14 BUILDING CODE REQUIREMENTS FOR STRUCTURAL CONCRETE AND COMMENTARY".
8. NATIONAL DESIGN SPECIFICATIONS FOR WOOD CONSTRUCTION (NDS), 2012 EDITION.
9. AMERICAN BUREAU OF SHIPPING (ABS), RULES FOR BUILDING AND CLASSING OFFSHORE INSTALLATIONS, 1997.
10. AMERICAN SOCIETY OF CIVIL ENGINEERS (ASCE), MINIMUM DESIGN LOADS AND ASSOCIATED CRITERIA FOR BUILDING AND OTHER STRUCTURES, ASCE 7–16

DESIGN CRITERIA

THE FOLLOWING LOADS ARE PRESCRIBED BY THE INTERNATIONAL BUILDING CODE, 2012. LOADS ARE ALSO GENERATED FROM THE AASHTO STANDARD SPECIFICATIONS FOR HIGHWAY BRIDGES 17TH EDITION – 2002 WHERE NOTED.

DESIGN PARAMETERS

DOCK LIVE LOAD:
AASHTO H20 TRUCK (2 MONTH DURATION, Cd= 1.15)
400 PSF UNIFORM LOAD
50,000 lb. FORK LIFT AXLE LOAD (2 MONTH DURATION, Cd= 1.15)
200,000 lb. TRUCK CRANE (7 DAY DURATION, Cd= 1.25), OUT RIGGER LOAD (1–DAY DURATION, Cd=1.33) WHILE IN OPERATION OUTRIGGER MUST BE SPREAD OVER A MIN OF 5 STRINGERS AND THE LIFTING PLAN SHALL BE APPROVED BY A REGISTERED PROFESSIONAL ENGINEER IN THE STATE OF ALASKA AND SUBMITTED TO THE ENGINEER FOR APPROVAL.

VEHICLE GUARDRAILS:
6,000# POINT LOAD ANYWHERE ON RAIL OR POST
50 PLF @ HORIZONTAL PEDESTRIAN RAILS.

ADA APPROACH RAMP:
AASHTO H15 TRUCK (7 DAY DURATION, CD=1.25)
200PSF UNIFORM LOAD

OVER FRAMING:
100 PSF UNIFORM AREA LOAD
AASHTO H10 TRUCK (7 DAY DURATION (1)=1.25)

SNOW LOAD

GROUND SNOW LOAD = 70 PSF UNIFORM

SEISMIC LOAD

SITE CLASS =C, SOFT ROCK
SEISMIC DESIGN CATEGORY = D SIESMIC IMPORTANCE FACTOR = Ie=1.0
SS= 0.528g SDS=0.418g SIESMIC RESPONSE MODIFICATION FACTOR = R=1.0
SS= 0.356g SDS=0.343g SIESMIC RESPONSE COEFFICIENT FACTOR = CS=0.418

WIND LOAD

IBC 140 MPH 3–SECOND GUST, EXPOSURE D UNLESS OTHERWISE NOTED.
WIND OCCUPANCY IMPORTANCE = II

FLOOD LOAD

CODE: ASCE 7–16
BASE FLOOD ELEVATION (BFE) = +25' MLLW
BREAKING WAVE HEIGHT (Hb) = 3'
STILL WATER DEPTH (ds) = 50'

ABBREVIATIONS

ø	DIAMETER
@	AT
ADA	AMERICANS WITH DISABILITIES ACT
APPROX	APPROXIMATELY
ASCE	AMERICAN SOCIETY OF CIVIL ENGINEERS
AASHTO	AMERICAN ASSOCIATION OF STATE HIGHWAY TRANSPORTATION OFFICIALS
ASTM	AMERICAN SOCIETY OF TESTING AND MATERIALS
BTM	BOTTOM
CJ	CONSTRUCTION JOINT
℄	CENTERLINE
CON	CONNECTION
CONC.	CONCRETE
CONT	CONTINUOUS
CP	COMPLETE PENETRATION
CPP	CORRUGATED PLASTIC PIPE
CRNRS	CORNERS
CS	COUNTER SINK
DBL	DOUBLE
E	EXISTING
EA.	EACH
ELEV.	ELEVATION
E.W.	EACH WAY
FLGS	FLANGES
FTG	FOOTING
FND	FOUNDATION
GALV	GALVANIZED
GLB	GLUE–LAMINATED BEAM
GLULAM	GLUE LAMINATED TIMBER
HORZ.	HORIZANTAL
HDPE	HIGH–DENSITY POLYETHYLENE
kip	1000 POUNDS
Lb	POUND
LBS	POUNDS
MI	MALLEABLE IRON
MID	MIDDLE
MIN	MINIMUM
MLLW	MEAN LOW LOW WATER
NIC	NOT IN CONTRACT
NO.	NUMBER
O.C.	ON CENTER
OS.	OWNER SUPPLIED
OPP.	OPPOSITE
OSHA	OCCUPATIONAL SAFETY AND HEALTH ADMINISTRATION
ℙ	PLATE
PSF	POUND PER SQUARE FOOT
PLF	POUND PER LINEAR FOOT
PED	PEDESTRIAN
R	RADIUS
REG.	REGULATION
REQ'D	REQUIRED
SC	SLIP CRITICAL
SIM	SIMILAR
S.S.	STAINLESS STEEL
STA	STATION
STD	STANDARD
TRTD	TREATED
TYP.	TYPICAL
t	THICKNESS
UNO	UNLESS NOTED OTHERWISE
VERT.	VERTICAL
W/	WITH
W/OUT	WITH OUT
WP	WORK POINT

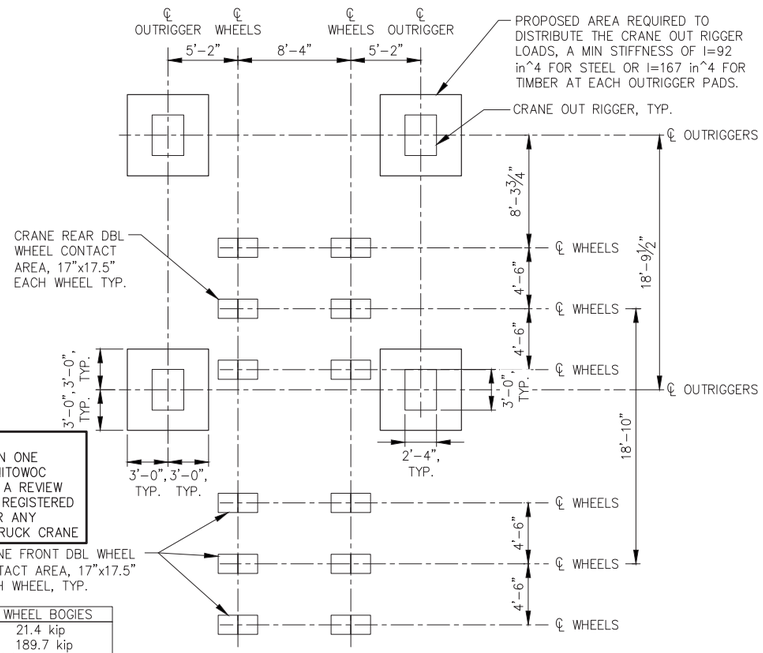

NOTE:
CRANE LOADING IS BASED ON ONE LENGTH OF BOOM ON A MANITOWOC 3900 SERIES TRUCK CRANE. A REVIEW SHALL BE COMPLETED BY A REGISTERED PROFESSIONAL ENGINEER FOR ANY VARIATION OF THE DESIGN TRUCK CRANE

CRANE FRONT AND REAR WHEEL BOGIES		
FRONT	= 70.6 kip	21.4 kip
REAR	= 140.5 kip	189.7 kip
OUTRIGGER	= 230kip OVER (2) OUTRIGGERS	

CRANE LOAD DISTRIBUTION REQUIREMENTS

FORKLIFT AXLE LOADS
FRONT = 44 kip
REAR = 6 kip

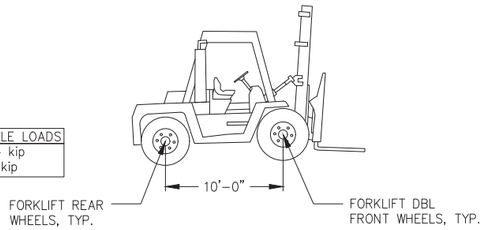

FORKLIFT ELEVATION

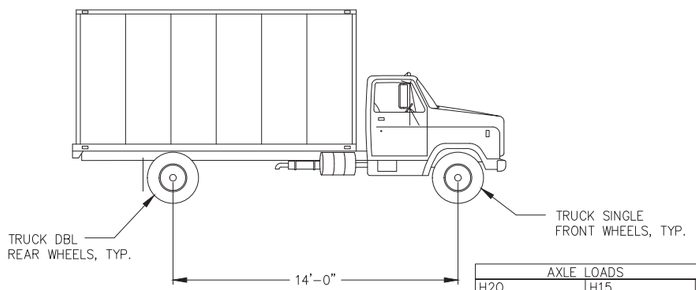

AXLE LOADS		
H20	H15	H10
FRONT = 8 kip	FRONT = 6 kip	FRONT = 4 kip
REAR = 32 kip	REAR = 24 kip	REAR = 16 kip

AASHTO TRUCK ELEVATION

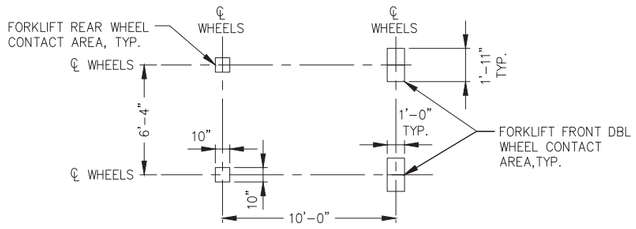

FORKLIFT WHEEL DISTRIBUTION LAYOUT

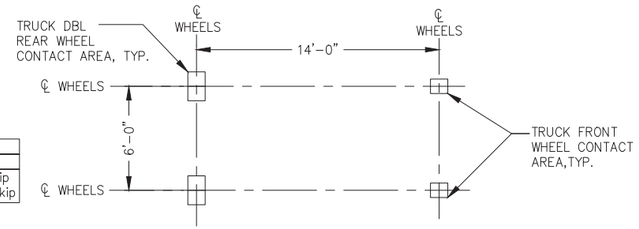

AASHTO TRUCK WHEEL DISTRIBUTION LAYOUT

REVISIONS

REV.	DATE	DESCRIPTION	DWN.	CKD.	APP.

P N D ENGINEERS, INC.
9360 Glacier Highway Ste 100
Juneau, Alaska 99801
Phone: 907-586-2093
Fax: 907-586-2099
www.pndengineers.com

DESIGN: MDS CHECKED: CRS
DRAWN: KLL APPROVED: CRS
SCALE: NTS
DATE: 5/23/2019

STATE OF ALASKA 49 TH Charles R. Somerville CE-8845 REGISTERED PROFESSIONAL ENGINEER

DOWNTOWN WATERFRONT IMPROVEMENTS PHASE I
CBJ CONTRACT NO. DH19-014

SHEET TITLE: **STRUCTURAL GENERAL NOTES**

PND PROJECT NO.: 182045 C.A.N. NO.: AECC250

S1.01

PILE SCHEDULE SUMMARY TABLE

LOCATION		DIA. (INCH)	THICKNESS (INCH)	BATTER	SUPPLY LENGTH (ft)	ULTIMATE LOAD (kips)	
						TENSION	COMPRESSION
CONCRETE DOCK	1B VERT	18"	0.500		90		370
	1C VERT	18"	0.500		90		400
	1C BATTER	18"	0.500	2V:1H	110	70	70
	1D VERT	18"	0.500		100		420
	1G VERT	18"	0.500		100		220
	2B VERT	18"	0.500		80		750
	2C VERT	18"	0.500		90		820
	2C BATTER	18"	0.500	2V:1H	100	70	70
	2D VERT	18"	0.500		90		620
	2D.5 VERT	18"	0.500		90		450
	2G VERT	18"	0.500		100		250
	3B VERT	18"	0.500		80		750
	3C VERT	18"	0.500		90		820
	3C BATTER	18"	0.500	2V:1H	110	70	70
	3D VERT	18"	0.500		90		620
	3D.5 VERT	18"	0.500		90		510
	3G VERT	18"	0.500		100		300
	4B VERT	18"	0.500		80		770
	4C VERT	18"	0.500		90		840
	4C BATTER	18"	0.500	2V:1H	100	70	70
	4D VERT	18"	0.500		90		840
	4E VERT	18"	0.500		90		620
	4G VERT	18"	0.500		90		200
	5B VERT	18"	0.500		90		730
	5C VERT	18"	0.500		90		800
	5C BATTER	18"	0.500	2V:1H	100	70	70
	5D VERT	18"	0.500		90		800
	5E VERT	18"	0.500		90		640
	5G VERT	18"	0.500		90		240
	6B.5 VERT	18"	0.500		90		710
	6C VERT	18"	0.500		90		760
	6D BATTER	18"	0.500	2V:1H	90	70	70
	6D VERT	18"	0.500		90		1020
	6E VERT	18"	0.500		90		880
	6G VERT	18"	0.500		90		370

PILE SCHEDULE SUMMARY TABLE

LOCATION		DIA. (INCH)	THICKNESS (INCH)	BATTER	SUPPLY LENGTH (ft)	ULTIMATE LOAD (kips)	
						TENSION	COMPRESSION
TIMBER DOCK	7C.5 VERT	18"	0.500		80		570
	7D VERT	18"	0.500		80		800
	7D BATTER	18"	0.500	2V:1H	100	70	70
	7E VERT	18"	0.500		80		1060
	7G VERT	18"	0.500		90		530
	8D VERT	16"	0.500		80		650
	8D BATTER	16"	0.500	2V:1H	90	70	70
	8E VERT	16"	0.500		80		850
	8G VERT	16"	0.500		80		540
	9E BATTER NW	16"	0.500	2V:1H	80		450
	9E BATTER SE	16"	0.500	2V:1H	90		450
	9F BATTER NW	16"	0.500	2V:1H	80		450
	9F BATTER SE	16"	0.500	2V:1H	90		450
	9G VERT	16"	0.500		80		170
	10E BATTER NW	16"	0.500	2V:1H	80		450
	10E BATTER SE	16"	0.500	2V:1H	90		450
	10F BATTER NW	16"	0.500	2V:1H	80		450
	10F BATTER SE	16"	0.500	2V:1H	90		450
	10G VERT	16"	0.500		80		280
	11E BATTER NW	16"	0.500	2V:1H	80		450
	11E BATTER SE	16"	0.500	2V:1H	80		450
	11F BATTER NW	16"	0.500	2V:1H	70		450
	11F BATTER SE	16"	0.500	2V:1H	90		450
	11G VERT	16"	0.500		80		380
	12E VERT	16"	0.500		70		680
	12F VERT	16"	0.500		70		710
	12G VERT	16"	0.500		80		380
APPROACH RAMP	13AA VERT	16"	0.500		70		200
	13BB VERT	16"	0.500		70	50	210
	13BB BATTER	16"	0.500	2V:1H	70	81	81
	13CC VERT	16"	0.500		70	54	210
	13CC BATTER	16"	0.500	2V:1H	70	84	81
	13G VERT	16"	0.500		70		110
	14AA VERT	16"	0.500		70		150
	14BB VERT	16"	0.500		70		160
	14CC VERT	16"	0.500		70		160
	14G VERT	16"	0.500		70		90
CANOPY FND.	3A' VERT	16"	0.500		90		100

RETAINING WALL PILE SCHEDULE SUMMARY TABLE

PILE DESIGNATION	NORTHING	EASTING	DIA. (INCH)	THICKNESS (INCH)	SUPPLY LENGTH (ft)	ULTIMATE LOAD (kips)
						COMPRESSION
1	2361819.69	2544107.73	24	0.750	60	500
2	2361816.99	2544103.94	24	0.750	60	500
3	2361809.47	2544108.93	24	0.750	60	950
4	2361801.11	2544114.47	24	0.750	60	500
5	2361792.78	2544120.00	24	0.750	60	500
6	2361784.46	2544125.51	24	0.750	60	950
7	2361776.11	2544131.05	24	0.750	70	500
8	2361767.78	2544136.58	24	0.750	70	500
9	2361759.45	2544142.10	24	0.750	70	950
10	2361751.11	2544147.63	24	0.750	70	500
11	2361742.78	2544153.16	24	0.750	70	500
12	2361734.44	2544158.68	24	0.750	70	950
13	2361731.88	2544169.00	24	0.750	80	500
14	2361729.74	2544179.60	24	0.750	80	500
15	2361727.59	2544190.19	24	0.750	80	500
16	2361725.44	2544200.79	24	0.750	80	950
17	2361718.06	2544207.73	24	0.750	70	500
18	2361709.73	2544213.26	24	0.750	70	500
19	2361701.39	2544218.78	24	0.750	70	950
20	2361699.36	2544228.81	24	0.750	70	500
21	2361697.33	2544238.84	24	0.750	70	500
22	2361695.30	2544248.86	24	0.750	70	500
23	2361693.27	2544258.89	24	0.750	70	500
24	2361691.24	2544268.91	24	0.750	70	700
25	2361689.21	2544278.94	24	0.750	70	700
26	2361687.18	2544288.97	24	0.750	70	500
27	2361675.04	2544296.58	24	0.750	70	950
28	2361664.59	2544303.14	24	0.750	70	500
29	2361654.14	2544309.70	24	0.750	70	950
30	2361643.69	2544316.25	24	0.750	70	500
31	2361633.24	2544322.81	24	0.750	70	950
32	2361623.10	2544329.17	24	0.750	70	500
33	2361612.97	2544335.53	24	0.750	70	950
34	2361602.84	2544341.89	24	0.750	70	500
35	2361592.70	2544348.24	24	0.750	70	950
36	2361597.33	2544357.52	24	0.750	70	500
SPARE	NA	NA	24	0.750	40	-

NOTES:

1. ALL PILES SHALL BE FABRICATED WITH AN APF INSIDE FLANGE OPEN CUTTING SHOE.
2. RETAINING WALL PILES ARE OWNER SUPPLIED, COORDINATE WITH OWNER FOR STORAGE LOCATION, CONTRACTOR SHALL SORT AND DELIVER PILES FROM STORAGE LOCATION TO JOB SITE, INCIDENTAL TO PILE INSTALLATION BID ITEM.

CITY & BOROUGH OF JUNEAU — DOCKS & HARBORS

REVISIONS

REV.	DATE	DESCRIPTION	DWN.	CKD.	APP.

PND ENGINEERS, INC.
9360 Glacier Highway Ste 100
Juneau, Alaska 99801
Phone: 907-586-2093
Fax: 907-586-2099
www.pndengineers.com

DESIGN: MDS CHECKED: CRS
DRAWN: PJD APPROVED: CRS
SCALE: NTS
DATE: 5/23/2019

STATE OF ALASKA 49 TH — Charles R. Somerville CE-8845 — REGISTERED PROFESSIONAL ENGINEER

DOWNTOWN WATERFRONT IMPROVEMENTS PHASE I
CBJ CONTRACT NO. DH19-014

SHEET TITLE: **PILE SCHEDULES**

PND PROJECT NO.: 182045 C.A.N. NO.: AECC250

S1.02

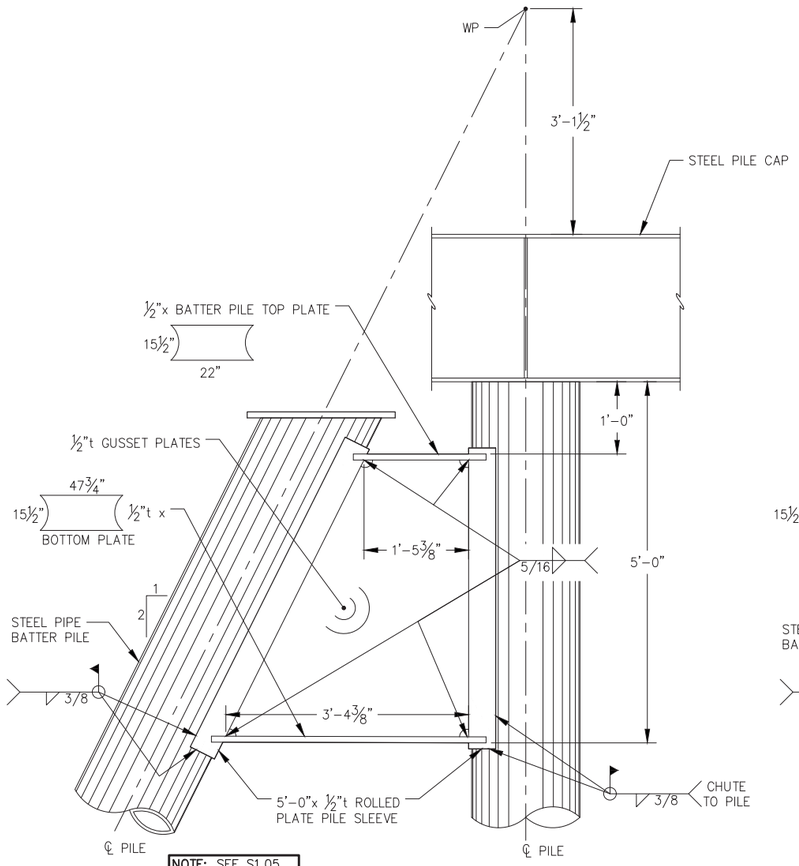

NOTE: SEE S1.05 FOR VERTICAL PILE WELD TO CAP

ELEVATION

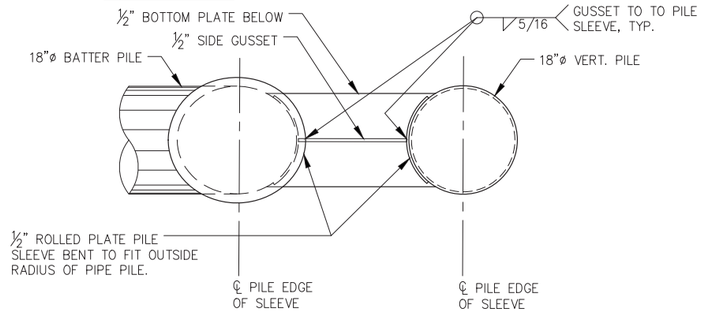

TYPICAL 18" SIDE BATTER PILE CONNECTION PLAN

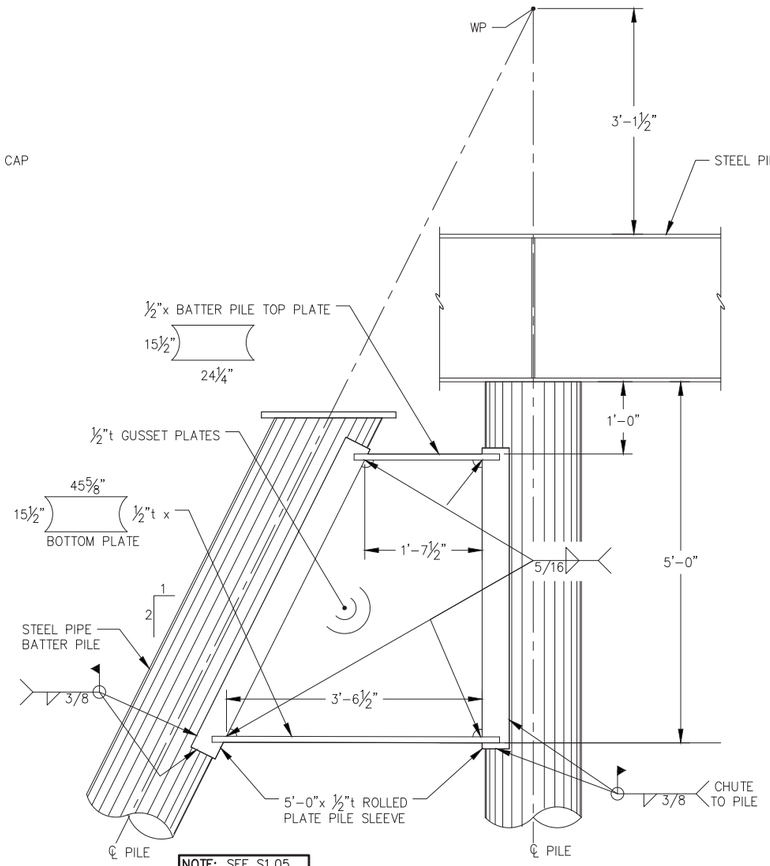

NOTE: SEE S1.05 FOR VERTICAL PILE WELD TO CAP

ELEVATION

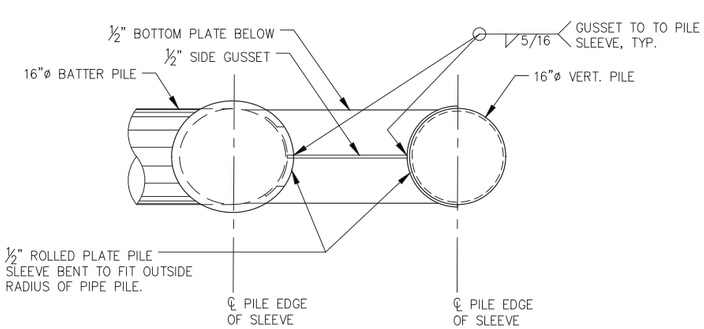

TYPICAL 16" SIDE BATTER PILE CONNECTION PLAN AT W24 PILE CAP

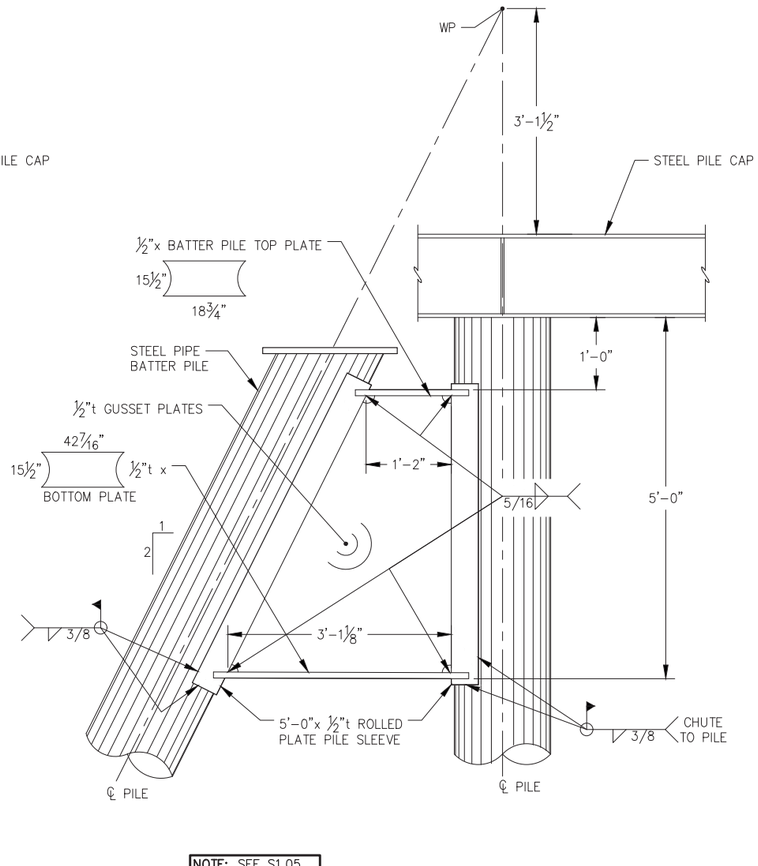

NOTE: SEE S1.05 FOR VERTICAL PILE WELD TO CAP

ELEVATION

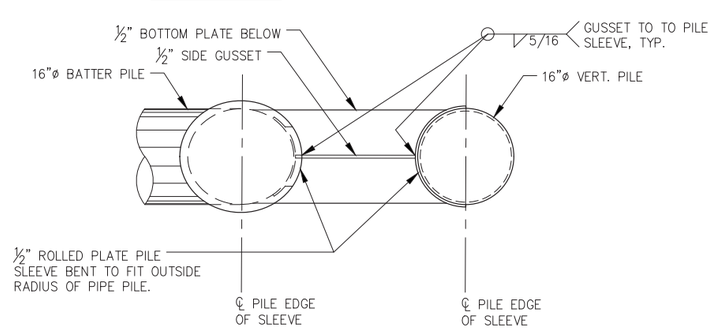

TYPICAL 16" SIDE BATTER PILE CONNECTION PLAN AT HP14 PILE CAP

REVISIONS

REV.	DATE	DESCRIPTION	DWN.	CKD.	APP.

P N D ENGINEERS, INC.
9360 Glacier Highway Ste 100
Juneau, Alaska 99801
Phone: 907-586-2093
Fax: 907-586-2099
www.pndengineers.com

DESIGN: MDS CHECKED: CRS
DRAWN: KLL APPROVED: CRS
SCALE: NTS
DATE: 5/23/2019

STATE OF ALASKA 49TH Charles R. Somerville CE-8845 REGISTERED PROFESSIONAL ENGINEER

DOWNTOWN WATERFRONT IMPROVEMENTS PHASE I
CBJ CONTRACT NO. DH19-014

SHEET TITLE:
PILE TYPICAL DETAILS

PND PROJECT NO.: 182045 C.A.N. NO.: AECC250

S1.03

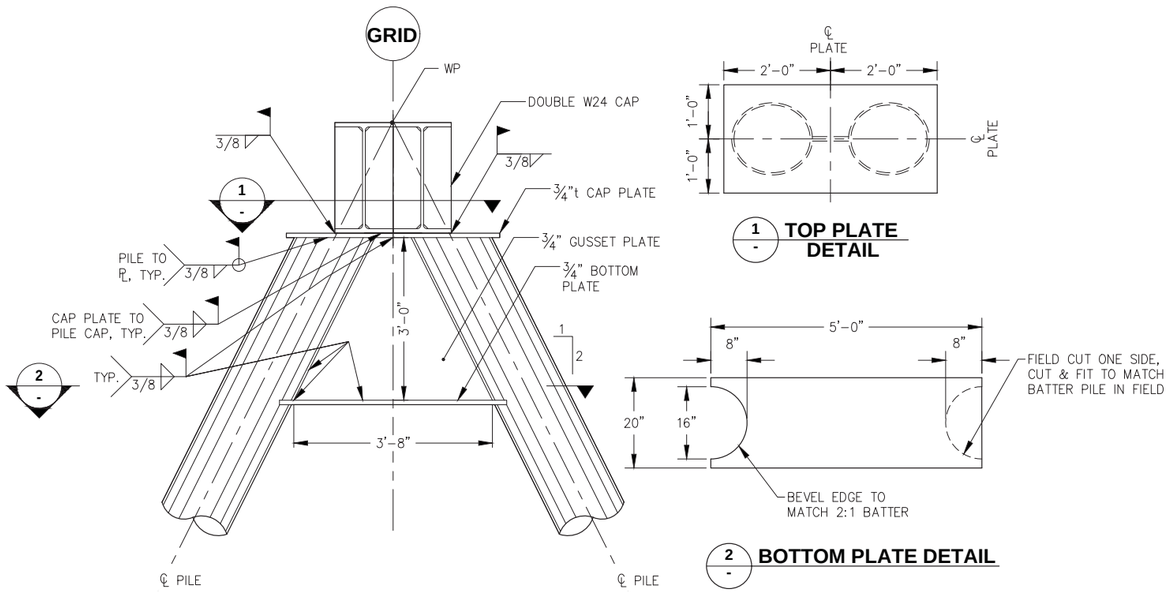

TYPICAL DOUBLE BATTER PILE CONNECTION

1 - TOP PLATE DETAIL

2 - BOTTOM PLATE DETAIL

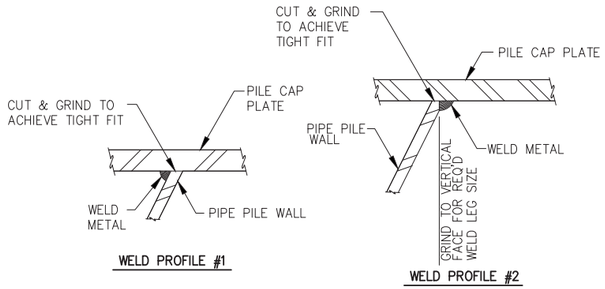

WELD PROFILE #1

WELD PROFILE #2

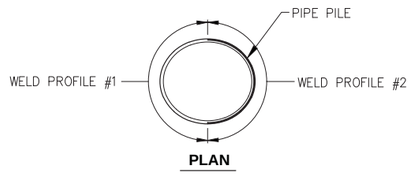

PLAN

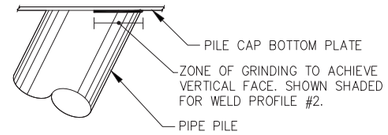

BATTER PILE TOP PLATE ELEVATION

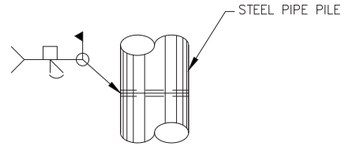

TYPICAL SPLICE ELEVATION

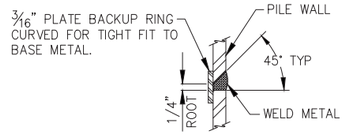

TYPICAL SPLICE SECTION

TYPICAL PILE CONNECTION DETAILS

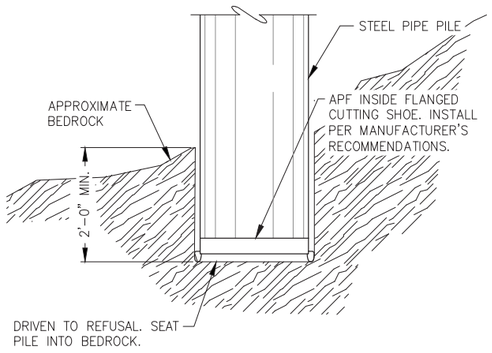

PILE DRIVING TIP DETAIL

REVISIONS

REV.	DATE	DESCRIPTION	DWN.	CKD.	APP.

P N D ENGINEERS, INC.
9360 Glacier Highway Ste 100
Juneau, Alaska 99801
Phone: 907-586-2093
Fax: 907-586-2099
www.pndengineers.com

DESIGN: MDS CHECKED: CRS
DRAWN: KLL APPROVED: CRS
SCALE: NTS
DATE: 5/23/2019

STATE OF ALASKA 49 TH Charles R. Somerville CE-8845 REGISTERED PROFESSIONAL ENGINEER

DOWNTOWN WATERFRONT IMPROVEMENTS PHASE I
CBJ CONTRACT NO. DH19-014

SHEET TITLE: **PILE TYPICAL DETAILS**

S1.04

PND PROJECT NO.: 182045 C.A.N. NO.: AECC250

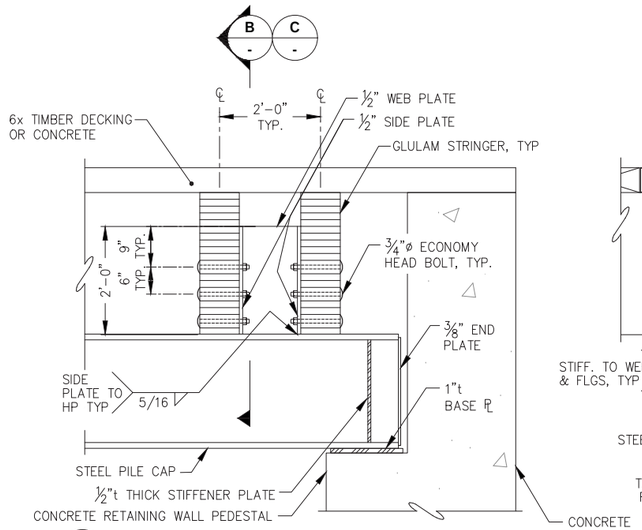

A - **TYPICAL STRINGER CONNECTION ELEVATION**

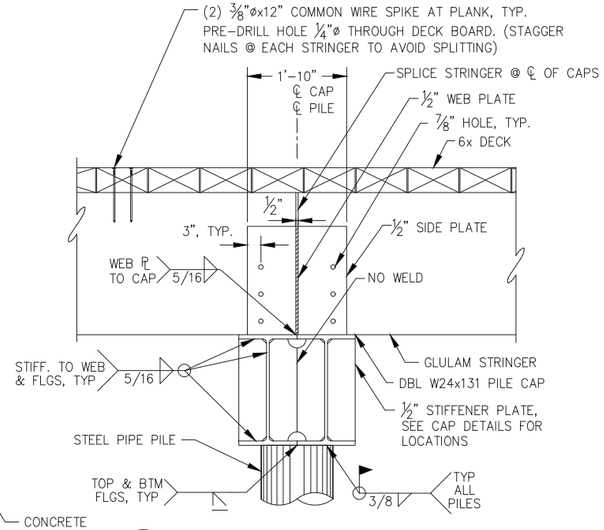

B - **TYPICAL PILE CAP SECTION AT TIMBER DECK**

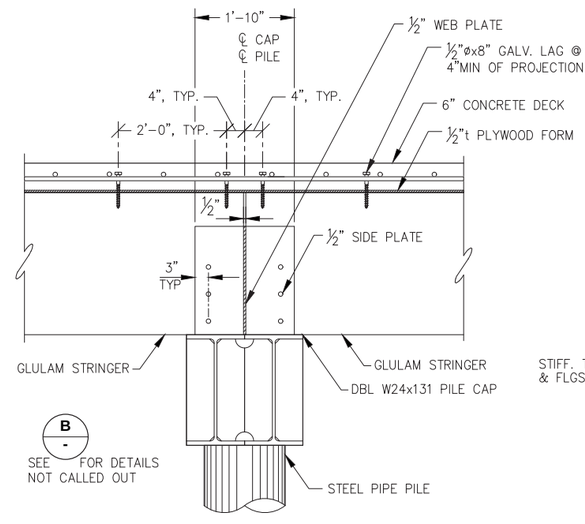

C - **TYPICAL PILE CAP SECTION AT CONCRETE DECK**

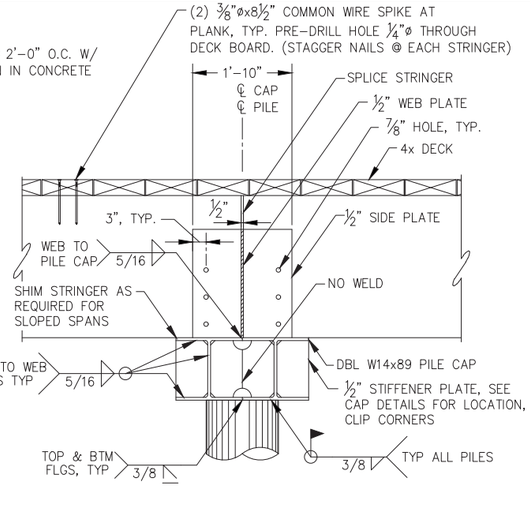

D - **TYPICAL PILE CAP DETAIL AT ADA APPROACH RAMP**

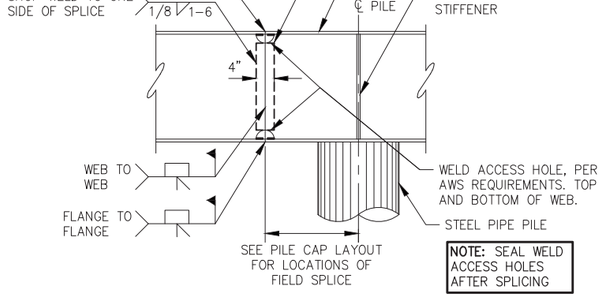

E - **TYPICAL PILE CAP FIELD SPLICE DETAIL**

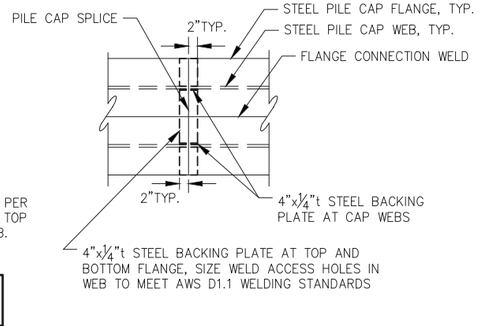

F - **TYPICAL STEEL PILE CAP FIELD SPLICE DETAIL**

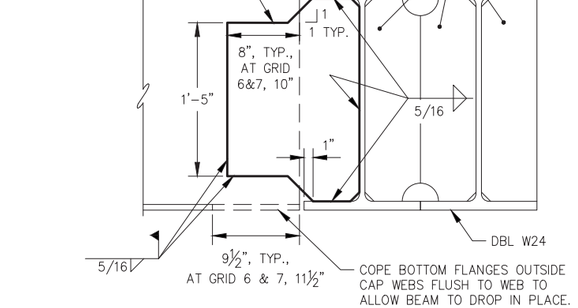

G - **TYPICAL PILE CAP CONNECTION DETAIL**

NOTE: ℄ NOT REQUIRED AT PILE CAP TO PILE CAP CONNECTIONS.

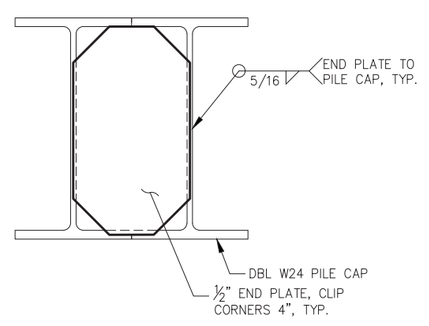

H - **TYPICAL PILE END PLATE DETAIL AT DBL W24 PILE CAPS**

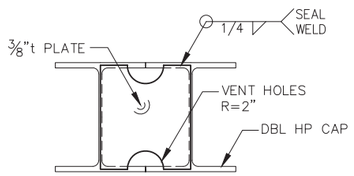

I - **PILE CAP END PLATE FOR DOUBLE HP PILE CAPS**

REVISIONS

REV.	DATE	DESCRIPTION	DWN.	CKD.	APP.

PND ENGINEERS, INC.
9360 Glacier Highway Ste 100
Juneau, Alaska 99801
Phone: 907-586-2093
Fax: 907-586-2099
www.pndengineers.com

DESIGN: MDS CHECKED: CRS
DRAWN: KLL APPROVED: CRS
SCALE: NTS
DATE: 5/23/2019

STATE OF ALASKA 49 TH
Charles R. Somerville
CE-8845
REGISTERED PROFESSIONAL ENGINEER

DOWNTOWN WATERFRONT IMPROVEMENTS PHASE I
CBJ CONTRACT NO. DH19-014

SHEET TITLE: **TYPICAL DOCK FRAMING DETAILS**

PND PROJECT NO.: 182045 C.A.N. NO.: AECC250

S1.05

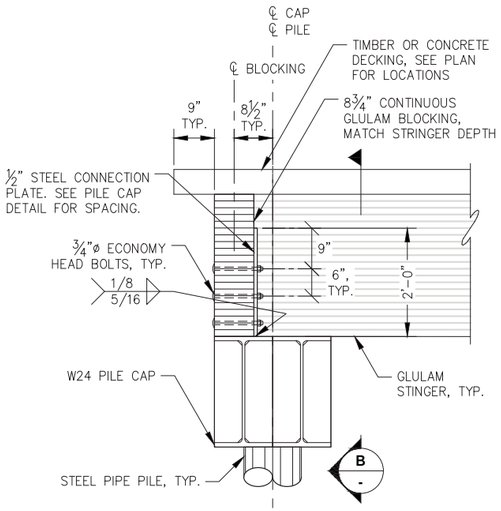

A - TYPICAL BLOCKING CONNECTION PLATE AT GRID G PILE CAP

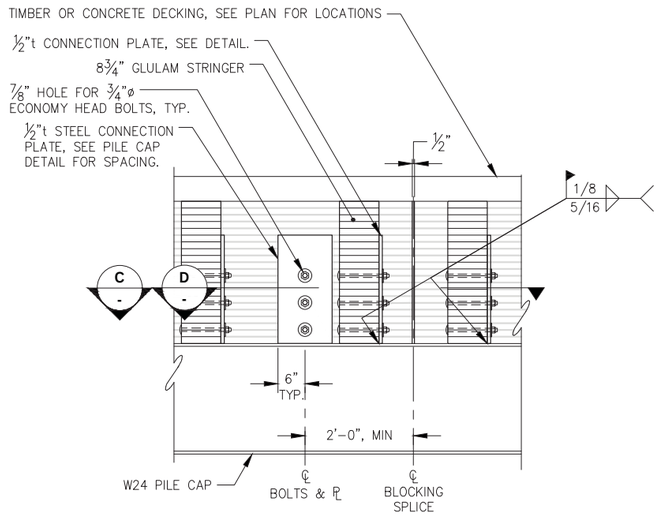

B - TYPICAL STRINGER CONNECTION ELEVATION AT DIAGONAL GLULAM BLOCKING

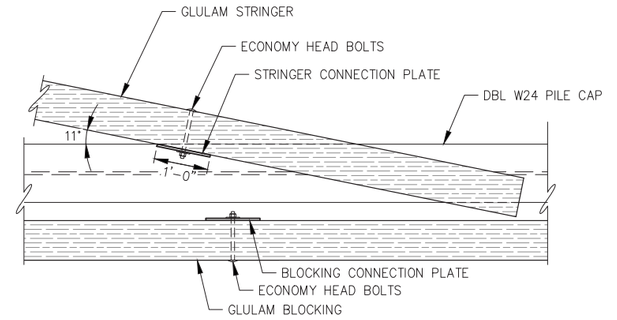

C - TYPICAL ANGLE CONNECTION PLATE AT CONTINUOUS GLULAM BLOCKING TYPE 1 (11°)

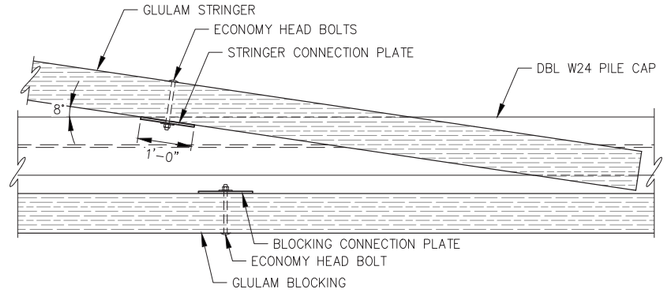

D - TYPICAL ANGLE CONNECTION PLATE AT CONTINUOUS GLULAM BLOCKING TYPE 2 (8°)

E - STRINGER TO CONCRETE WALL CONNECTION SECTION

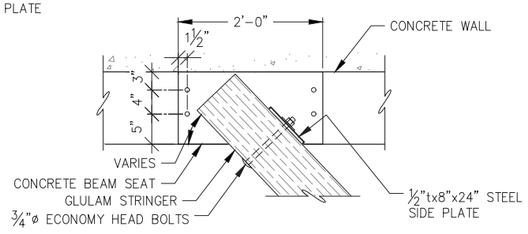

F - STRINGER TO CONCRETE WALL CONNECTION PLAN

CITY & BOROUGH OF JUNEAU — DOCKS & HARBORS

REVISIONS

REV.	DATE	DESCRIPTION	DWN.	CKD.	APP.

PND ENGINEERS, INC.
9360 Glacier Highway Ste 100
Juneau, Alaska 99801
Phone: 907-586-2093
Fax: 907-586-2099
www.pndengineers.com

DESIGN: MDS CHECKED: CRS
DRAWN: KLL APPROVED: CRS
SCALE: NTS

STATE OF ALASKA — 49TH — Charles R. Somerville CE-8845 — REGISTERED PROFESSIONAL ENGINEER
DATE: 5/23/2019

DOWNTOWN WATERFRONT IMPROVEMENTS PHASE I
CBJ CONTRACT NO. DH19-014

SHEET TITLE: **TYPICAL DOCK FRAMING DETAILS**

PND PROJECT NO.: 182045 C.A.N. NO.: AECC250

S1.06

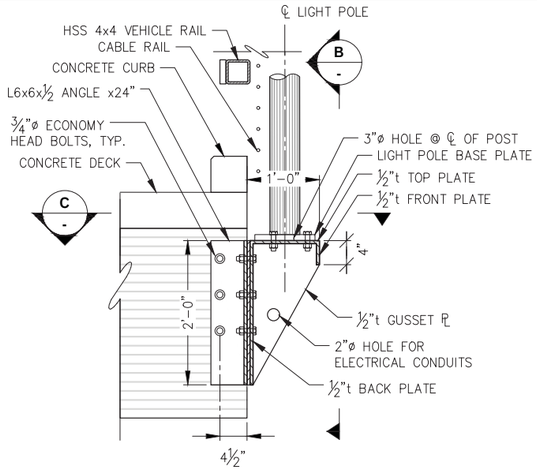

A - TYPICAL LIGHT POLE BRACKET TYPE 1 SECTION END STRINGER

(3) EACH, SEE CIVIL FOR LOCATIONS

NOTE:
USE SIMILAR BRACKET AND BOLT PATTERN FOR LIGHT POLE MOUNT @ CONCRETE RETAINING WALL, MOUNT BACK PLATE FLUSH WITH CONCRETE WALL AND EMBED ANCHOR BOLTS 8" MIN.

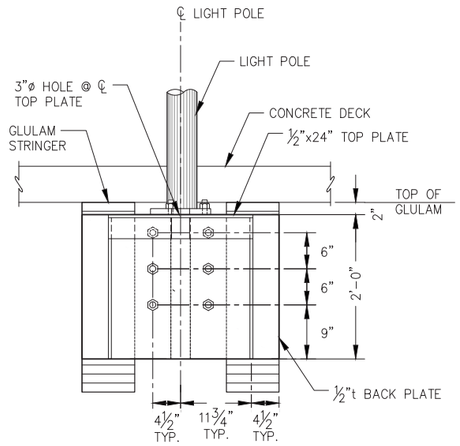

B - LIGHT POLE BRACKET DETAIL END STRINGER

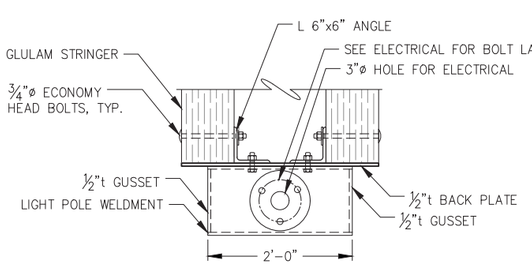

C - TYPICAL LIGHT POLE BRACKET PLAN END STRINGER

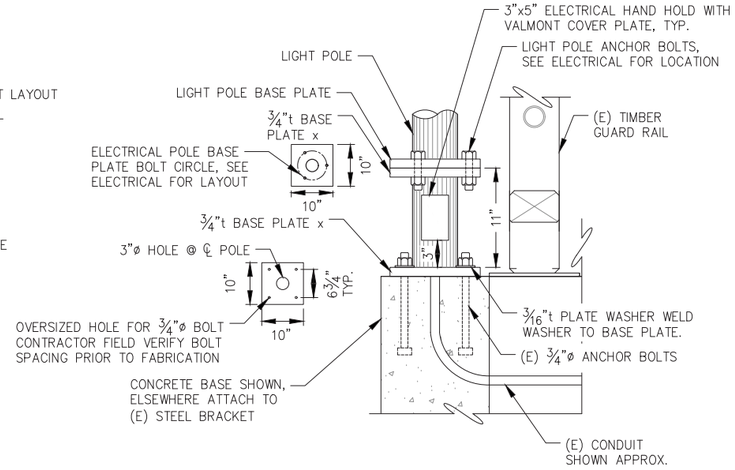

D - LIGHT POLE BRACKET TYPE 2 EXTENSION

(13) EACH, SEE ELECTRICAL FOR LOCATIONS

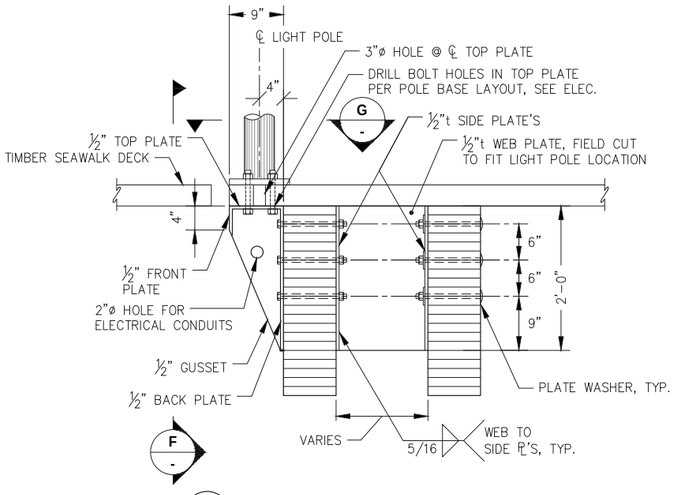

E - LIGHT POLE BRACKET TYPE 3 DETAIL STRINGER SIDE MOUNT

(6) EACH, SEE CIVIL FOR LOCATIONS

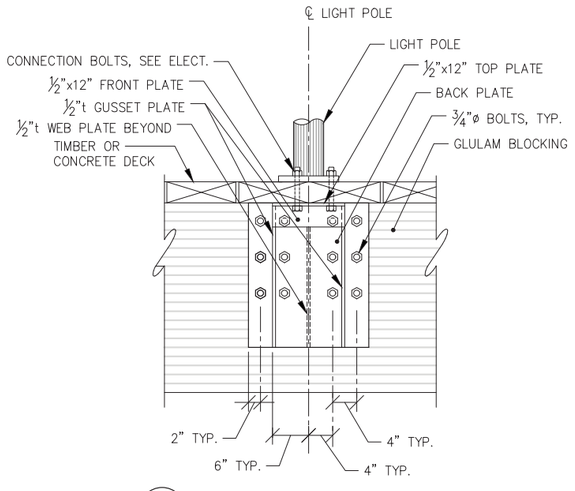

F - TYPICAL LIGHT POLE BRACKET SECTION STRINGER SIDE MOUNT

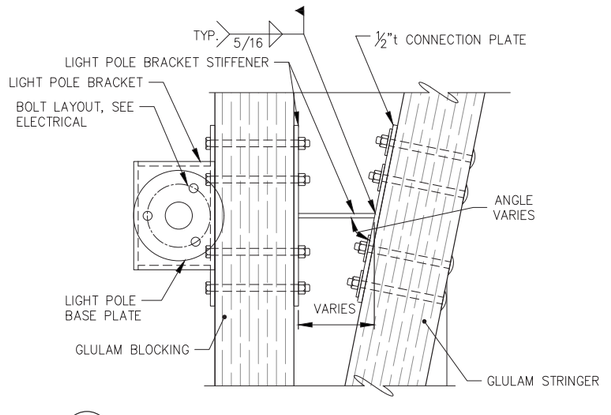

G - TYPICAL LIGHT POLE BRACKET STRINGER

REVISIONS

REV.	DATE	DESCRIPTION	DWN.	CKD.	APP.

PND ENGINEERS, INC.
9360 Glacier Highway Ste 100
Juneau, Alaska 99801
Phone: 907-586-2093
Fax: 907-586-2099
www.pndengineers.com

DESIGN: MDS CHECKED: CRS
DRAWN: KLL APPROVED: CRS
SCALE: NTS
DATE: 5/23/2019

STATE OF ALASKA 49TH — Charles R. Somerville CE-8845 REGISTERED PROFESSIONAL ENGINEER

DOWNTOWN WATERFRONT IMPROVEMENTS PHASE I
CBJ CONTRACT NO. DH19-014

SHEET TITLE: **LIGHT POLE TYPICAL DETAILS**

S1.07

PND PROJECT NO.: 182045 C.A.N. NO.: AECC250

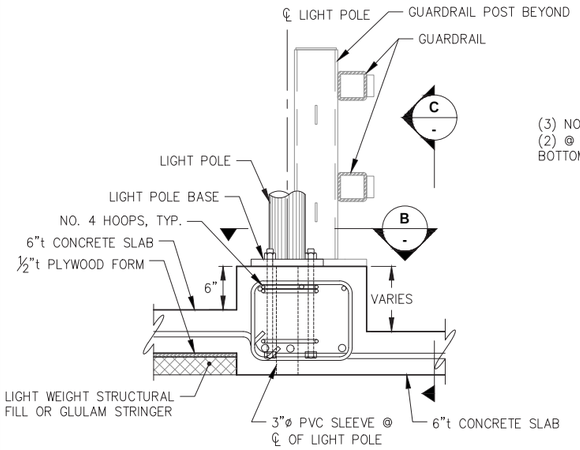

A - LIGHT POLE BRACKET TYPE 4 SECTION ON CURB

(2) REQUIRED SEE CIVIL FOR LOCATION

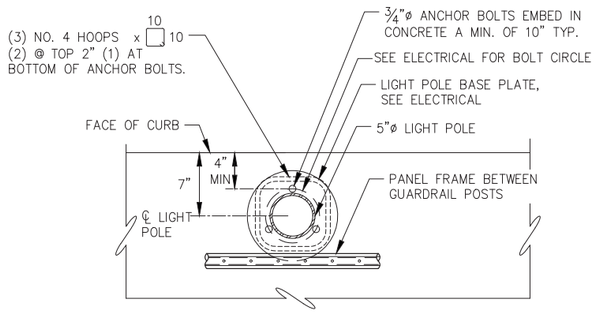

B - LIGHT POLE BRACKET PARTIAL PLAN AT CURB

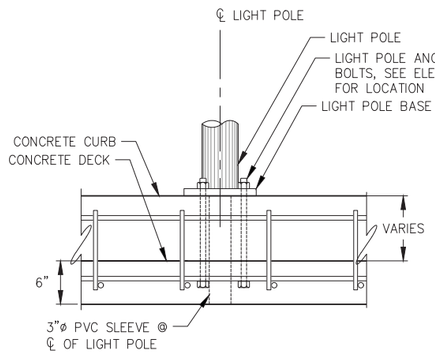

C - LIGHT POLE BRACKET DETAIL ON CONCRETE CURB

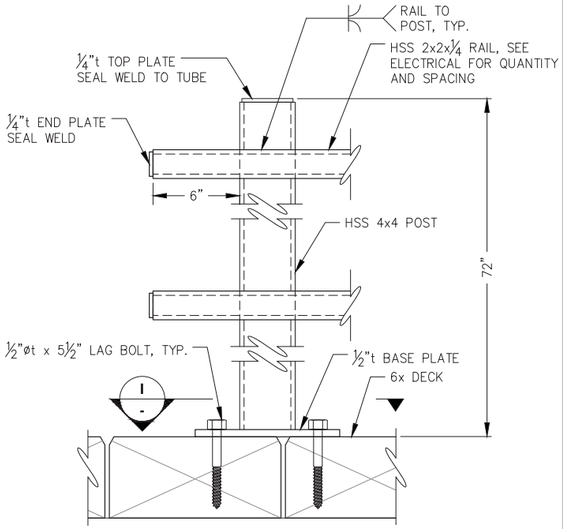

D - TYPICAL ELECTRICAL RACK POST ELEVATION

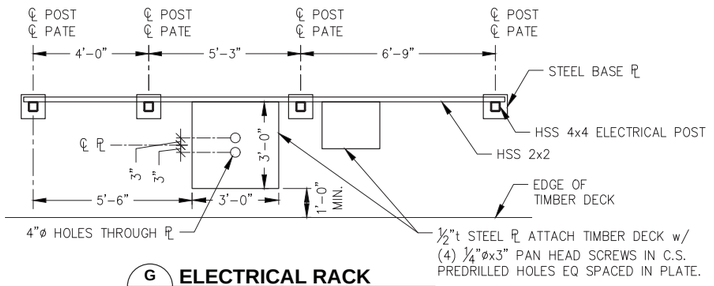

G - ELECTRICAL RACK PARTIAL FRAMING PLAN

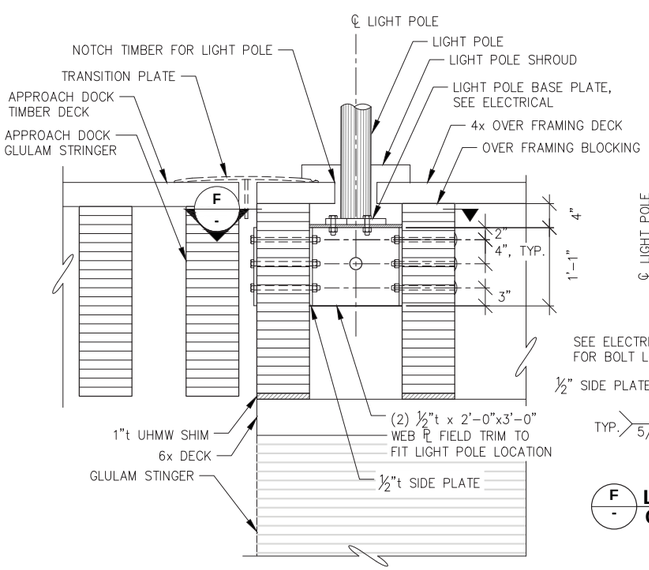

E - LIGHT POLE BRACKET TYPE 5 DOCK AND OVERFRAMING

(1) REQUIRED SEE CIVIL FOR LOCATION

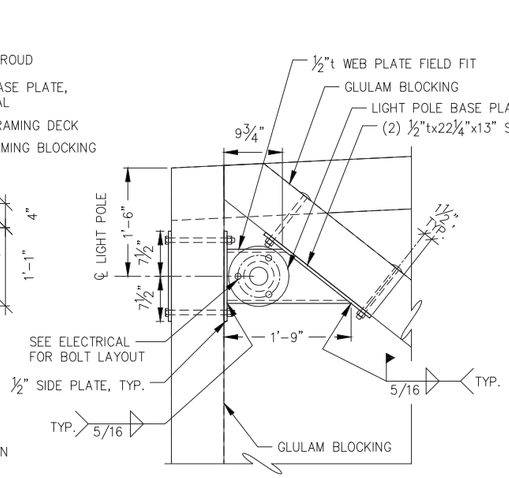

F - LIGHT POLE CONNECTION DETAIL AT OVER FRAMING AND APPROACH DOCK

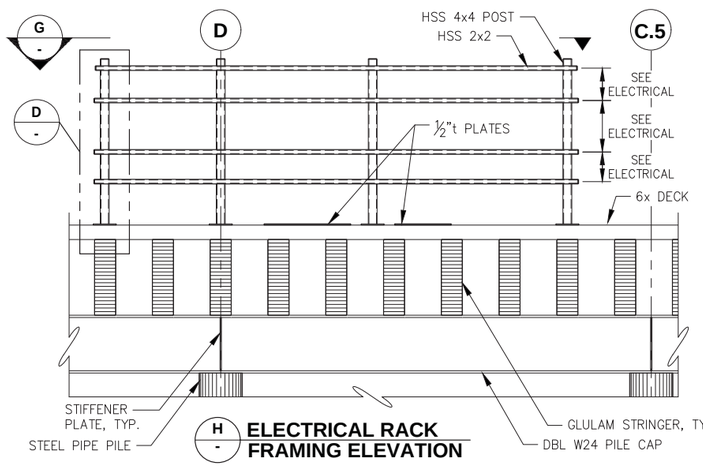

H - ELECTRICAL RACK FRAMING ELEVATION

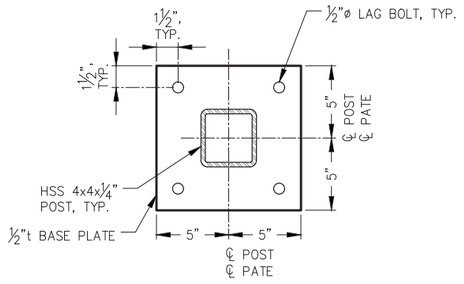

I - ELECTRICAL RACK BASE PLATE

REVISIONS

REV.	DATE	DESCRIPTION	DWN.	CKD.	APP.

CITY & BOROUGH OF JUNEAU DOCKS & HARBORS

PND ENGINEERS, INC.
9360 Glacier Highway Ste 100
Juneau, Alaska 99801
Phone: 907-586-2093
Fax: 907-586-2099
www.pndengineers.com

DESIGN: MDS CHECKED: CRS
DRAWN: KLL APPROVED: CRS
SCALE: NTS

STATE OF ALASKA 49TH — Charles R. Somerville CE-8845 — REGISTERED PROFESSIONAL ENGINEER
DATE: 5/23/2019

DOWNTOWN WATERFRONT IMPROVEMENTS PHASE I
CBJ CONTRACT NO. DH19-014

SHEET TITLE:
LIGHT POLE TYPICAL DETAILS

PND PROJECT NO.: 182045 C.A.N. NO.: AECC250

S1.08

WALL LAYOUT AND ELEVATIONS

POINT	NORTHING	EASTING	ELEV. FINISHED GRADE	DESCRIPTION
1	2361822.39	2544111.55	28.52	OUTSIDE FACE OF WALL AT END
2	2361816.99	2544103.94	28.52	℄ PILE
3	2361734.44	2544158.68	28.52	℄ PILE
4	2361724.07	2544202.55	28.52	OUTSIDE FACE OF WALL AT ANGLE POINT
5	2361701.39	2544218.78	28.52	℄ PILE
6	2361687.18	2544288.97	28.52	℄ PILE
7	2361592.70	2544348.24	27.17	℄ PILE
8	2361600.84	2544365.92	27.17	OUTSIDE FACE OF WALL AT END

NOTE:
FINISHED GRADE= TOP OF SLAB/TIMBER DECK AT ℄ CONCRETE WALL.

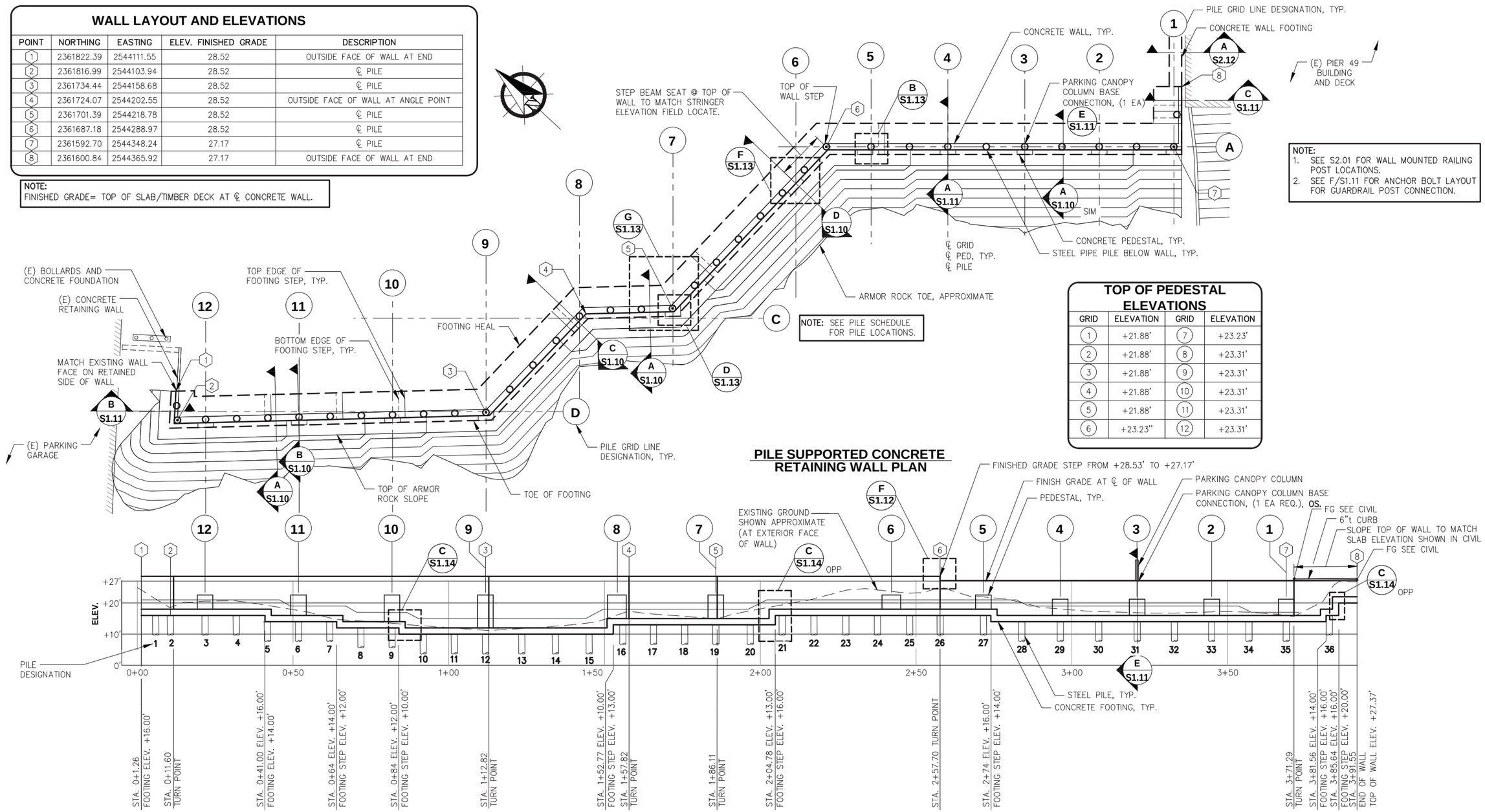

NOTE: SEE PILE SCHEDULE FOR PILE LOCATIONS.

NOTE:
1. SEE S2.01 FOR WALL MOUNTED RAILING POST LOCATIONS.
2. SEE F/S1.11 FOR ANCHOR BOLT LAYOUT FOR GUARDRAIL POST CONNECTION.

TOP OF PEDESTAL ELEVATIONS

GRID	ELEVATION	GRID	ELEVATION
1	+21.88'	7	+23.23'
2	+21.88'	8	+23.31'
3	+21.88'	9	+23.31'
4	+21.88'	10	+23.31'
5	+21.88'	11	+23.31'
6	+23.23"	12	+23.31'

PILE SUPPORTED CONCRETE RETAINING WALL PLAN

NOTE:
1. STATIONING IS AT SEAWARD FACE OF WALL
2. TOP OF CONCRETE WALL = COORDINATE FINISH GRADE WITH CIVIL PLANS, SLAB AND TIMBER DECKS NOT SHOWN FOR CLARITY
3. STA. FOOTING ELEVATIONS = BOTTOM OF FOOTING ELEVATION.

RETAINING WALL PROFILE

NOTE: OS INDICATES OWNER SUPPLIED MATERIALS

CITY & BOROUGH OF JUNEAU — DOCKS & HARBORS

REVISIONS

REV.	DATE	DESCRIPTION	DWN.	CKD.	APP.

PND ENGINEERS, INC.
9360 Glacier Highway Ste 100
Juneau, Alaska 99801
Phone: 907-586-2093
Fax: 907-586-2099
www.pndengineers.com

DESIGN: MDS CHECKED: CRS
DRAWN: KLL APPROVED: CRS
SCALE: SCALE IN FEET 0 15 30 FT.

STATE OF ALASKA — 49TH — Charles R. Somerville — CE-8845 — REGISTERED PROFESSIONAL ENGINEER
DATE: 5/23/2019

DOWNTOWN WATERFRONT IMPROVEMENTS PHASE I
CBJ CONTRACT NO. DH19-014

SHEET TITLE:
CONCRETE RETAINING WALL PLAN AND PROFILE

PND PROJECT NO.: 182045 C.A.N. NO.: AECC250

S1.09

Attachment G – BLD2019-0321

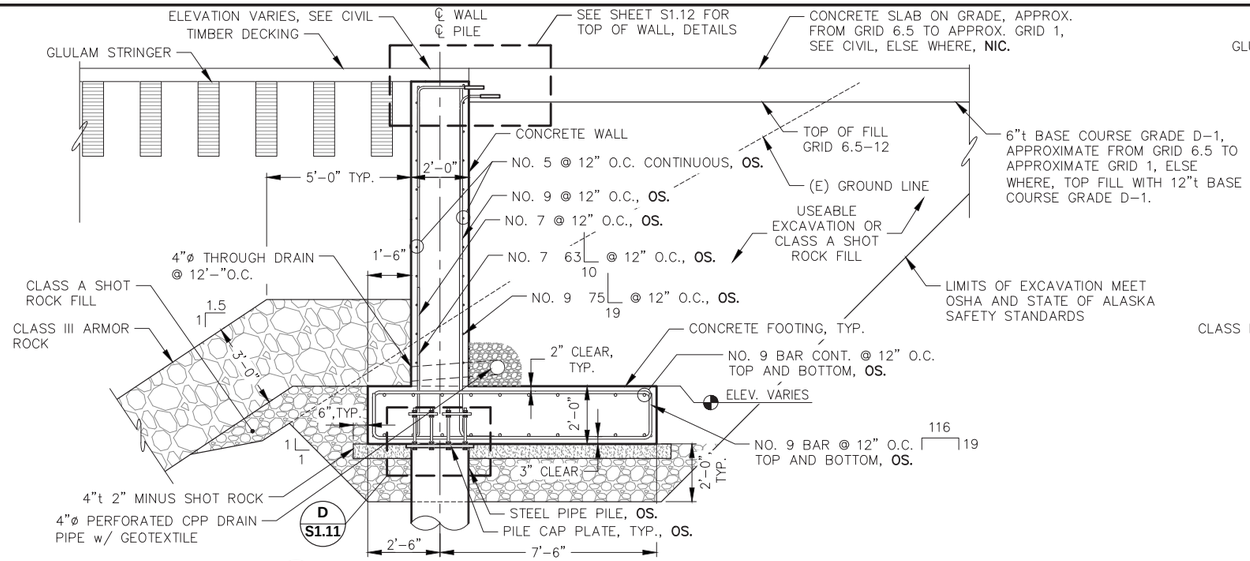

A S1.09 **TYPICAL RETAINING WALL SECTION**

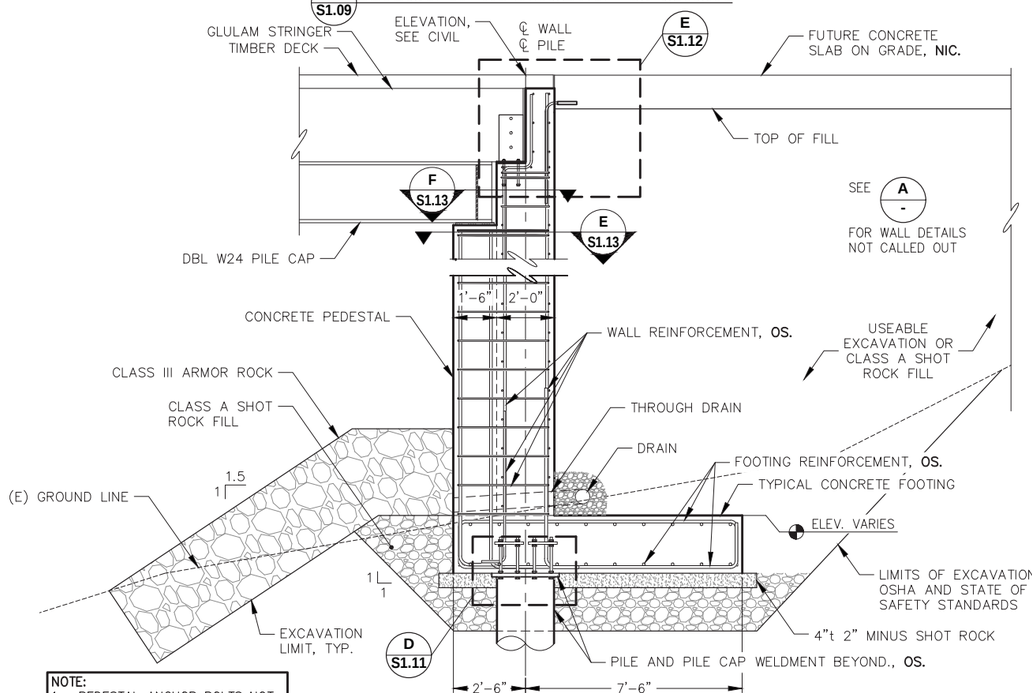

NOTE:
1. PEDESTAL ANCHOR BOLTS NOT SHOWN.
2. SEE SHEET S1.13 FOR PEDESTAL DETAILS NOT CALLED OUT

C S1.09 **RETAINING WALL SECTION WITH PEDESTAL**

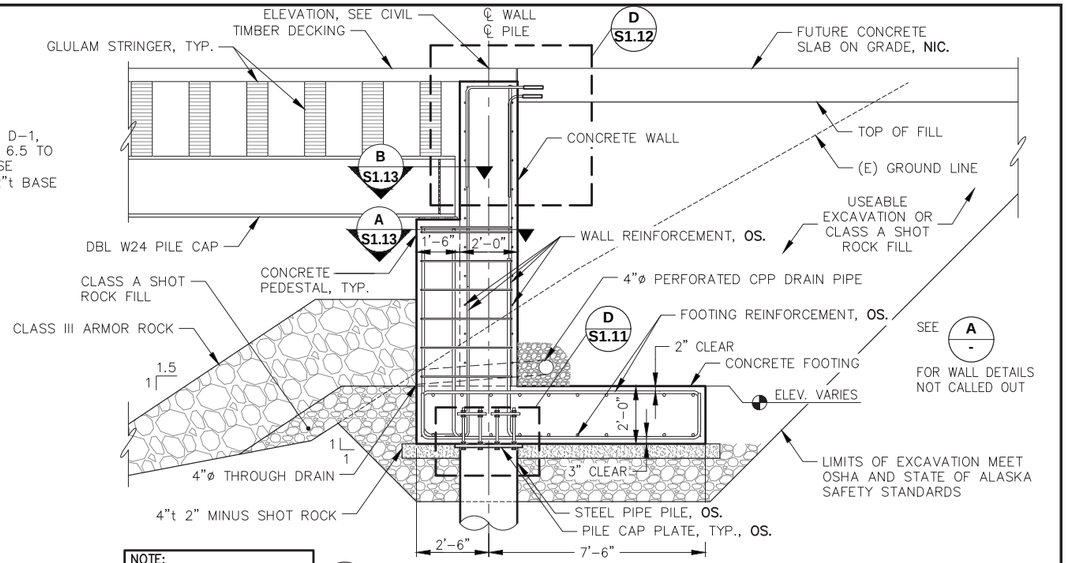

NOTE:
1. PEDESTAL ANCHOR BOLTS NOT SHOWN.
2. SEE SHEET S1.13 FOR PEDESTAL DETAILS NOT CALLED OUT

B S1.09 **RETAINING WALL SECTION WITH PEDESTAL**

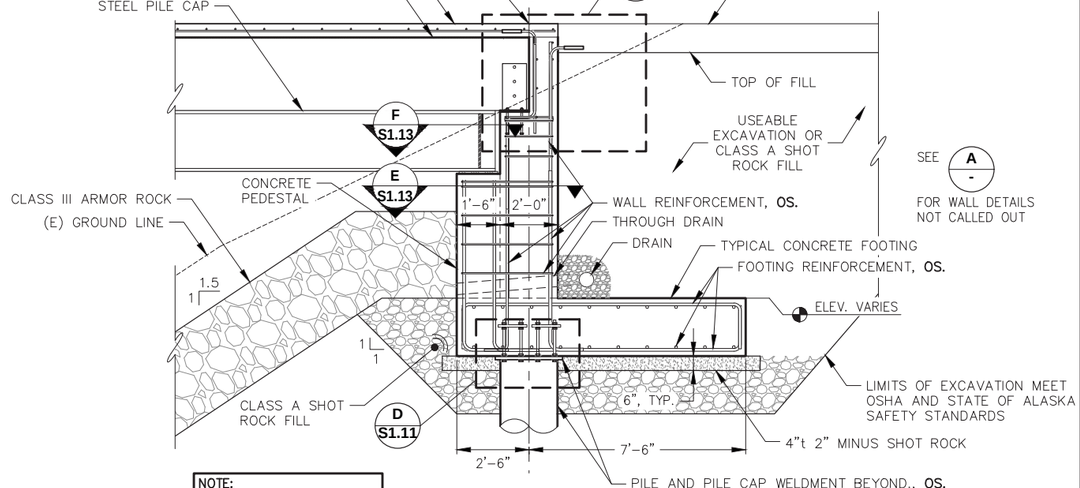

NOTE:
1. PEDESTAL ANCHOR BOLTS NOT SHOWN.
2. SEE SHEET S1.13 FOR PEDESTAL DETAILS NOT CALLED OUT

D S1.09 **RETAINING WALL SECTION WITH PEDESTAL**

NOTE: OS. INDICATES OWNER SUPPLIED MATERIALS

CITY & BOROUGH OF JUNEAU — DOCKS & HARBORS

REVISIONS

REV.	DATE	DESCRIPTION	DWN.	CKD.	APP.

PND ENGINEERS, INC.
9360 Glacier Highway Ste 100
Juneau, Alaska 99801
Phone: 907-586-2093
Fax: 907-586-2099
www.pndengineers.com

DESIGN: MDS CHECKED: CRS
DRAWN: KLL APPROVED: CRS
SCALE: NTS

STATE OF ALASKA 49TH — Charles R. Somerville CE-8845 — REGISTERED PROFESSIONAL ENGINEER
DATE: 5/23/2019

DOWNTOWN WATERFRONT IMPROVEMENTS PHASE I
CBJ CONTRACT NO. DH19-014

SHEET TITLE: **CONCRETE RETAINING WALL SECTIONS**

PND PROJECT NO.: 182045 C.A.N. NO.: AECC250

S1.10

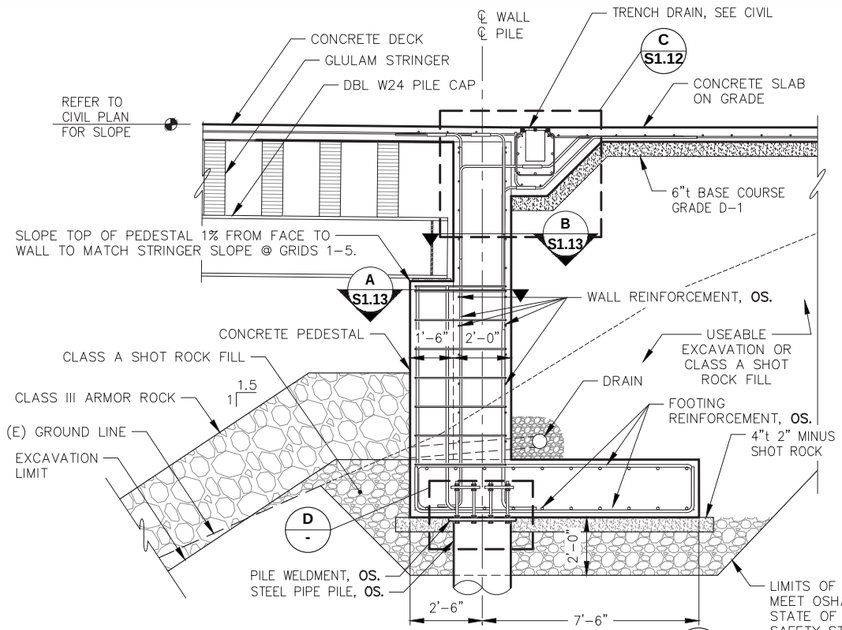

A S1.09 **RETAINING WALL SECTION**

NOTE:
1. PEDESTAL ANCHOR BOLTS NOT SHOWN.
2. SEE SHEET S1.13 FOR PEDESTAL DETAILS NOT CALLED OUT

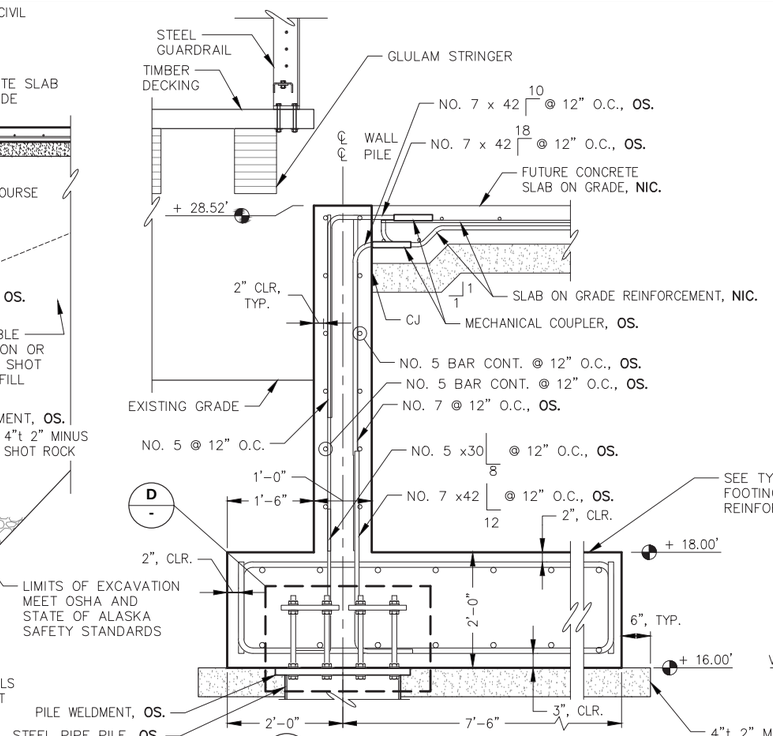

B S1.09 **RETAINING WALL SECTION**

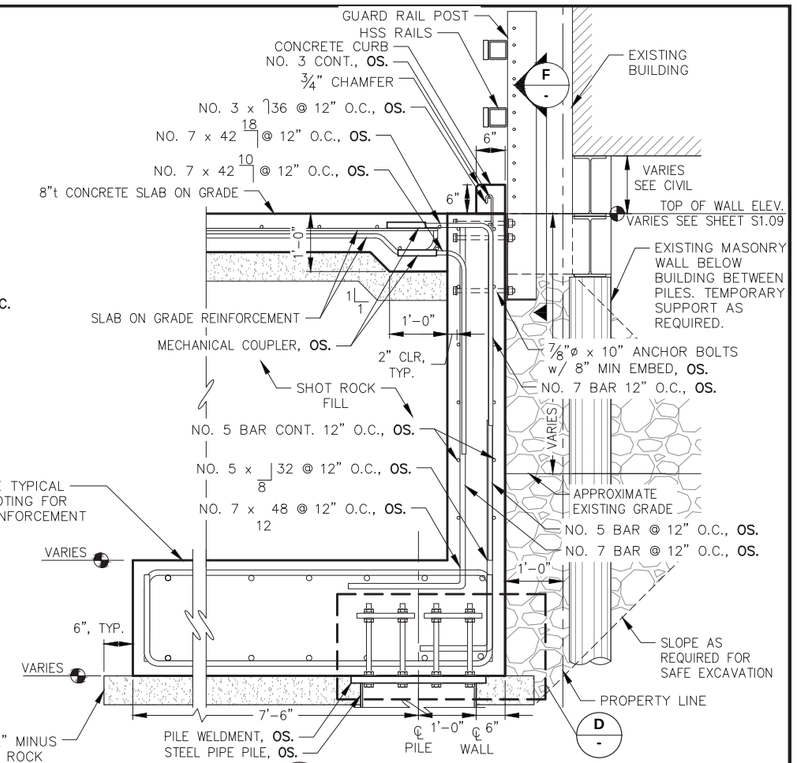

C S1.09 **CONCRETE WALL SECTION**

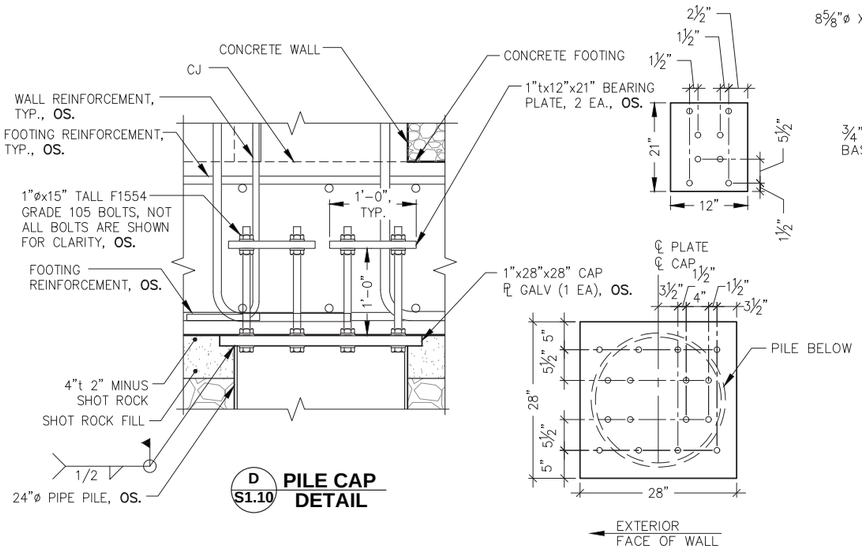

D S1.10 **PILE CAP DETAIL**

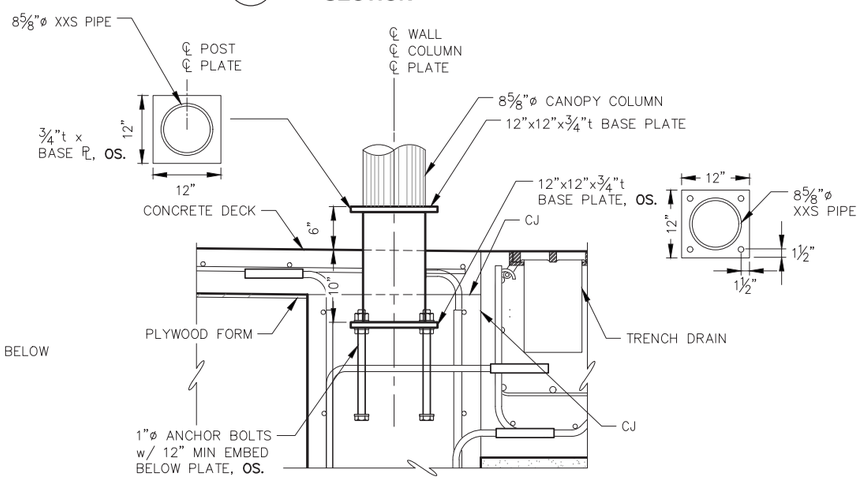

E S1.09 **CANOPY COLUMN BASE CONNECTION DETAIL** (1 EA REQ'D), OS.

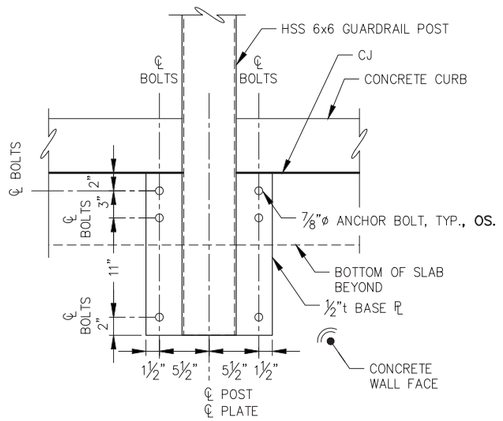

F - **VEHICLE RAIL POST CONNECTION DETAIL**

NOTE: OS. INDICATES OWNER SUPPLIED MATERIALS

REVISIONS

REV.	DATE	DESCRIPTION	DWN.	CKD.	APP.

P N D ENGINEERS, INC.
9360 Glacier Highway Ste 100
Juneau, Alaska 99801
Phone: 907-586-2093
Fax: 907-586-2099
www.pndengineers.com

DESIGN: MDS CHECKED: CRS
DRAWN: KLL APPROVED: CRS
SCALE: NTS

STATE OF ALASKA 49TH Charles R. Somerville CE-8845 REGISTERED PROFESSIONAL ENGINEER
DATE: 5/23/2019

DOWNTOWN WATERFRONT IMPROVEMENTS PHASE I
CBJ CONTRACT NO. DH19-014

SHEET TITLE: **CONCRETE RETAINING WALL SECTIONS AND DETAILS**

PND PROJECT NO.: 182045 C.A.N. NO.: AECC250

S1.11

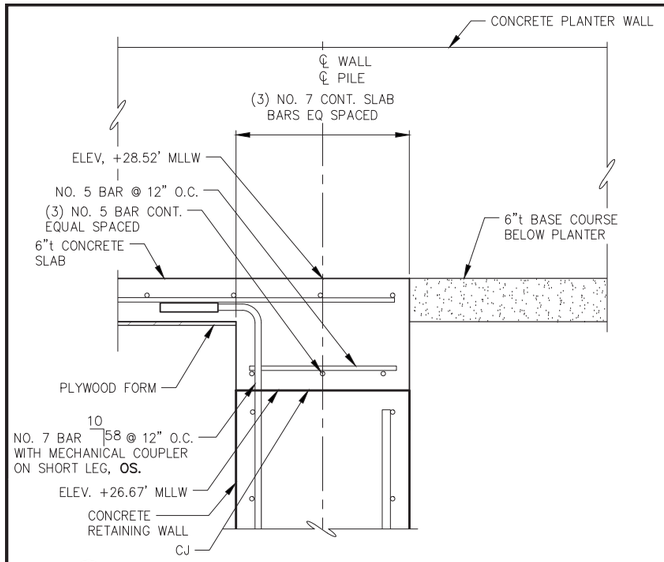

A / - TOP OF WALL CONCRETE DETAIL
STA. 2+57.70 TO STA. 2+62.16 END OF TRENCH DRAIN

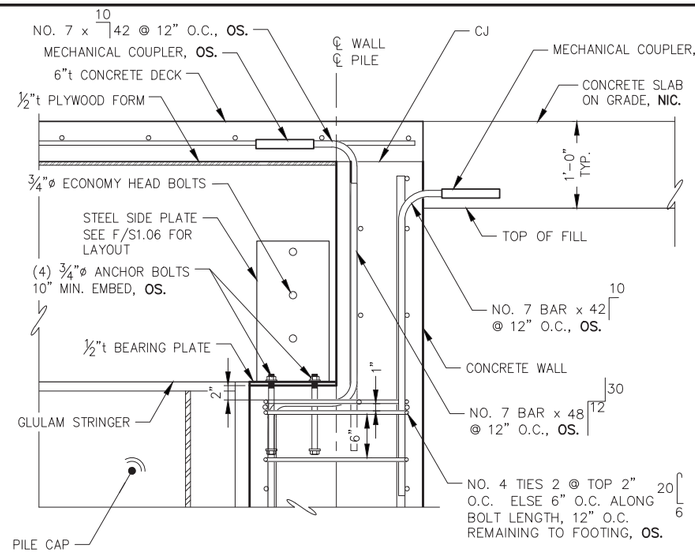

B / S1.10 TOP OF WALL DETAIL
CONCRETE DECK W/ BEAM SEAT

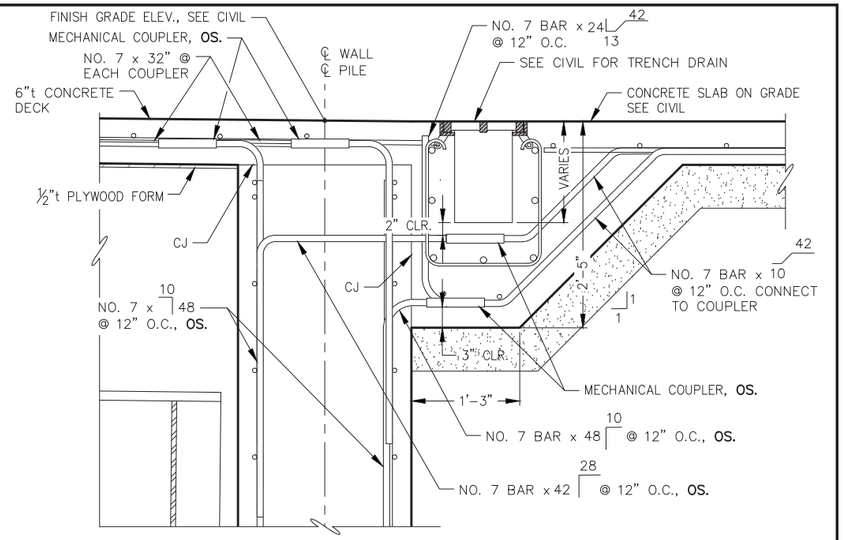

C / S1.11 TOP OF WALL DETAIL
CONCRETE DECK WITHOUT BEAM SEAT

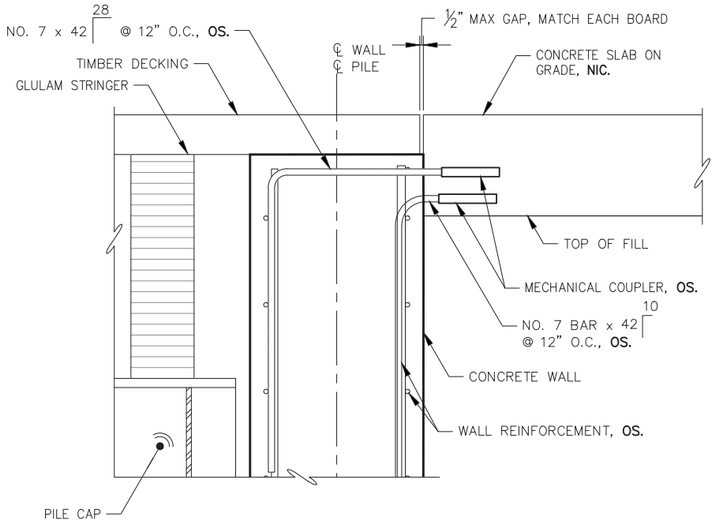

D / S1.10 TOP OF WALL DETAIL
TIMBER DECK WITHOUT BEAM SEAT

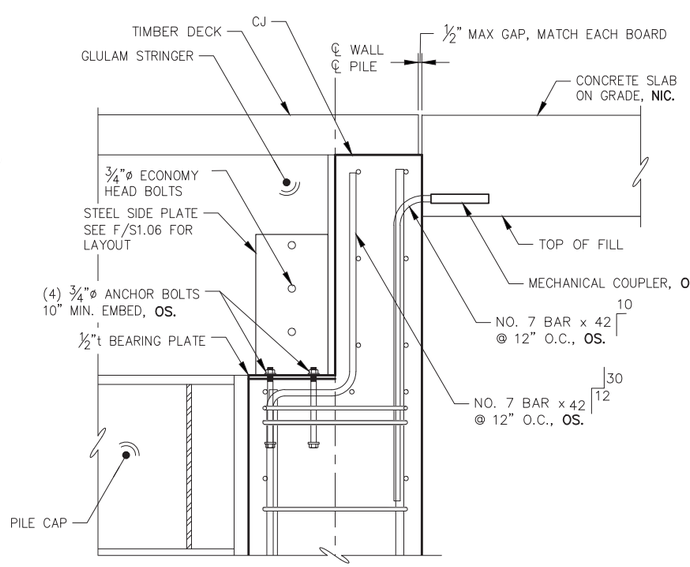

E / S1.10 TOP OF WALL DETAIL
TIMBER DECK WITH BEAM SEAT

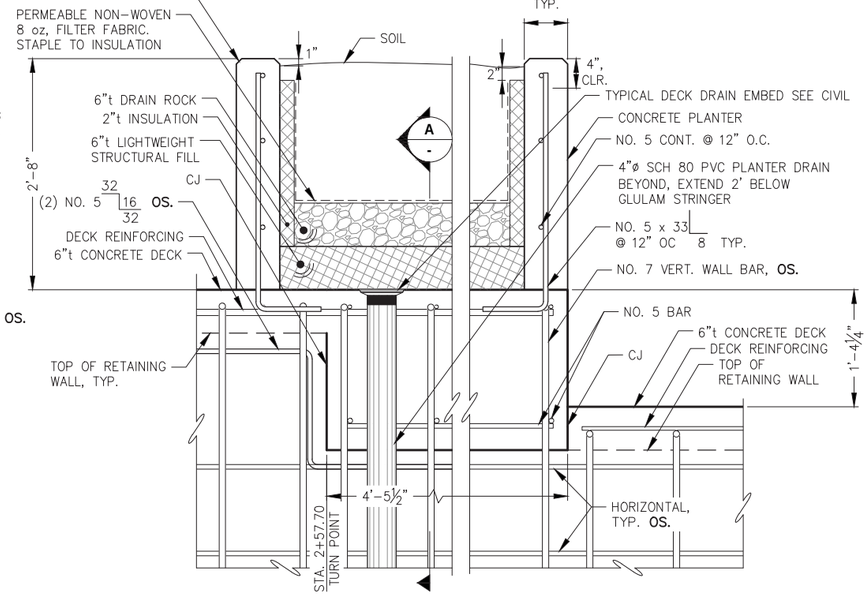

F / S1.09 TOP OF WALL STEP DETAIL
AND PLATER SECTION

NOTE: OS. INDICATES OWNER SUPPLIED MATERIALS

REVISIONS

REV.	DATE	DESCRIPTION	DWN.	CKD.	APP.

PND ENGINEERS, INC.
9360 Glacier Highway Ste 100
Juneau, Alaska 99801
Phone: 907-586-2093
Fax: 907-586-2099
www.pndengineers.com

STATE OF ALASKA 49 TH — Charles R. Somerville CE-8845 — REGISTERED PROFESSIONAL ENGINEER

DESIGN: MDS CHECKED: CRS
DRAWN: KLL APPROVED: CRS
SCALE: NTS
DATE: 5/23/2019

DOWNTOWN WATERFRONT IMPROVEMENTS PHASE I
CBJ CONTRACT NO. DH19-014

SHEET TITLE: **CONCRETE RETAINING WALL DETAILS**

PND PROJECT NO.: 182045 C.A.N. NO.: AECC250

S1.12

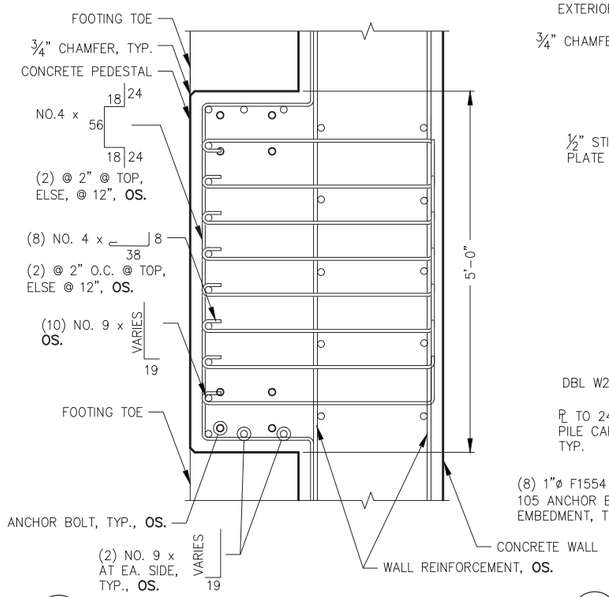

A **S1.10** **TYPICAL PILE CAP SUPPORT PEDESTAL**

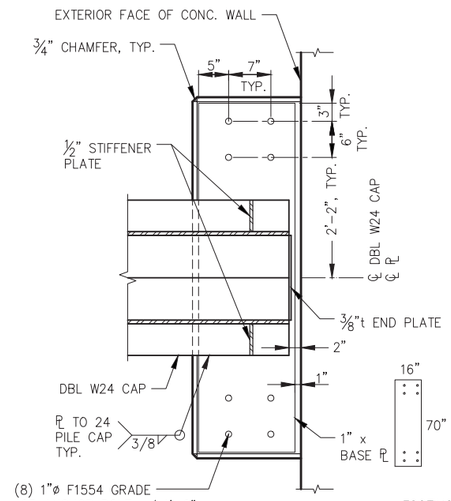

B **S1.09** **S1.10** **PILE CAP BASE PLATE**

NOTE: PILE CAP ANGLE TO ℄ OF PEDESTAL = ±2° FROM PERPENDICULAR TO THE PEDESTAL

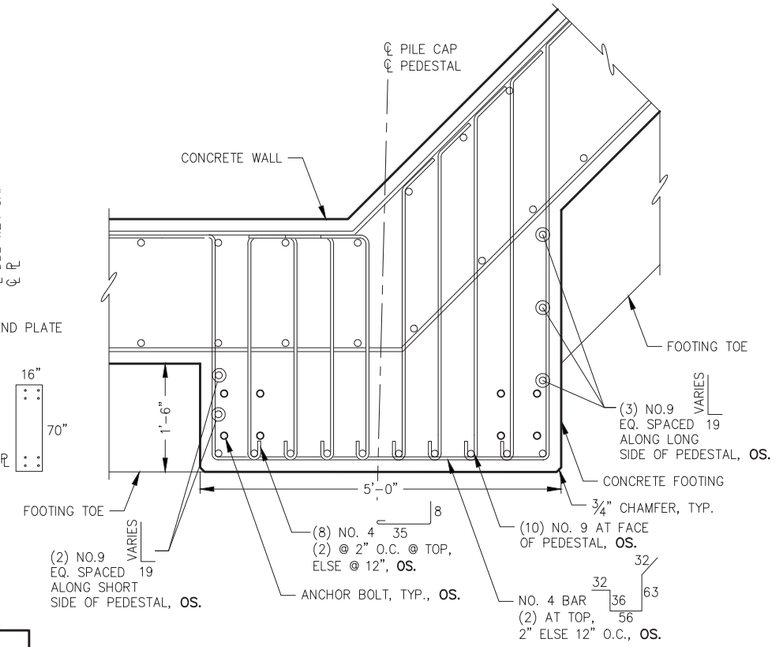

C **S1.09** **PILE CAP SUPPORT PEDESTAL AT WALL TURNING POINT**

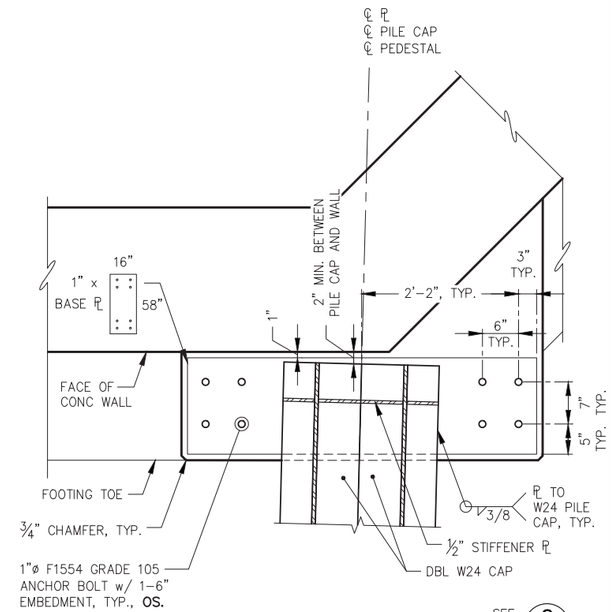

SEE C - FOR PEDESTAL REINFORCEMENT

D **S1.09** **PILE CAP BASE PLATE AT WALL TURNING POINT**

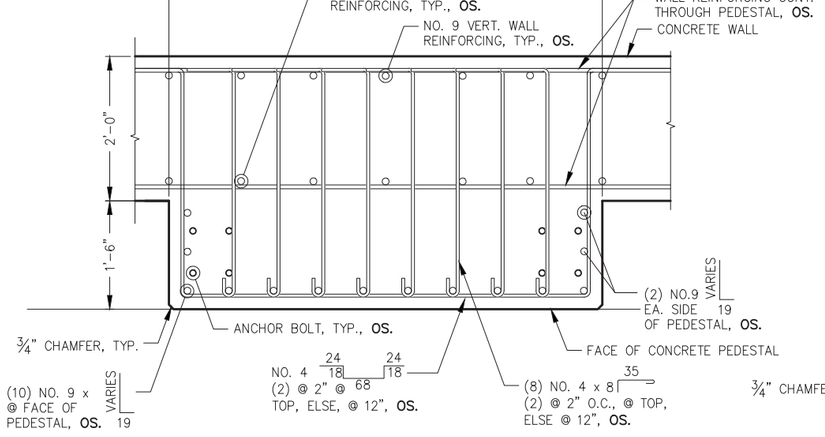

E **S1.10** **PILE CAP SUPPORT PEDESTAL AT ANGLED WALL**

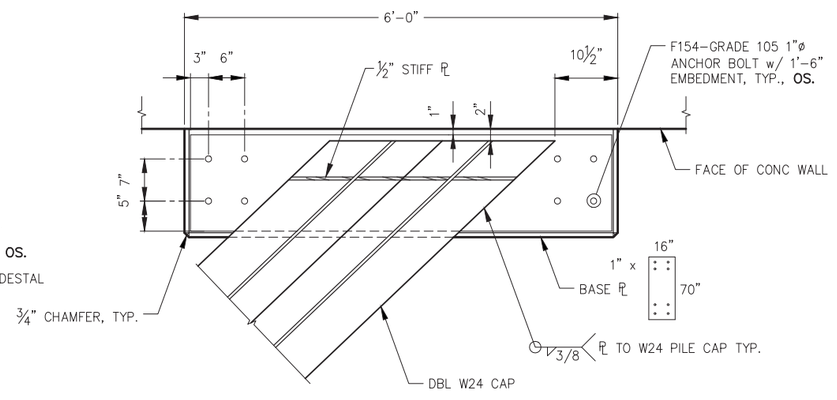

F **S1.09** **S1.10** **PILE CAP BASE PLATE**

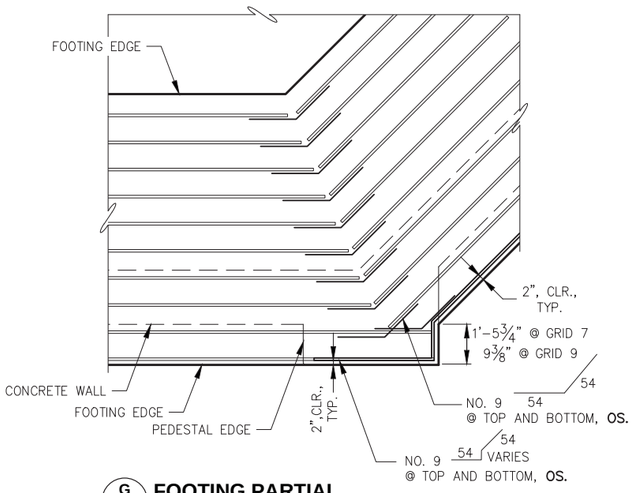

G **S1.09** **FOOTING PARTIAL PLAN AT ANGLE POINT PEDESTALS**

NOTE: OS. INDICATES OWNER SUPPLIED MATERIALS

CITY & BOROUGH OF JUNEAU DOCKS & HARBORS

REVISIONS

REV.	DATE	DESCRIPTION	DWN.	CKD.	APP.

P N D ENGINEERS, INC.
9360 Glacier Highway Ste 100
Juneau, Alaska 99801
Phone: 907-586-2093
Fax: 907-586-2099
www.pndengineers.com

DESIGN: MDS CHECKED: CRS
DRAWN: KLL APPROVED: CRS
SCALE: NTS

STATE OF ALASKA 49TH — Charles R. Somerville CE-8845 — REGISTERED PROFESSIONAL ENGINEER
DATE: 5/23/2019

DOWNTOWN WATERFRONT IMPROVEMENTS PHASE I
CBJ CONTRACT NO. DH19-014

SHEET TITLE: **CONCRETE RETAINING WALL PEDESTAL DETAILS**

S1.13

PND PROJECT NO.: 182045 C.A.N. NO.: AECC250

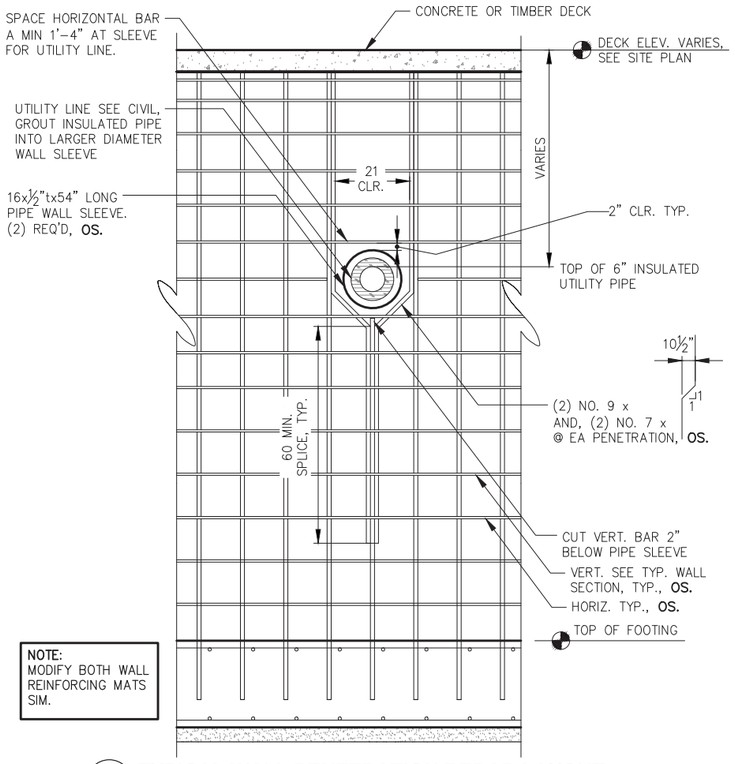

NOTE:
MODIFY BOTH WALL REINFORCING MATS SIM.

A - TYPICAL WALL PENETRATION REBAR LAYOUT FOR PENETRATIONS 16" DIA.

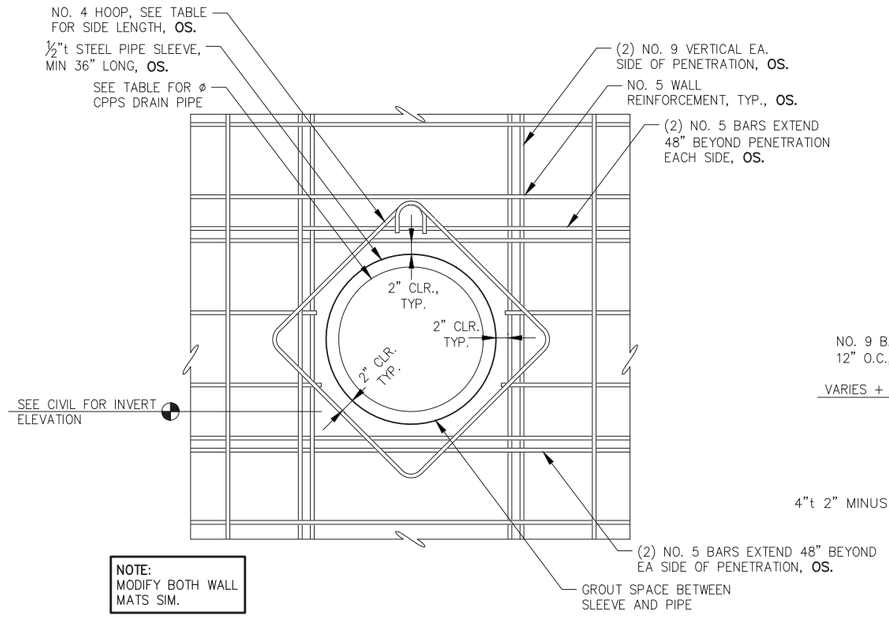

NOTE:
MODIFY BOTH WALL MATS SIM.

B - TYPICAL WALL PENETRATION REBAR LAYOUT FOR PENETRATIONS GREATER THAN 16" DIA

NOTE:

PIPE Ø	PIPE OD	SLEEVE OD	HOOP DIAMETER	QUANTITY REQ'D
24"	28.2"	30"	34"x34"	1
18"	21.8"	24"	28"x28"	1

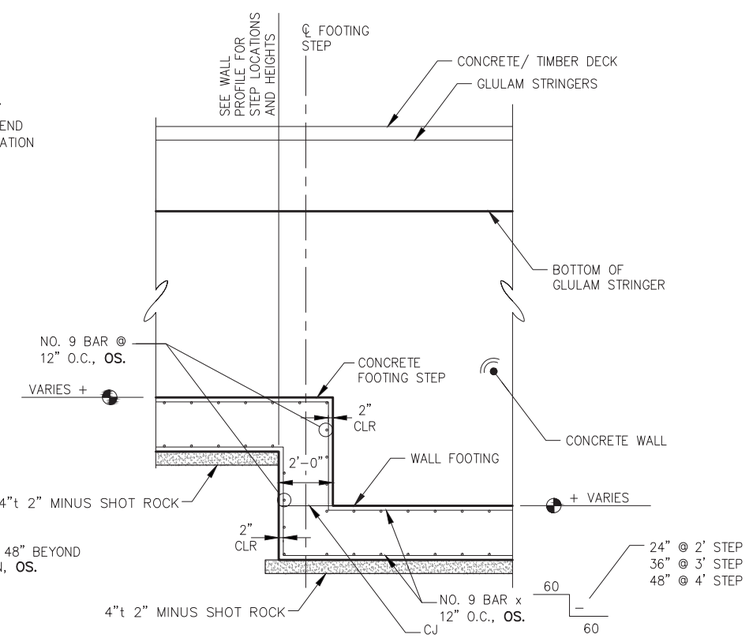

C S1.09 TYPICAL FOOTING STEP

NOTE:
1. COORDINATE w/ ELECTRICAL FOR CONDUIT PENETRATIONS.
2. SLEEVE ELECTRICAL CONDUITS w/ 4"ø PVC SCHEDULE 40 PIPE. ANGLE PIPE THOUGH WALL TO MATCH CONDUIT ANGLE. MAINTAIN A MINIMUM OF 1.5" OF CONCRETE COVER BETWEEN SLEEVE AND REINFORCEMENT.

NOTE: OS. INDICATES OWNER SUPPLIED MATERIALS

CITY & BOROUGH OF JUNEAU — DOCKS & HARBORS

REVISIONS

REV.	DATE	DESCRIPTION	DWN.	CKD.	APP.

PND ENGINEERS, INC.
9360 Glacier Highway Ste 100
Juneau, Alaska 99801
Phone: 907-586-2093
Fax: 907-586-2099
www.pndengineers.com

DESIGN: MDS CHECKED: CRS
DRAWN: KLL APPROVED: CRS
SCALE: NTS
DATE: 5/23/2019

STATE OF ALASKA 49TH — Charles R. Somerville CE-8845 — REGISTERED PROFESSIONAL ENGINEER

DOWNTOWN WATERFRONT IMPROVEMENTS PHASE I
CBJ CONTRACT NO. DH19-014

SHEET TITLE: **CONCRETE RETAINING WALL DETAILS**

PND PROJECT NO.: 182045 C.A.N. NO.: AECC250

S1.14

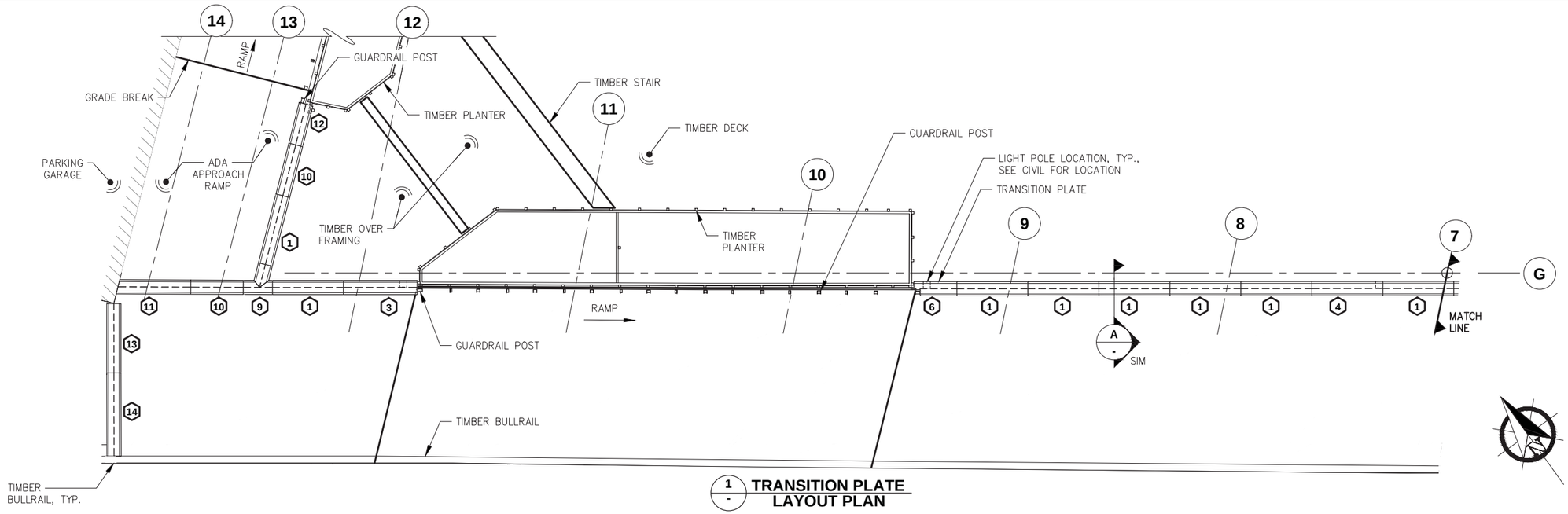

1 - **TRANSITION PLATE LAYOUT PLAN**

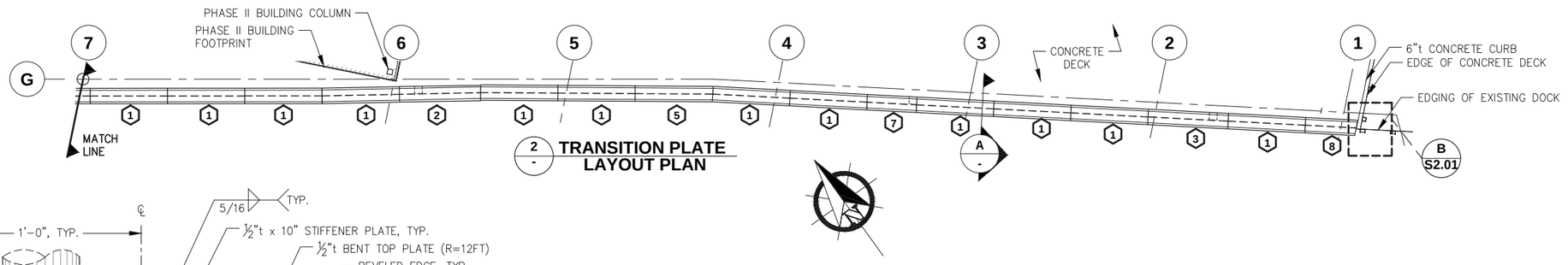

2 - **TRANSITION PLATE LAYOUT PLAN**

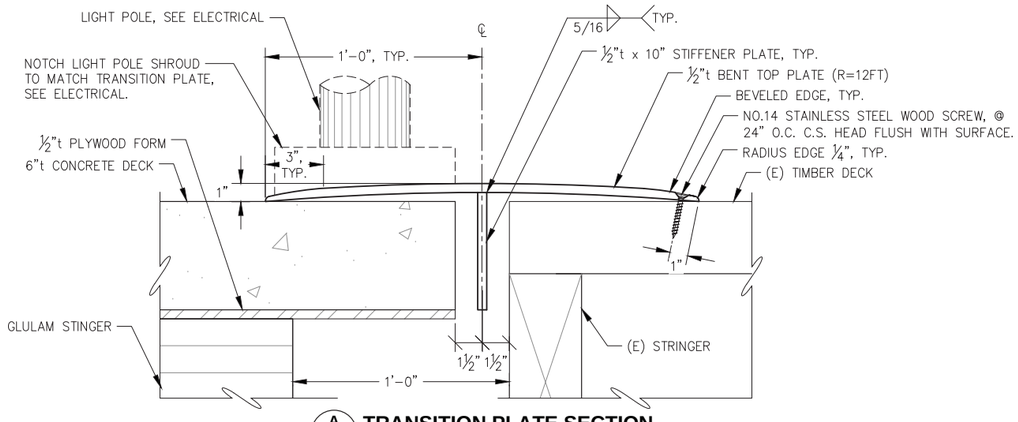

A - **TRANSITION PLATE SECTION**
NTS

NOTE:
1. # INDICATES PLATE DESIGNATION
2. PLATE EDGES ARE 90° UNLESS NOTED OTHERWISE
3. FIELD MEASURE ALL FINAL NOTCH LOCATIONS PRIOR TO FABRICATION.

CITY & BOROUGH OF JUNEAU — DOCKS & HARBORS

REVISIONS

REV.	DATE	DESCRIPTION	DWN.	CKD.	APP.

PND ENGINEERS, INC.
9360 Glacier Highway Ste 100
Juneau, Alaska 99801
Phone: 907-586-2093
Fax: 907-586-2099
www.pndengineers.com

DESIGN: MDS CHECKED: CRS
DRAWN: KLL APPROVED: CRS
SCALE: SCALE IN FEET 0 8 16 FT.

STATE OF ALASKA 49TH — Charles R. Somerville CE-8845 — REGISTERED PROFESSIONAL ENGINEER
DATE: 5/23/2019

DOWNTOWN WATERFRONT IMPROVEMENTS PHASE I
CBJ CONTRACT NO. DH19-014

SHEET TITLE: **TRANSITION PLATE PARTIAL PLAN AND SECTION**

S1.15

PND PROJECT NO.: 182045 C.A.N. NO.: AECC250

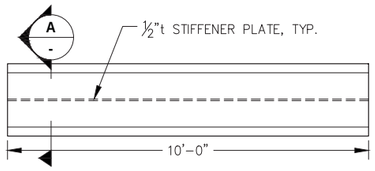

TRANSITION PLATE PLAN TYPE 1
NTS

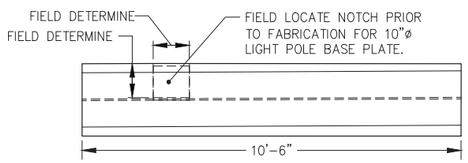

TRANSITION PLATE PLAN TYPE 2
NTS

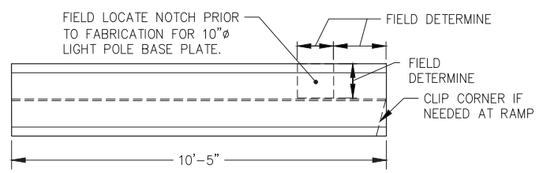

TRANSITION PLATE PLAN TYPE 3
NTS

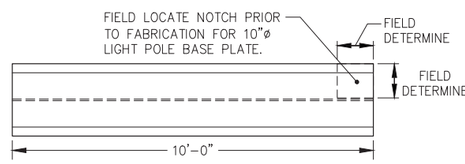

TRANSITION PLATE PLAN TYPE 4
NTS

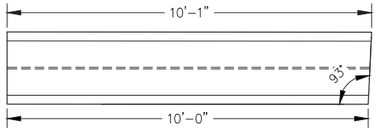

TRANSITION PLATE PLAN TYPE 5
NTS

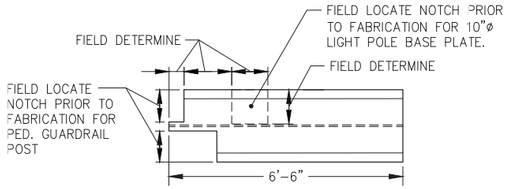

TRANSITION PLATE PLAN TYPE 6
NTS

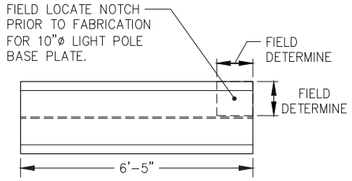

TRANSITION PLATE PLAN TYPE 7
NTS

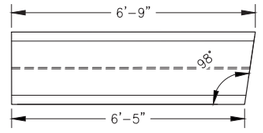

TRANSITION PLATE PLAN TYPE 8
NTS

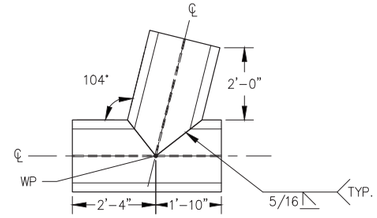

TRANSITION PLATE PLAN TYPE 9
NTS

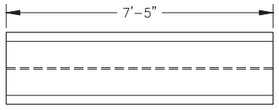

TRANSITION PLATE PLAN TYPE 10

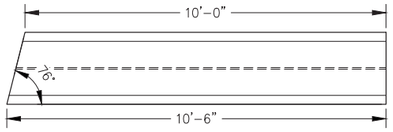

TRANSITION PLATE PLAN TYPE 11
NTS

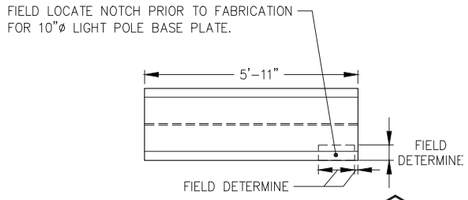

TRANSITION PLATE PLAN TYPE 12
NTS

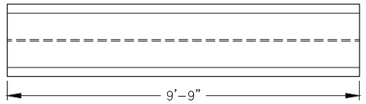

TRANSITION PLATE PLAN TYPE 13
NTS

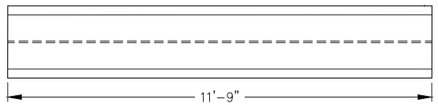

TRANSITION PLATE PLAN TYPE 14
NTS

REVISIONS

REV.	DATE	DESCRIPTION	DWN.	CKD.	APP.

P N D ENGINEERS, INC.
9360 Glacier Highway Ste 100
Juneau, Alaska 99801
Phone: 907-586-2093
Fax: 907-586-2099
www.pndengineers.com

DESIGN: MDS CHECKED: CRS
DRAWN: KLL APPROVED: CRS
SCALE: NTS
DATE: 5/23/2019

STATE OF ALASKA 49TH
Charles R. Somerville
CE-8845
REGISTERED PROFESSIONAL ENGINEER

DOWNTOWN WATERFRONT IMPROVEMENTS PHASE I
CBJ CONTRACT NO. DH19-014

SHEET TITLE:
TRANSITION PLATE LAYOUT

PND PROJECT NO.: 182045 C.A.N. NO.: AECC250

S1.16

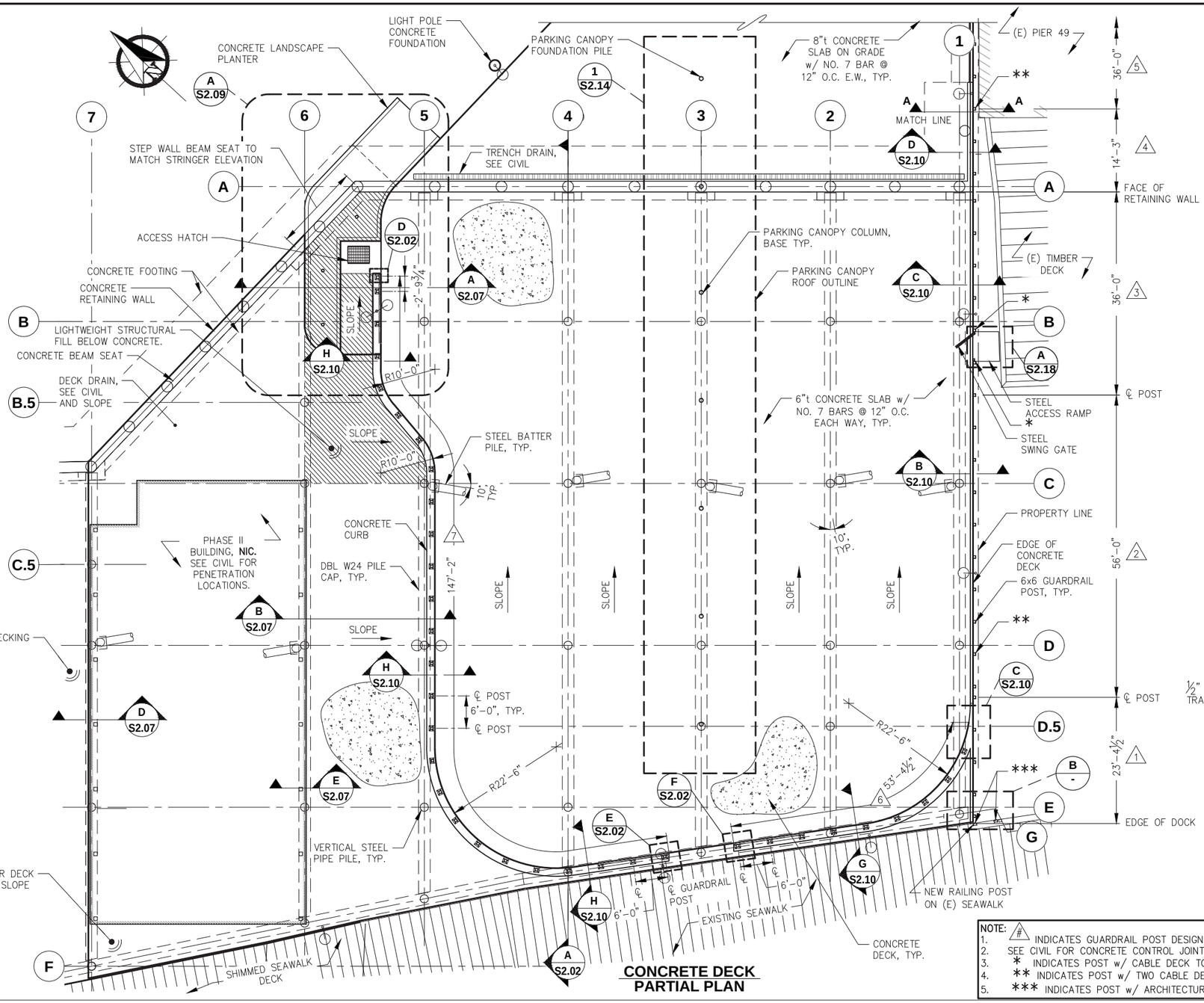

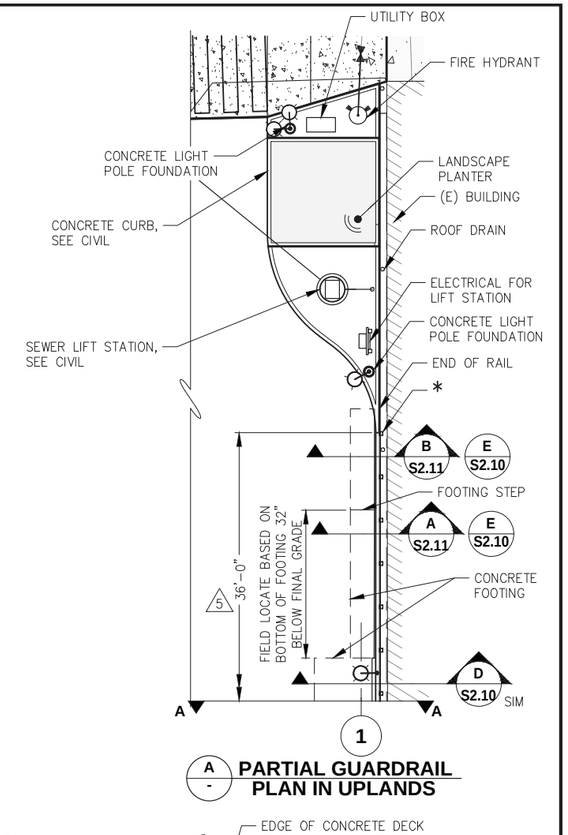

PARTIAL GUARDRAIL PLAN IN UPLANDS

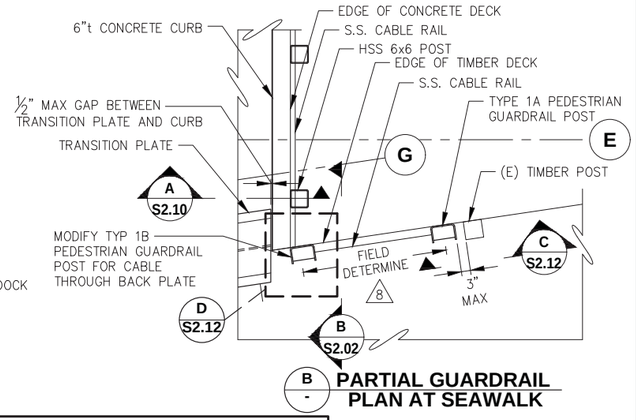

PARTIAL GUARDRAIL PLAN AT SEAWALK

NOTE:
1. # INDICATES GUARDRAIL POST DESIGNATIONS
2. SEE CIVIL FOR CONCRETE CONTROL JOINT PATTERN AND GRADES
3. * INDICATES POST w/ CABLE DECK TOGGLE TERMINATIONS.
4. ** INDICATES POST w/ TWO CABLE DECK TOGGLE TERMINATIONS OR TURNBUCKLES
5. *** INDICATES POST w/ ARCHITECTURAL TERMINATIONS/TURNBUCKLES.

REVISIONS

REV.	DATE	DESCRIPTION	DWN.	CKD.	APP.

PND ENGINEERS, INC.
9360 Glacier Highway Ste 100
Juneau, Alaska 99801
Phone: 907-586-2093
Fax: 907-586-2099
www.pndengineers.com

DESIGN: MDS CHECKED: CRS
DRAWN: KLL APPROVED: CRS
SCALE: SCALE IN FEET 0 10 20 FT.

STATE OF ALASKA 49TH Charles R. Somerville CE-8845 REGISTERED PROFESSIONAL ENGINEER
DATE: 5/23/2019

DOWNTOWN WATERFRONT IMPROVEMENTS PHASE I
CBJ CONTRACT NO. DH19-014

SHEET TITLE: **CONCRETE DECK PARTIAL PLAN**

PND PROJECT NO.: 182045 C.A.N. NO.: AECC250

S2.01

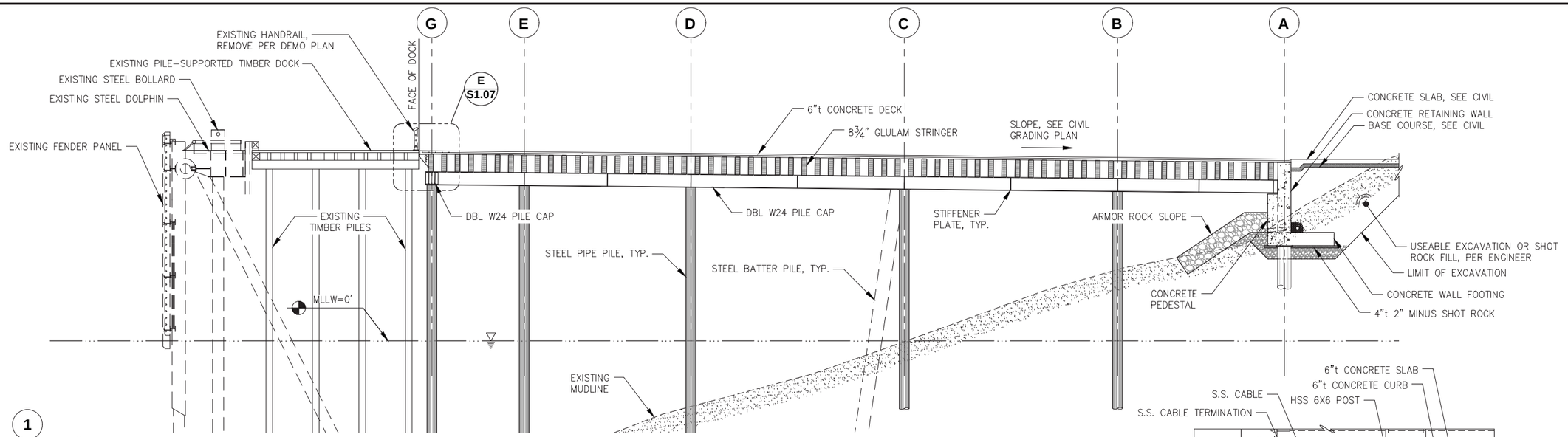

A S2.01 CONCRETE DECK ELEVATION

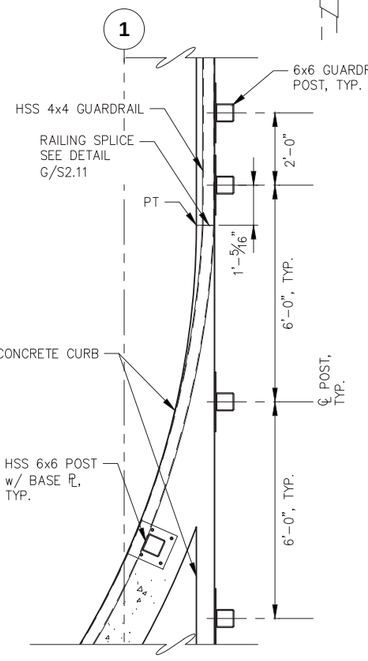

C S2.01 TYPICAL END OF CURB GUARDRAIL POST DETAIL

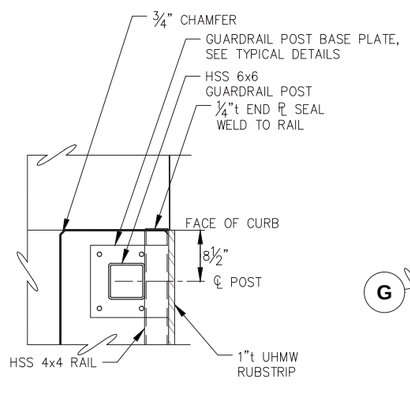

D S2.01 TYPICAL END OF CURB GUARDRAIL POST DETAIL

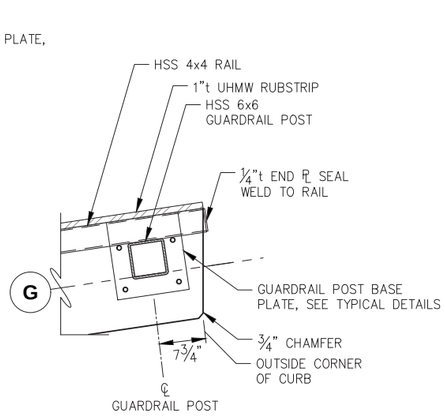

E S2.01 TYPICAL END OF CURB GUARDRAIL POST DETAIL

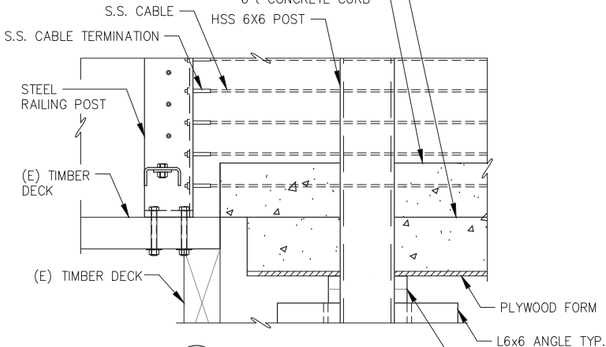

B S2.01 CURB AT EXISTING SEAWALK

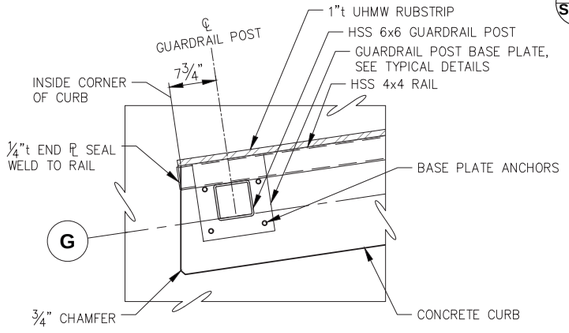

F S2.01 TYPICAL END OF CURB GUARDRAIL POST DETAIL

NOTE:
1. RUBSTRIP NOT SHOWN FOR CLARITY

REVISIONS

REV.	DATE	DESCRIPTION	DWN.	CKD.	APP.

P N D ENGINEERS, INC.
9360 Glacier Highway Ste 100
Juneau, Alaska 99801
Phone: 907-586-2093
Fax: 907-586-2099
www.pndengineers.com

DESIGN: MDS CHECKED: CRS
DRAWN: KLL APPROVED: CRS
SCALE: SCALE IN FEET 0 10 20 FT.

STATE OF ALASKA 49TH Charles R. Somerville CE-8845 REGISTERED PROFESSIONAL ENGINEER
DATE: 5/23/2019

DOWNTOWN WATERFRONT IMPROVEMENTS PHASE I
CBJ CONTRACT NO. DH19-014

SHEET TITLE: **CONCRETE DECK ELEVATION AND SECTION**

S2.02

PND PROJECT NO.: 182045 C.A.N. NO.: AECC250

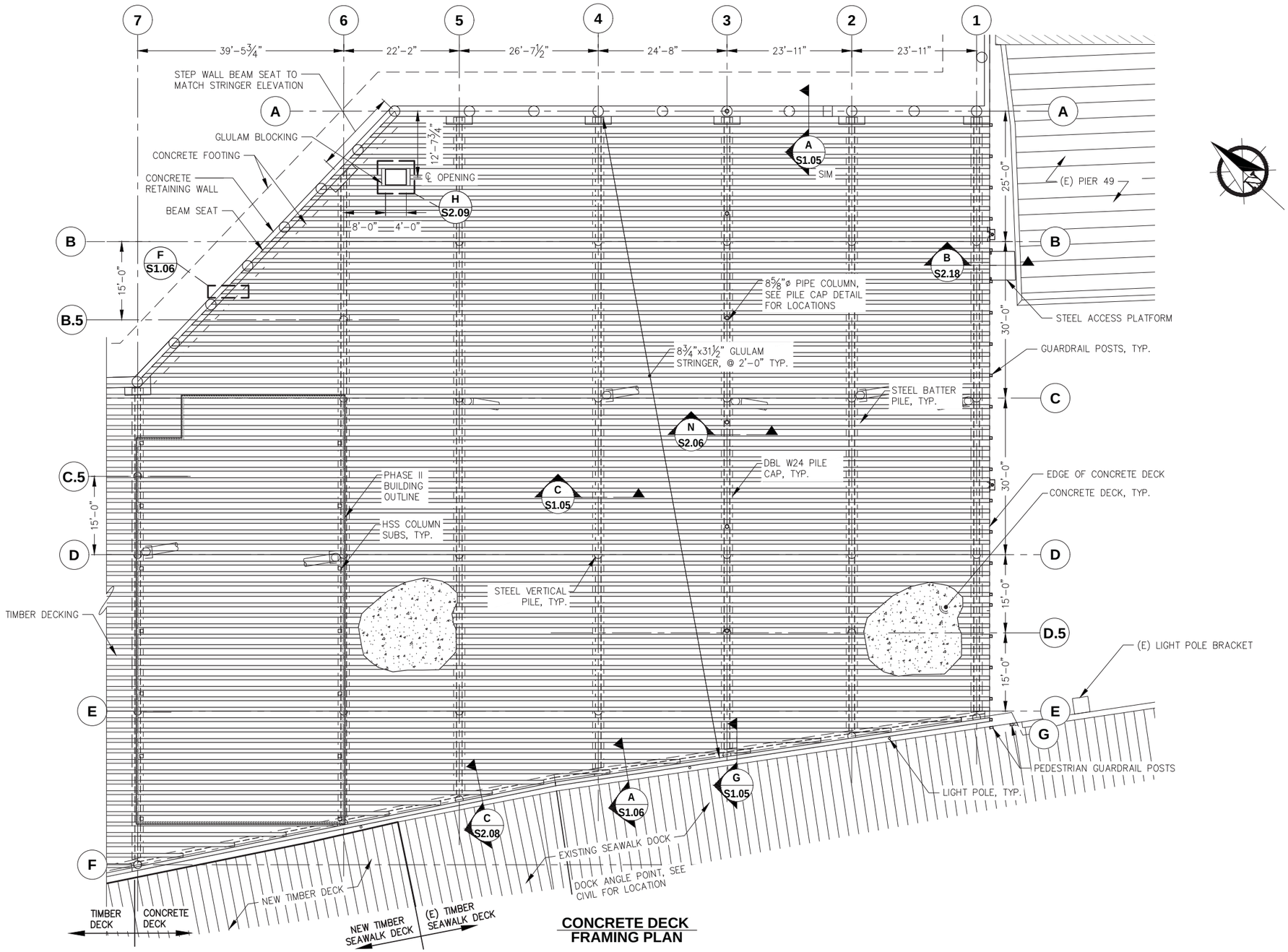

CONCRETE DECK FRAMING PLAN

REVISIONS

REV.	DATE	DESCRIPTION	DWN.	CKD.	APP.

P N D ENGINEERS, INC.
9360 Glacier Highway Ste 100
Juneau, Alaska 99801
Phone: 907-586-2093
Fax: 907-586-2099
www.pndengineers.com

DESIGN: MDS CHECKED: CRS
DRAWN: KLL APPROVED: CRS
SCALE: SCALE IN FEET 0 10 20 FT.
DATE: 5/23/2019

STATE OF ALASKA 49TH — Charles R. Somerville CE-8845 — REGISTERED PROFESSIONAL ENGINEER

DOWNTOWN WATERFRONT IMPROVEMENTS PHASE I
CBJ CONTRACT NO. DH19-014

SHEET TITLE: **CONCRETE DECK FRAMING PLAN**

S2.03

PND PROJECT NO.: 182045 C.A.N. NO.: AECC250

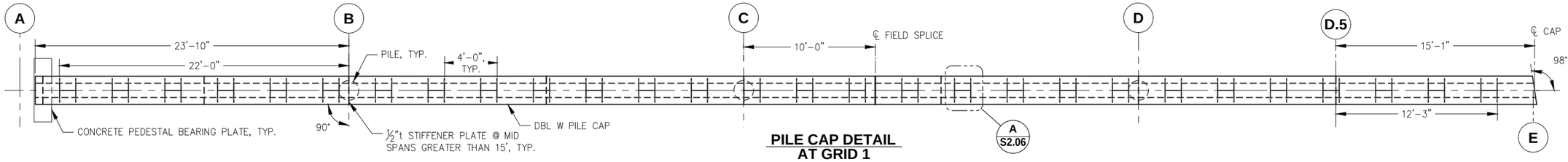

PILE CAP DETAIL AT GRID 1

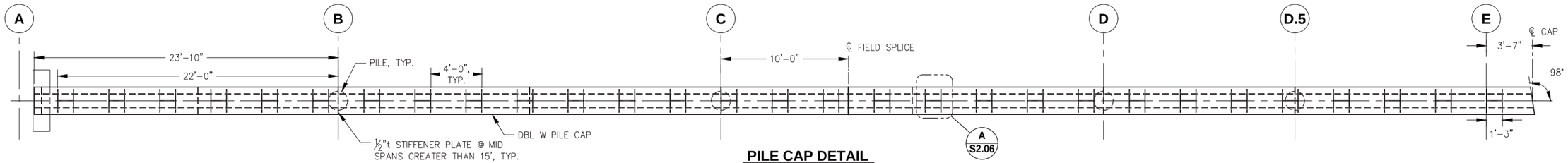

PILE CAP DETAIL AT GRID 2

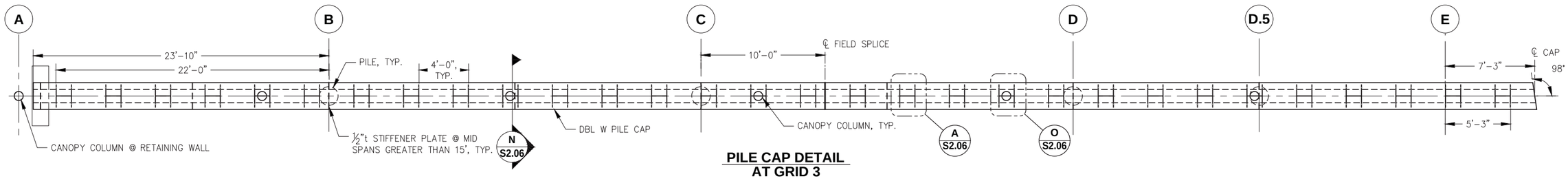

PILE CAP DETAIL AT GRID 3

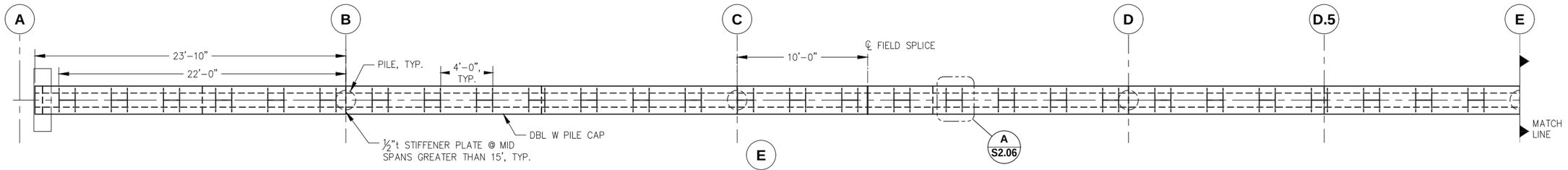

PILE CAP DETAIL AT GRID 4

NOTE:
1. SHOP SPLICE AS REQUIRED FOR SECTIONS TO FIT IN GALVANIZING TANKS.
2. ALL PLATE DIMENSIONS ARE TO THE OUTSIDE OF SIDE PLATE, UNLESS NOTED OTHERWISE
3. ALL PILE CAPS ARE DBL W24x131, UNLESS OTHERWISE NOTED
4. ONE STIFFENER PLATE SHALL BE LOCATED AT ℄ EACH PILE, AND ONE PLATE AT MIDSPAN BETWEEN PILES AT PILE SPACING GREATER THAN 15' O.C.

CITY & BOROUGH OF JUNEAU — DOCKS & HARBORS

REVISIONS

REV.	DATE	DESCRIPTION	DWN.	CKD.	APP.

PND ENGINEERS, INC.
9360 Glacier Highway Ste 100
Juneau, Alaska 99801
Phone: 907-586-2093
Fax: 907-586-2099
www.pndengineers.com

DESIGN: MDS CHECKED: CRS
DRAWN: KLL APPROVED: CRS
SCALE: SCALE IN FEET 0 10 20 FT.

STATE OF ALASKA 49TH — Charles R. Somerville CE-8845 REGISTERED PROFESSIONAL ENGINEER
DATE: 5/23/2019

DOWNTOWN WATERFRONT IMPROVEMENTS PHASE I
CBJ CONTRACT NO. DH19-014

SHEET TITLE: **PILE CAP PLAN**

PND PROJECT NO.: 182045 C.A.N. NO.: AECC250

S2.04

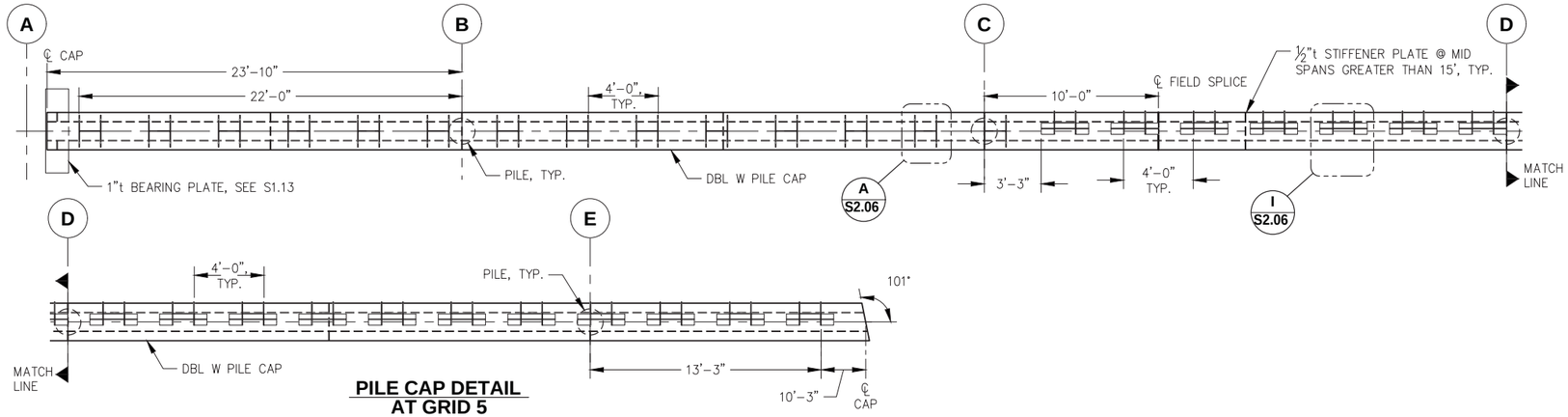

PILE CAP DETAIL AT GRID 5

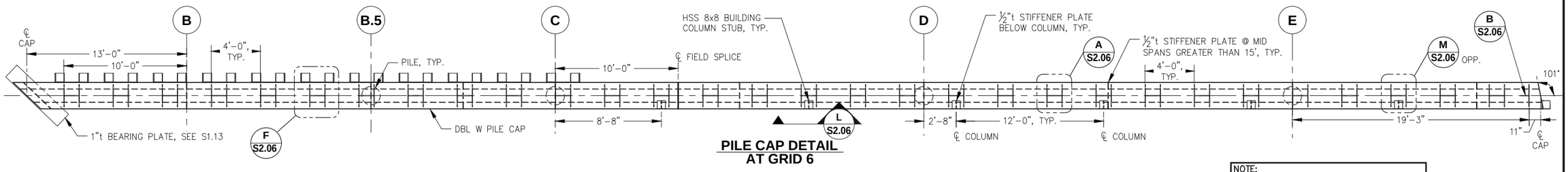

PILE CAP DETAIL AT GRID 6

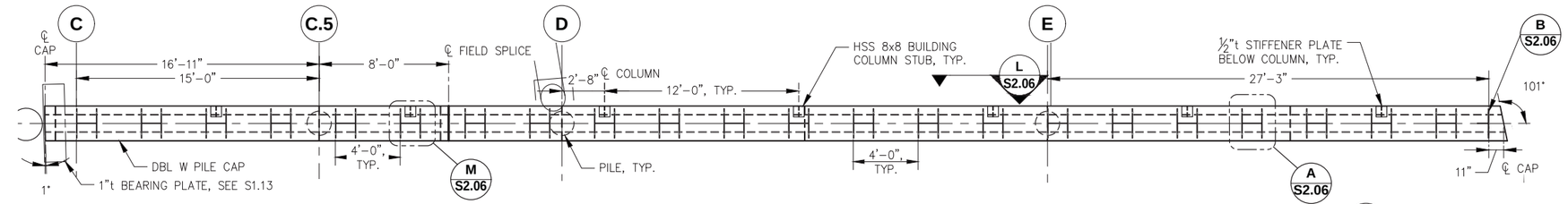

PILE CAP DETAIL AT GRID 7

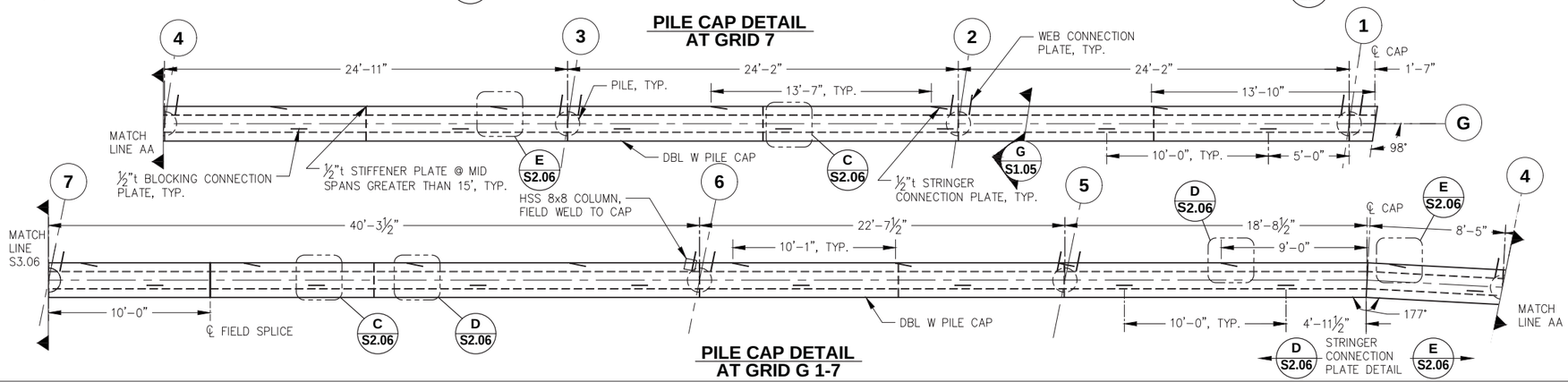

PILE CAP DETAIL AT GRID G 1-7

NOTE:
1. GRID 6 AND 7 PILE CAPS SHALL BE ALIGNED SO THE ℄ OF EACH COLUMN POSTS SHALL BE ALIGNED HORIZONTALLY WITHIN ± 1/16"

NOTE:
1. SHOP SPLICE AS REQUIRED FOR SECTIONS TO FIT IN GALVANIZING TANKS.
2. ALL PLATE DIMENSIONS ARE TO THE OUTSIDE OF SIDE PLATE, UNLESS NOTED OTHERWISE
3. ALL PILE CAPS ARE DBL W24x131, UNLESS OTHERWISE NOTED
4. ONE STIFFENER PLATE SHALL BE LOCATED AT ℄ EACH PILE, AND ONE PLATE AT MIDSPAN BETWEEN PILES AT PILE SPACING GREATER THAN 15' O.C.

CITY & BOROUGH OF JUNEAU — DOCKS & HARBORS

REVISIONS

REV.	DATE	DESCRIPTION	DWN.	CKD.	APP.

PND ENGINEERS, INC.
9360 Glacier Highway Ste 100
Juneau, Alaska 99801
Phone: 907-586-2093
Fax: 907-586-2099
www.pndengineers.com

DESIGN: MDS CHECKED: CRS
DRAWN: KLL APPROVED: CRS
SCALE: SCALE IN FEET 0 4 8 FT.

STATE OF ALASKA 49 TH — Charles R. Somerville CE-8845 — REGISTERED PROFESSIONAL ENGINEER
DATE: 5/23/2019

DOWNTOWN WATERFRONT IMPROVEMENTS PHASE I
CBJ CONTRACT NO. DH19-014

SHEET TITLE: **PILE CAP PLAN**

S2.05

PND PROJECT NO.: 182045 C.A.N. NO.: AECC250

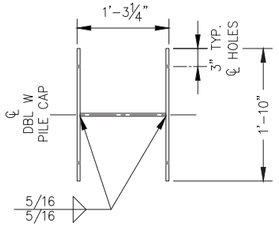

A - STRINGER CONNECTION WELDMENT

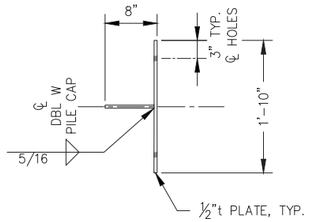

B - STRINGER CONNECTION WELDMENT

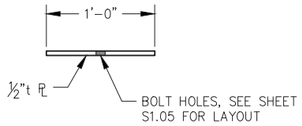

C - STRINGER CONNECTION WELDMENT

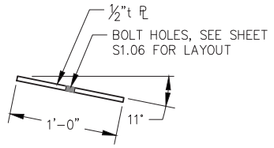

D - TYPICAL ANGLED STRINGER CONNECTION PLATE

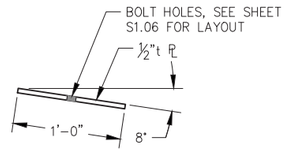

E - TYPICAL ANGLED STRINGER CONNECTION PLATE

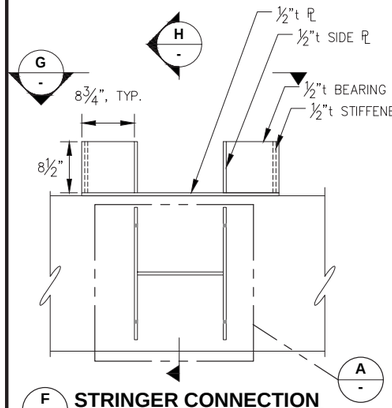

F - STRINGER CONNECTION WELDMENT

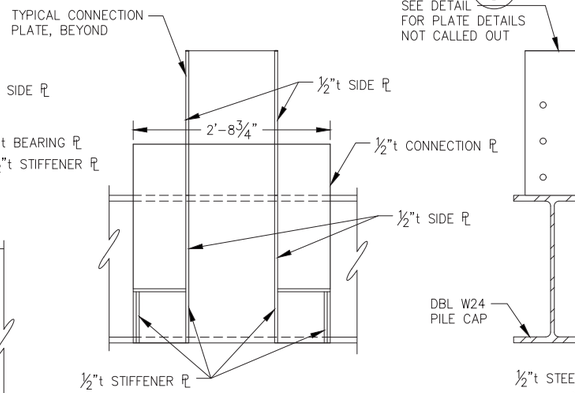

G - TYPE F ELEVATION

NOTE: BOLT HOLES NOT SHOWN FOR CLARITY

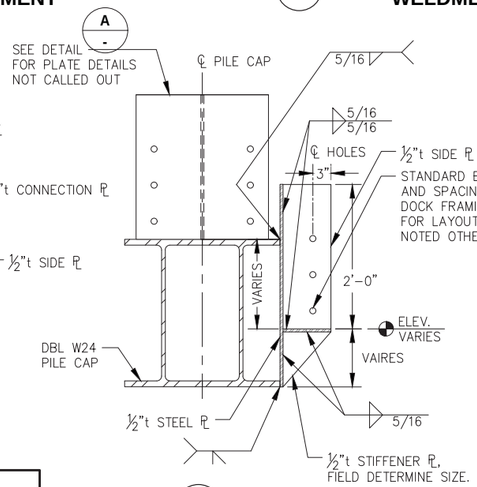

H - TYPE F SECTION

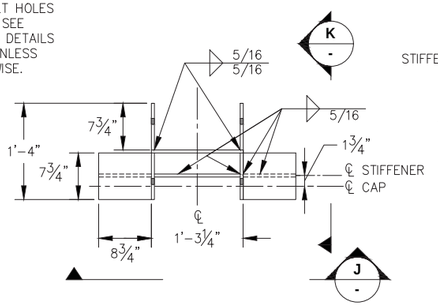

I - STRINGER CONNECTION WELDMENT

NOTE: ALL ℄ ARE ½"t STEEL

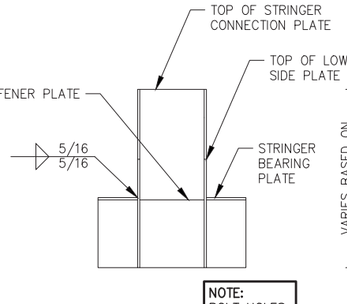

J - STRINGER CONNECTION ELEVATION

NOTE: BOLT HOLES NOT SHOWN FOR CLARITY

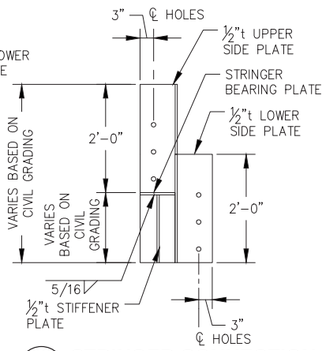

K - STRINGER CONNECTION SECTION

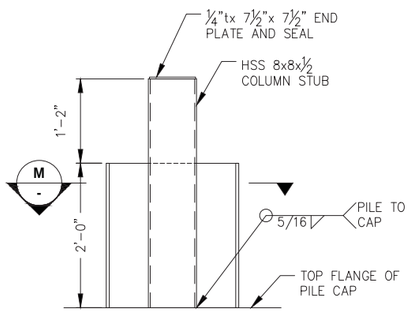

L - TYPICAL BUILDING COLUMN STUB DETAIL

NOTE: BOLT HOLES NOT SHOWN FOR CLARITY

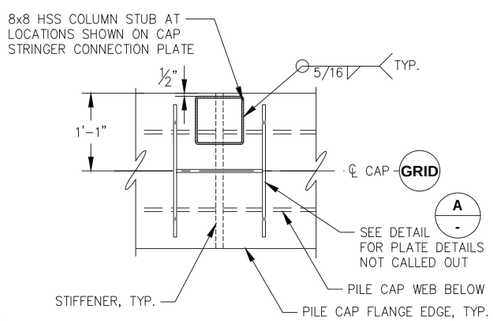

M - TYPICAL BUILDING COLUMN STUB CONNECTION DETAIL

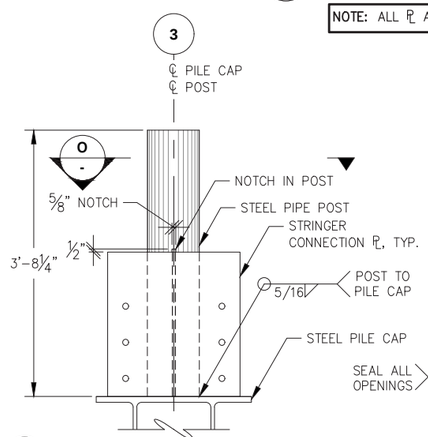

N - TYPICAL PARKING CANOPY CONNECTION DETAIL

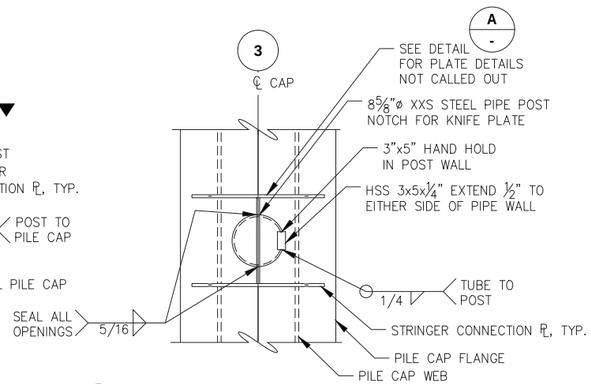

O - TYPICAL PRE-ENGINEERED CANOPY CONNECTION DETAIL

REVISIONS

REV.	DATE	DESCRIPTION	DWN.	CKD.	APP.

P N D ENGINEERS, INC.
9360 Glacier Highway Ste 100
Juneau, Alaska 99801
Phone: 907-586-2093
Fax: 907-586-2099
www.pndengineers.com

DESIGN: MDS CHECKED: CRS
DRAWN: KLL APPROVED: CRS
SCALE: SCALE IN FEET 0 10 20 FT.
DATE: 5/23/2019

STATE OF ALASKA 49TH Charles R. Somerville CE-8845 REGISTERED PROFESSIONAL ENGINEER

DOWNTOWN WATERFRONT IMPROVEMENTS PHASE I
CBJ CONTRACT NO. DH19-014

SHEET TITLE: **PILE CAP PLAN**

S2.06

PND PROJECT NO.: 182045 C.A.N. NO.: AECC250

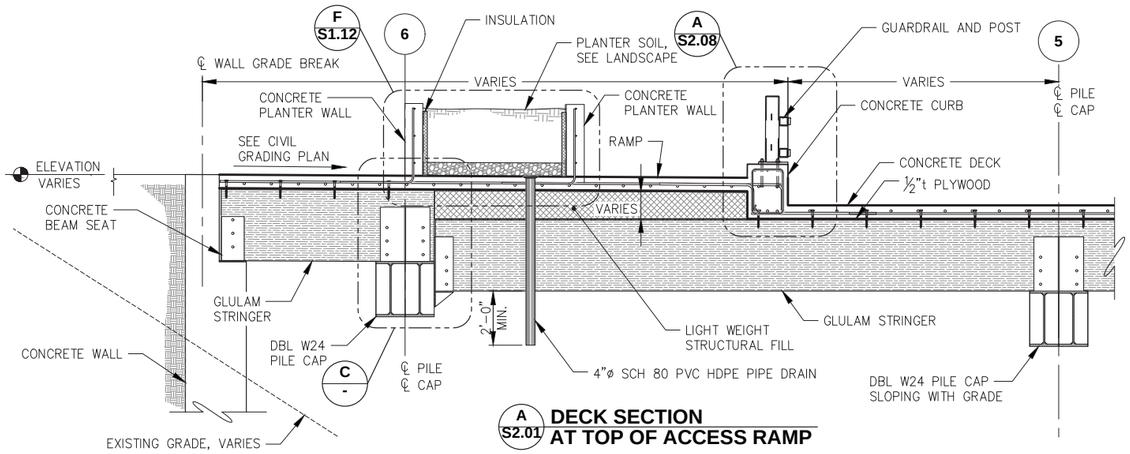

A S2.01 DECK SECTION AT TOP OF ACCESS RAMP

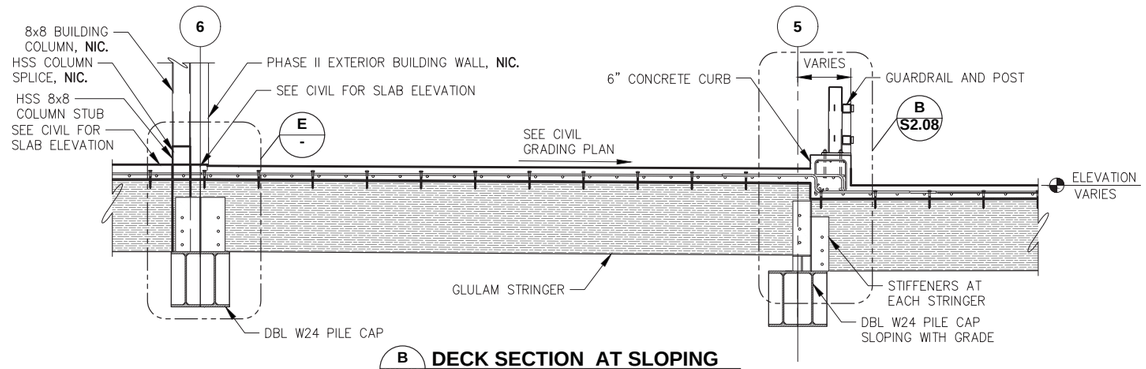

B S2.01 DECK SECTION AT SLOPING PILE CAP TRANISION

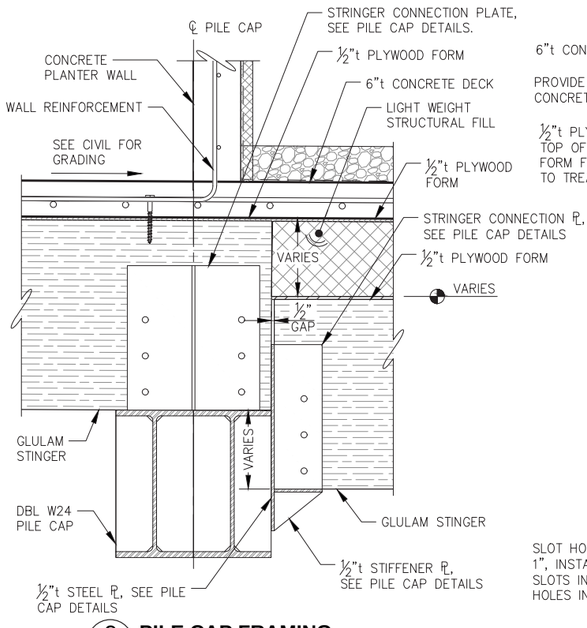

C - PILE CAP FRAMING DETAIL

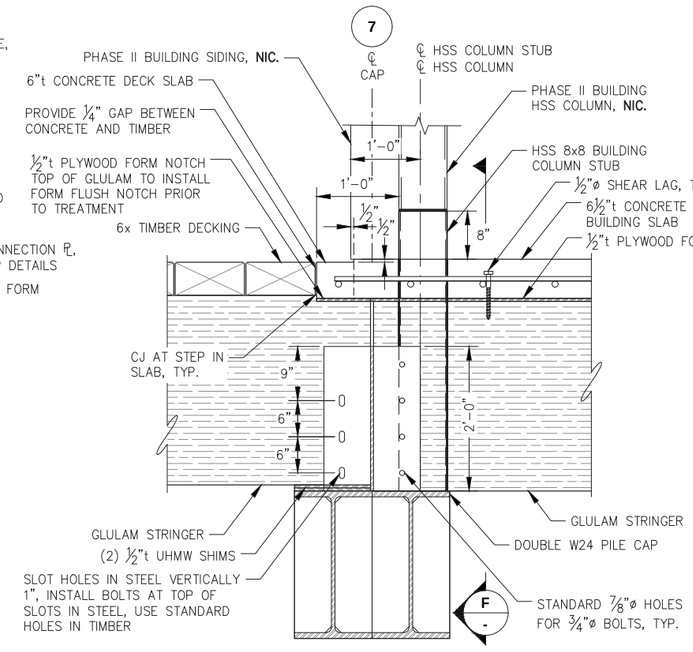

D S2.01 TIMBER TO CONCRETE JOINT DETAIL AT PHASE II BUILDING EXTERIOR

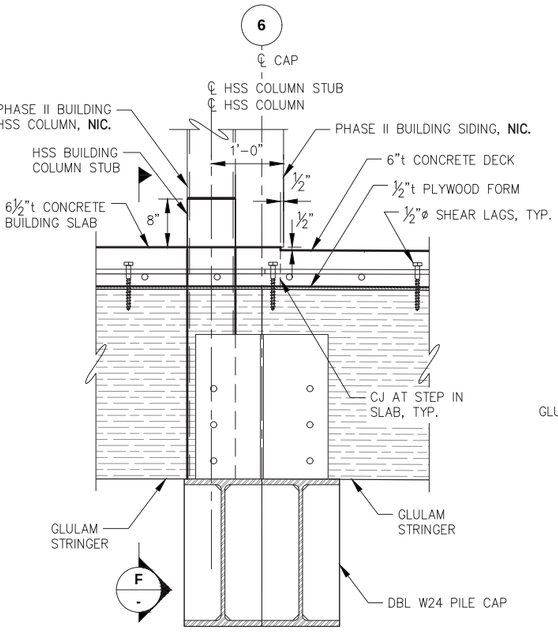

E - DECK SECTION AT PHASE II BUILDING EXTERIOR

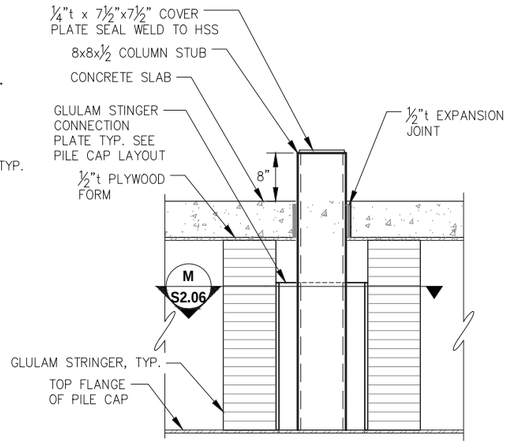

F - TYPICAL BUILDING COLUMN DETAIL

CITY & BOROUGH OF JUNEAU DOCKS & HARBORS

REVISIONS

REV.	DATE	DESCRIPTION	DWN.	CKD.	APP.

PND ENGINEERS, INC.
9360 Glacier Highway Ste 100
Juneau, Alaska 99801
Phone: 907-586-2093
Fax: 907-586-2099
www.pndengineers.com

DESIGN: MDS CHECKED: CRS
DRAWN: KLL APPROVED: CRS
SCALE: NTS
DATE: 5/23/2019

STATE OF ALASKA 49TH — Charles R. Somerville CE-8845 — REGISTERED PROFESSIONAL ENGINEER

DOWNTOWN WATERFRONT IMPROVEMENTS PHASE I
CBJ CONTRACT NO. DH19-014

SHEET TITLE: **CONCRETE DECK SECTIONS**

S2.07

PND PROJECT NO.: 182045 C.A.N. NO.: AECC250

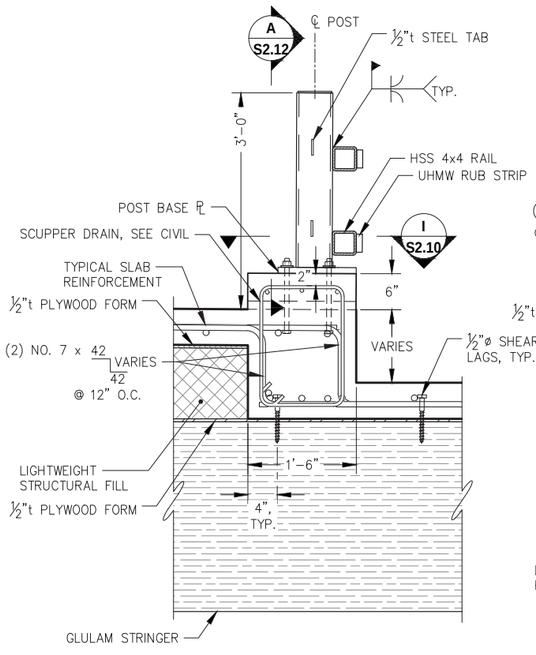

A S2.07 **DECK SECTION AT FACE MOUNTED VEHICLE RAIL**

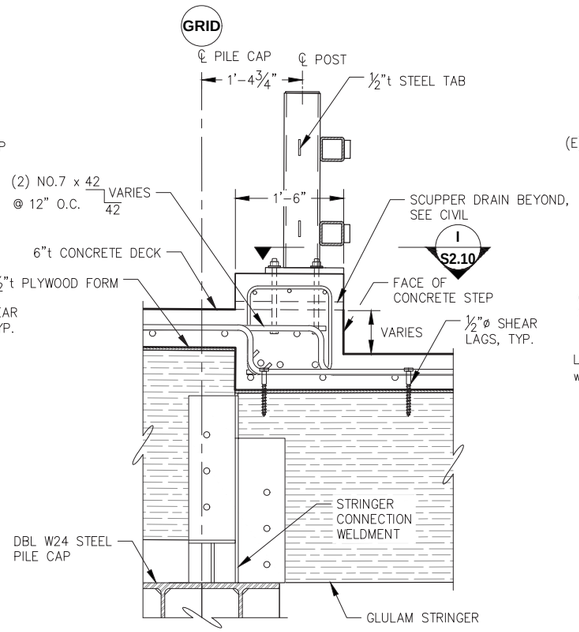

B S2.07 **DECK SECTION AT PILE CAP**

NOTE: SEE DETAIL A/- FOR DETAILS NOT CALLED OUT

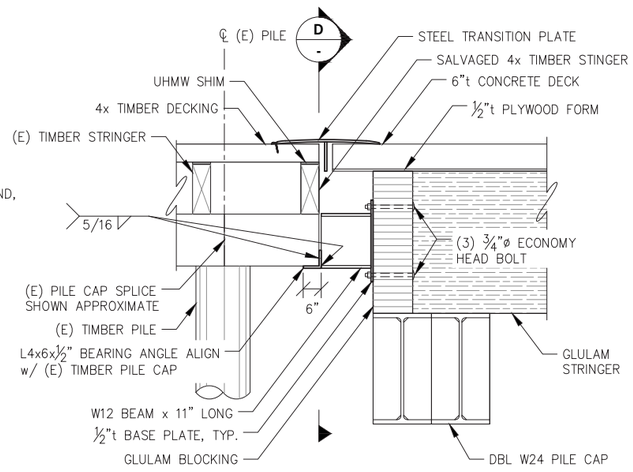

C S2.03 **EXISTING CAP SUPPORT BRACKET DETAIL**

NOTE:
1. REQUIRED AT (3) (E) PILE CAPS THAT ARE CUT OFF WHEN DEMOLISHING APPROACH DOCK.
2. BLOCKING AND STRINGER CONNECTION PLATES AND BOLTS NOT SHOWN FOR CLARITY.

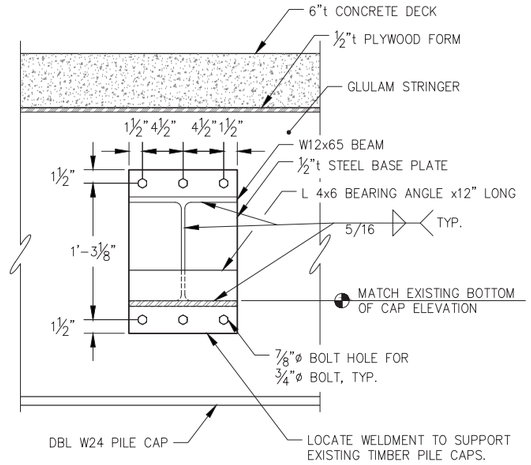

D - **EXISTING CAP SUPPORT BRACKET DETAIL**

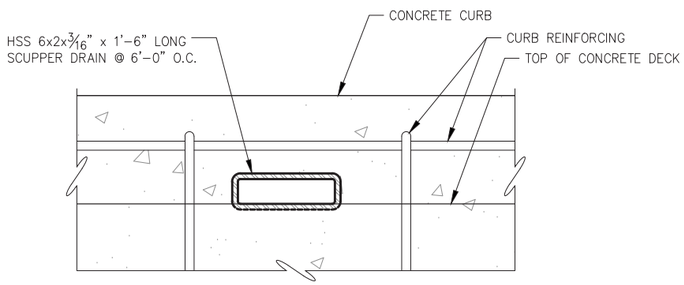

E - **TYPICAL SCUPPER DRAIN DETAIL CENTER BETWEEN GUARDRAIL POSTS, TYP.**

CITY & BOROUGH OF JUNEAU DOCKS & HARBORS

REVISIONS

REV.	DATE	DESCRIPTION	DWN.	CKD.	APP.

P N D ENGINEERS, INC.
9360 Glacier Highway Ste 100
Juneau, Alaska 99801
Phone: 907-586-2093
Fax: 907-586-2099
www.pndengineers.com

DESIGN: MDS CHECKED: CRS
DRAWN: KLL APPROVED: CRS
SCALE: NTS
DATE: 5/23/2019

STATE OF ALASKA 49TH — Charles R. Somerville CE-8845 — REGISTERED PROFESSIONAL ENGINEER

DOWNTOWN WATERFRONT IMPROVEMENTS PHASE I
CBJ CONTRACT NO. DH19-014

SHEET TITLE: **CONCRETE DECK DETAILS**

PND PROJECT NO.: 182045 C.A.N. NO.: AECC250

S2.08

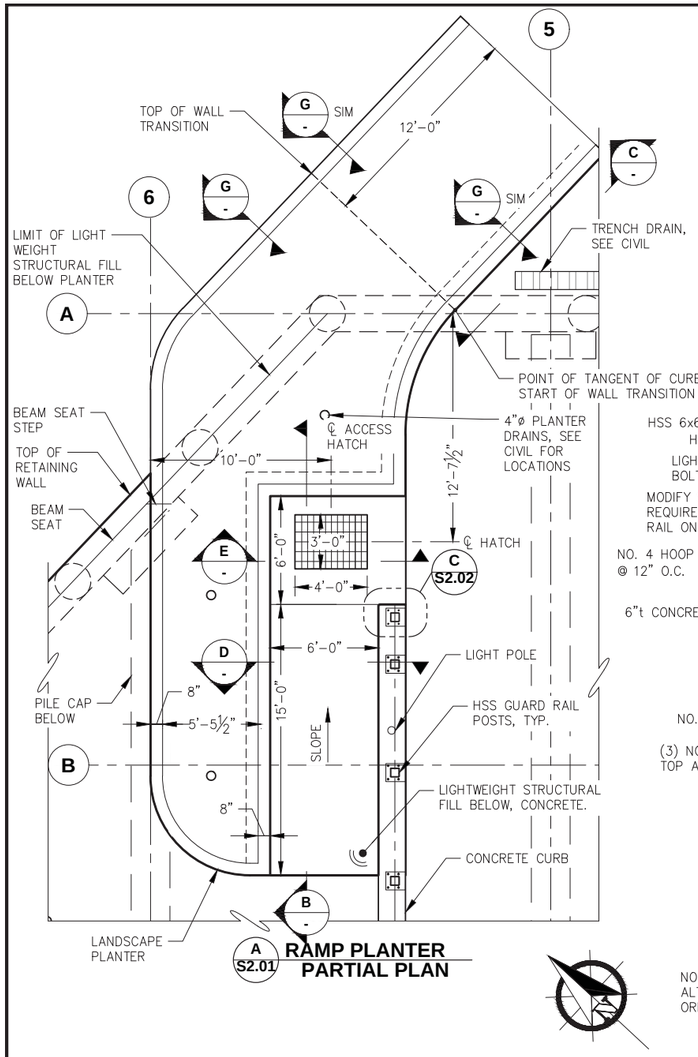

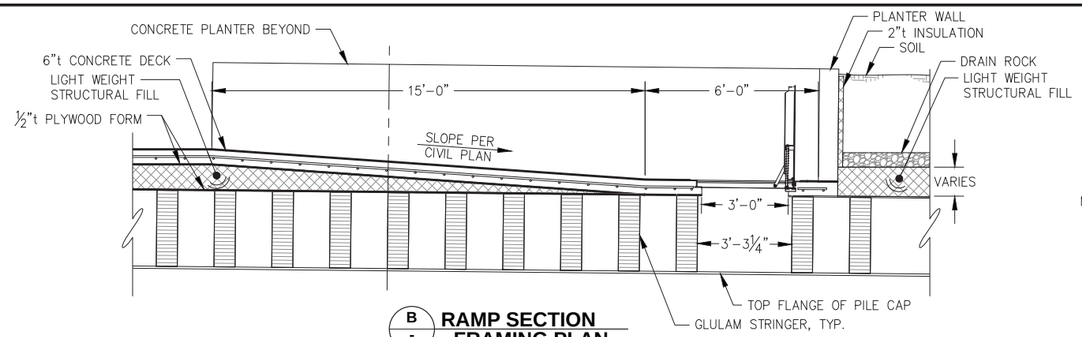

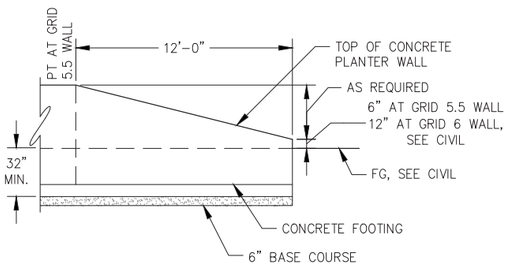

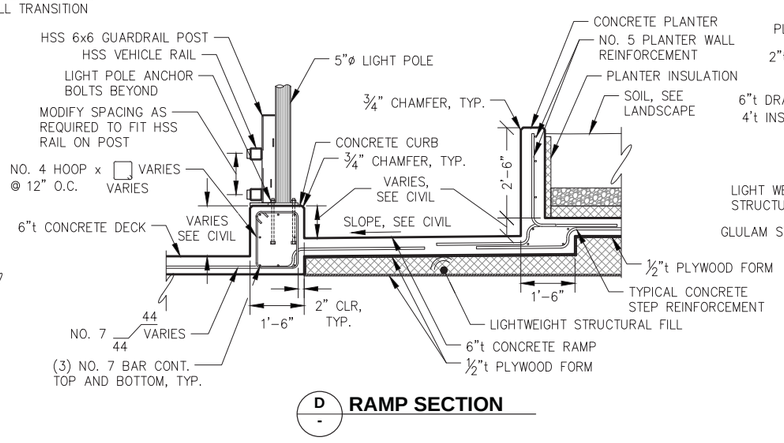

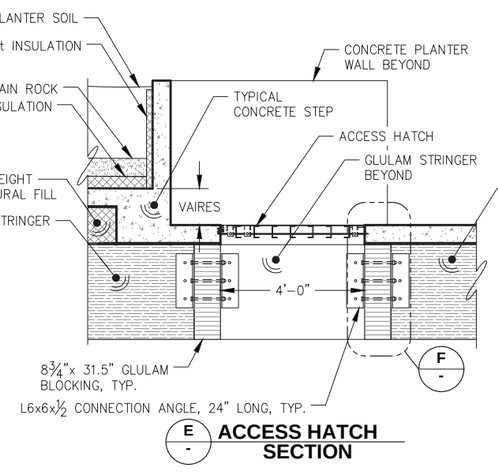

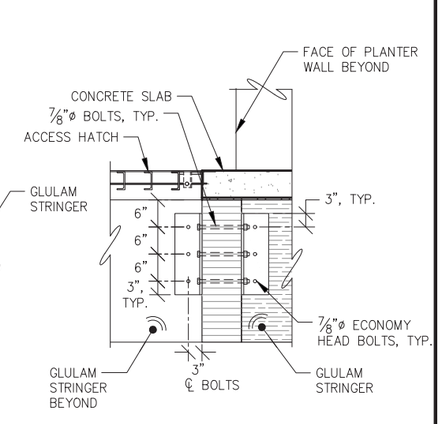

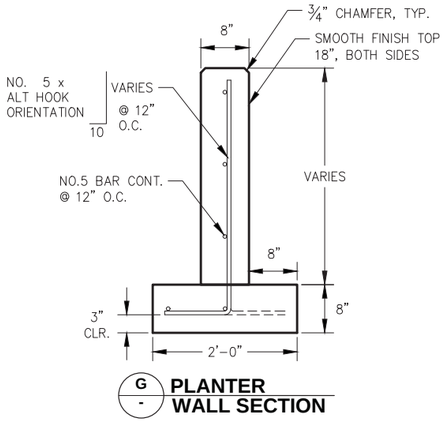

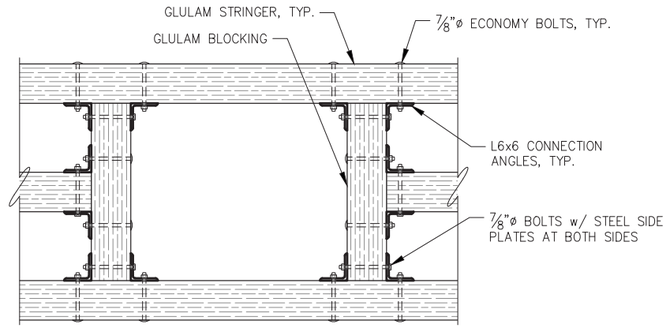

REVISIONS

REV.	DATE	DESCRIPTION	DWN.	CKD.	APP.

P N D ENGINEERS, INC.
9360 Glacier Highway Ste 100
Juneau, Alaska 99801
Phone: 907-586-2093
Fax: 907-586-2099
www.pndengineers.com

DESIGN: MDS CHECKED: CRS
DRAWN: KLL APPROVED: CRS
SCALE: NTS

STATE OF ALASKA 49TH
Charles R. Somerville
CE-8845
REGISTERED PROFESSIONAL ENGINEER
DATE: 5/23/2019

DOWNTOWN WATERFRONT IMPROVEMENTS PHASE I
CBJ CONTRACT NO. DH19-014

SHEET TITLE: **CONCRETE DECK DETAILS**

S2.09

PND PROJECT NO.: 182045 C.A.N. NO.: AECC250

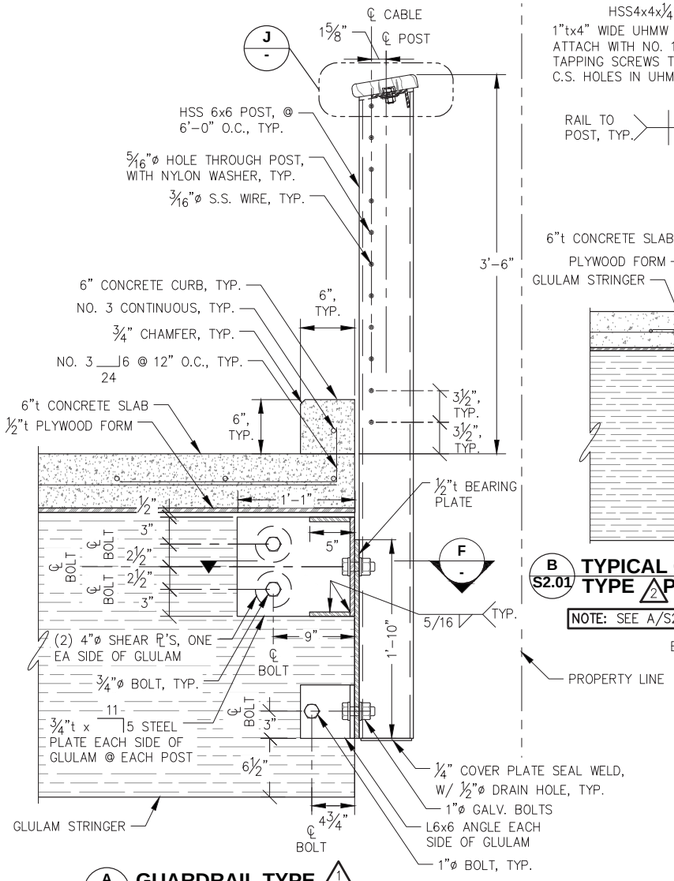

A - GUARDRAIL TYPE 1 POST SECTION

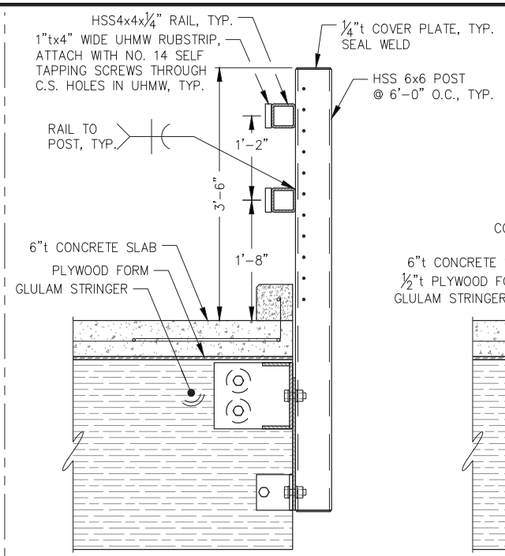

B S2.01 TYPICAL GUARDRAIL TYPE 2 POST CONNECTION DETAIL

NOTE: SEE A/S2.10 FOR CONNECTION DETAIL

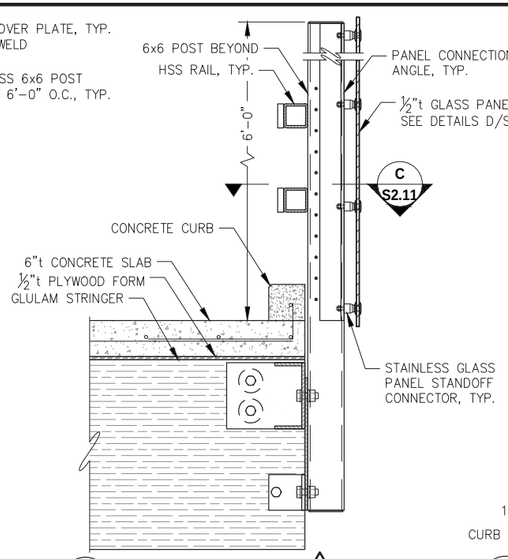

C S2.01 GUARDRAIL TYPE 3 NOISE BARRIER POST SECTION

NOTE: SEE A/S2.10 FOR CONNECTION DETAIL

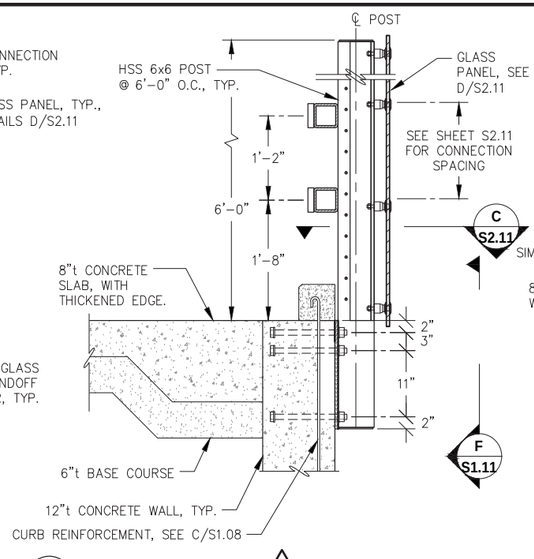

D S2.01 GUARDRAIL TYPE 4 POST CONNECTION AT CONCRETE WALL W/ NOISE BARRIER

NOTE: SEE A/S2.10 FOR NOTES NOT CALLED OUT

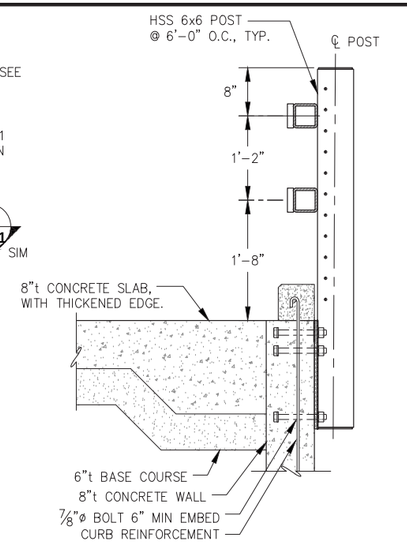

E S2.01 GUARDRAIL TYPE 5 POST CONNECTION AT CONCRETE WALL

NOTE: SEE A/S2.10 FOR NOTES NOT CALLED OUT

F - RAIL POST CONNECTION SECTION

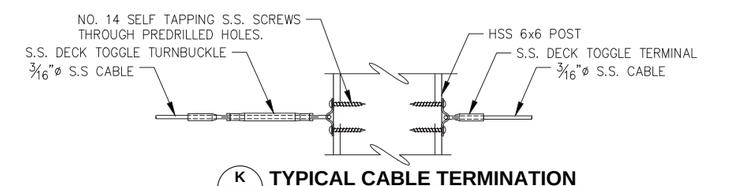

K - TYPICAL CABLE TERMINATION DETAILS

G S2.01 GUARDRAIL TYPE 6 POST CONNECTION AT SURFACE MOUNT LOCATION

H - GUARDRAIL TYPE 7 POST CONNECTION AT SURFACE MOUNT LOCATION

I - FACE MOUNT GUARDRAIL POST CONNECTION DETAIL

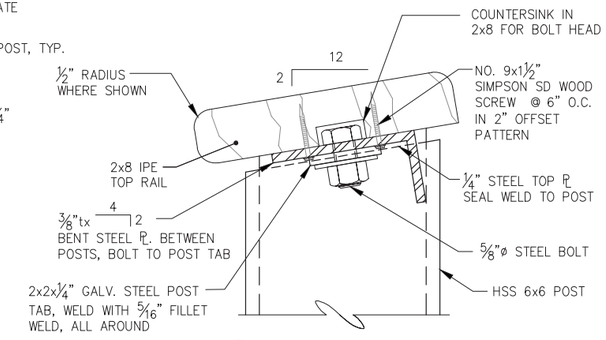

J - TYPICAL GUARDRAIL TOP RAIL DETAIL

REVISIONS

REV.	DATE	DESCRIPTION	DWN.	CKD.	APP.

PND ENGINEERS, INC.
9360 Glacier Highway Ste 100
Juneau, Alaska 99801
Phone: 907-586-2093
Fax: 907-586-2099
www.pndengineers.com

DESIGN: MDS CHECKED: CRS
DRAWN: KLL APPROVED: CRS
SCALE: NTS
DATE: 5/23/2019

STATE OF ALASKA 49TH Charles R. Somerville CE-8845 REGISTERED PROFESSIONAL ENGINEER

DOWNTOWN WATERFRONT IMPROVEMENTS PHASE I
CBJ CONTRACT NO. DH19-014

SHEET TITLE: **CONCRETE DECK RAILING SECTIONS AND ELEVATIONS**

S2.10

PND PROJECT NO.: 182045 C.A.N. NO.: AECC250

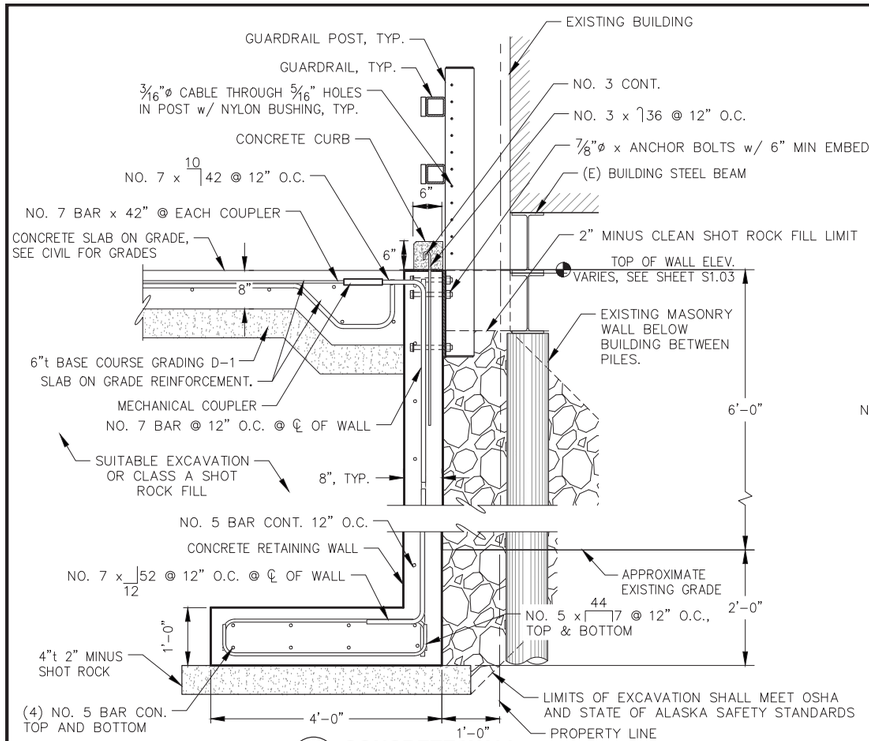

A S2.01 **CONCRETE WALL SECTION**

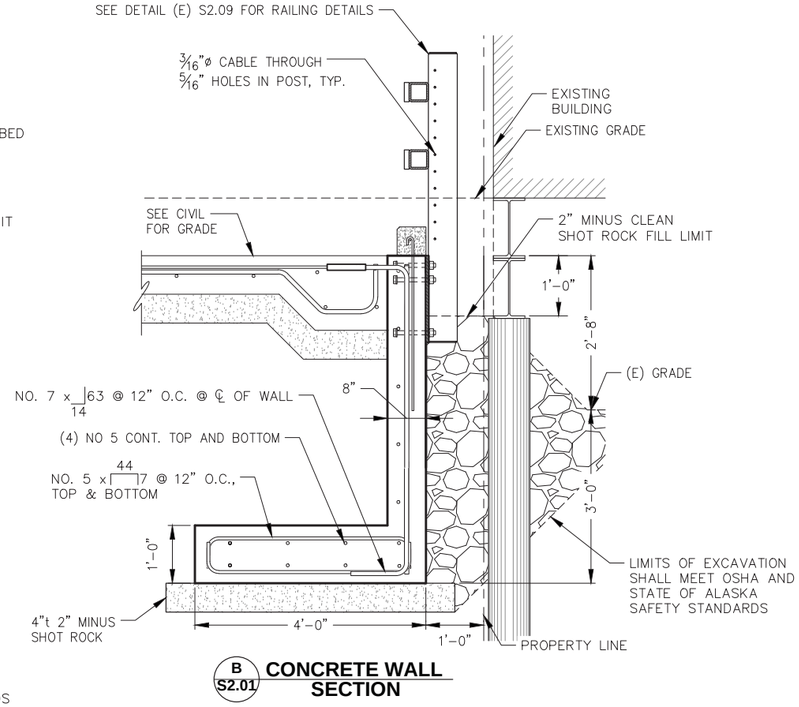

B S2.01 **CONCRETE WALL SECTION**

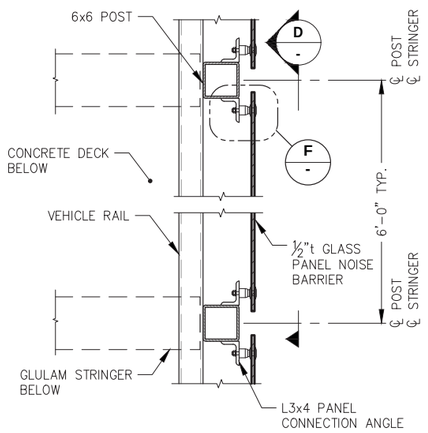

C - **VEHICLE RAIL NOISE BARRIER PANEL SECTION**

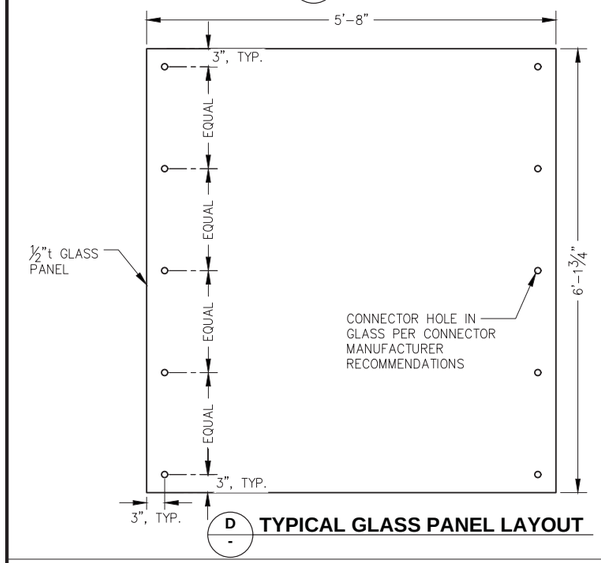

D - **TYPICAL GLASS PANEL LAYOUT**

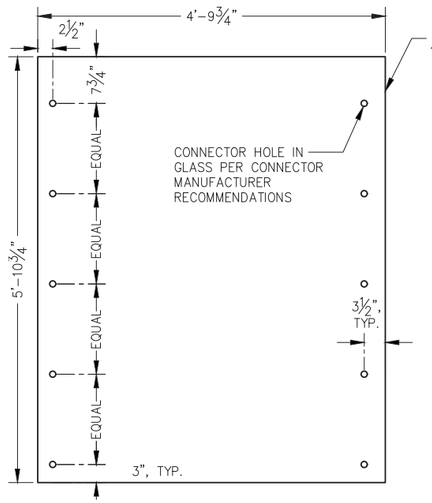

E - **GLASS PANEL AT GATE LAYOUT**

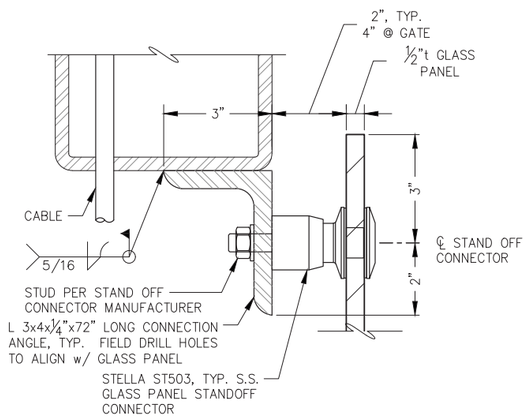

F - **TYPICAL GLASS STAND OFF CONNECTOR**

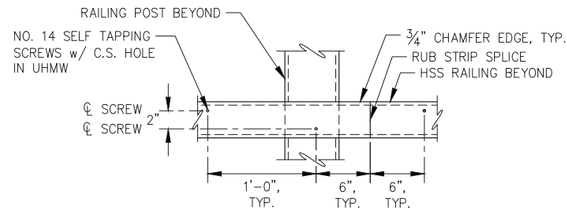

K - **RUB STRIP PROFILE**

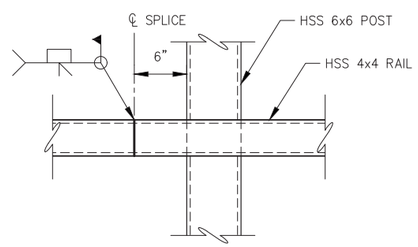

G - **TYPICAL RAIL SPLICE**

NOTE: LOCATE SPLICE IN OVERALL LENGTH OF RAILING AS REQ. FOR EASE OF CONSTRUCTION

CITY & BOROUGH OF JUNEAU DOCKS & HARBORS

REVISIONS

REV.	DATE	DESCRIPTION	DWN.	CKD.	APP.

P N D ENGINEERS, INC.
9360 Glacier Highway Ste 100
Juneau, Alaska 99801
Phone: 907-586-2093
Fax: 907-586-2099
www.pndengineers.com

DESIGN: MDS CHECKED: CRS
DRAWN: KLL APPROVED: CRS
SCALE: NTS
DATE: 5/23/2019

STATE OF ALASKA 49TH Charles R. Somerville CE-8845 REGISTERED PROFESSIONAL ENGINEER

DOWNTOWN WATERFRONT IMPROVEMENTS PHASE I
CBJ CONTRACT NO. DH19-014

SHEET TITLE:
CONCRETE WALL SECTIONS AND MISCELLANEOUS RAILING DETAIL

S2.11

PND PROJECT NO.: 182045 C.A.N. NO.: AECC250

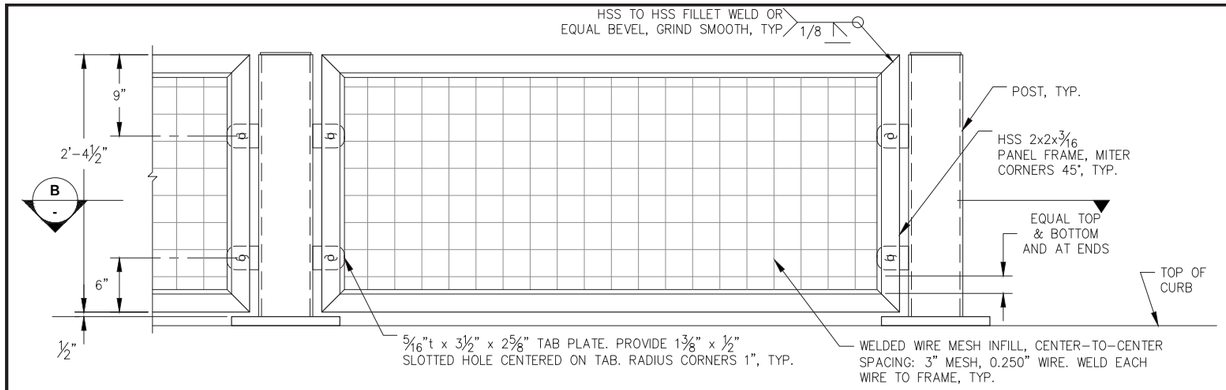

A - **TYPICAL RAILING PANEL FRAME ELEVATION**

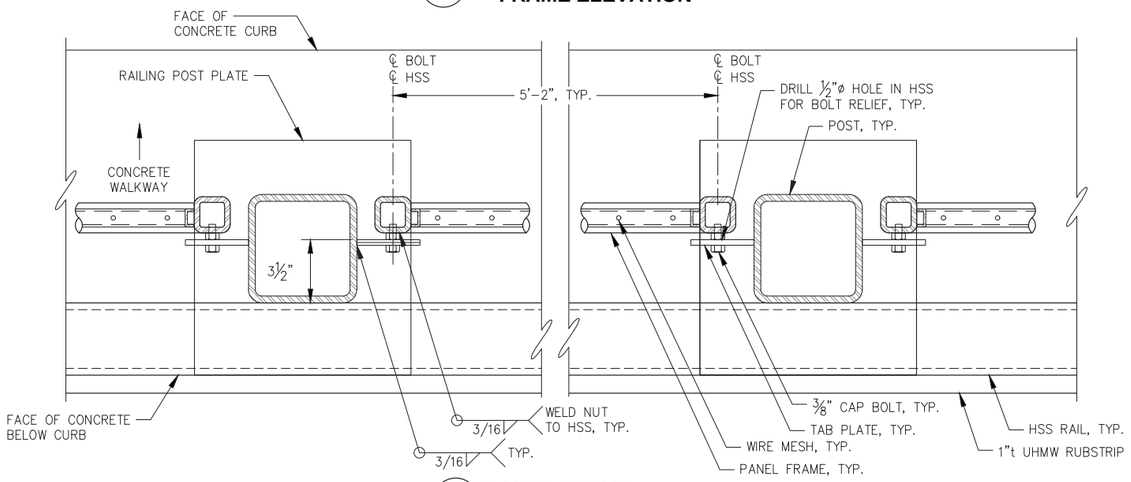

B - **PANEL FRAME CONNECTION DETAIL**

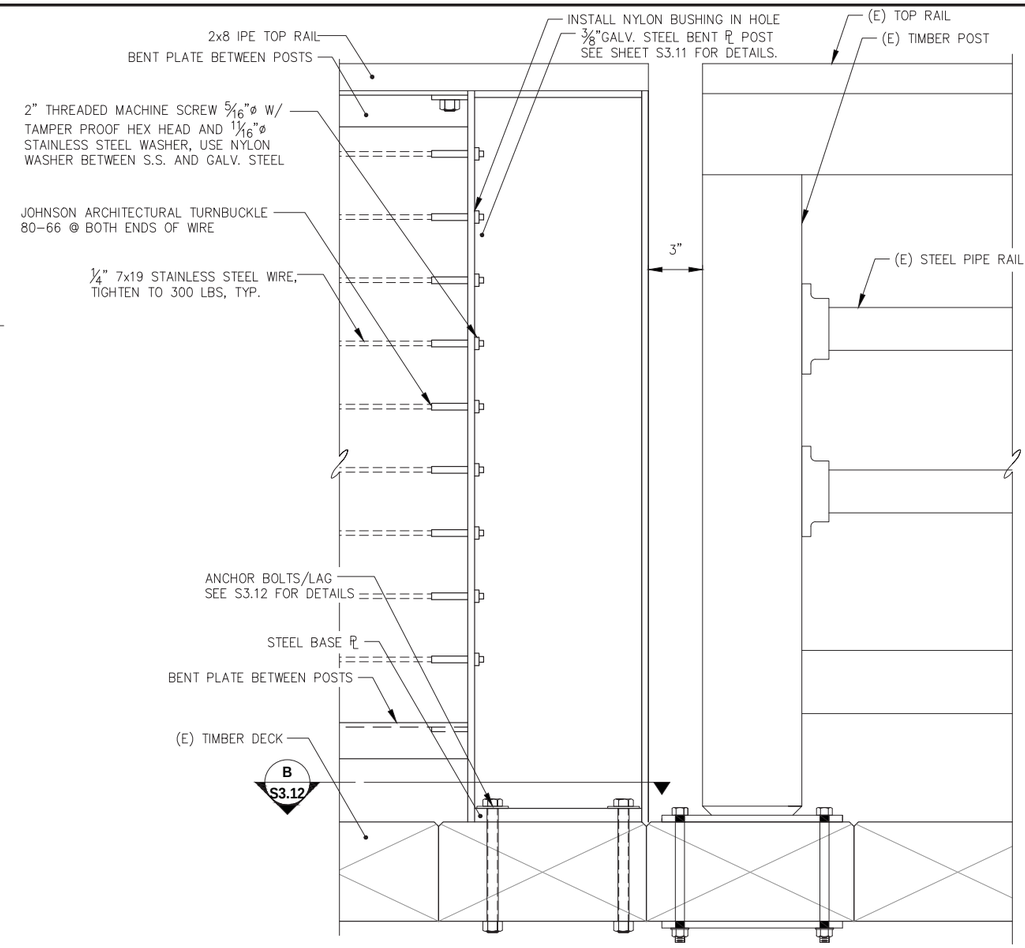

C S2.01 - **SEAWALK GUARDRAIL DETAILS**

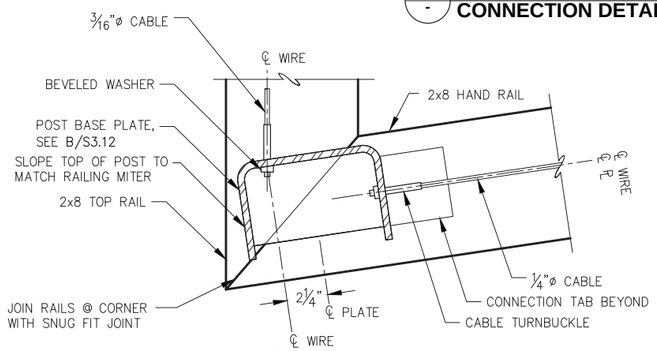

D S2.01 - **CORNER POST PLAN**

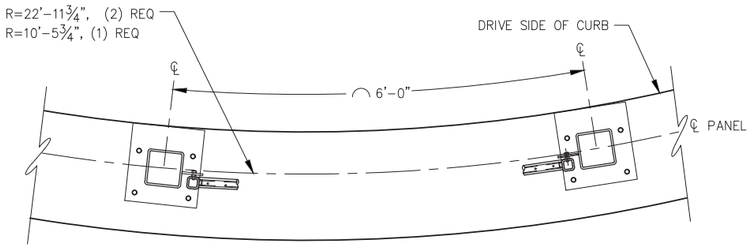

E - **PANEL FRAME CONNECTIN DETAIL**

NOTE: CONTRACTOR SHALL PROVIDE SHOP DRAWINGS OF PANEL FRAMES TO MATCH RADIUS OF CURB.

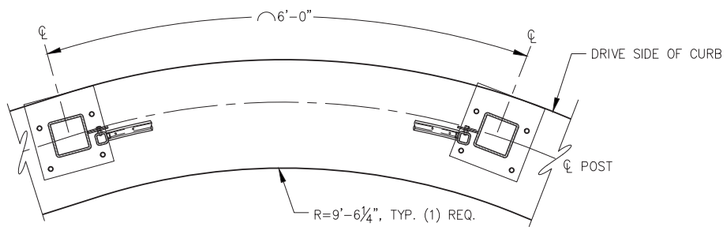

F - **PANEL FRAME CONNECTIN DETAIL**

NOTE: CONTRACTOR SHALL PROVIDE SHOP DRAWINGS OF PANEL FRAMES TO MATCH RADIUS OF CURB.

CITY & BOROUGH OF JUNEAU DOCKS & HARBORS

REVISIONS

REV.	DATE	DESCRIPTION	DWN.	CKD.	APP.

PND ENGINEERS, INC.
9360 Glacier Highway Ste 100
Juneau, Alaska 99801
Phone: 907-586-2093
Fax: 907-586-2099
www.pndengineers.com

DESIGN: MDS CHECKED: CRS
DRAWN: KLL APPROVED: CRS
SCALE: NTS
DATE: 5/23/2019

STATE OF ALASKA 49 TH Charles R. Somerville CE-8845 REGISTERED PROFESSIONAL ENGINEER

DOWNTOWN WATERFRONT IMPROVEMENTS PHASE I
CBJ CONTRACT NO. DH19-014

SHEET TITLE: **MISCELLANEOUS RAILING DETAIL**

S2.12

PND PROJECT NO.: 182045 C.A.N. NO.: AECC250

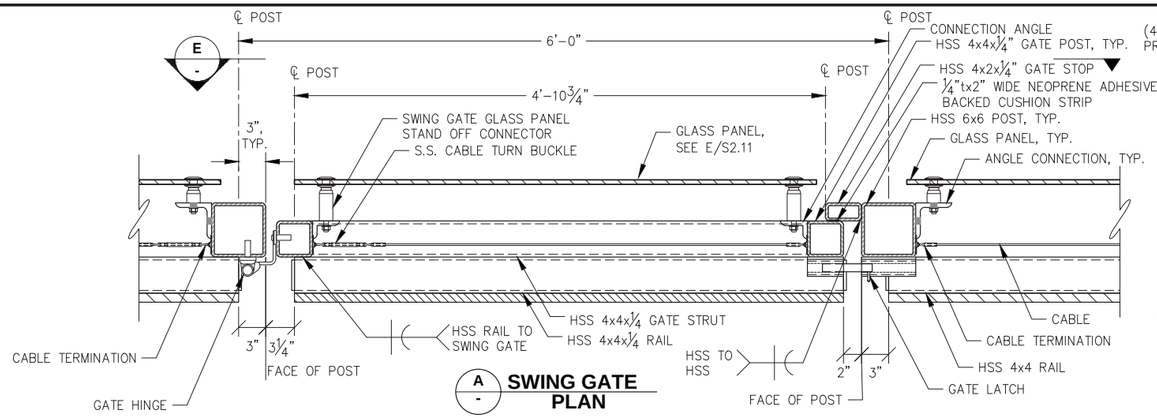

A SWING GATE PLAN

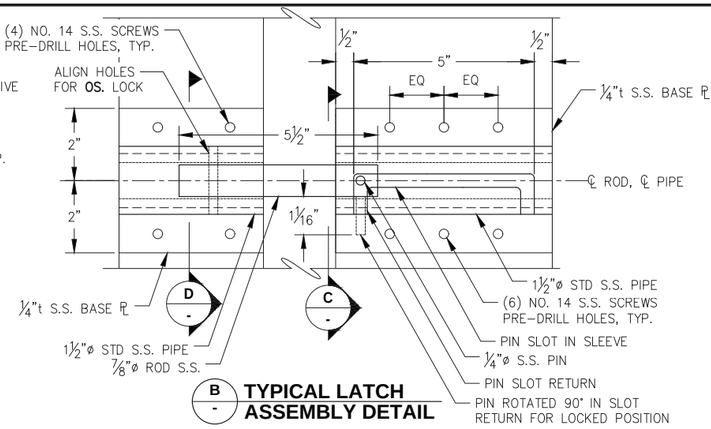

B TYPICAL LATCH ASSEMBLY DETAIL

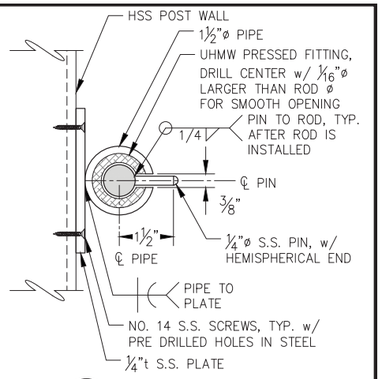

C ROD SLEEVE SECTION

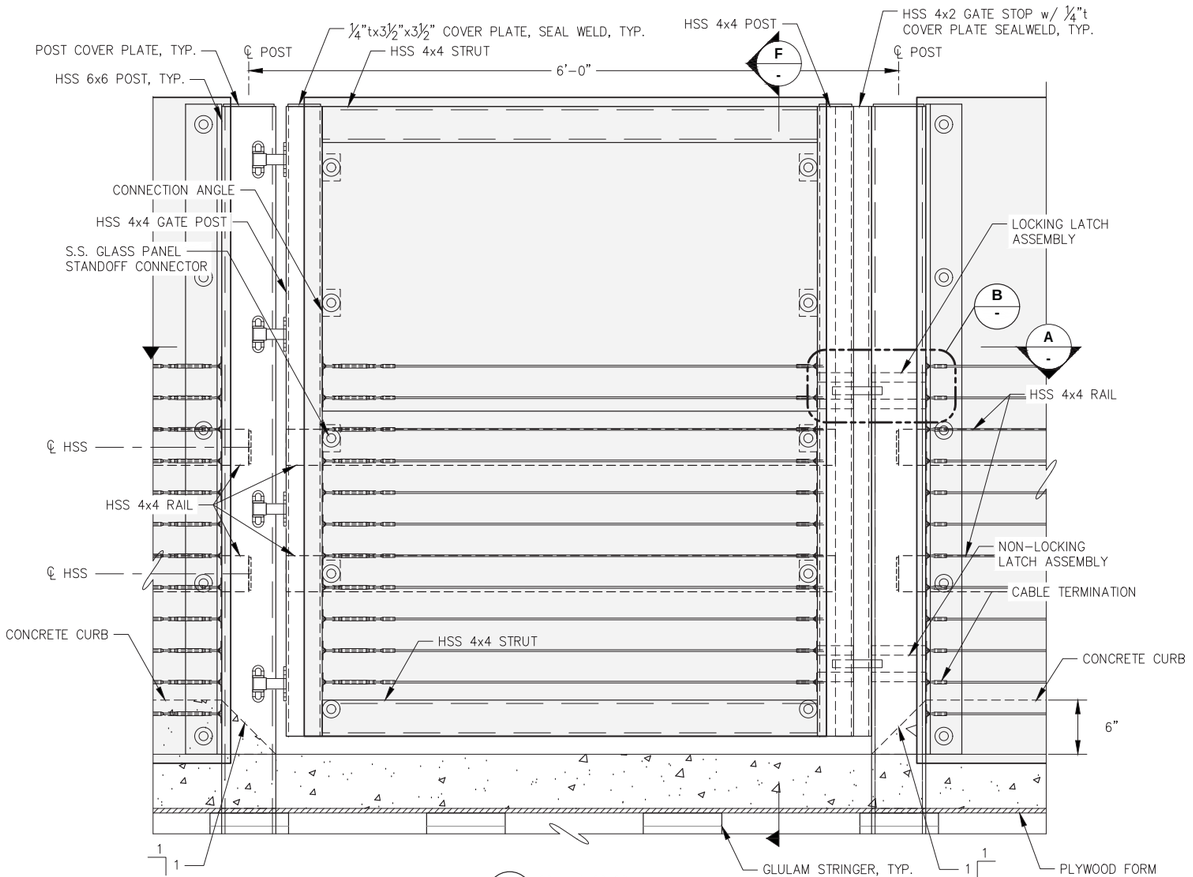

E SWING GATE ELEVATION

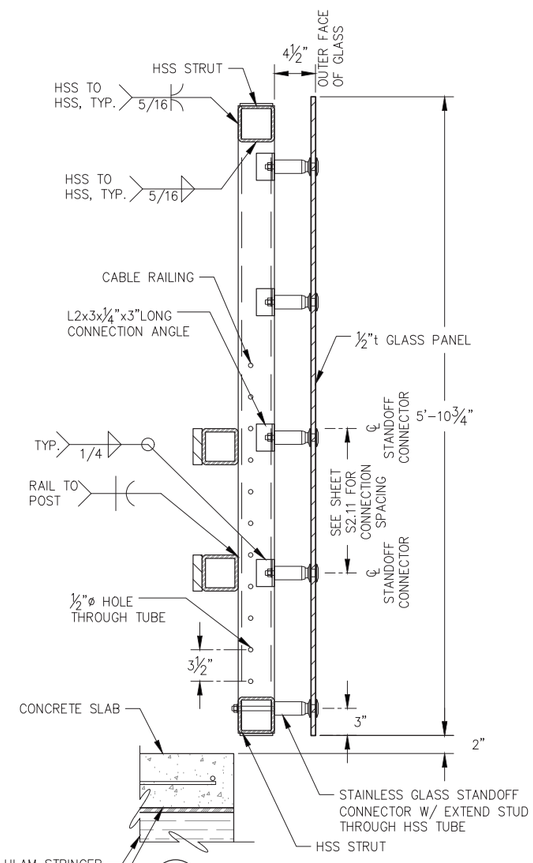

F SWING GATE SECTION

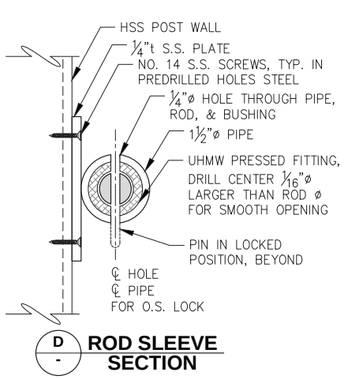

D ROD SLEEVE SECTION

NOTE:
1. FOR NON–LOCKING LATCH, NO HOLE REQUIRED ON RECEIVER SLEEVE.

2. CUT BUSHING TO MATCH STEEL PIPE SLOT @ BOTH ENDS OF SLOT, BUSHING MAY BE CUT AFTER INSTALLATION TO VERIFY ALIGNMENT.

CITY & BOROUGH OF JUNEAU DOCKS & HARBORS

REVISIONS

REV.	DATE	DESCRIPTION	DWN.	CKD.	APP.

PND ENGINEERS, INC.
9360 Glacier Highway Ste 100
Juneau, Alaska 99801
Phone: 907-586-2093
Fax: 907-586-2099
www.pndengineers.com

DESIGN: MDS CHECKED: CRS
DRAWN: KLL APPROVED: CRS
SCALE: NTS

STATE OF ALASKA 49TH — Charles R. Somerville CE-8845 — REGISTERED PROFESSIONAL ENGINEER
DATE: 5/23/2019

DOWNTOWN WATERFRONT IMPROVEMENTS PHASE I
CBJ CONTRACT NO. DH19-014

SHEET TITLE: **SWING GATE PLAN, ELEVATION, AND SECTION**

PND PROJECT NO.: 182045 C.A.N. NO.: AECC250

S2.13

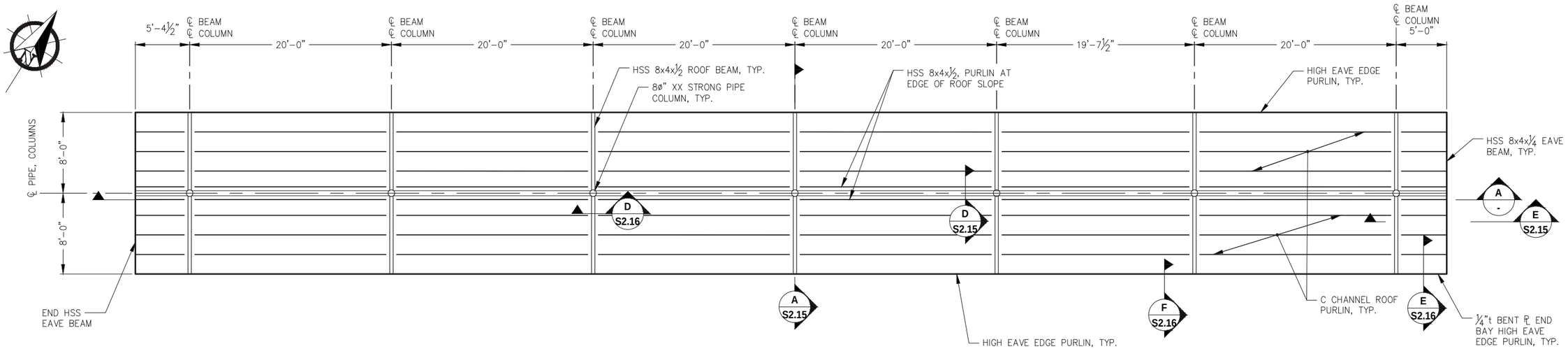

1 - **PARKING CANOPY ROOF FRAMING PLAN**

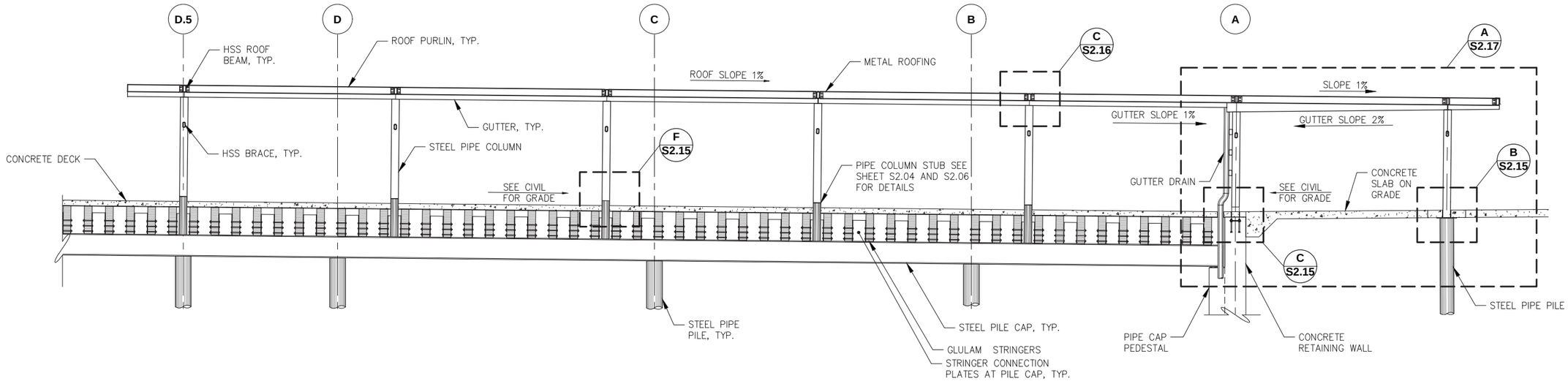

A - **PARKING CANOPY ELEVATION**

NOTE: SEE SHEET S2.04 FOR COLUMN ALIGNMENT w/ PILE CAP.

REVISIONS

REV.	DATE	DESCRIPTION	DWN.	CKD.	APP.

P N D ENGINEERS, INC.
9360 Glacier Highway Ste 100
Juneau, Alaska 99801
Phone: 907-586-2093
Fax: 907-586-2099
www.pndengineers.com

DESIGN: MDS CHECKED: CRS
DRAWN: KLL APPROVED: CRS
SCALE: SCALE IN FEET 0 5 10 FT.

STATE OF ALASKA 49 TH Charles R. Somerville CE-8845 REGISTERED PROFESSIONAL ENGINEER
DATE: 5/20/2019

DOWNTOWN WATERFRONT IMPROVEMENTS PHASE I
CBJ CONTRACT NO. DH19-014

SHEET TITLE: **PARKING CANOPY PLAN**

S2.14

PND PROJECT NO.: 182045 C.A.N. NO.: AECC250

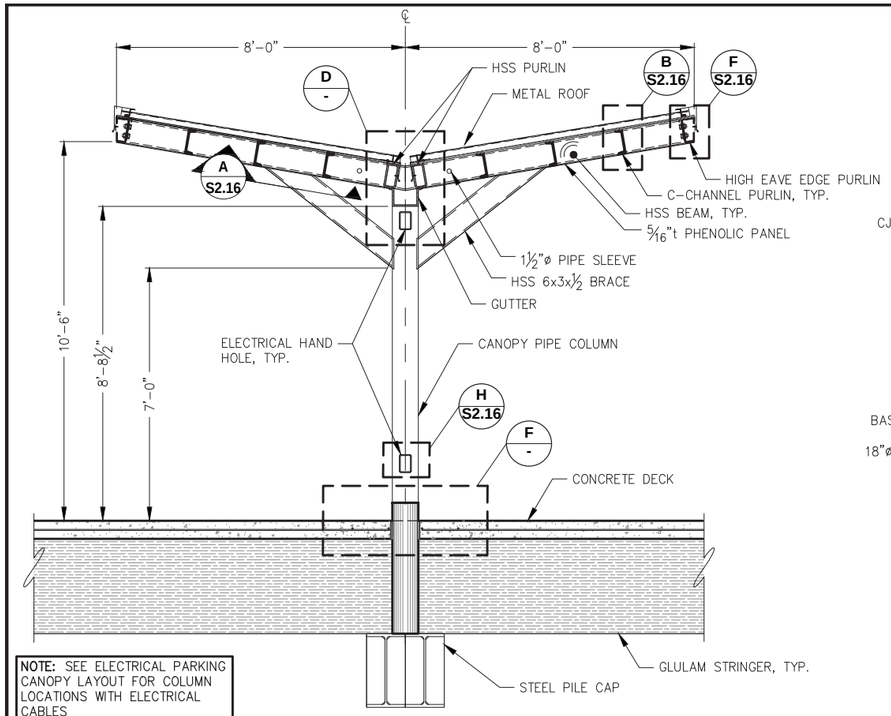

NOTE: SEE ELECTRICAL PARKING CANOPY LAYOUT FOR COLUMN LOCATIONS WITH ELECTRICAL CABLES

A S2.14 TYPICAL PARKING CANOPY SECTION

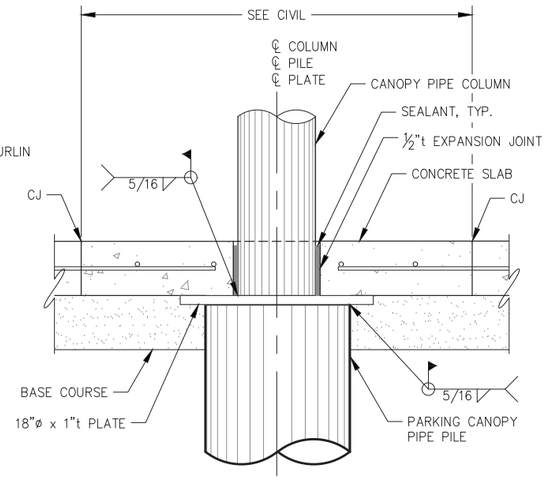

B S2.14 SHORE SIDE CANOPY CONCRETE COLLAR

(1 EA REQUIRED)

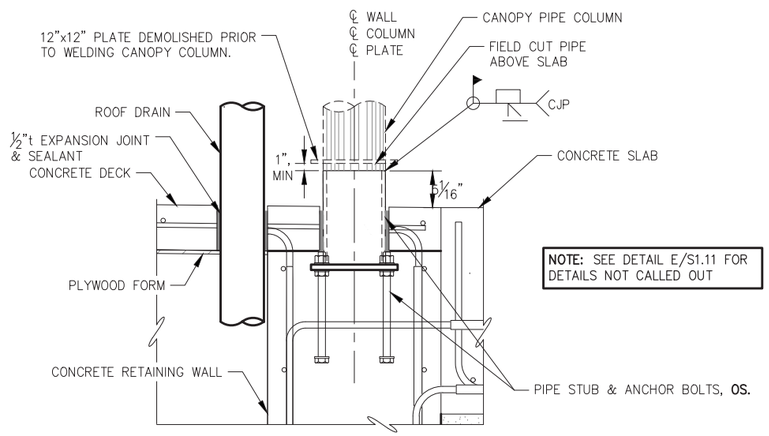

C S2.14 COLUMN BASE CONNECTION DETAIL AT RETAINING WALL

(1 EA REQUIRED)

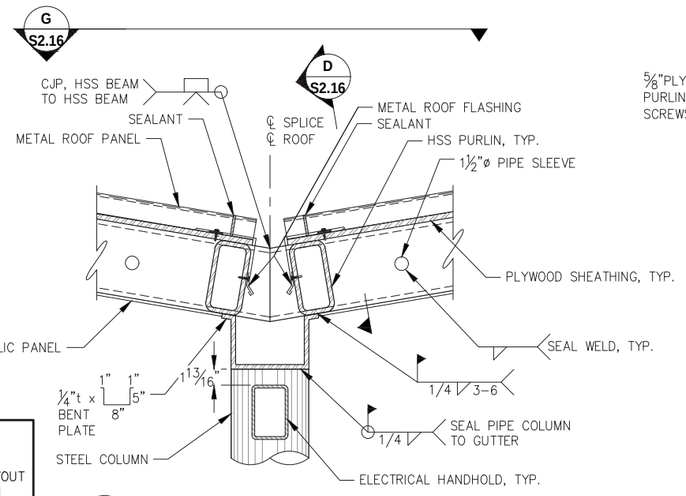

NOTE: SEE ELECTRICAL PARKING CANOPY LAYOUT FOR COLUMN LOCATIONS WITH ELECTRICAL CABLES

D S2.14 TYPICAL PARKING CANOPY ROOF BEAM AND GUTTER DETAIL

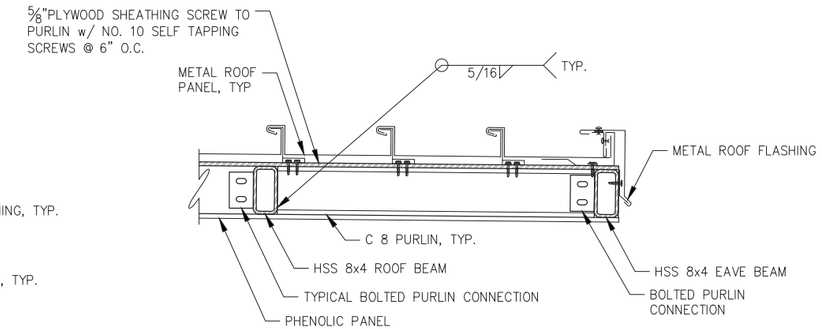

E S2.14 END EAVE DETAIL

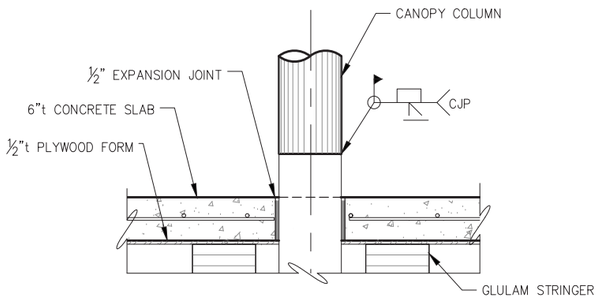

F - CANOPY COLUMN BASE CONNECTION DETAIL

REVISIONS

REV.	DATE	DESCRIPTION	DWN.	CKD.	APP.

P N D ENGINEERS, INC.
9360 Glacier Highway Ste 100
Juneau, Alaska 99801
Phone: 907-586-2093
Fax: 907-586-2099
www.pndengineers.com

DESIGN: MDS CHECKED: CRS
DRAWN: KLL APPROVED: CRS
SCALE: NTS
DATE: 5/23/2019

STATE OF ALASKA 49TH C.R. Somerville Charles R. Somerville CE-8845 REGISTERED PROFESSIONAL ENGINEER

DOWNTOWN WATERFRONT IMPROVEMENTS PHASE I
CBJ CONTRACT NO. DH19-014

SHEET TITLE: **PARKING CANOPY SECTIONS AND DETAILS**

PND PROJECT NO.: 182045 C.A.N. NO.: AECC250

S2.15

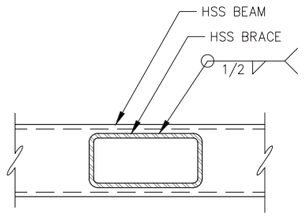

A S2.15 **TYPICAL CANOPY BRACE TO BEAM CONNECTION**

NOTE:
CONNECT BRACE COLUMN SIMILAR, NOTCH BRACES TO FORM TIGHT FIT w/ ROUND PIPE COLUMN.

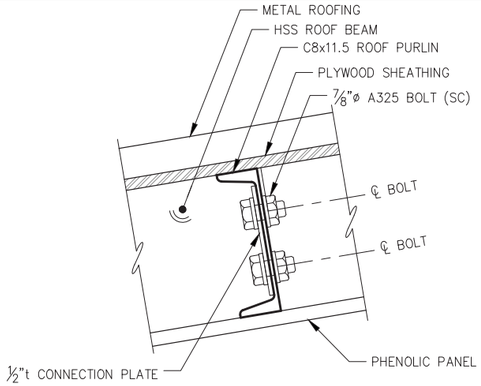

B S2.15 **TYPICAL ROOF PURLIN TO ROOF BEAM CONNECTION**

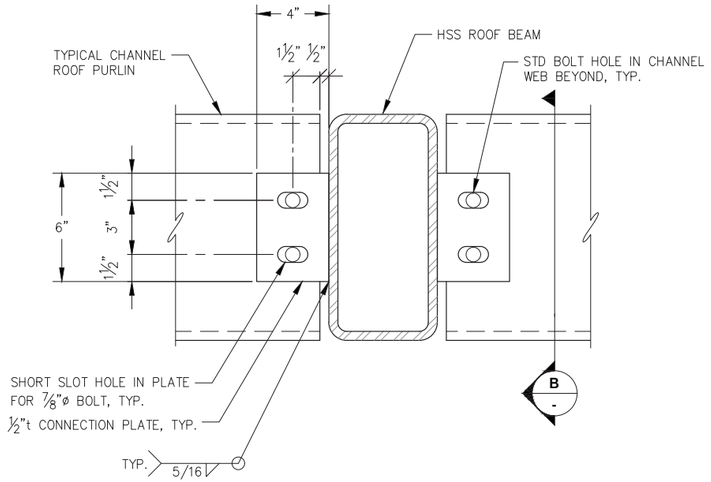

C S2.14 **TYPICAL ROOF PURLIN TO BEAM CONNECTION**

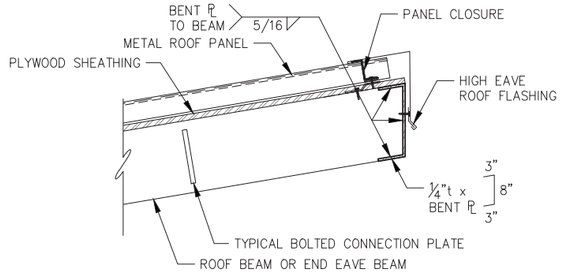

E S2.14 **ROOF EAVE SECTION AT END BAY PURLINS**

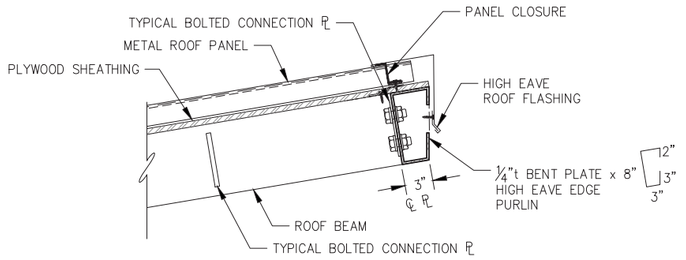

F S2.14 **TYPICAL HIGH EAVE ROOF SECTION**

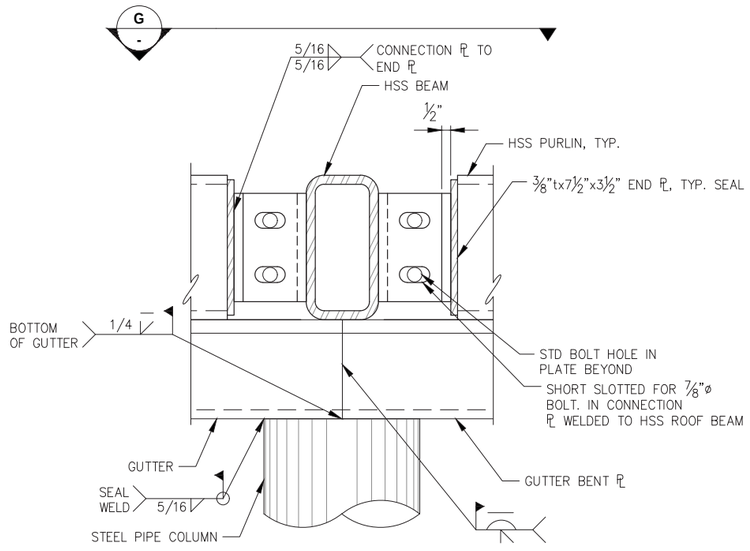

D S2.14 **TYPICAL GUTTER SPLICE AND HSS PURLIN CONNECTION**

NOTE:
1. CONTRACTOR TO LOCATE GUTTER FIELD SPLICE LOCATIONS. SPLICES SHALL BE LOCATED AT COLUMNS.
2. ALL HSS MEMBRANE SHALL HAVE ½"ø DRAIN HOLES AT LOWEST POINTS. DRAIN HOLES SHALL BE SHOWN ON SHOP DRAWINGS PRIOR TO FABRICATION.

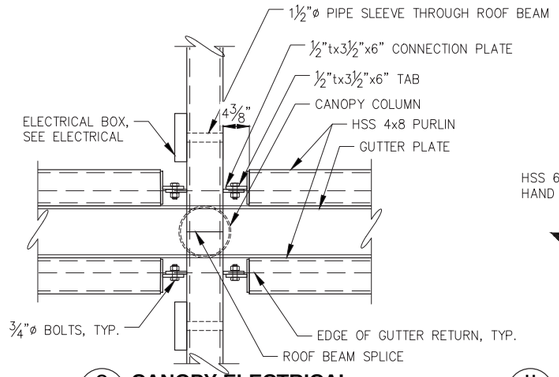

G - **CANOPY ELECTRICAL PARTIAL PLAN**

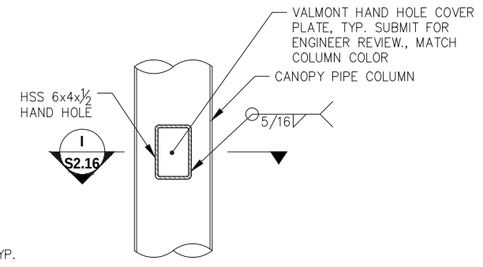

H - **TYPICAL ELECTRICAL HAND HOLE**
(3) REQ., TWO ON COLUMN ONE ON COLUMN STUB

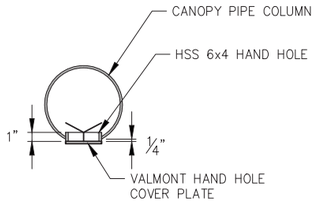

I - **ELECTRICAL HAND HOLE SECTION**

REVISIONS

REV.	DATE	DESCRIPTION	DWN.	CKD.	APP.

P N D ENGINEERS, INC.
9360 Glacier Highway Ste 100
Juneau, Alaska 99801
Phone: 907-586-2093
Fax: 907-586-2099
www.pndengineers.com

DESIGN: MDS CHECKED: CRS
DRAWN: KLL APPROVED: CRS
SCALE: NTS
DATE: 5/23/2019

STATE OF ALASKA 49 TH
Charles R. Somerville
CE-8845
REGISTERED PROFESSIONAL ENGINEER

DOWNTOWN WATERFRONT IMPROVEMENTS PHASE I
CBJ CONTRACT NO. DH19-014

SHEET TITLE:
PARKING CANOPY SECTIONS AND DETAILS

PND PROJECT NO.: 182045 C.A.N. NO.: AECC250

S2.16

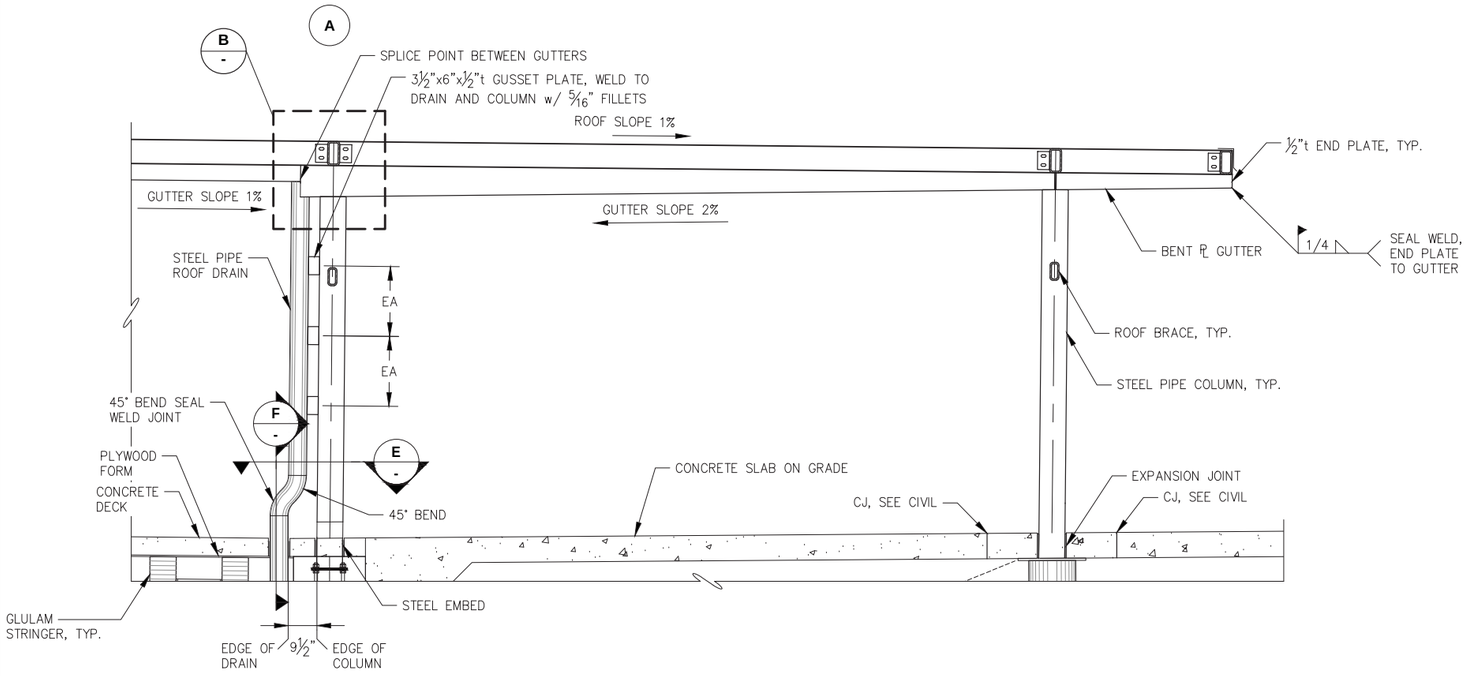

A S2.14 **CANOPY PARTIAL ELEVATION**

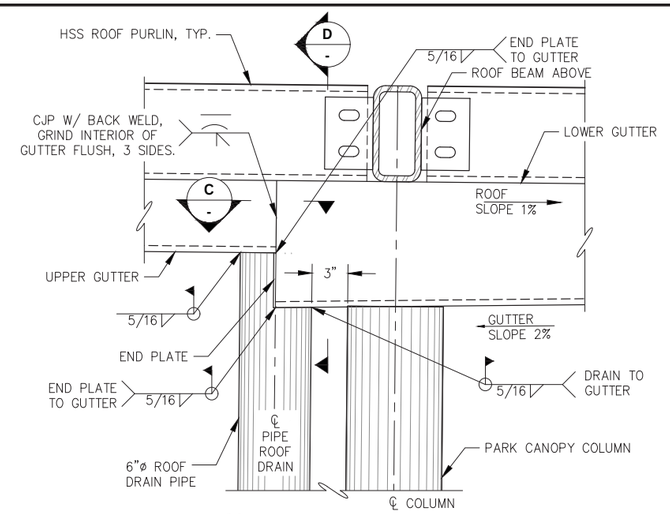

B - **GUTTER TO DRAIN DETAIL**

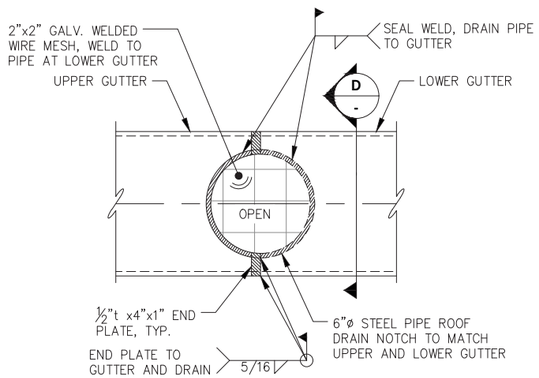

C - **GUTTER TO DRAIN SECTION**

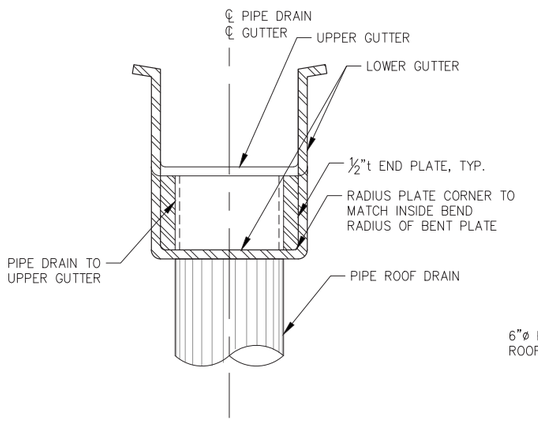

D - **GUTTER TO DRAIN SECTION**

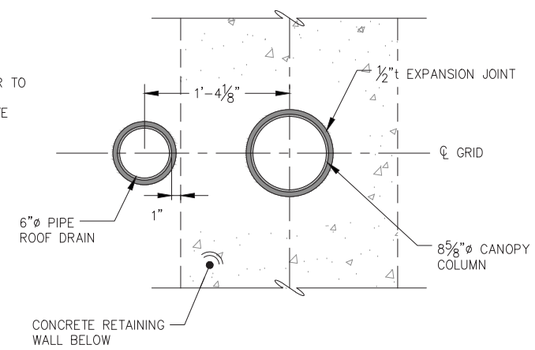

E - **PEDESTAL PLAN**

F - **PIPE DETAIL BELOW CONCRETE DECK**

REVISIONS

REV.	DATE	DESCRIPTION	DWN.	CKD.	APP.

PND ENGINEERS, INC.
9360 Glacier Highway Ste 100
Juneau, Alaska 99801
Phone: 907-586-2093
Fax: 907-586-2099
www.pndengineers.com

DESIGN: MDS CHECKED: CRS
DRAWN: KLL APPROVED: CRS
SCALE: NTS
DATE: 5/23/2019

STATE OF ALASKA 49TH — Charles R. Somerville CE-8845 — REGISTERED PROFESSIONAL ENGINEER

DOWNTOWN WATERFRONT IMPROVEMENTS PHASE I
CBJ CONTRACT NO. DH19-014

SHEET TITLE: **PARKING CANOPY SECTIONS AND DETAILS**

PND PROJECT NO.: 182045 C.A.N. NO.: AECC250

S2.17

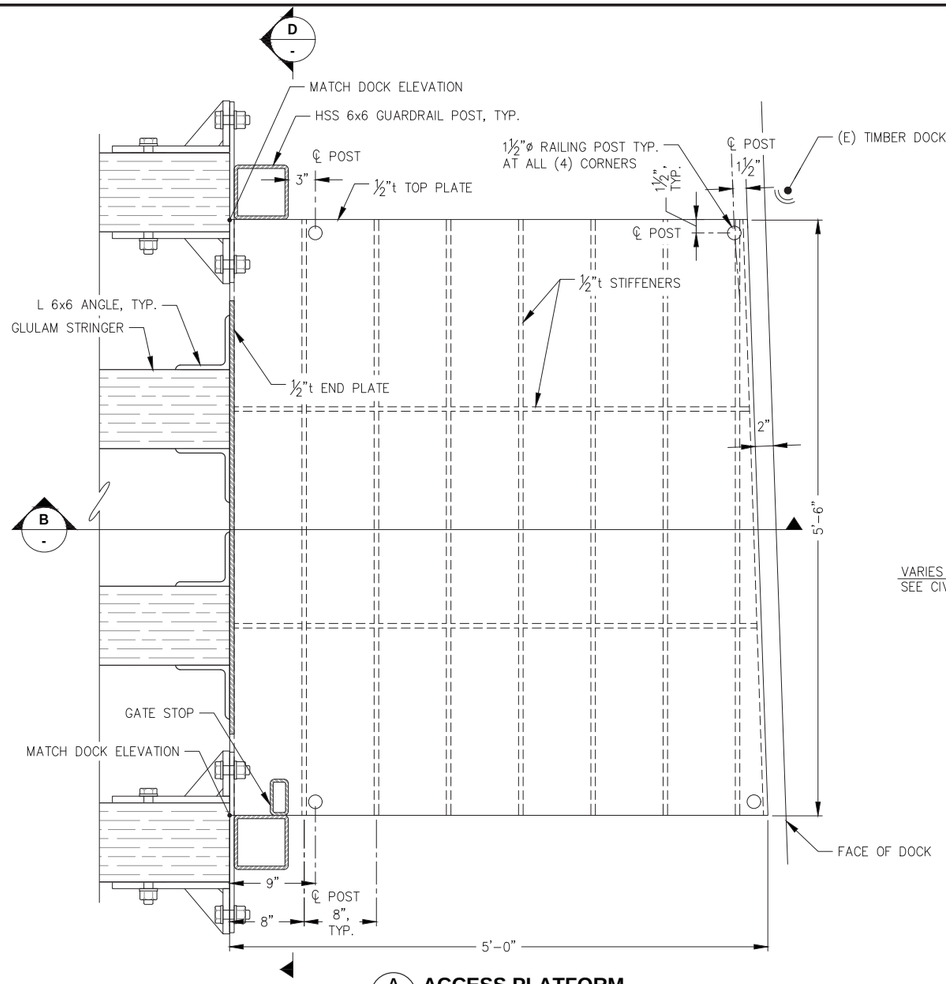

A - ACCESS PLATFORM PLAN

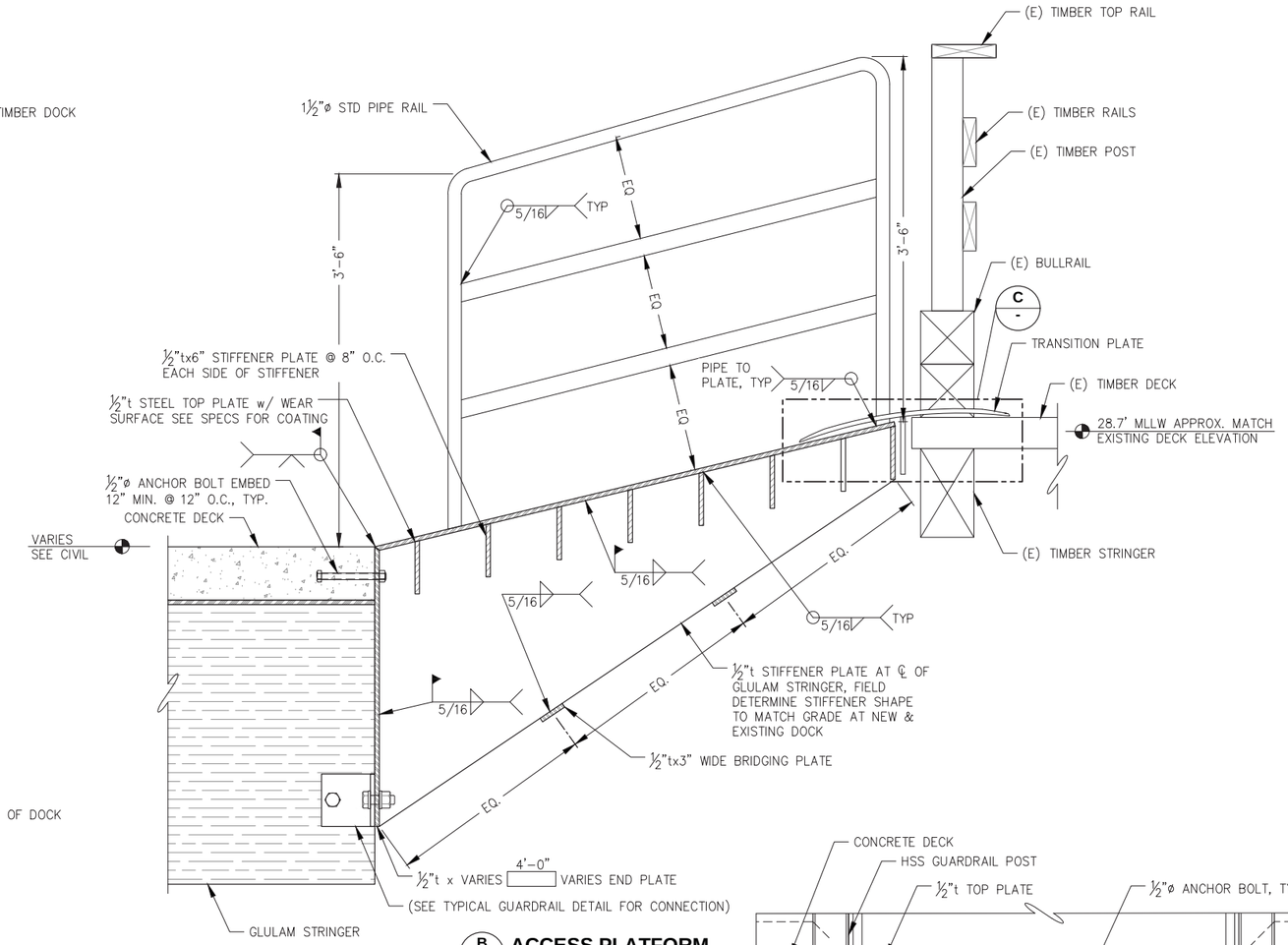

B - ACCESS PLATFORM SECTION

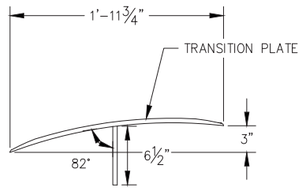

C - TRANSITION PLATE DETAIL

NOTE: FOR DETAILS NOT CALLED OUT, SEE A/S1.15

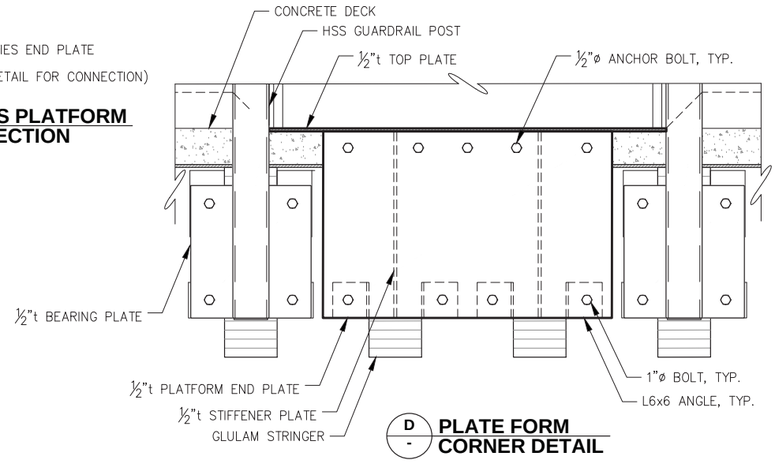

D - PLATE FORM CORNER DETAIL

CITY & BOROUGH OF JUNEAU DOCKS & HARBORS

REVISIONS

REV.	DATE	DESCRIPTION	DWN.	CKD.	APP.

PND ENGINEERS, INC.
9360 Glacier Highway Ste 100
Juneau, Alaska 99801
Phone: 907-586-2093
Fax: 907-586-2099
www.pndengineers.com

STATE OF ALASKA 49TH
Charles R. Somerville
CE-8845
REGISTERED PROFESSIONAL ENGINEER

DESIGN: MDS CHECKED: CRS
DRAWN: KLL APPROVED: CRS
SCALE: NTS
DATE: 5/29/2019

DOWNTOWN WATERFRONT IMPROVEMENTS PHASE I
CBJ CONTRACT NO. DH19-014

SHEET TITLE: **ACCESS PLATFORM**

PND PROJECT NO.: 182045 C.A.N. NO.: AECC250

S2.18

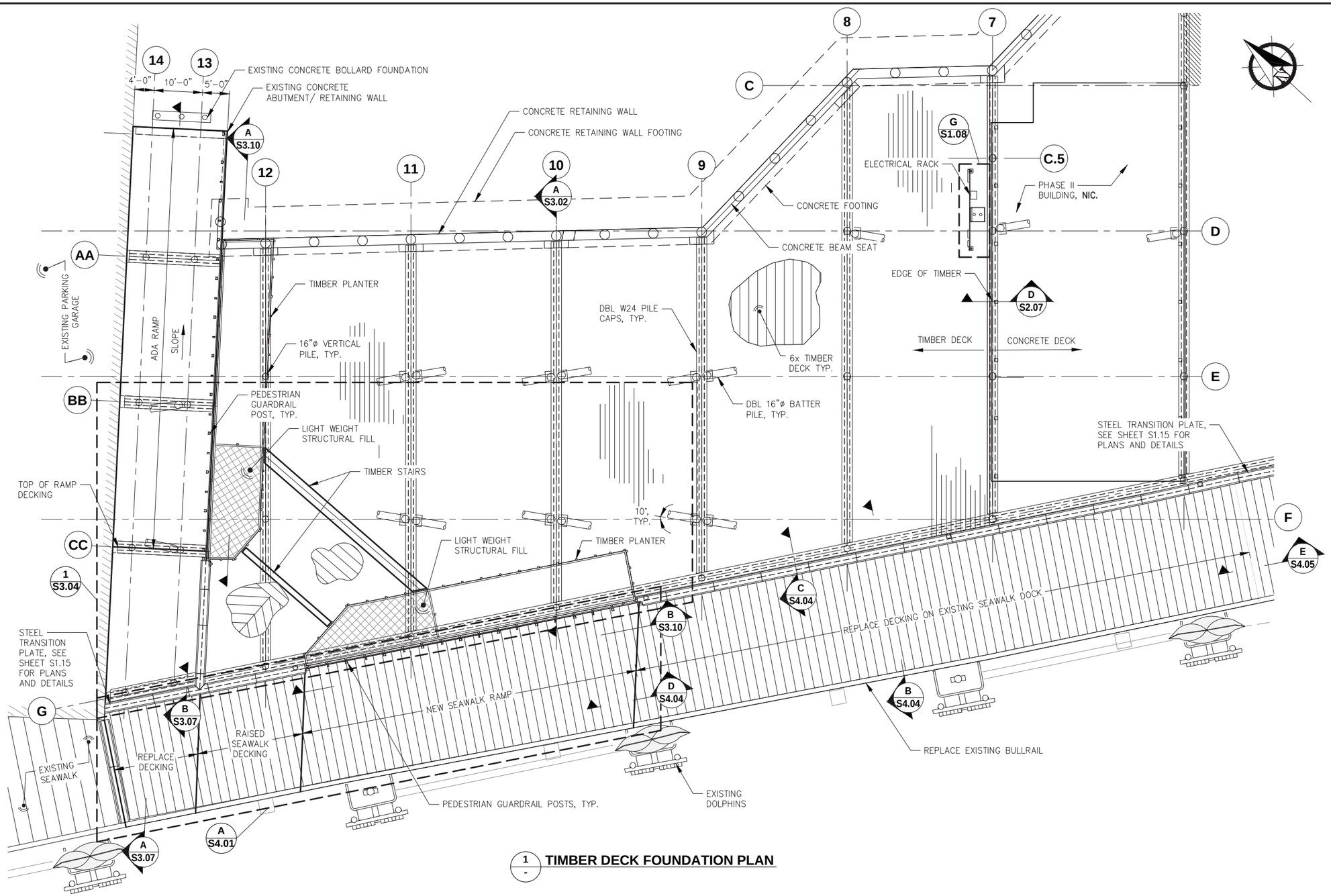

1 - **TIMBER DECK FOUNDATION PLAN**

REVISIONS

REV.	DATE	DESCRIPTION	DWN.	CKD.	APP.

PND ENGINEERS, INC.
9360 Glacier Highway Ste 100
Juneau, Alaska 99801
Phone: 907-586-2093
Fax: 907-586-2099
www.pndengineers.com

DESIGN: MDS CHECKED: CRS
DRAWN: KLL APPROVED: CRS
SCALE: SCALE IN FEET 0 10 20 FT.

STATE OF ALASKA 49 TH
Charles R. Somerville CE-8845
REGISTERED PROFESSIONAL ENGINEER
DATE: 5/23/2019

DOWNTOWN WATERFRONT IMPROVEMENTS PHASE I
CBJ CONTRACT NO. DH19-014

SHEET TITLE: **TIMBER DECK PARTIAL PLAN**

PND PROJECT NO.: 182045 C.A.N. NO.: AECC250

S3.01

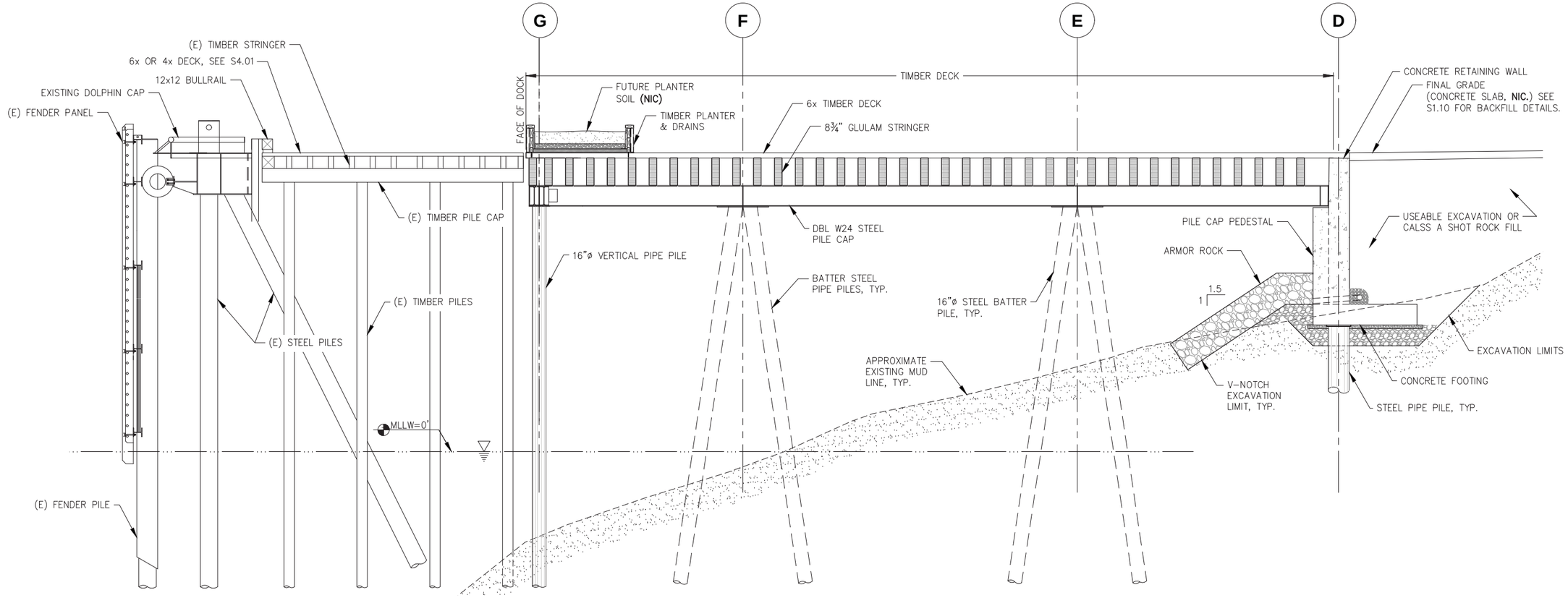

A / S3.01 TIMBER DECK SECTION AT GRID 10

REVISIONS

REV.	DATE	DESCRIPTION	DWN.	CKD.	APP.

P N D ENGINEERS, INC.
9360 Glacier Highway Ste 100
Juneau, Alaska 99801
Phone: 907-586-2093
Fax: 907-586-2099
www.pndengineers.com

DESIGN: MDS CHECKED: CRS
DRAWN: KLL APPROVED: CRS
SCALE: SCALE IN FEET 0 5 10 FT.

STATE OF ALASKA 49TH Charles R. Somerville CE-8845 REGISTERED PROFESSIONAL ENGINEER
DATE: 5/23/2019

DOWNTOWN WATERFRONT IMPROVEMENTS PHASE I
CBJ CONTRACT NO. DH19-014

SHEET TITLE: **TIMBER DECK SECTION**

S3.02

PND PROJECT NO.: 182045 C.A.N. NO.: AECC250

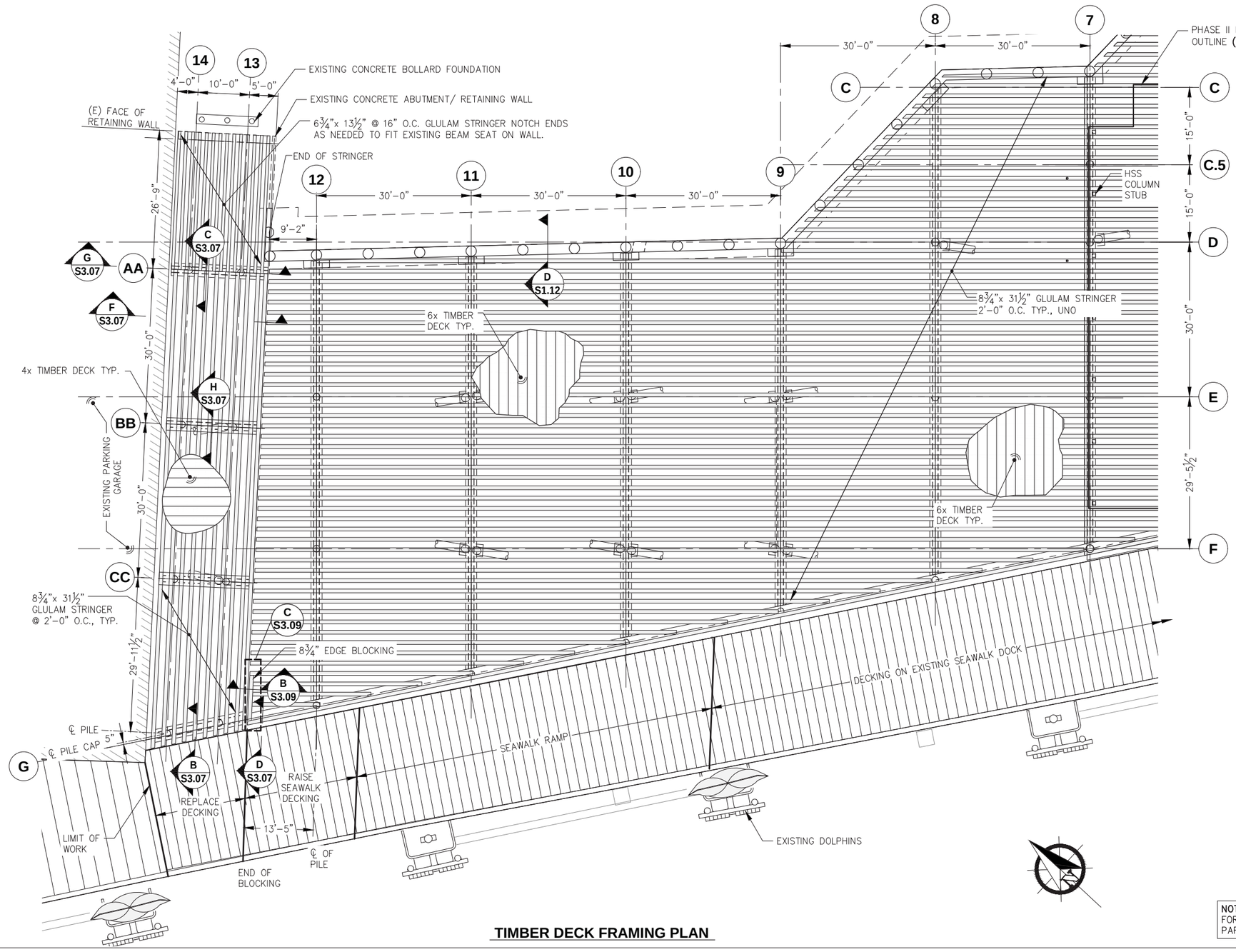

TIMBER DECK FRAMING PLAN

NOTE: OVER FRAMING NOT SHOWN THIS SHEET FOR CLARITY, SEE S3.04 FOR OVER FRAMING PARTIAL PLAN

REVISIONS

REV.	DATE	DESCRIPTION	DWN.	CKD.	APP.

PND ENGINEERS, INC.
9360 Glacier Highway Ste 100
Juneau, Alaska 99801
Phone: 907-586-2093
Fax: 907-586-2099
www.pndengineers.com

DESIGN: MDS CHECKED: CRS
DRAWN: KLL APPROVED: CRS
SCALE: SCALE IN FEET 0 10 20 FT.
DATE: 5/23/2019

STATE OF ALASKA 49 TH — Charles R. Somerville CE-8845 — REGISTERED PROFESSIONAL ENGINEER

DOWNTOWN WATERFRONT IMPROVEMENTS PHASE I
CBJ CONTRACT NO. DH19-014

SHEET TITLE: **TIMBER DECK FRAMING PLAN**

PND PROJECT NO.: 182045 C.A.N. NO.: AECC250

S3.03

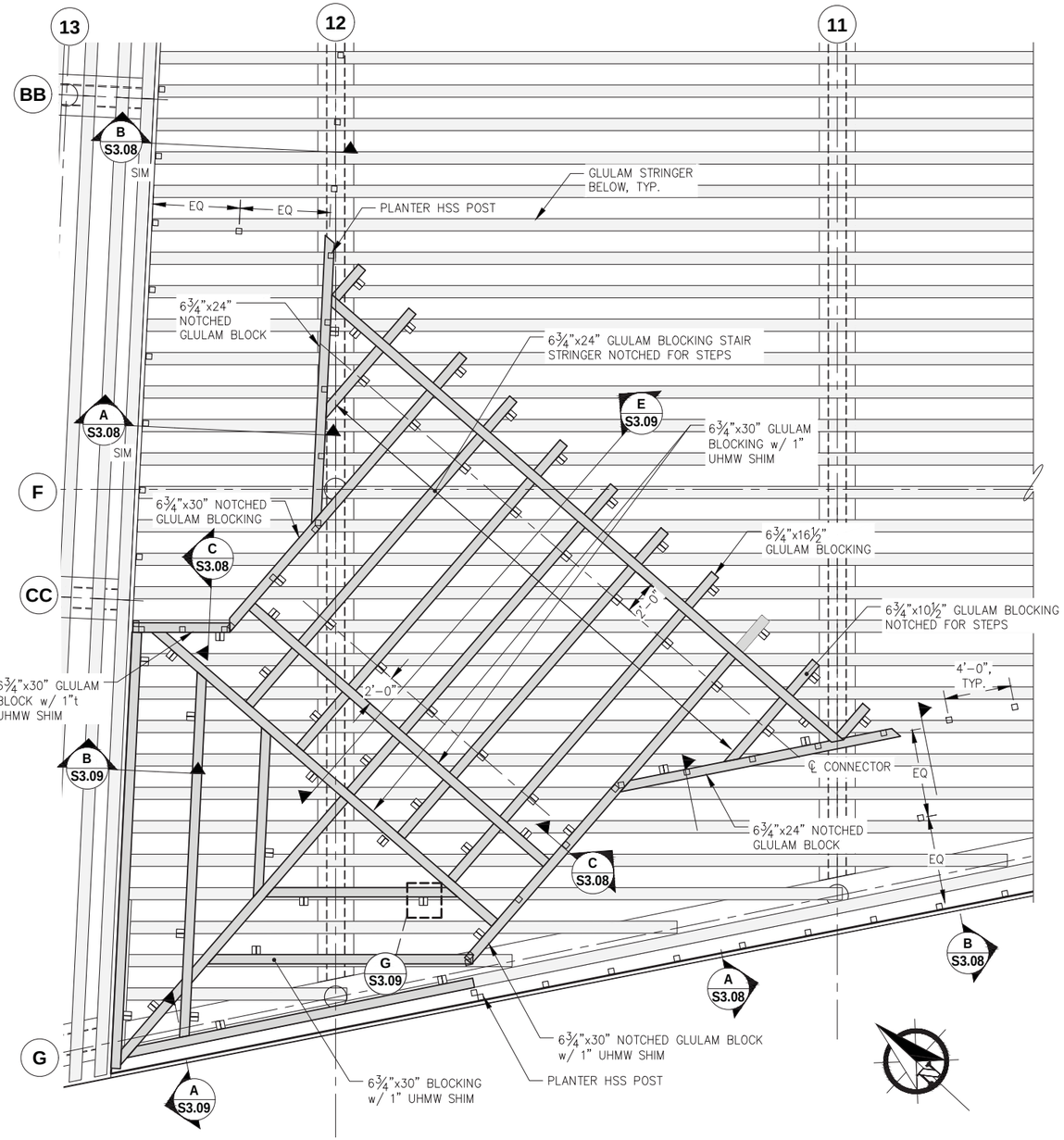

1 S3.01 **TIMBER DECK OVER FRAMING PLAN**

NOTE: ◫ INDICATES OVER FRAME CONNECTION BRACKET LOCATION
MEMBERS LESS THAN 4' LONG ONLY REQUIRE (1) CONNECTION BRACKET @ CENTER

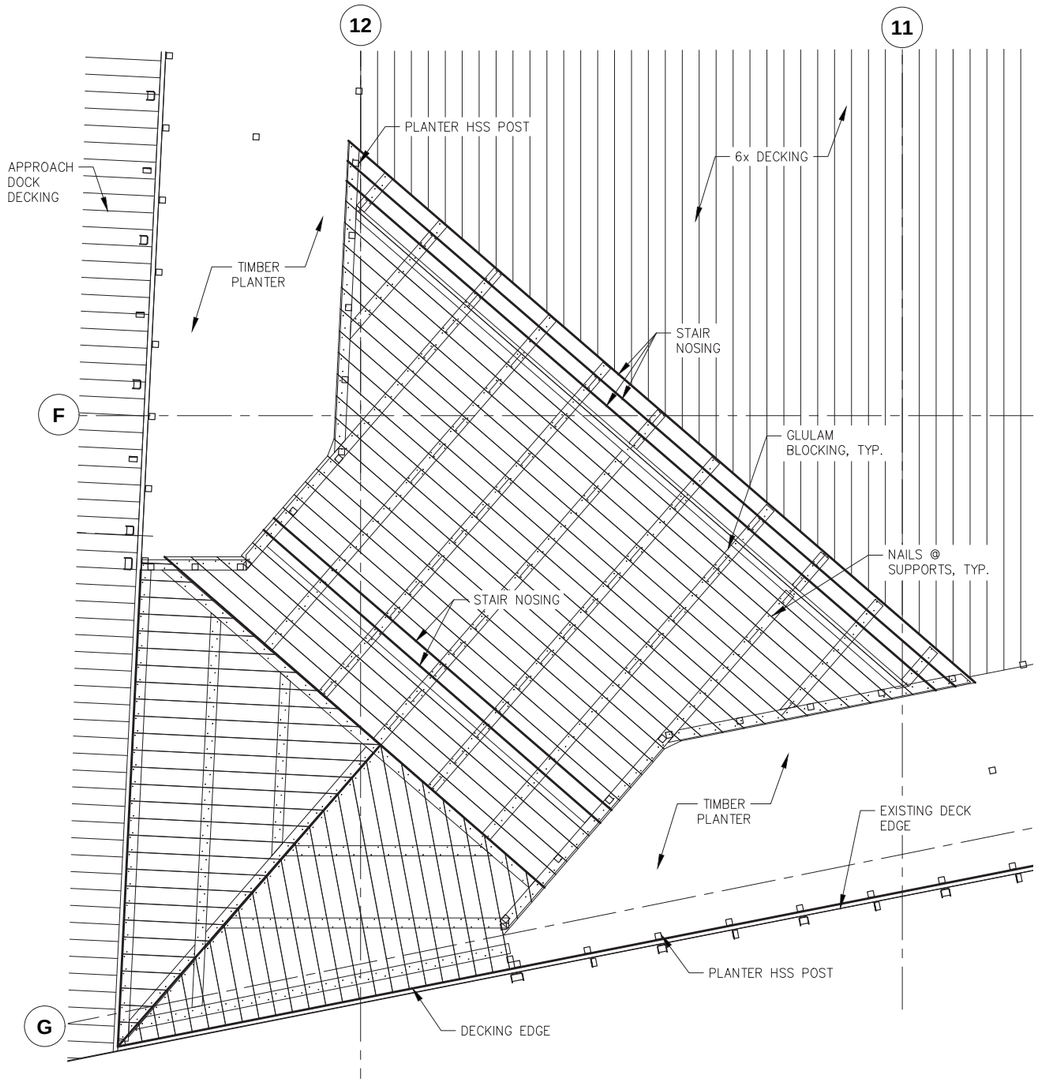

2 - **TIMBER DECKING PLAN**

NOTE: OVER FRAMING DECKING IS 4x TIMBER

CITY & BOROUGH OF JUNEAU — DOCKS & HARBORS

REVISIONS

REV.	DATE	DESCRIPTION	DWN.	CKD.	APP.

P N D ENGINEERS, INC.
9360 Glacier Highway Ste 100
Juneau, Alaska 99801
Phone: 907-586-2093
Fax: 907-586-2099
www.pndengineers.com

STATE OF ALASKA — 49 TH — Charles R. Somerville CE-8845 — REGISTERED PROFESSIONAL ENGINEER

DESIGN: MDS CHECKED: CRS
DRAWN: KLL APPROVED: CRS
SCALE: SCALE IN FEET 0 10 20 FT.
DATE: 5/23/2019

DOWNTOWN WATERFRONT IMPROVEMENTS PHASE I
CBJ CONTRACT NO. DH19-014

SHEET TITLE: **TIMBER DECK OVER FRAMING**

PND PROJECT NO.: 182045 C.A.N. NO.: AECC250

S3.04

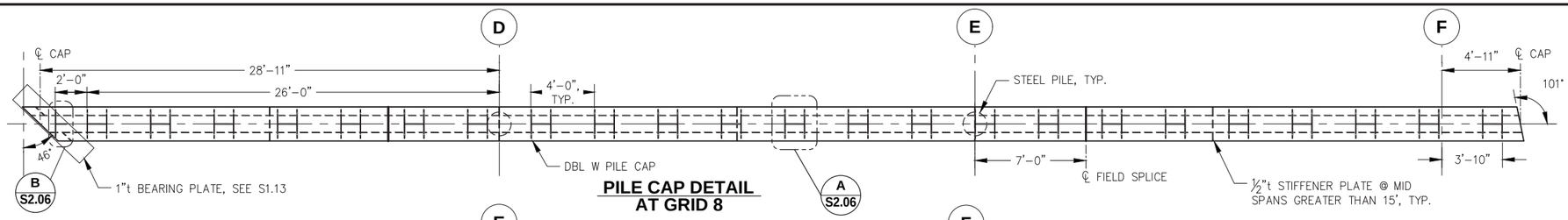

PILE CAP DETAIL AT GRID 8

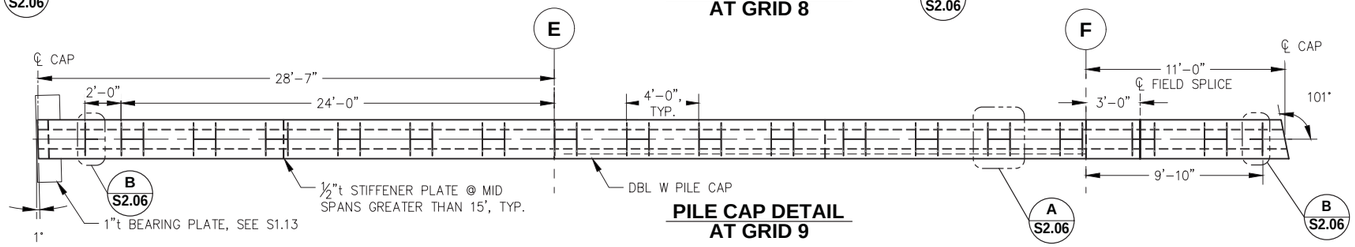

PILE CAP DETAIL AT GRID 9

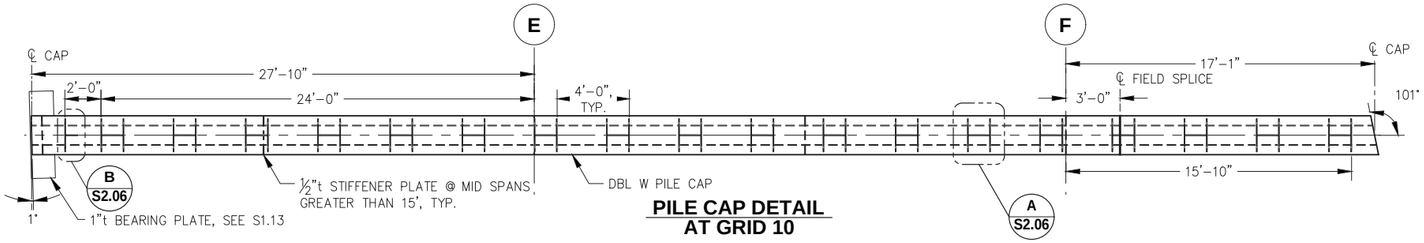

PILE CAP DETAIL AT GRID 10

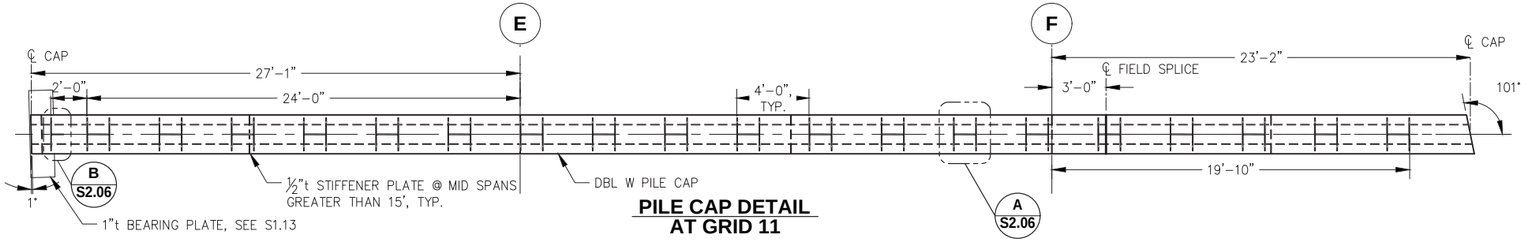

PILE CAP DETAIL AT GRID 11

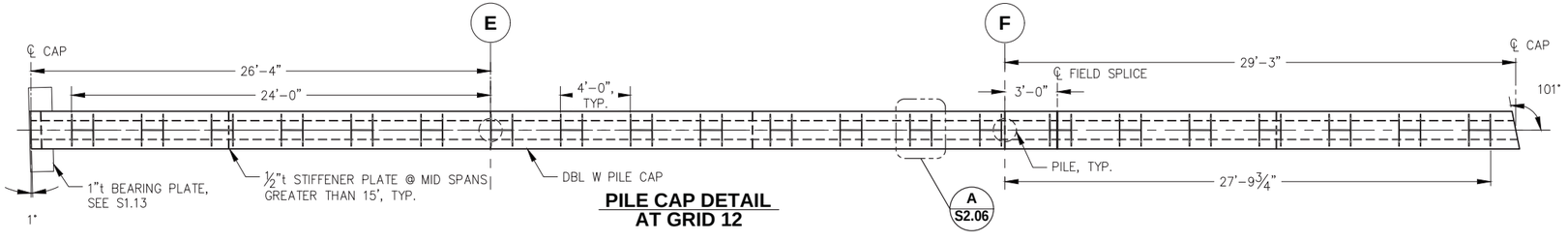

PILE CAP DETAIL AT GRID 12

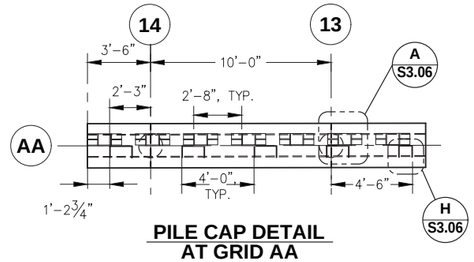

PILE CAP DETAIL AT GRID AA

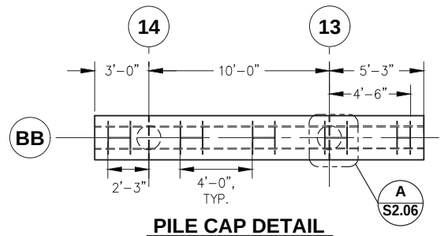

PILE CAP DETAIL AT GRID BB

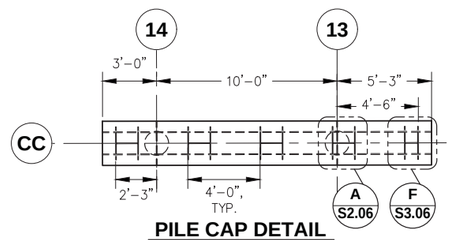

PILE CAP DETAIL AT GRID CC

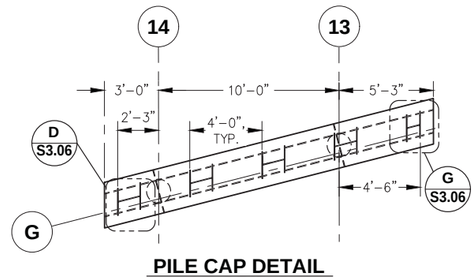

PILE CAP DETAIL AT GRID G

NOTE:
1. SHOP SPLICE AS REQUIRED FOR SECTIONS TO FIT IN GALVANIZING TANKS.
2. ALL PLATE DIMENSIONS ARE TO THE OUTSIDE OF SIDE PLATE, UNLESS NOTED OTHERWISE
3. ALL PILE CAPS ARE DBL W24x131, UNLESS OTHERWISE NOTED
4. ONE STIFFENER PLATE SHALL BE LOCATED AT ℄ EACH PILE, AND ONE PLATE AT MIDSPAN BETWEEN PILES AT PILE SPACING GREATER THAN 15' O.C.

CITY & BOROUGH OF JUNEAU — DOCKS & HARBORS

REVISIONS

REV.	DATE	DESCRIPTION	DWN.	CKD.	APP.

P N D ENGINEERS, INC.
9360 Glacier Highway Ste 100
Juneau, Alaska 99801
Phone: 907-586-2093
Fax: 907-586-2099
www.pndengineers.com

DESIGN: MDS CHECKED: CRS
DRAWN: KLL APPROVED: CRS
SCALE: SCALE IN FEET 0 10 20 FT.

STATE OF ALASKA 49TH — Charles R. Somerville CE-8845 REGISTERED PROFESSIONAL ENGINEER
DATE: 5/23/2019

DOWNTOWN WATERFRONT IMPROVEMENTS PHASE I
CBJ CONTRACT NO. DH19-014

SHEET TITLE: **PILE CAP PLAN**

S3.05

PND PROJECT NO.: 182045 C.A.N. NO.: AECC250

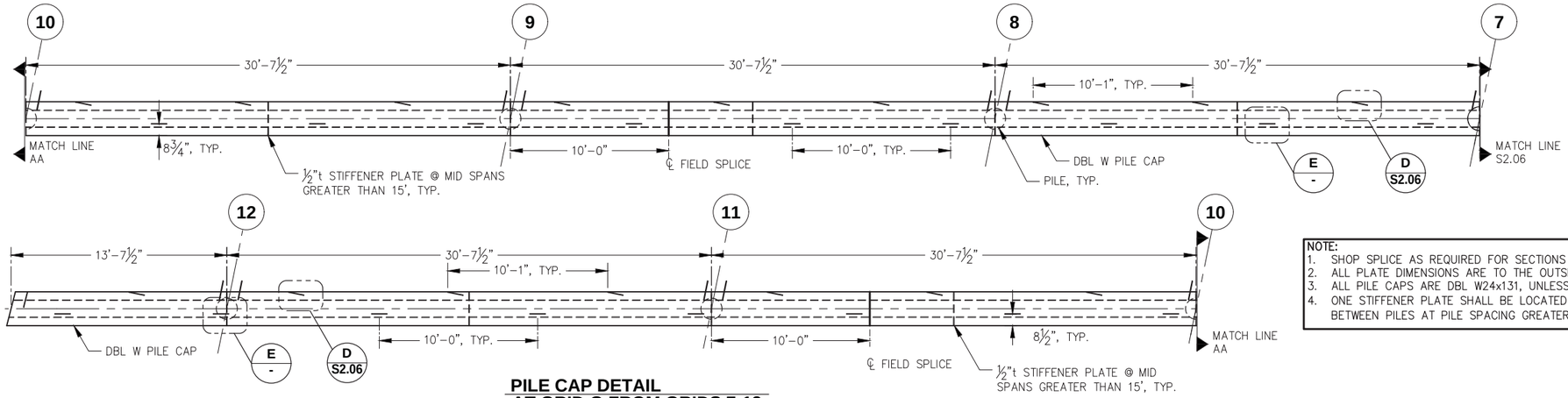

PILE CAP DETAIL
AT GRID G FROM GRIDS 7-12

NOTE:
1. SHOP SPLICE AS REQUIRED FOR SECTIONS TO FIT IN GALVANIZING TANKS.
2. ALL PLATE DIMENSIONS ARE TO THE OUTSIDE OF SIDE PLATE, UNLESS NOTED OTHERWISE
3. ALL PILE CAPS ARE DBL W24x131, UNLESS OTHERWISE NOTED
4. ONE STIFFENER PLATE SHALL BE LOCATED AT ℄ EACH PILE, AND ONE PLATE AT MIDSPAN BETWEEN PILES AT PILE SPACING GREATER THAN 15' O.C.

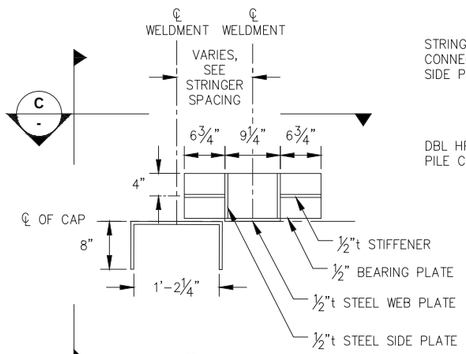

A - **GRID AA PLAN**

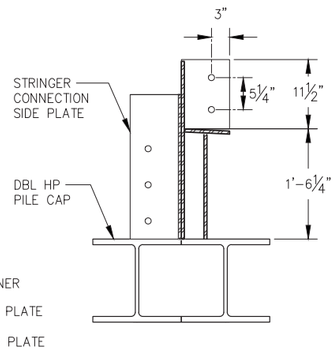

B - **GRID AA CAP SECTION**

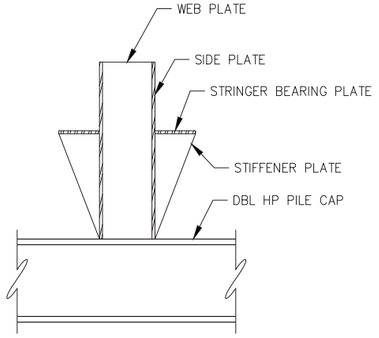

C - **GRID AA CAP ELEVATION**

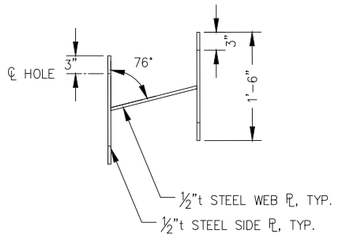

D - **STRINGER CONNECTION**

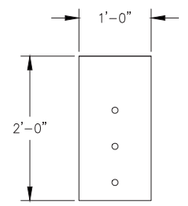

E - **BLOCKING CONNECTION PLATE**

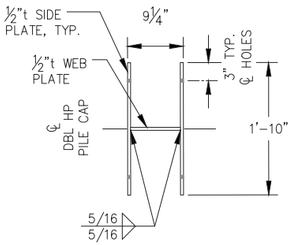

F - **STRINGER CONNECTION**

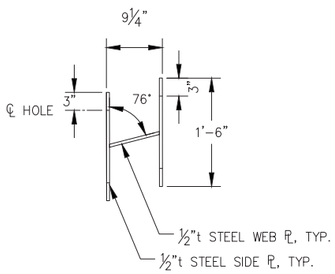

G - **STRINGER CONNECTION**

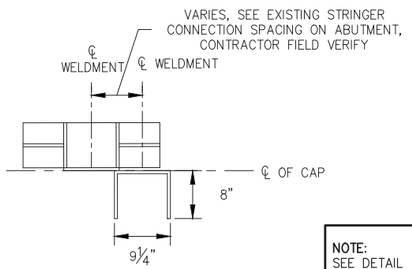

H - **STRINGER CONNECTION**

NOTE:
SEE DETAIL A - FOR DETAILS NOT CALLED OUT

REVISIONS

REV.	DATE	DESCRIPTION	DWN.	CKD.	APP.

P N D ENGINEERS, INC.
9360 Glacier Highway Ste 100
Juneau, Alaska 99801
Phone: 907-586-2093
Fax: 907-586-2099
www.pndengineers.com

DESIGN: MDS CHECKED: CRS
DRAWN: KLL APPROVED: CRS
SCALE: SCALE IN FEET 0 10 20 FT.
DATE: 5/23/2019

STATE OF ALASKA 49 TH Charles R. Somerville CE-8845 REGISTERED PROFESSIONAL ENGINEER

DOWNTOWN WATERFRONT IMPROVEMENTS
PHASE I
CBJ CONTRACT NO. DH19-014

SHEET TITLE: **PILE CAP PLAN**

S3.06

PND PROJECT NO.: 182045 C.A.N. NO.: AECC250

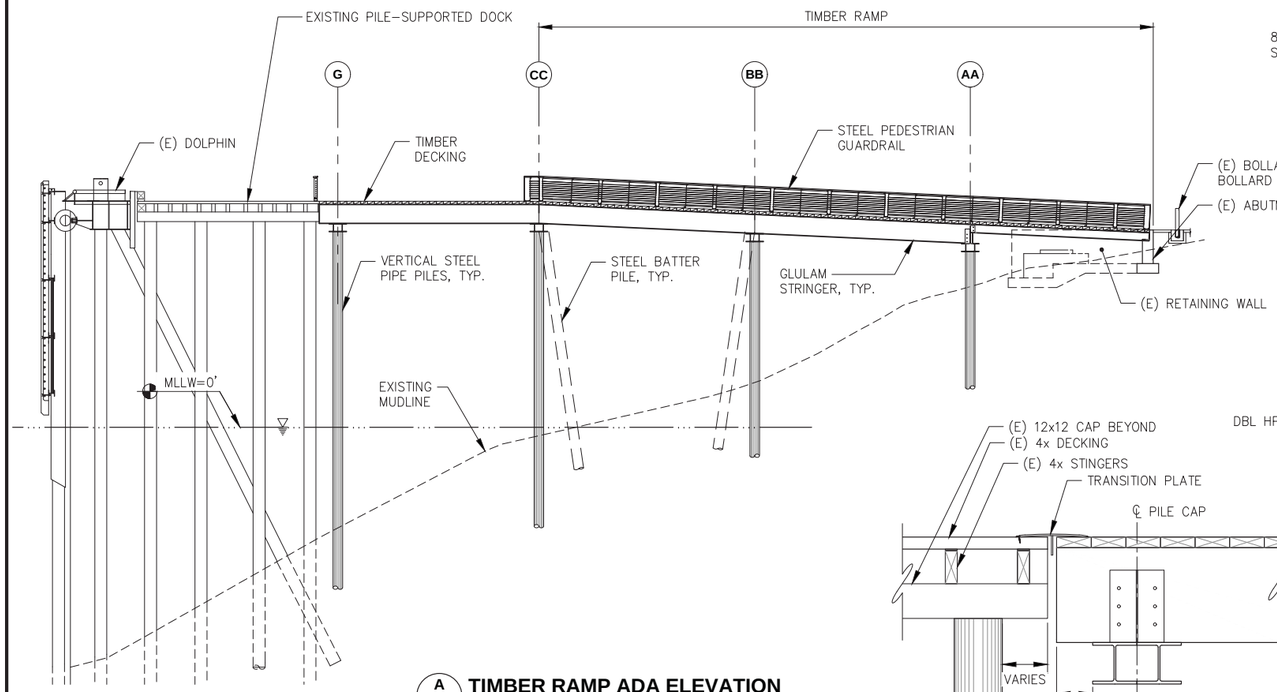

A S3.01 TIMBER RAMP ADA ELEVATION

B S3.03 DOCK SECTION AT RAMP AND SEAWALK, TYP.

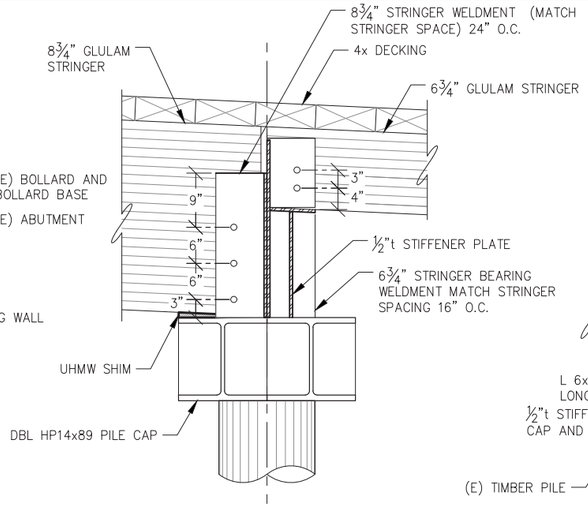

C - RAMP PILE CAP DETAIL AT STRINGER CHANGE

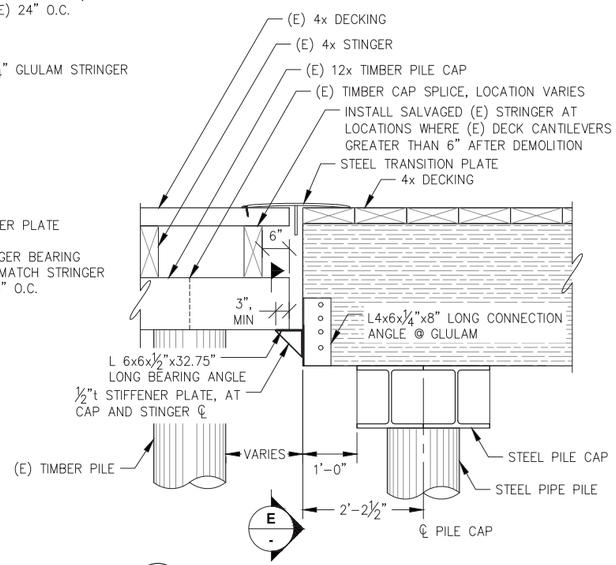

D S3.03 APPROACH DOCK CONNECTION TO EXISTING PILE CAP DETAIL
(3) REQUIRED, LOCATE AT EACH EXISTING PILE CAP.

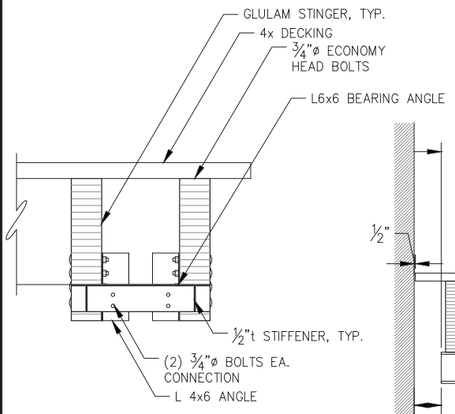

NOTE: LOCATE ANGLE FOR FULL BEARING OF EXITING PILE CAP ADJUST VERTICALLY AND HORIZONTALLY AS NEEDED.

E - APPROACH DOCK CONNECTION TO EXISTING DETAIL

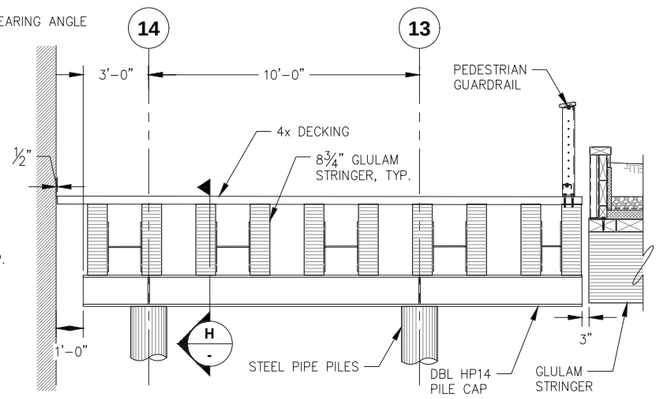

F S3.03 RAMP SECTION AT 8 3/4" GLULAM BEAM

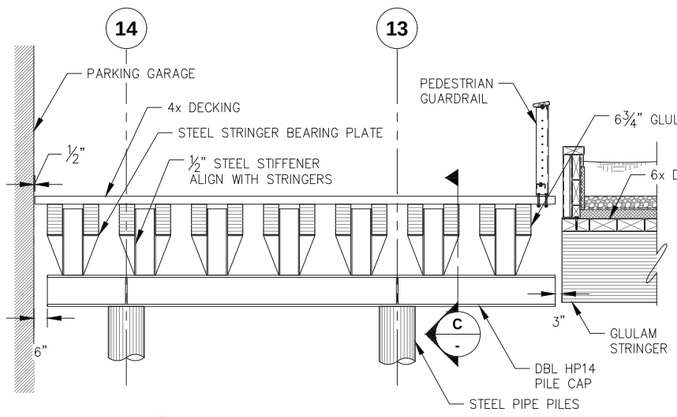

G S3.03 RAMP SECTION AT 6 3/4" GLULAM BEAM

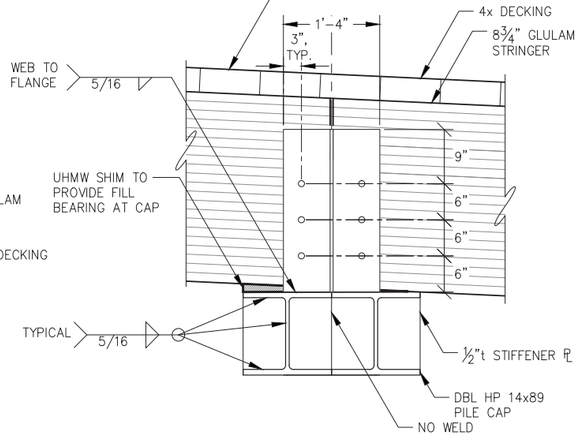

H S3.03 TYPICAL RAMP PILE CAP SECTION

REVISIONS

REV.	DATE	DESCRIPTION	DWN.	CKD.	APP.

CITY & BOROUGH OF JUNEAU — DOCKS & HARBORS

PND ENGINEERS, INC.
9360 Glacier Highway Ste 100
Juneau, Alaska 99801
Phone: 907-586-2093
Fax: 907-586-2099
www.pndengineers.com

DESIGN: MDS CHECKED: CRS
DRAWN: KLL APPROVED: CRS
SCALE: SCALE IN FEET 0 10 20 FT.

STATE OF ALASKA 49TH — Charles R. Somerville CE-8845 REGISTERED PROFESSIONAL ENGINEER
DATE: 5/23/2019

DOWNTOWN WATERFRONT IMPROVEMENTS PHASE I
CBJ CONTRACT NO. DH19-014

SHEET TITLE: **ADA APPROACH RAMP ELEVATION AND SECTION**

PND PROJECT NO.: 182045 C.A.N. NO.: AECC250

S3.07

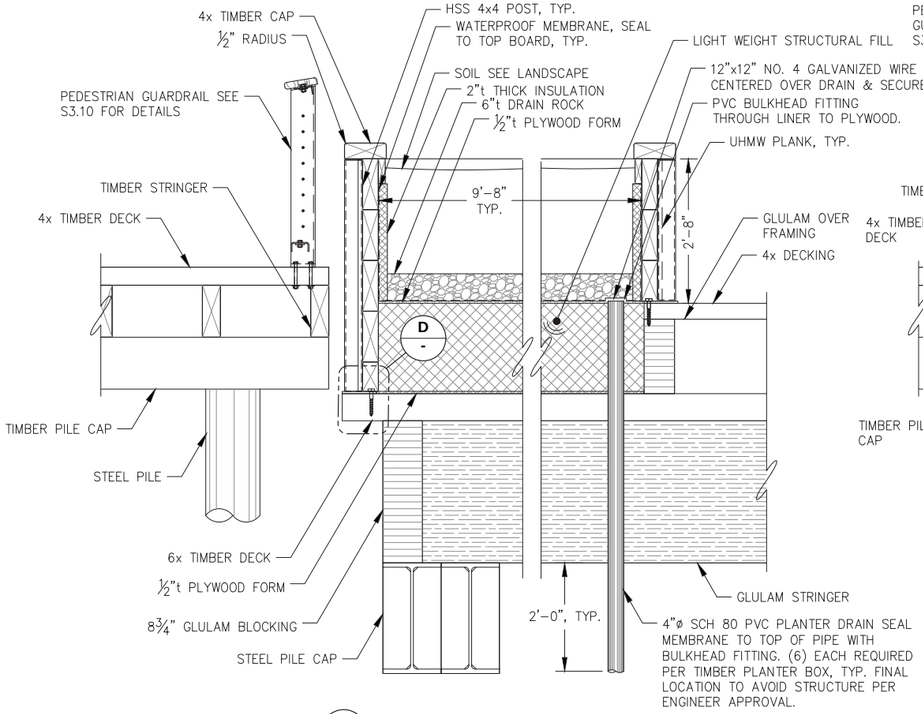

A / S3.04 DOCK SECTION AT WITH LIGHT WEIGHT FILL

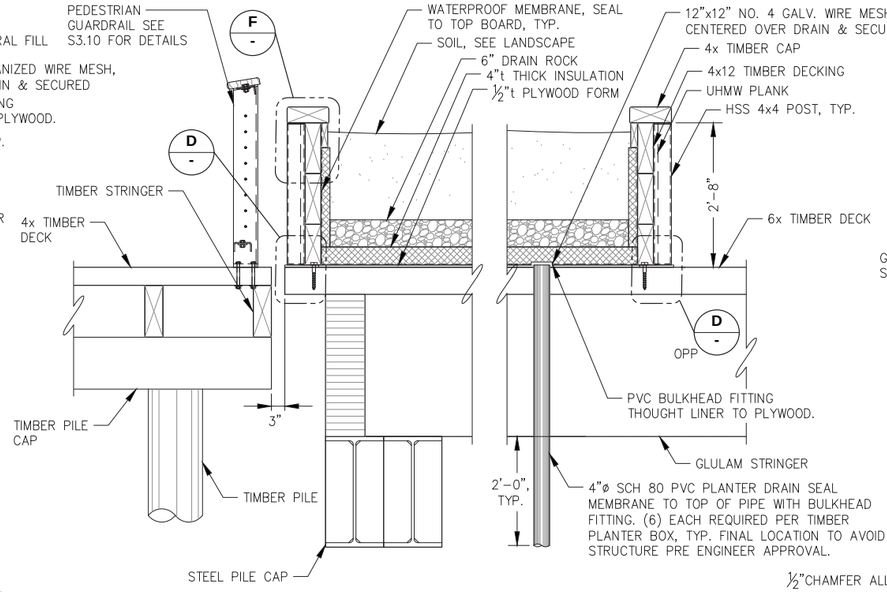

B / S3.04 DOCK SECTION AT SEA WALK RAMP

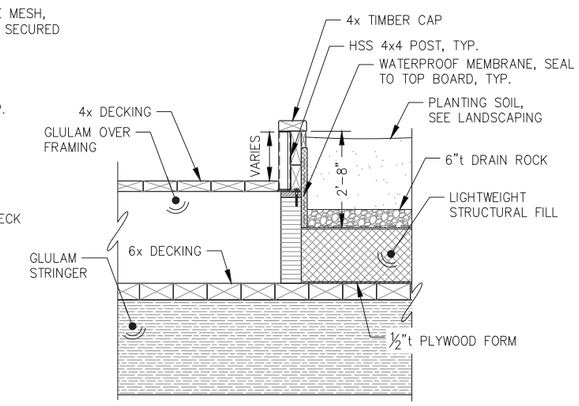

C / S3.04 PLANTER SECTION THROUGH OVER FRAMING

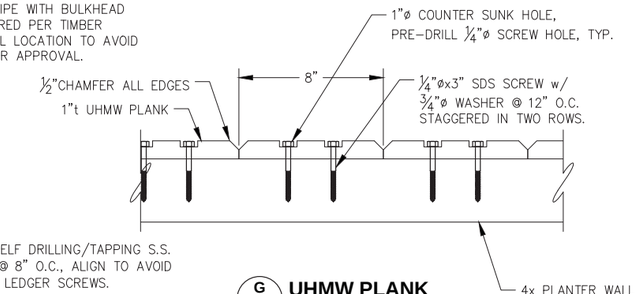

G / - UHMW PLANK SECTION

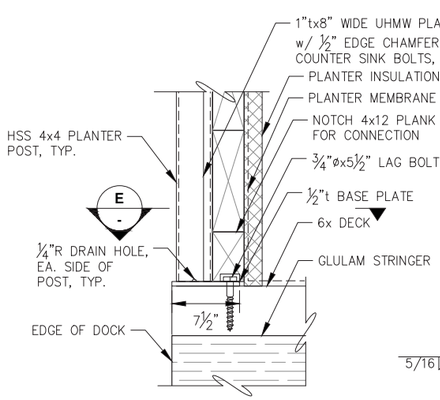

D / - PLANTER POST CONNECTION

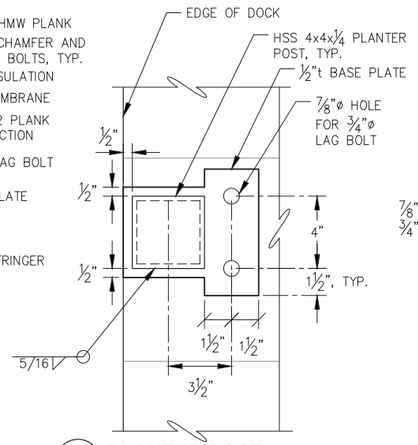

E / - PLANTER POST BASE PLATE DETAIL

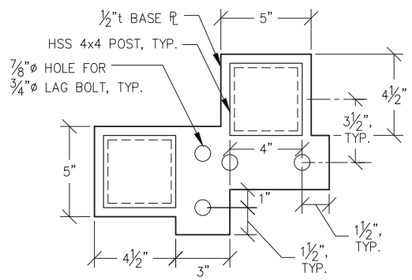

G / - PLANTER POST BASE PLATE AT CORNER

NOTE: PLANTER WALL NOT SHOWN FOR CLARITY

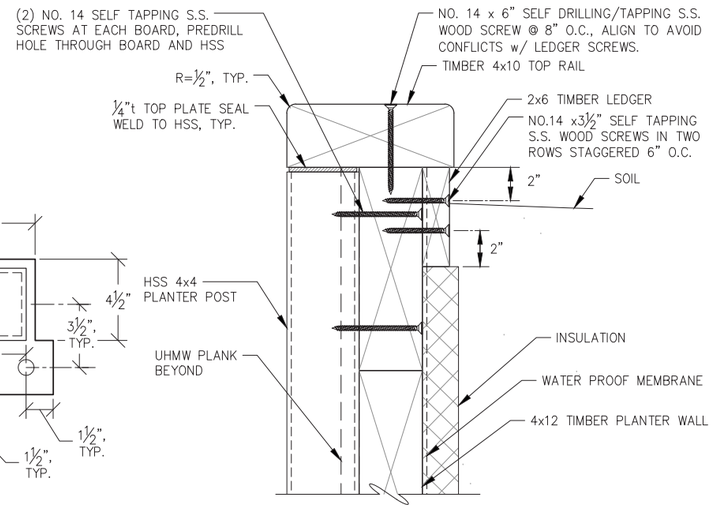

F / - TOP OF PLANTER WALL DETAIL

REVISIONS

REV.	DATE	DESCRIPTION	DWN.	CKD.	APP.

PND ENGINEERS, INC.
9360 Glacier Highway Ste 100
Juneau, Alaska 99801
Phone: 907-586-2093
Fax: 907-586-2099
www.pndengineers.com

DESIGN: MDS CHECKED: CRS
DRAWN: KLL APPROVED: CRS
SCALE: NTS
DATE: 5/23/2019

STATE OF ALASKA 49TH — Charles R. Somerville CE-8845 REGISTERED PROFESSIONAL ENGINEER

DOWNTOWN WATERFRONT IMPROVEMENTS PHASE I
CBJ CONTRACT NO. DH19-014

SHEET TITLE: **TIMBER DECK SECTIONS AND DETAILS**

PND PROJECT NO.: 182045 C.A.N. NO.: AECC250

S3.08

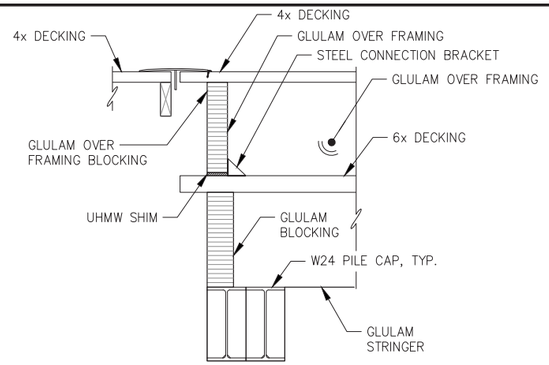

A S3.04 **OVER FRAMING SECTION AT SEAWALK**

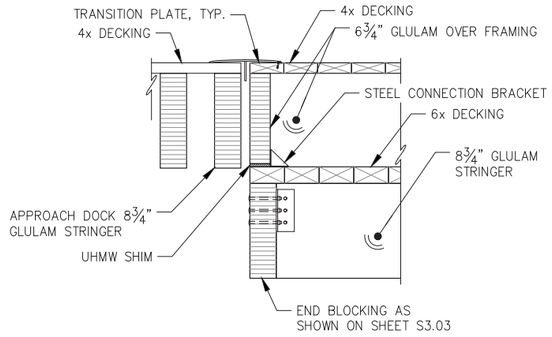

B S3.04 **OVERFRAMING SECTION AT APPROACH RAMP**

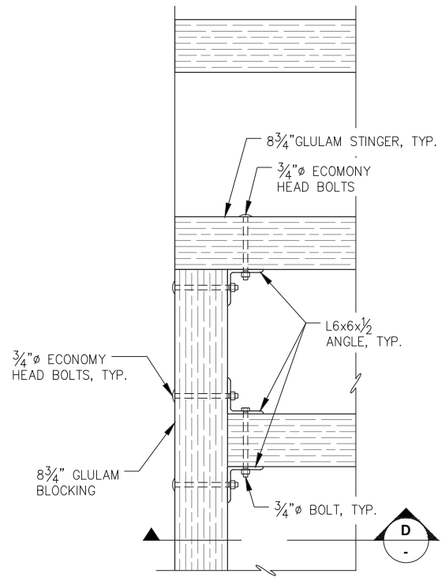

C S3.04 **EDGE BLOCKING CONNECTION SECTION**

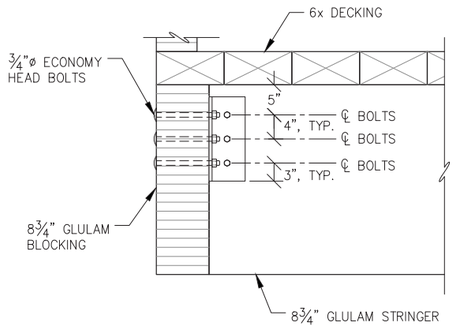

D - **EDGE BLOCKING CONNECTION PLAN**

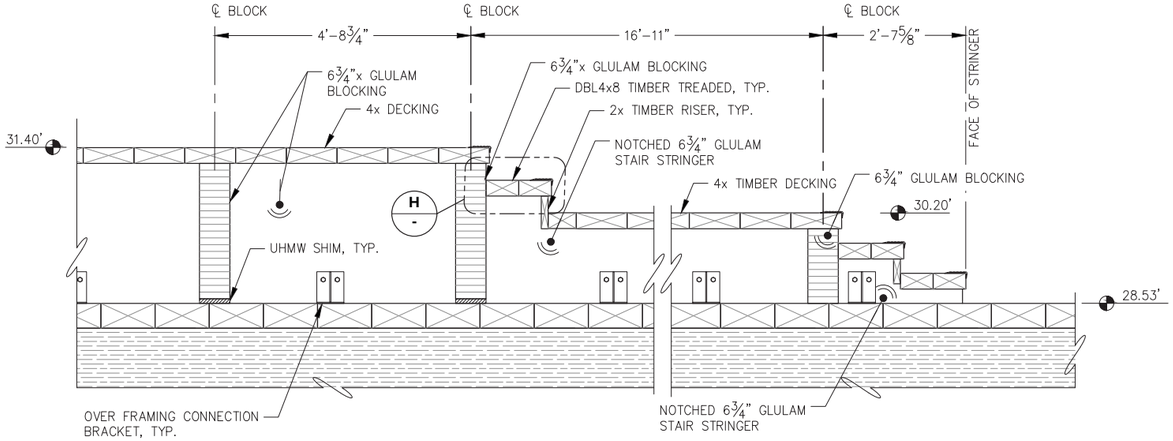

E S3.04 **OVERFRAMING STAIR SECTION**

NOTE:
1. NOTCH STRINGERS PRIOR TO PRESSURE TREATING TIMBER
2. PROVIDE UHMW SHIMS AS REQUIRED TO MATCH (E) DECK ELEVATIONS.

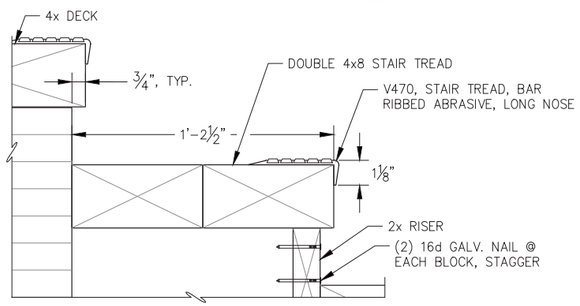

H - **STAIR NOSING DETAIL**

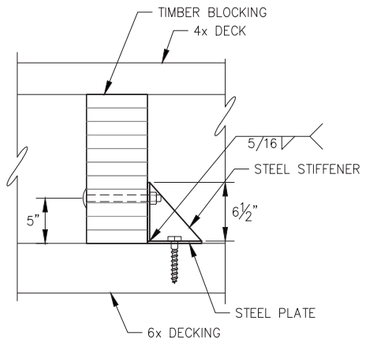

F - **TYPICAL OVER FRAMING CONNECTION SECTION**

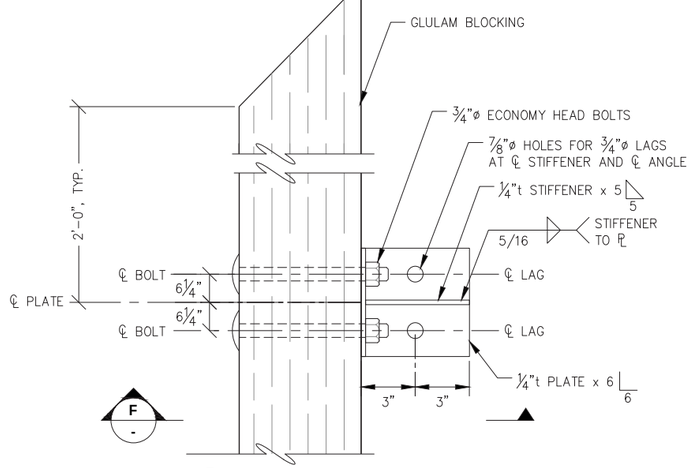

G S3.04 **TYPICAL OVER FRAMING CONNECTION PLAN**

REVISIONS

REV.	DATE	DESCRIPTION	DWN.	CKD.	APP.

CITY & BOROUGH OF JUNEAU DOCKS & HARBORS

PND ENGINEERS, INC.
9360 Glacier Highway Ste 100
Juneau, Alaska 99801
Phone: 907-586-2093
Fax: 907-586-2099
www.pndengineers.com

DESIGN: MDS CHECKED: CRS
DRAWN: KLL APPROVED: CRS
SCALE: NTS

STATE OF ALASKA 49TH — Charles R. Somerville CE-8845 REGISTERED PROFESSIONAL ENGINEER
DATE: 5/23/2019

DOWNTOWN WATERFRONT IMPROVEMENTS PHASE I
CBJ CONTRACT NO. DH19-014

SHEET TITLE: **TIMBER OVER FRAMING DETAILS**

PND PROJECT NO.: 182045 C.A.N. NO.: AECC250

S3.09

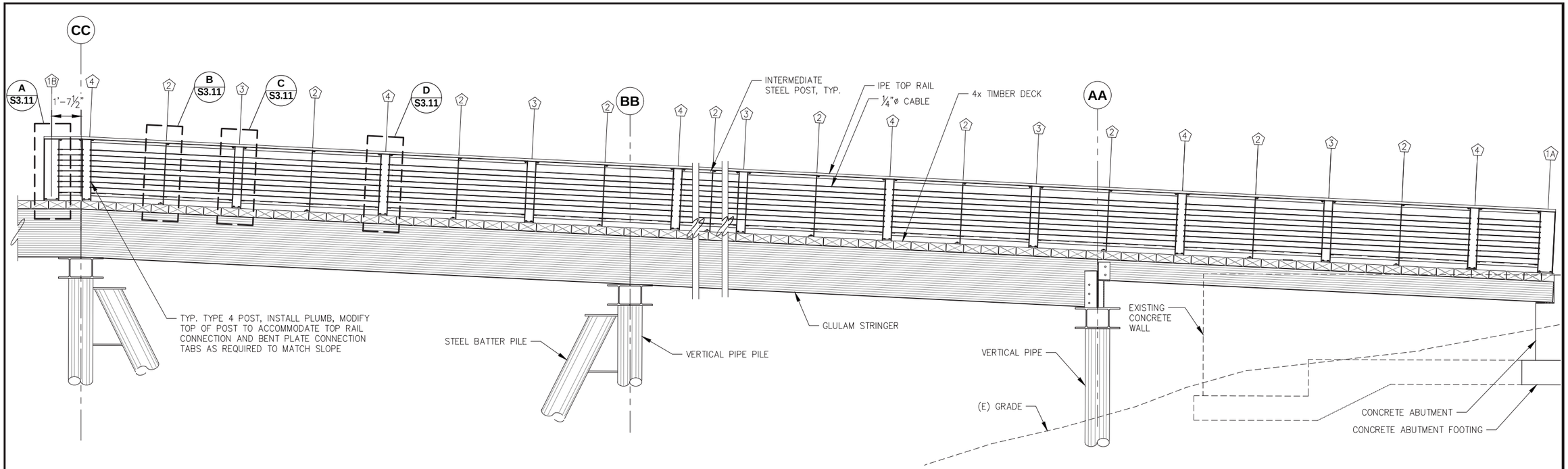

A S3.01 ADA APPROACH RAMP PEDESTRIAN GUARDRAIL ELEVATION

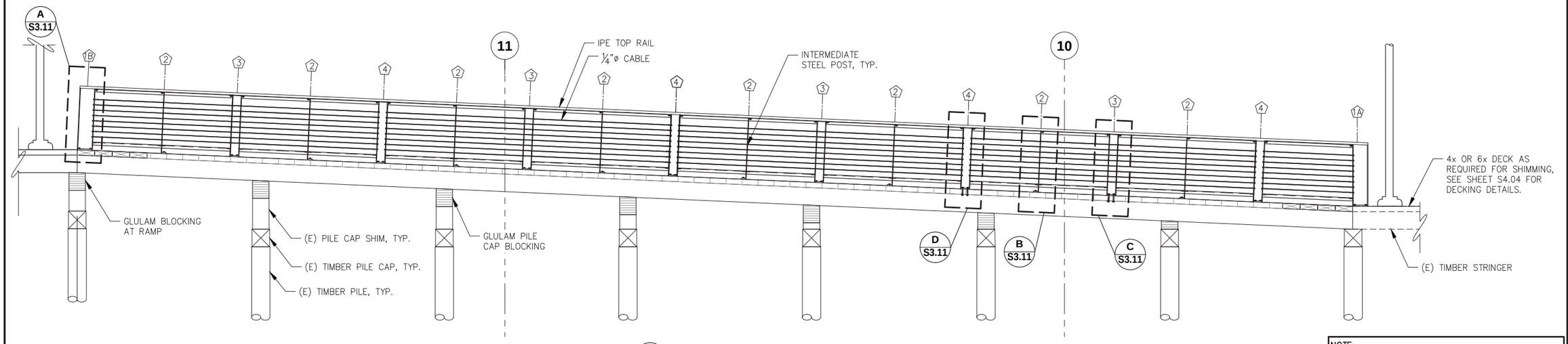

B S3.01 SEAWALK RAMP PEDESTRIAN GUARDRAIL ELEVATION

NOTE:
1. (#) INDICATES STEEL POST TYPE. SEE SHEET S3.11 FOR POST DETAILS

CITY & BOROUGH OF JUNEAU DOCKS & HARBORS

REVISIONS

REV.	DATE	DESCRIPTION	DWN.	CKD.	APP.

PND ENGINEERS, INC.
9360 Glacier Highway Ste 100
Juneau, Alaska 99801
Phone: 907-586-2093
Fax: 907-586-2099
www.pndengineers.com

DESIGN: MDS CHECKED: CRS
DRAWN: KLL APPROVED: CRS
SCALE: SCALE IN FEET 0 10 20 FT.

STATE OF ALASKA 49TH Charles R. Somerville CE-8845 REGISTERED PROFESSIONAL ENGINEER
DATE: 5/23/2019

DOWNTOWN WATERFRONT IMPROVEMENTS PHASE I
CBJ CONTRACT NO. DH19-014

SHEET TITLE: **PEDESTRIAN GUARDRAIL ELEVATION**

PND PROJECT NO.: 182045 C.A.N. NO.: AECC250

S3.10

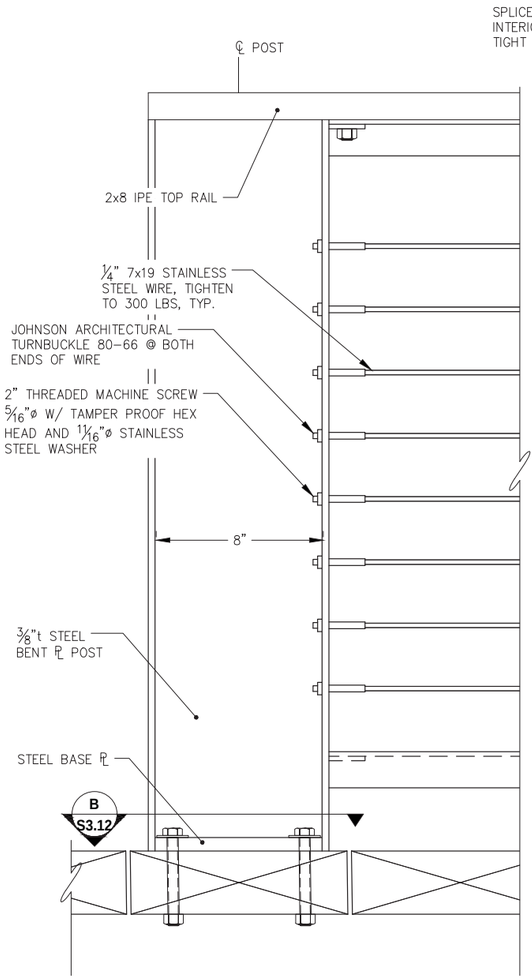

A - POST TYPE 1B 1A (OPP HAND) ELEVATION

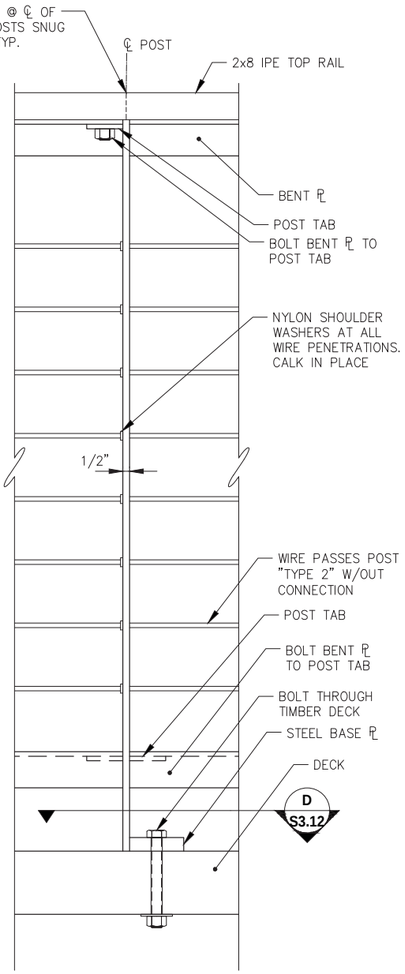

B - POST TYPE 2 ELEVATION

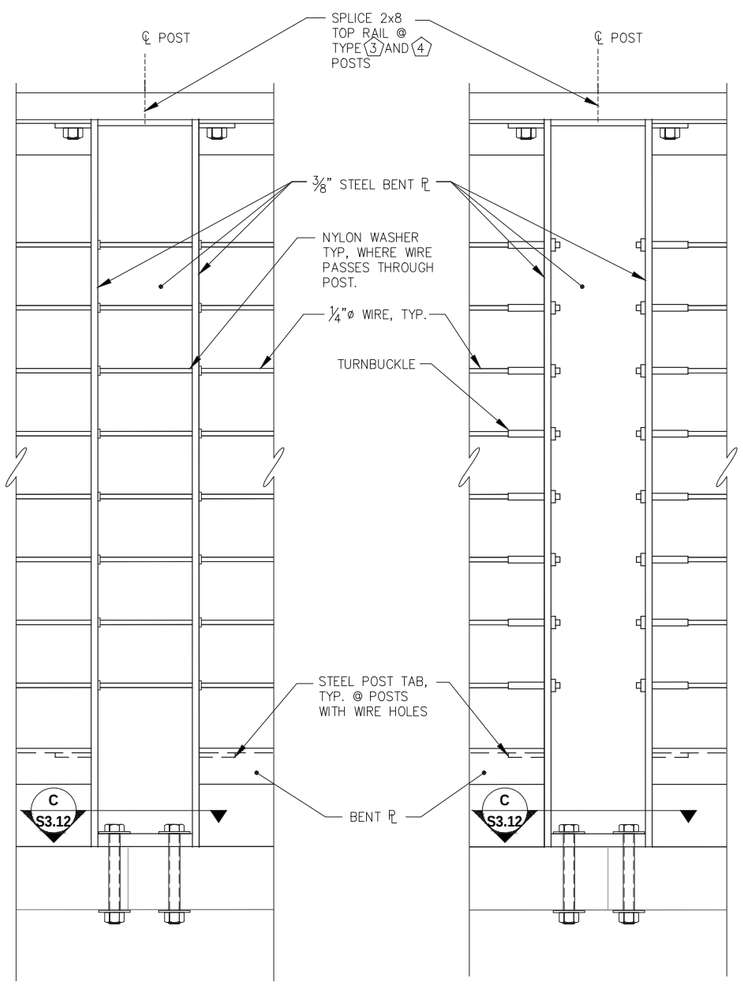

C - POST TYPE 3 ELEVATION

D - POST TYPE 4 ELEVATION

TYPE	TAB & HOLE LOCATIONS	NOTES
1A	RIGHT SIDE ONLY	CABLE PENETRATE RIGHT SIDE WITH TURNBUCKLES, SEE A/–
1B	LEFT SIDE ONLY	CABLE PENETRATE LEFT SIDE WITH TURNBUCKLES, SEE A/– SIM
2	BOTH SIDES	CABLE PENETRATE BOTH SIDE NO TURNBUCKLES, SEE DETAIL B/–
3	BOTH SIDES	CABLE PENETRATE BOTH SIDE NO TURNBUCKLES, SEE DETAIL C/–
4	BOTH SIDES	CABLE PENETRATE AND TURNBUCKLES BOTH SIDE, SEE DETAIL D/–

GUARD RAIL NOTES:

1. INSTALL POST PERPENDICULAR TO DECK, TOP RAIL, FOOTRAIL, AND CABLES TO FOLLOW DECK SLOPE.
2. HOT DIP GALVANIZE ENTIRE POST AND ALL METAL RAILING ASSEMBLIES AFTER FABRICATION. ALL WELDS TO BE GROUND SMOOTH AND ALL METAL EDGES DEBURRED AND LIGHTLY ROUNDED PRIOR TO GALVANIZING.
3. PROVIDE NYLON WASHERS AT ALL CABLE PENETRATIONS. CAULK SHOULDER WASHERS IN PLACE AT PENETRATIONS. PROVIDE NYLON SHOULDER WASHERS AND NYLON WASHERS UNDER TURNBUCKLE AND TERMINATION CONNECTIONS.
4. CUT TOP RAIL, BENT PLATES, AND WIRE TO FIT POST SPACING DETERMINED IN THE FIELD. FIELD TREAT ANY TIMBER FIELD CUT WITH AN APPROVED WOOD PRESERVATIVE TREATMENT. FIELD GALVANIZE ALL CUT OR FIELD WELDED MEMBERS WITH APPROVED GALVANIZING TECHNIQUE.
5. USE 3M 4200 FAST CURE MARINE SEALANT WHERE CAULKING IS CALLED FOR.
6. AT LOCATIONS WHERE EXISTING STRINGER BELOW DECKING PREVENTS THROUGH BOLTING, SUBSTITUTE ⅝"ø x 8" LAG BOLTS

CITY & BOROUGH OF JUNEAU DOCKS & HARBORS

REVISIONS

REV.	DATE	DESCRIPTION	DWN.	CKD.	APP.

PND ENGINEERS, INC.
9360 Glacier Highway Ste 100
Juneau, Alaska 99801
Phone: 907-586-2093
Fax: 907-586-2099
www.pndengineers.com

DESIGN: MDS CHECKED: CRS
DRAWN: KLL APPROVED: CRS
SCALE: SCALE IN FEET 0 10 20 FT.

STATE OF ALASKA 49TH Charles R. Somerville CE-8845 REGISTERED PROFESSIONAL ENGINEER
DATE: 5/23/2019

DOWNTOWN WATERFRONT IMPROVEMENTS PHASE I
CBJ CONTRACT NO. DH19-014

SHEET TITLE: **PEDESTRIAN GUARDRAIL DETAILS**

S3.11

PND PROJECT NO.: 182045 C.A.N. NO.: AECC250

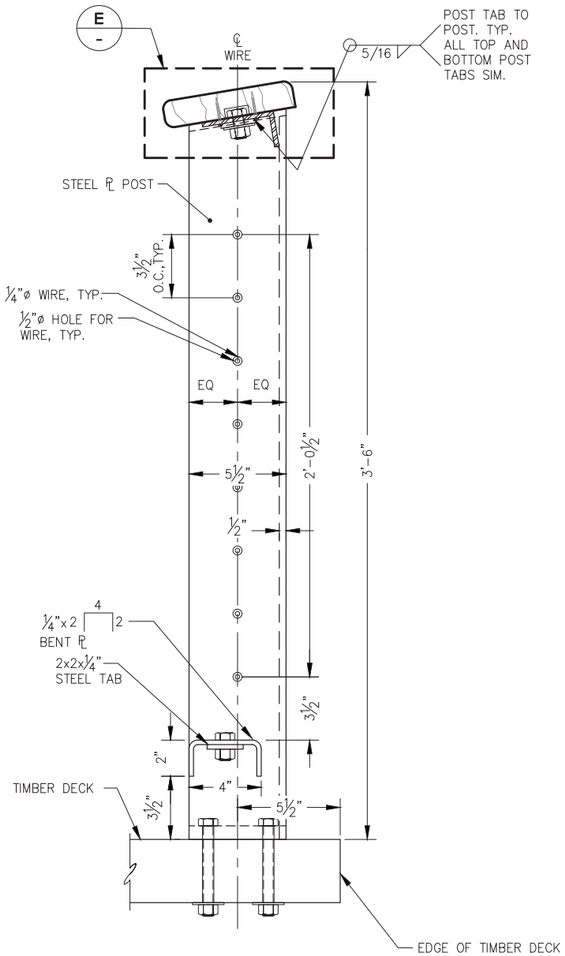

A - TYPICAL POST SECTION

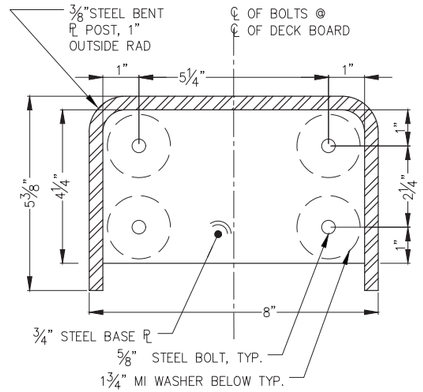

B S3.11 **POST BASE PLATE TYPE** 1A & 1B

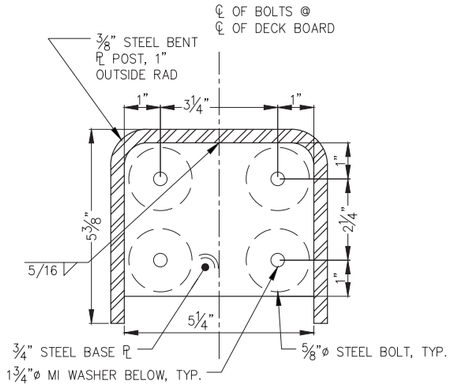

C S3.11 **POST BASE PLATE TYPE** 3, 4, 5A & 5B

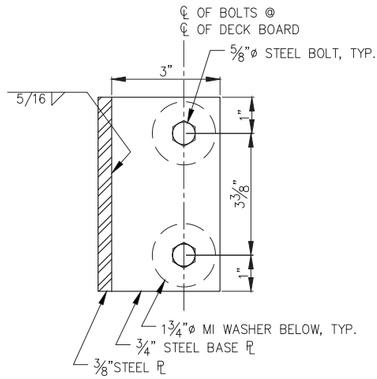

D S3.11 **POST BASE PLATE TYPE** 2

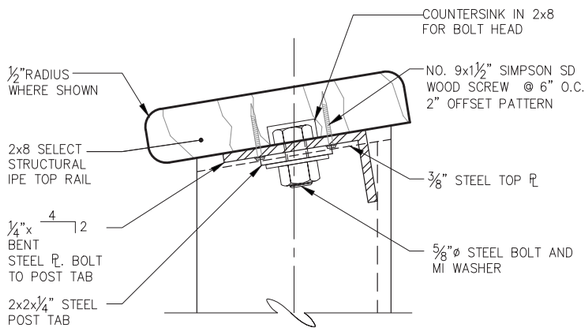

E - **TOP RAIL DETAIL**

REVISIONS

REV.	DATE	DESCRIPTION	DWN.	CKD.	APP.

P N D ENGINEERS, INC.
9360 Glacier Highway Ste 100
Juneau, Alaska 99801
Phone: 907-586-2093
Fax: 907-586-2099
www.pndengineers.com

DESIGN: MDS CHECKED: CRS
DRAWN: KLL APPROVED: CRS
SCALE: SCALE IN FEET 0 10 20 FT.

STATE OF ALASKA 49TH Charles R. Somerville CE-8845 REGISTERED PROFESSIONAL ENGINEER
DATE: 5/23/2019

DOWNTOWN WATERFRONT IMPROVEMENTS PHASE I
CBJ CONTRACT NO. DH19-014

SHEET TITLE: **PEDESTRIAN GUARDRAIL SECTION AND DETAILS**

PND PROJECT NO.: 182045 C.A.N. NO.: AECC250

S3.12

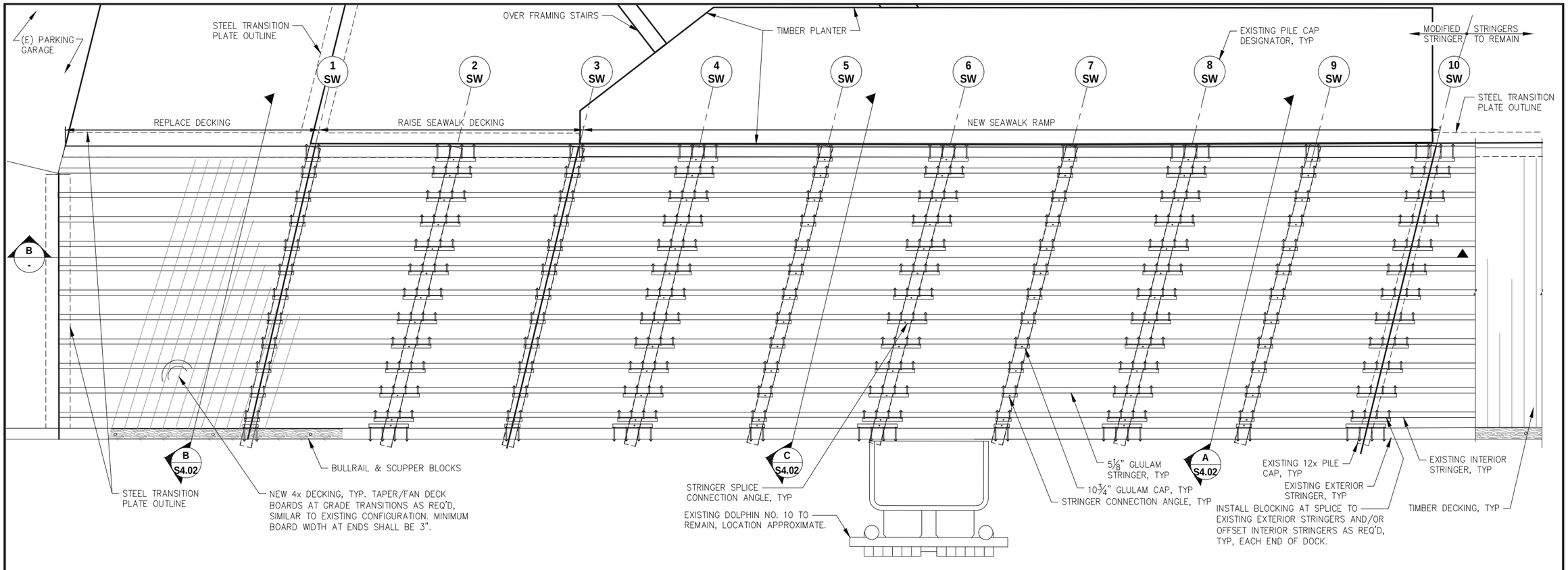

A S3.01 **DOCK MODIFICATIONS PLAN**

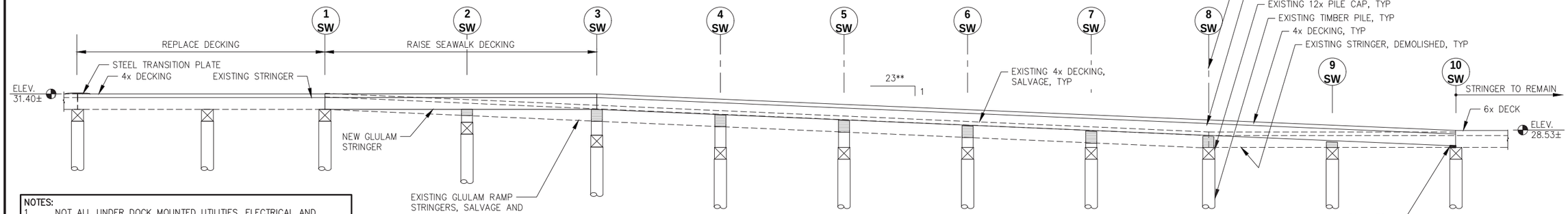

B - **DOCK MODIFICATIONS PROFILE**

**APPROXIMATE SLOPE
NOTE: NOT ALL REQUIRED COMPONENTS SHOWN THIS VIEW.

NOTES:
1. NOT ALL UNDER DOCK MOUNTED UTILITIES, ELECTRICAL AND APPURTENANCES SHOWN. FIELD CONFIRM ACTUAL SITE CONDITIONS.
2. DOCK ELEVATION APPROXIMATE VERIFY IN FIELD.
3. **APPROXIMATE SLOPE
4. NOT ALL REQUIRED COMPONENTS SHOWN THIS VIEW.

CITY & BOROUGH OF JUNEAU DOCKS & HARBORS

REVISIONS

REV.	DATE	DESCRIPTION	DWN.	CKD.	APP.

PND ENGINEERS, INC.
9360 Glacier Highway Ste 100
Juneau, Alaska 99801
Phone: 907-586-2093
Fax: 907-586-2099
www.pndengineers.com

DESIGN: BMI CHECKED: CRS
DRAWN: BMI APPROVED: CRS
SCALE: NTS

STATE OF ALASKA 49TH Charles R. Somerville CE-8845 REGISTERED PROFESSIONAL ENGINEER
DATE: 5/23/2019

DOWNTOWN WATERFRONT IMPROVEMENTS PHASE I
CBJ CONTRACT NO. DH19-014

SHEET TITLE: **SEAWALK MODIFICATIONS PLAN / ELEVATION**

PND PROJECT NO.: 182045 C.A.N. NO.: AECC250

S4.01

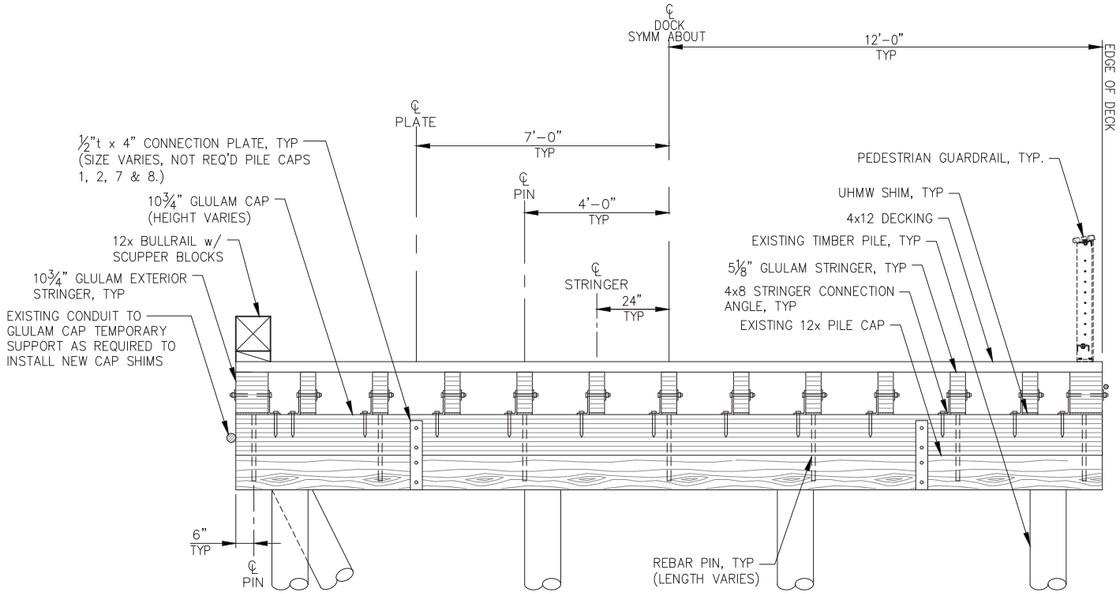

A S4.01 TYPICAL RAMP SHIM SECTION AT LOCATIONS WITH OUT EXISTING SHIMS

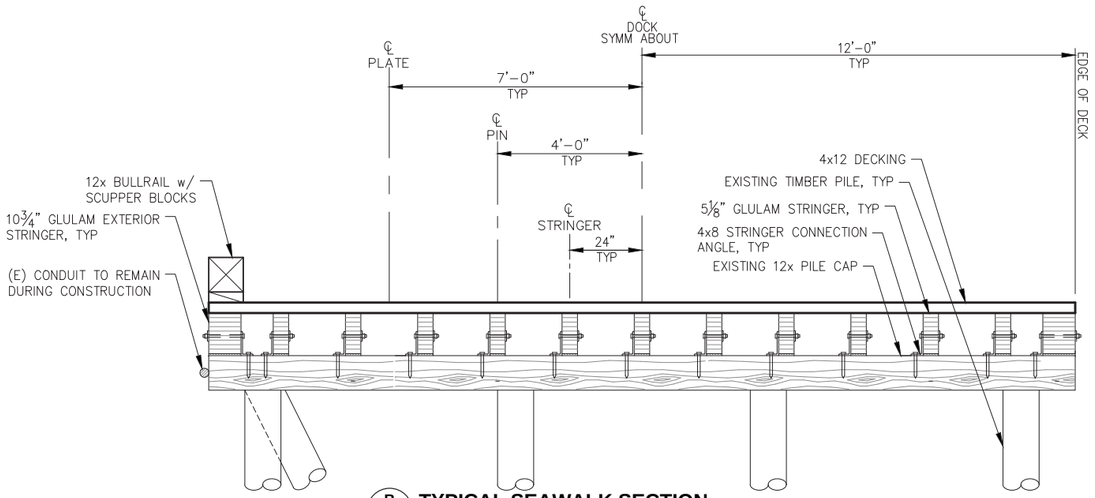

B - TYPICAL SEAWALK SECTION WITH NEW DECK

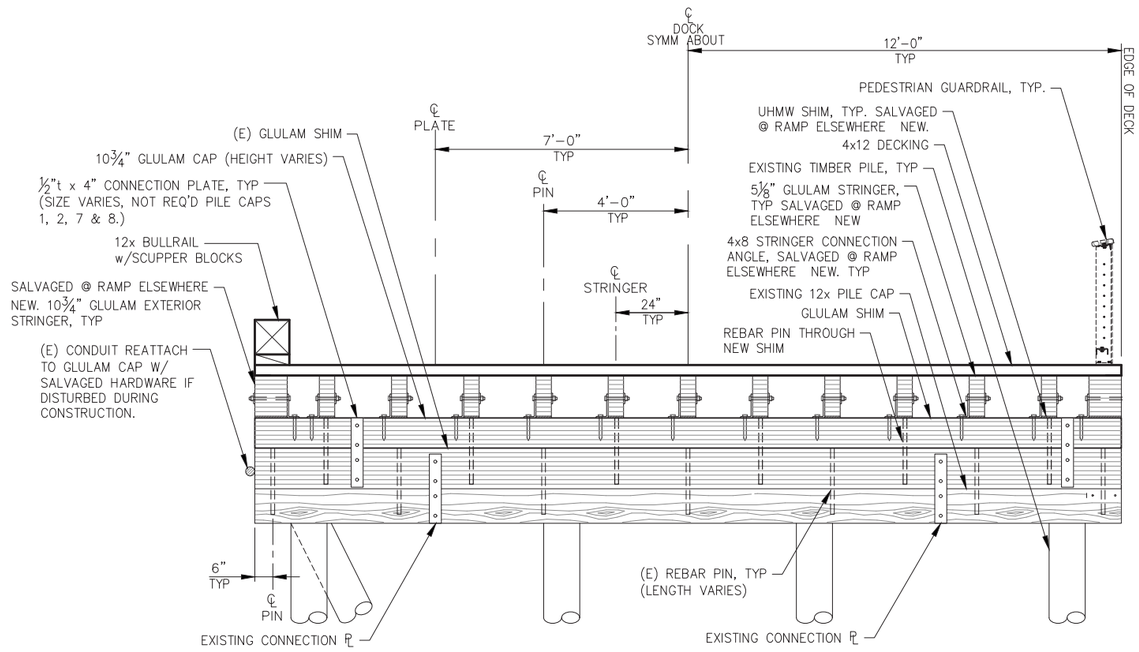

C S4.01 TYPICAL RAMP SHIM SECTION AT LOCATIONS WITH EXISTING SHIMS

CITY & BOROUGH OF JUNEAU — DOCKS & HARBORS

REVISIONS

REV.	DATE	DESCRIPTION	DWN.	CKD.	APP.

P N D ENGINEERS, INC.
9360 Glacier Highway Ste 100
Juneau, Alaska 99801
Phone: 907-586-2093
Fax: 907-586-2099
www.pndengineers.com

DESIGN: BMI CHECKED: CRS
DRAWN: BMI APPROVED: CRS
SCALE: NTS

STATE OF ALASKA — 49TH — Charles R. Somerville CE-8845 — REGISTERED PROFESSIONAL ENGINEER
DATE: 5/23/2019

DOWNTOWN WATERFRONT IMPROVEMENTS PHASE I
CBJ CONTRACT NO. DH19-014

SHEET TITLE: **SEAWALK MODIFICATIONS SECTIONS**

PND PROJECT NO.: 182045 C.A.N. NO.: AECC250

S4.02

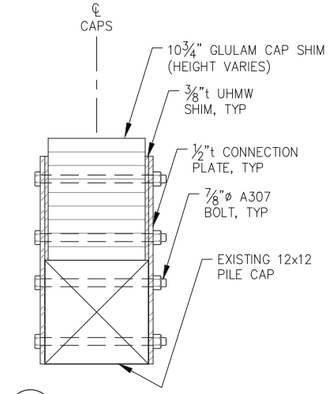

A - CONNECTION PLATE TYPICAL SECTION

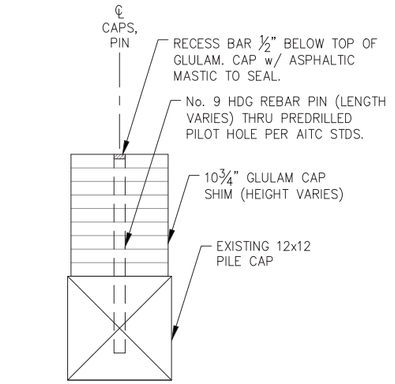

B - REBAR PIN TYPICAL SECTION AT UNSHIMED EXISTING PILE CAP

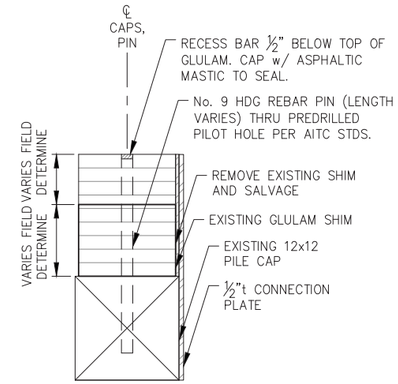

C - REBAR PIN TYPICAL SECTION AT SHIMED EXISTING PILE CAP

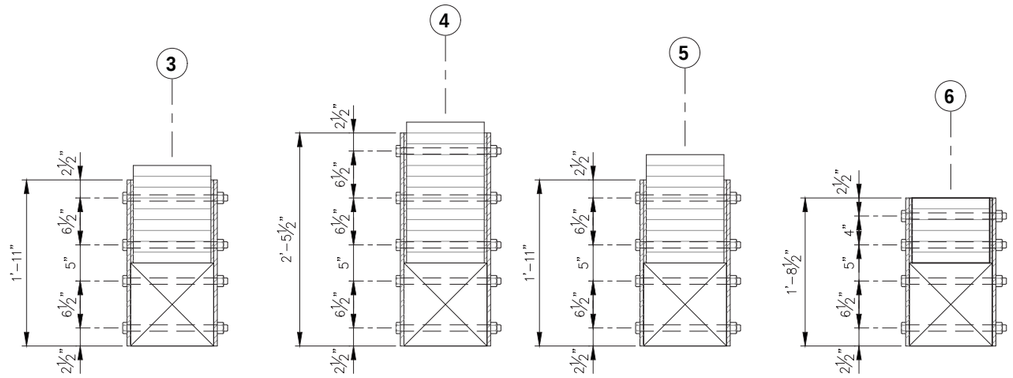

G - VARIOUS EXISTING PILE CAP CONNECTION PLATES TYPICAL SECTION

NOTE:
DETAILS NOT SHOWN SIMILAR TO TYPICAL SECTION A.

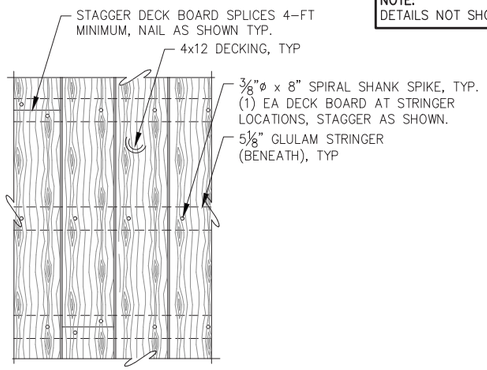

DECK NAILING - PLAN

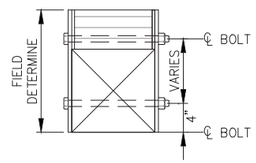

H - CAP CONNECTION PLATE SHIMS LESS THAN 9" DEEP

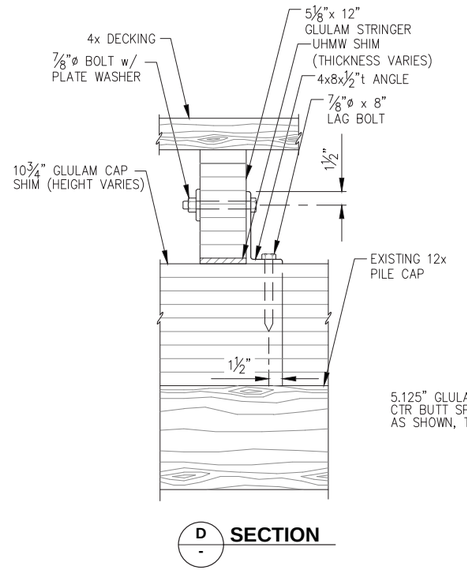

D - SECTION

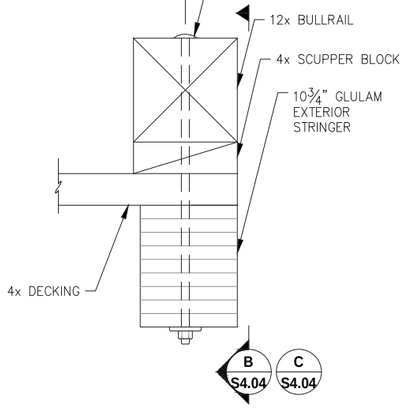

I - BULLRAIL - TYPICAL SECTION

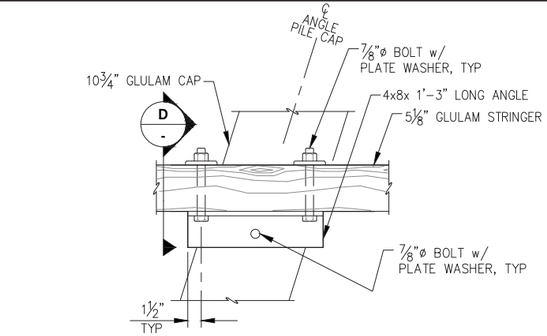

E - STRINGER CONNECTION - PLAN

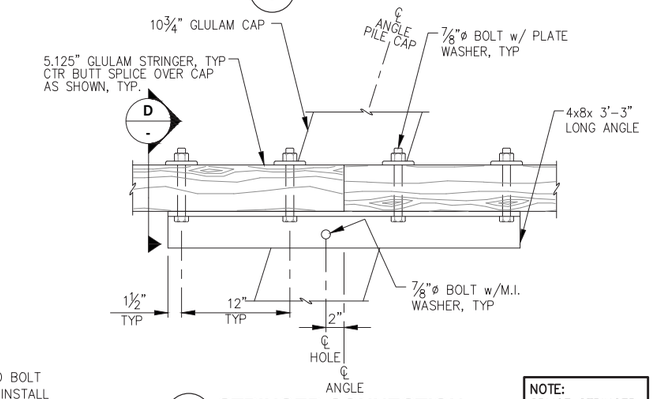

F - STRINGER CONNECTION PLAN AT SPLICE

NOTE:
SPLICE STRINGER AS REQUIRED.

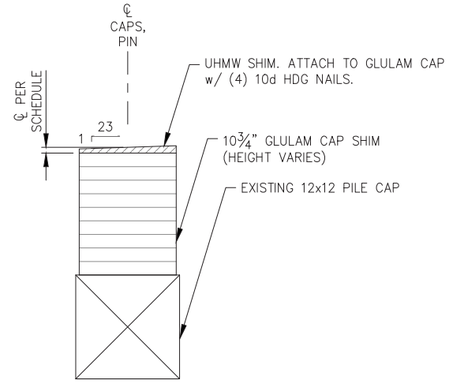

J - UHMW SHIM - TYPICAL SECTION

NOTE:
PROVIDE ADDITIONAL ASPHALT SHINGLES FOR SHIMMING AS REQ'D.

REVISIONS

REV.	DATE	DESCRIPTION	DWN.	CKD.	APP.

PND ENGINEERS, INC.
9360 Glacier Highway Ste 100
Juneau, Alaska 99801
Phone: 907-586-2093
Fax: 907-586-2099
www.pndengineers.com

DESIGN: BMI CHECKED: CRS
DRAWN: BMI APPROVED: CRS
SCALE: NTS
DATE: 5/23/2019

STATE OF ALASKA 49TH Charles R. Somerville CE-8845 REGISTERED PROFESSIONAL ENGINEER

DOWNTOWN WATERFRONT IMPROVEMENTS PHASE I
CBJ CONTRACT NO. DH19-014

SHEET TITLE: **SEAWALK MODIFICATION DETAILS**

S4.03

PND PROJECT NO.: 182045 C.A.N. NO.: AECC250

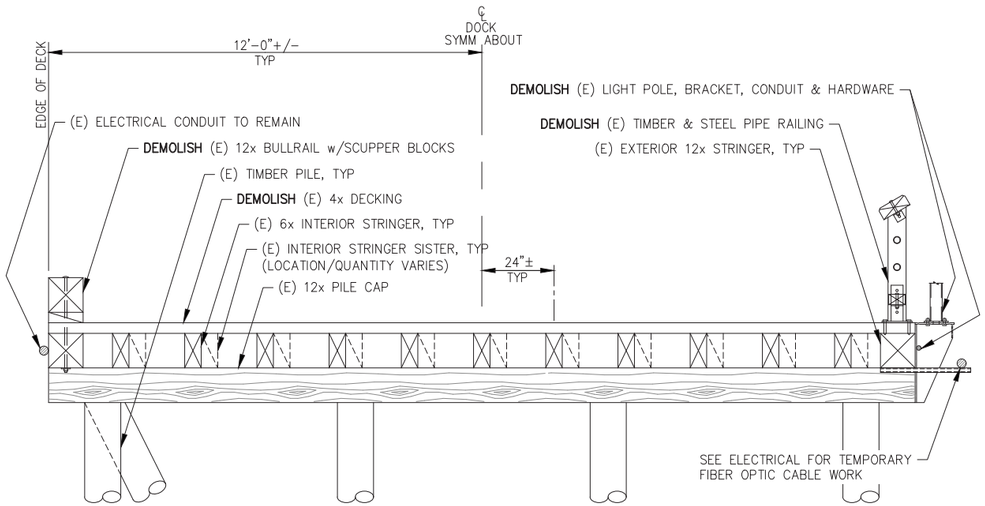

A / - **TYPICAL EXISTING DOCK SECTION**
NOTE: ALL EXISTING DOCK ITEMS TO REMAIN UNLESS OTHERWISE NOTED.

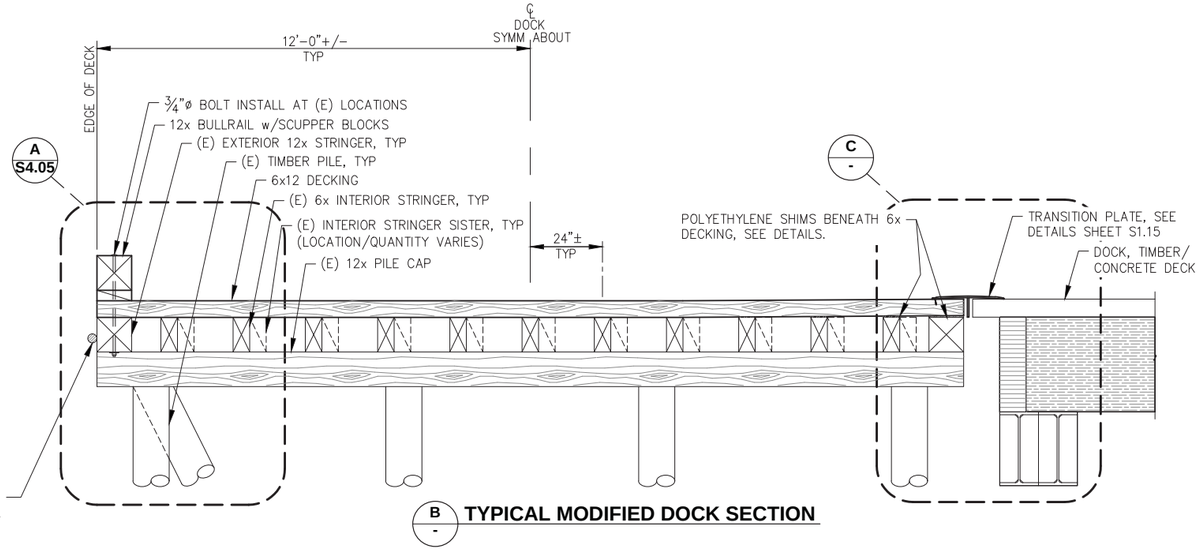

B / - **TYPICAL MODIFIED DOCK SECTION**

DOCK MODIFICATIONS SCOPE OF IMPROVEMENTS:
- REMOVE AND DISPOSE EXISTING DECKING, BULLRAIL, LIGHT POLES, BRACKETS & CONDUIT AND ASSOCIATED HARDWARE IN THEIR ENTIRETY.
- INSTALL NEW SHIMS, DECKING AND BULLRAIL AS SHOWN.
- CONTRACTOR SHALL VERIFY ALL FINAL ELEMENTS/MEASUREMENTS NOT SPECIFICALLY SHOWN AS REQUIRED TO PERFORM THE WORK.

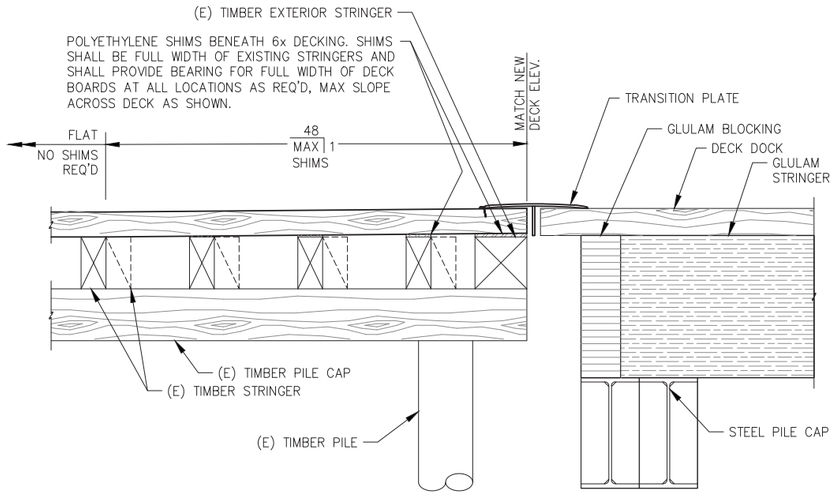

C / - **TYPICAL MODIFIED DOCK SECTION EAST SIDE SHIM DETAILS**

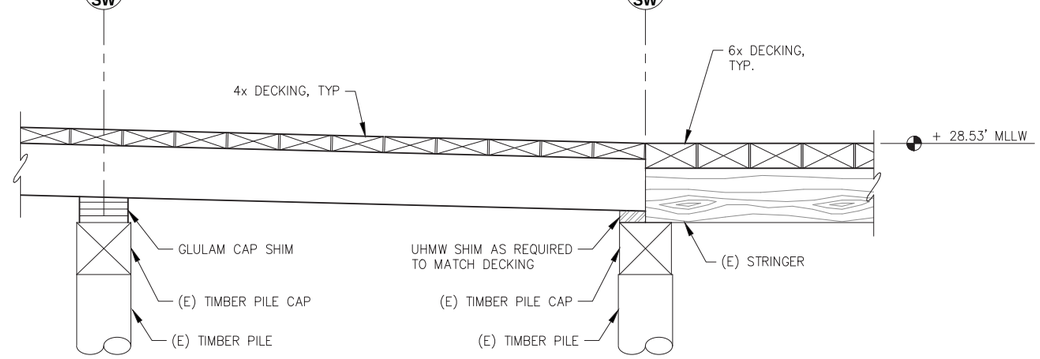

D / - **MODIFIED DOCK TRANSITION - PROFILE @ RAMP**

NOTE:
1. ELEVATION DIFFERENCE BETWEEN TOP OF EXISTING DECK AND TOP OF THE NEW DOCK (28.53') VARIES FROM 0" TO 3". CONTRACTOR SHALL CONFIRM QUANTITY, THICKNESS AND SLOPE OF SHIMS REQUIRED TO MEET THE MAX SLOPE AND TRANSITION REQUIREMENTS BETWEEN VARIOUS DECK SURFACES ON ALL SIDES.
2. IN LEIU OF SHIMS SOME PLANING OF BOTTOM SIDE OF NEW 6x DECK BOARDS MAY BE REQUIRED TO MATCH TOP TO NEW/ADJACENT DOCKS.

DEMOLISH = REMOVE & DISPOSE AT CONTRACTOR PROVIDED DISPOSAL SITE.

SALVAGE = REMOVE, SAVE & SUITABLY STORE AT OWNER DESIGNATED LOCATION OR RELOCATE AS SHOWN ON PLANS. OWNER'S DESIGNATED STORAGE LOCATION SHALL BE WITHIN 5 MILES OF PROJECT SITE. CONTRACTOR SHALL BE RESPONSIBLE FOR ALL TRANSPORTING, LOADING, UNLOADING AND GENERAL HANDLING OF SALVAGED MATERIALS. STORAGE OF SALVAGED MATERIALS SHALL BE COORDINATED WITH THE OWNER AT ALL TIMES. SPECIFIC LOCATIONS FOR MATERIALS TO BE SALVAGED AND STORED SHALL BE DICTATED BY THE OWNER AND SHALL BE AT THE OWNER'S SOLE DISCRETION. THE CONTRACTOR SHALL BE RESPONSIBLE FOR ANY DAMAGE INCURRED DUE TO HIS ACTIVITIES. DAMAGED MATERIALS SHALL BE REPAIRED OR REPLACED AT NO COST TO THE OWNER.

CITY & BOROUGH OF JUNEAU — DOCKS & HARBORS

REVISIONS

REV.	DATE	DESCRIPTION	DWN.	CKD.	APP.

PND ENGINEERS, INC.
9360 Glacier Highway Ste 100
Juneau, Alaska 99801
Phone: 907-586-2093
Fax: 907-586-2099
www.pndengineers.com

STATE OF ALASKA 49TH — Charles R. Somerville CE-8845 REGISTERED PROFESSIONAL ENGINEER

DESIGN: BMI CHECKED: CRS
DRAWN: BMI APPROVED: CRS
SCALE: NTS
DATE: 5/29/2019

DOWNTOWN WATERFRONT IMPROVEMENTS PHASE I
CBJ CONTRACT NO. DH19-014

SHEET TITLE: **SEAWALK DECK MODIFICATION DETAILS**

PND PROJECT NO.: 182045 C.A.N. NO.: AECC250

S4.04

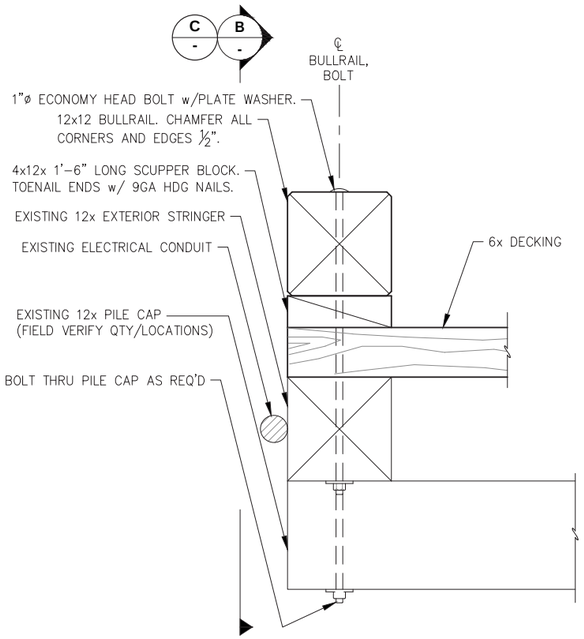

A - BULLRAIL - TYPICAL SECTION

NOTE:
- SCUPPER BLOCK AND CONNECTION BOLT SPACING 8'–0" O.C. MAX.
- PROVIDE BOLT LENGTH AS REQ'D IN LOCATIONS WHERE EXISTING PILE CAPS FALL BENEATH EXTERIOR STRINGER AND BOLT/SPLICE LOCATION.

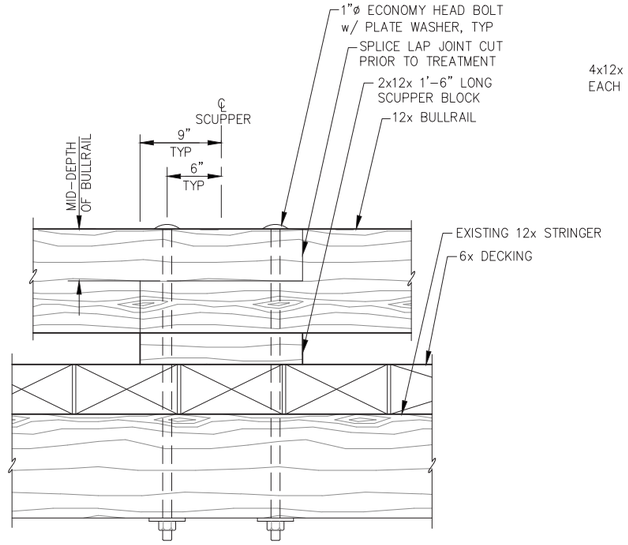

B - TYPICAL BULLRAIL SPLICE ELEVATION

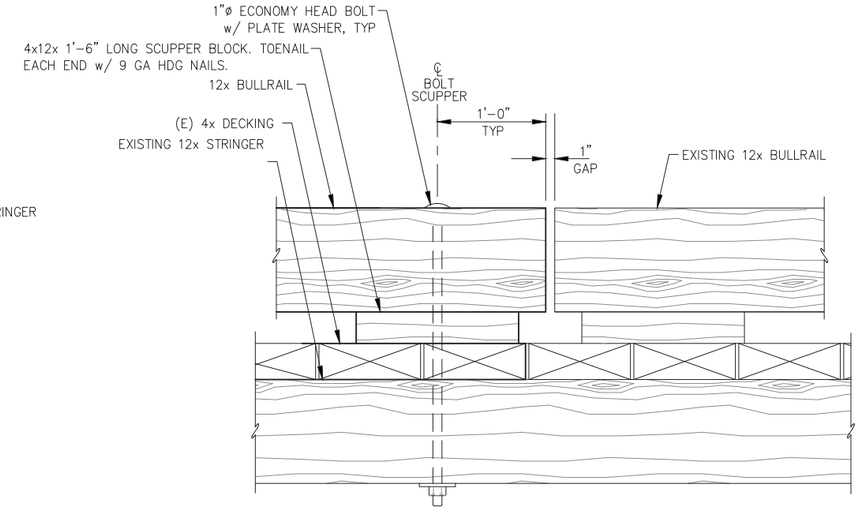

C - TYPICAL BULLRAIL END ELEVATION

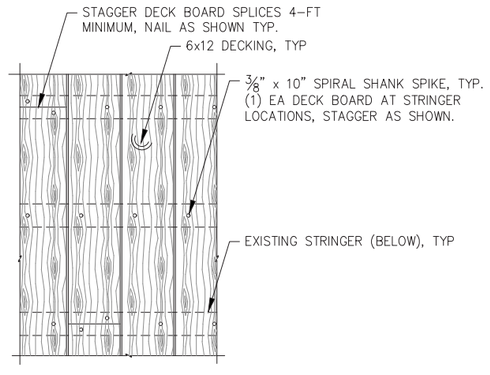

D - DECK NAILING PLAN

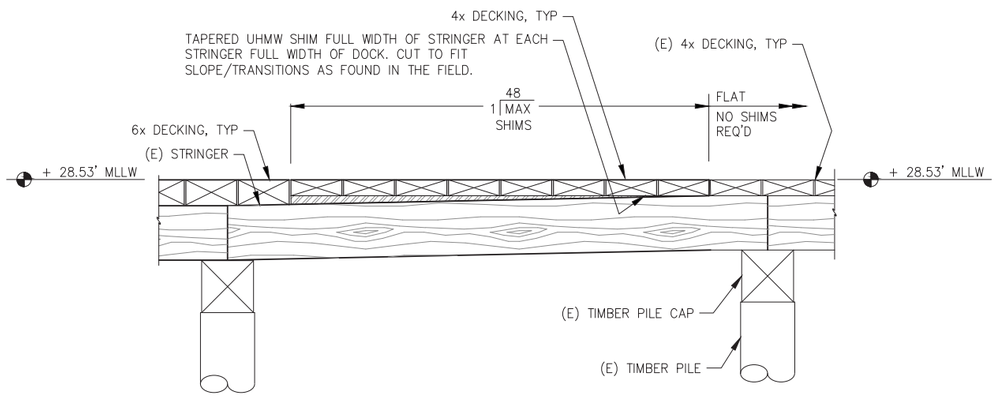

E - MODIFIED DOCK TRANSITION - PROFILE @ RAMP

NOTE: EXISTING DECK ELEVATIONS VARY, DETAIL SHOWS APPROXIMATE CONDITIONS. FIELD VERIFY EXISTING CONDITIONS.

CITY & BOROUGH OF JUNEAU — DOCKS & HARBORS

REVISIONS

REV.	DATE	DESCRIPTION	DWN.	CKD.	APP.

PND ENGINEERS, INC.
9360 Glacier Highway Ste 100
Juneau, Alaska 99801
Phone: 907-586-2093
Fax: 907-586-2099
www.pndengineers.com

DESIGN: BMI CHECKED: CRS
DRAWN: BMI APPROVED: CRS
SCALE: NTS
DATE: 5/23/2019

STATE OF ALASKA — 49TH — Charles R. Somerville — CE-8845 — REGISTERED PROFESSIONAL ENGINEER

DOWNTOWN WATERFRONT IMPROVEMENTS PHASE I
CBJ CONTRACT NO. DH19-014

SHEET TITLE: **SEAWALK DECK MODIFICATION DETAILS**

PND PROJECT NO.: 182045 C.A.N. NO.: AECC250

S4.05

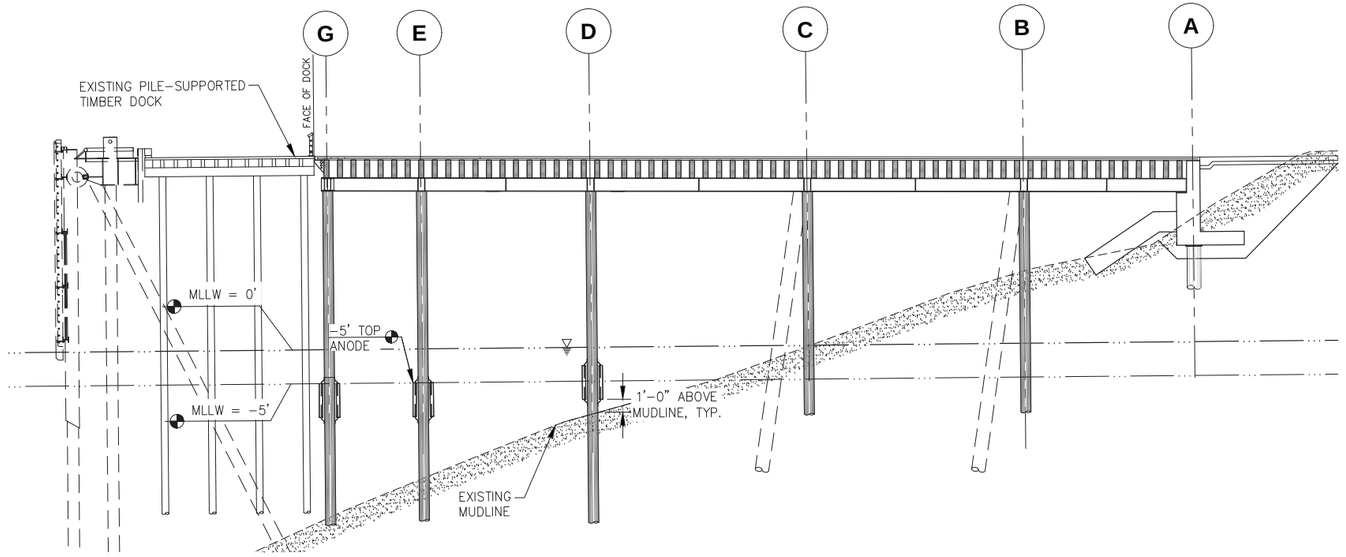

A / - PILE ANODE DOCK SECTION

NOTE: ANODE INSTALLATION ALONG GRID 5 SHOWN OTHER GRIDS SIMILAR

NOTE: ANODES SHALL BE INSTALLED ON ALL PILES WITH EXPOSED PILE BELOW A -5 MLLW ELEVATION. ANODES SHALL BE A MINIMUM OF 1'-0" FROM MUDLINE AND SHALL BE SPACED A MAXIMUM OF 20' WHEN PILE LENGTH ABOVE MUDLINE ALLOWS.

PILE ANODE SCHEDULE SUMMARY TABLE

LOCATION		DIAMETER (INCH)	WALL THICKNESS (INCH)	ANODE DIMENSION (INCH)	ANODE WEIGHT (LBS)	QUANTITY
1D	VERTICAL	18"	0.500	4x4x72	115	2
1E	VERTICAL	18"	0.500	4x4x72	115	2
1G	VERTICAL	18"	0.500	4x4x72	115	2
2D	VERTICAL	18"	0.500	4x4x72	115	2
2D.5	VERTICAL	18"	0.500	4x4x72	115	2
2G	VERTICAL	18"	0.500	4x4x72	115	2
3D	VERTICAL	18"	0.500	4x4x72	115	2
3D.5	VERTICAL	18"	0.500	4x4x72	115	2
3G	VERTICAL	18"	0.500	4x4x72	115	2
4D	VERTICAL	18"	0.500	4x4x72	115	2
4E	VERTICAL	18"	0.500	4x4x72	115	2
4G	VERTICAL	18"	0.500	4x4x72	115	2
5D	VERTICAL	18"	0.500	4x4x72	115	2
5E	VERTICAL	18"	0.500	4x4x72	115	2
5G	BATTER	18"	0.500	4x4x72	115	2
6D	VERTICAL	18"	0.500	4x4x72	115	2
6E	BATTER (S)	18"	0.500	4x4x72	115	2
6G	BATTER (N)	18"	0.500	4x4x72	115	2

PILE ANODE SCHEDULE SUMMARY TABLE

LOCATION		DIAMETER (INCH)	WALL THICKNESS (INCH)	ANODE DIMENSION (INCH)	ANODE WEIGHT (LBS)	QUANTITY
7D	VERTICAL	18"	0.500	4x4x72	115	2
7E	VERTICAL	18"	0.500	4x4x72	115	2
7G	VERTICAL	18"	0.500	4x4x72	115	2
8D	VERTICAL	16"	0.500	4x4x72	115	2
8E	VERTICAL	16"	0.500	4x4x72	115	2
8G	VERTICAL	16"	0.500	4x4x72	115	2
9FN	BATTER	16"	0.500	4x4x72	115	2
9FS	BATTER	16"	0.500	4x4x72	115	2
9G	VERTICAL	16"	0.500	4x4x72	115	2
10FN	BATTER	16"	0.500	4x4x72	115	2
10FS	BATTER	16"	0.500	4x4x72	115	2
10G	VERTICAL	16"	0.500	4x4x72	115	2
11FN	BATTER	16"	0.500	4x4x72	115	2
11FS	BATTER	16"	0.500	4x4x72	115	2
11G	VERTICAL	16"	0.500	4x4x72	115	2
12F	VERTICAL	16"	0.500	4x4x72	115	2
12G	VERTICAL	16"	0.500	4x4x72	115	2
13CC	VERTICAL	16"	0.500	4X4X72	115	2
13CC	BATTER	16"	0.500	4X4X72	115	2
14CC	VERTICAL	16"	0.500	4X4X72	115	2
13G	VERTICAL	16"	0.500	4X4X72	115	2
14G	VERTICAL	16"	0.500	4X4X72	115	2

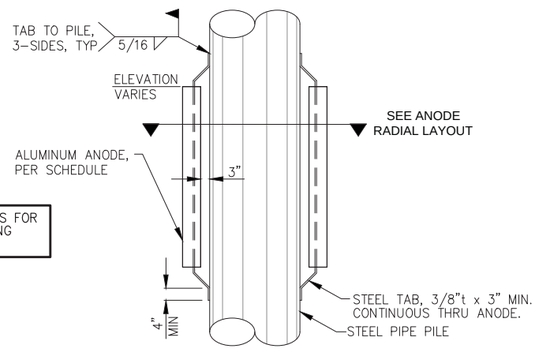

NOTE: SEE SPECIFICATIONS FOR FIELD WELD COATING REQUIREMENTS.

ANODE CONNECTION DETAIL

ANODE RADIAL LAYOUT

PIPE DIAMETER (INCH)	# ANODES / ELEV.	RADIAL LAYOUT (DEGREES)
16	2	180
18	2	180

SEE PLAN

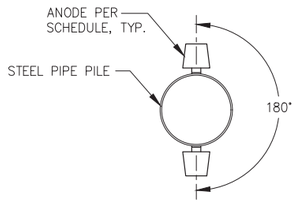

16" & 18" Ø PILE ANODE RADIAL LAYOUT PLAN

REVISIONS

REV.	DATE	DESCRIPTION	DWN.	CKD.	APP.

CITY & BOROUGH OF JUNEAU DOCKS & HARBORS

PND ENGINEERS, INC.
9360 Glacier Highway Ste 100
Juneau, Alaska 99801
Phone: 907-586-2093
Fax: 907-586-2099
www.pndengineers.com

DESIGN: MDS CHECKED: CRS
DRAWN: KLL APPROVED: CRS
SCALE: AS SHOWN

STATE OF ALASKA 49TH Charles R. Somerville CE-8845 REGISTERED PROFESSIONAL ENGINEER
DATE: 5/23/2019

DOWNTOWN WATERFRONT IMPROVEMENTS PHASE I
CBJ CONTRACT NO. DH19-014

SHEET TITLE: **PILE ANODES**

PND PROJECT NO.: 182045 C.A.N. NO.: AECC250

S5.01

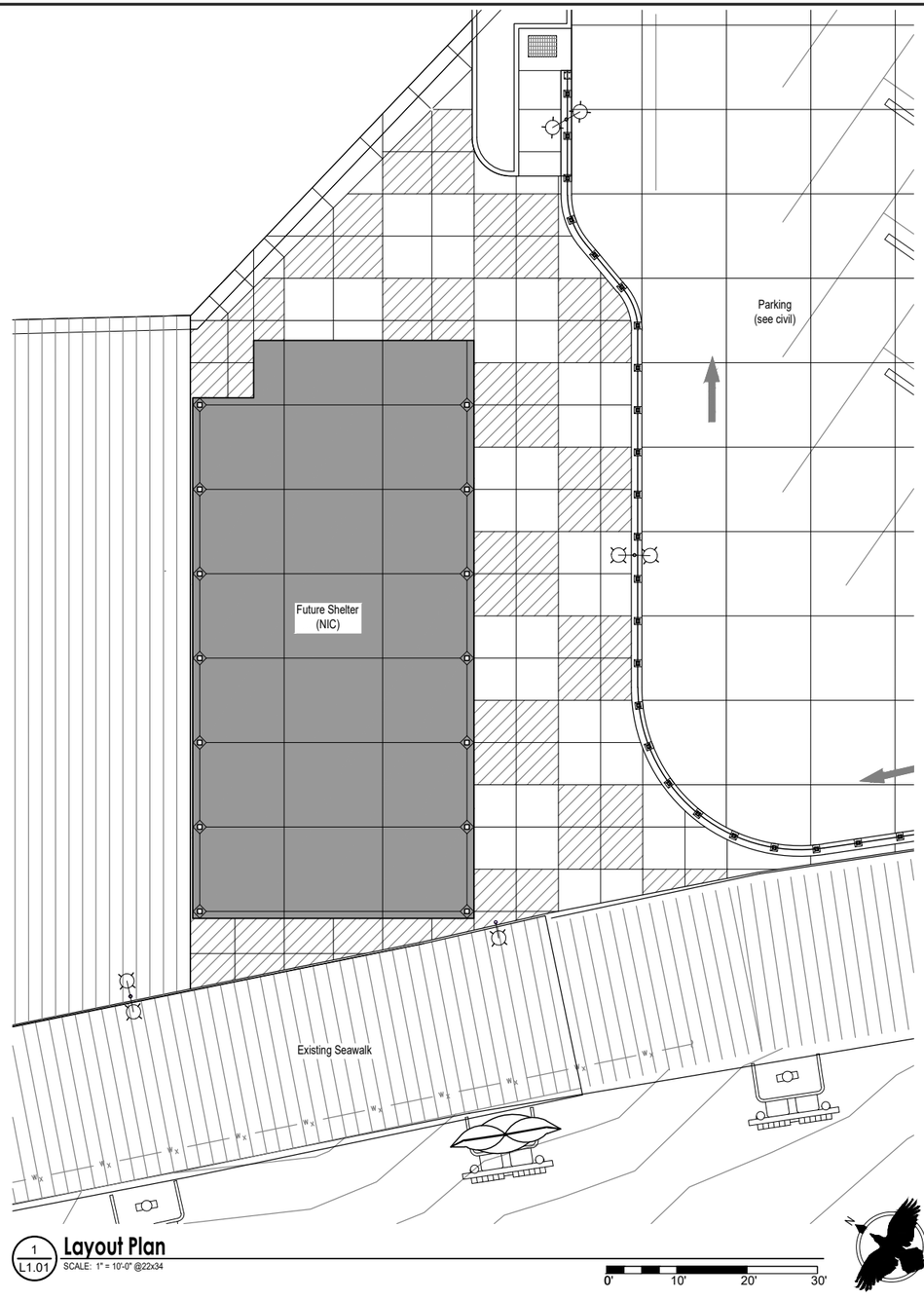

1 L1.01 **Layout Plan**
SCALE: 1" = 10'-0" @22x34

0' 10' 20' 30'

Paving Legend

- Concrete paving, see civil
- Sparkle concrete paving, see civil
- Colored concrete paving - silversmoke, see civil

Notes:
1. See civil for expansion and control joint layout of paved areas.

CITY & BOROUGH OF JUNEAU DOCKS & HARBORS

Corvus Design
Landscape Architecture
www.corvus-design.com

REVISIONS

REV.	DATE	DESCRIPTION	DWN.	CKD.	APP.

PND ENGINEERS, INC.
9360 Glacier Highway Ste 100
Juneau, Alaska 99801
Phone: 907-586-2093
Fax: 907-586-2099
www.pndengineers.com

DESIGN: LP/CM CHECKED: CM
DRAWN: LP APPROVED: CM
SCALE:
DATE: 5/23/2019

STATE OF ALASKA 49TH
Christopher R. Mertl
5/23/2019
No.10440
REGISTERED PROFESSIONAL LANDSCAPE ARCHITECT

DOWNTOWN WATERFRONT IMPROVEMENTS PHASE I
CBJ CONTRACT NO. DH19-014

SHEET TITLE: Concrete Paving Finish

PND PROJECT NO.: 182045 C.A.N. NO.: AECC250

L1.01
SHEET 1 OF 1

LEGEND

20/3	CIRCUIT BREAKER (AMPS/POLES)		LIGHT POLE
C/B	CIRCUIT BREAKER	NEC	NATIONAL ELECTRICAL CODE
CIVIL	CIVIL PROJECT DRAWINGS	N.I.C.	NOT IN CONTRACT
	CONTACTOR	NM	NON METALLIC
	DISCONNECT	(PE)	PHOTO ELECTRIC CELL
GRS	GALVANIZED RIGID STELL	REC	RECEPTACLE
GND	GROUND		RECEPTACLE, 120V, 20A INDUSTRIAL SPEC GRADE, WHITE WITH STAINLESS COVER PLATE
	GROUND BUSS	STRUCTURAL	STRUCTURAL PROJECT DRAWING SPECIFICATIONS
GFI	GROUND FAULT INTERRUPTER	UNISTRUT	SUPPORT CHANNEL UNISTRUT BRAND OR EQUAL
HT	HEAT TRACE	S	SWITCH, 120V, 20A INDUSTRIAL SPEC GRADE, WHITE WITH STAINLESS COVER PLATE
	HEAVY DUTY DISCONNECT (AMPS/POLES AS SHOWN)	(TYP)	TYPICAL
	HOME RUN	UHMW	ULTRA HIGH DENSITY MOLECULAR WEIGHT
LTG	LIGHTING	(M)	UTILITY METER
(LC)	LIGHTING CONTACTOR		

SHEET LIST TITLE

Sheet Number	Sheet Title
E1.01	OVERALL SITE PLAN – ELECTRICAL 1 OF 3
E1.02	OVERALL SITE PLAN – ELECTRICAL 2 OF 3
E1.03	OVERALL SITE PLAN – ELECTRICAL 3 OF 3
E1.04	PARTIAL CONCRETE DECK & TRENCH DETAIL – ELECTRICAL
E2.01	SINGLE LINE DIAGRAM
E2.02	EQUIPMENT & PANEL SCHEDULES
E2.03	ELECTRICAL RACK ELEVATIONS
E3.01	20' POLE DETAILS
E3.02	12' POLE DETAILS, LIGHT POLE TABLE & LUMINAIRE SCHEDULE
E3.03	LTG CONTROL SCHEMATIC & FUTURE POWER SINGLE LINE
E3.04	PARKING CANOPY PLAN – ELECTRICAL
E3.05	PARKING CANOPY SECTIONS AND DETAILS – ELECTRICAL
E4.01	FIBER CABLE RISER DIAGRAM
E4.02	EXISTING & NEW ACS RISER DIAGRAM
E4.03	CAMERA SCHEMATIC

NOTES:

1. REMOVE EXISTING LIGHT POLE AND REPLACE WITH TYPE A LUMINAIRE AND LIGHT POLE, SEE DETAILS 1 & 5, SHEET E3.01. BOLT LIGHT POLE BRACKET EXTENSION TO EXISTING ANCHOR BOLTS. BOLT NEW LIGHT POLE TO BRACKET EXTENSION. SEE STRUCTURAL FOR LIGHT POLE BRACKET EXTENSION. SPLICE EXISTING CONDUCTORS TO NEW CONDUCTORS (BRACKET EXTENSION HAS HANDHOLE TO ALLOW THIS WORK). POWER NEW LUMINAIRE FROM NEW CONDUCTORS (3 NO. 12). REUSE EXISTING CONDUCTORS FROM PANEL IN PARKING GARAGE TO POLE BASE (CKT 4 OR 12). SEE LIGHT POLE TABLE, SHEET E3.02. SEE LUMINAIRE SCHEDULE. PROVIDE POLES WITH BANNER ARMS.
2. REMOVE EXISTING WALL MOUNT LUMINAIRE. REPLACE WITH NEW TYPE D WALL MOUNT LUMINAIRE. USE CONCRETE ANCHORS (HILTE) TO SECURE TO PARKING GARAGE. FEED WITH SAME CIRCUIT AS EXISTING.

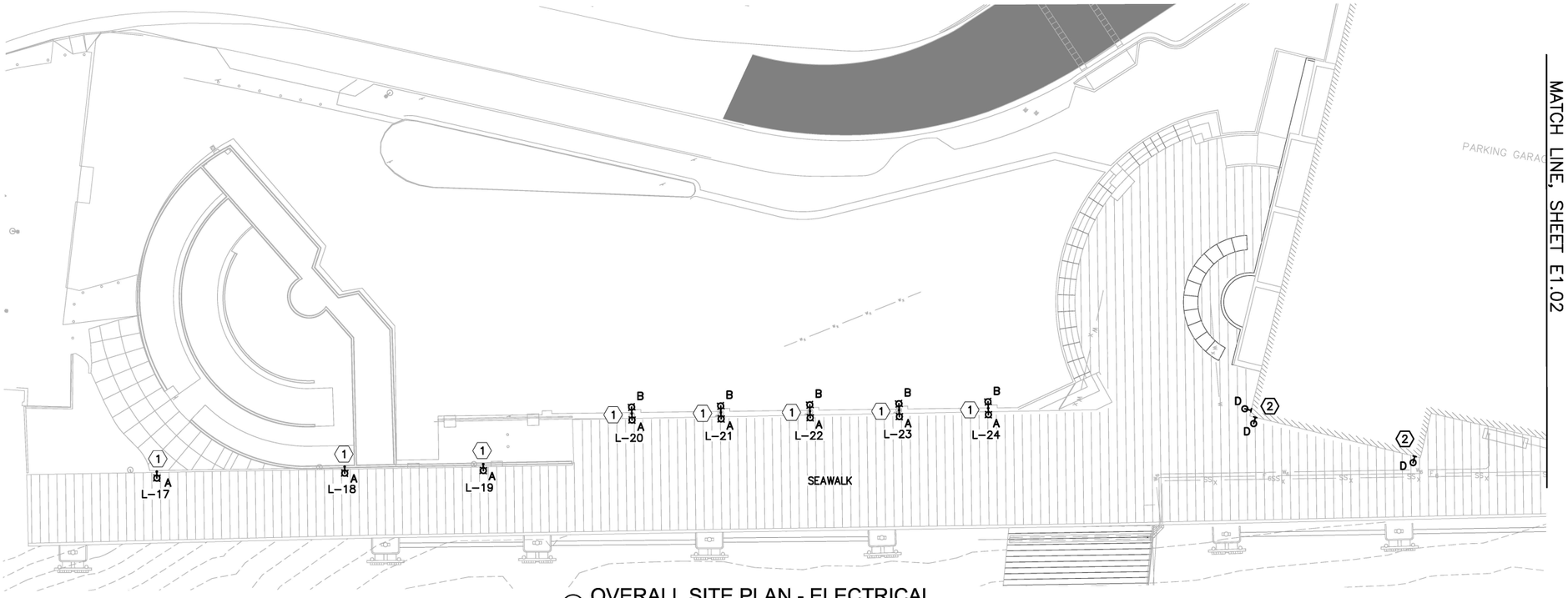

1 OVERALL SITE PLAN - ELECTRICAL

REVISIONS

REV.	DATE	DESCRIPTION	DWN.	CKD.	APP.

CITY & BOROUGH OF JUNEAU DOCKS & HARBORS

MORRIS ENGINEERING GROUP INC
2375 Jordan Avenue #7, Juneau, AK 99801
Phone: 907-789-3350, License: AECL1010

PND ENGINEERS, INC.
9360 Glacier Highway Ste 100
Juneau, Alaska 99801
Phone: 907-586-2093
Fax: 907-586-2099
www.pndengineers.com

DESIGN: MGM CHECKED: MGM
DRAWN: JRW APPROVED: MGM
SCALE: SCALE IN FEET 0 20 40 FT.

STATE OF ALASKA 49TH
Mark G. Morris
May 23, 2019
No. EE 8613
REGISTERED PROFESSIONAL ENGINEER
DATE: 5/23/2019

DOWNTOWN WATERFRONT IMPROVEMENTS PHASE I
CBJ CONTRACT NO. DH19-014

SHEET TITLE:
OVERALL SITE PLAN - ELECTRICAL 1 OF 3

PND PROJECT NO.: 182045 C.A.N. NO.: ~~AECG250~~.DWG

E1.01

SHEET NOTES:

1. ALL ENCLOSURES AND JUNCTION BOXES SHALL BE 316 STAINLESS STEEL, NEMA 4X.
2. LIGHT POLES ARE NUMBERED L–1 TO L–29. SEE LIGHT POLE TABLE, SHEET E3.02 FOR FOUNDATION TO BE USED. TYPE OF LUMINAIRE NEXT TO LIGHT POLE (A, B, C, OR D), SEE LUMINAIRE SCHEDULE.
3. INSTALL ALL EQUIPMENT PER CIVIL.
4. SEE EQUIPMENT SCHEDULE, SHEET E2.02 FOR (#) EQUIPMENT NUMBERS.
5. SUPPORT CONDUIT AND ENCLOSURE UNDER DOCK ON SUPPORT CHANNEL. SIZE AND QUANTITY AS REQUIRED. ROUTE CONDUIT BETWEEN BEAMS, UNDER BEAMS, ETC. AS REQUIRED. MANY BENDS MAY BE REQUIRED. MOUNT ENCLOSURES UNDER BEAMS OR ON SIDE OF BEAMS AS NEEDED. ROUTE CONDUIT AROUND STRUCTURE, WATER, & SEWER LINES, ETC.

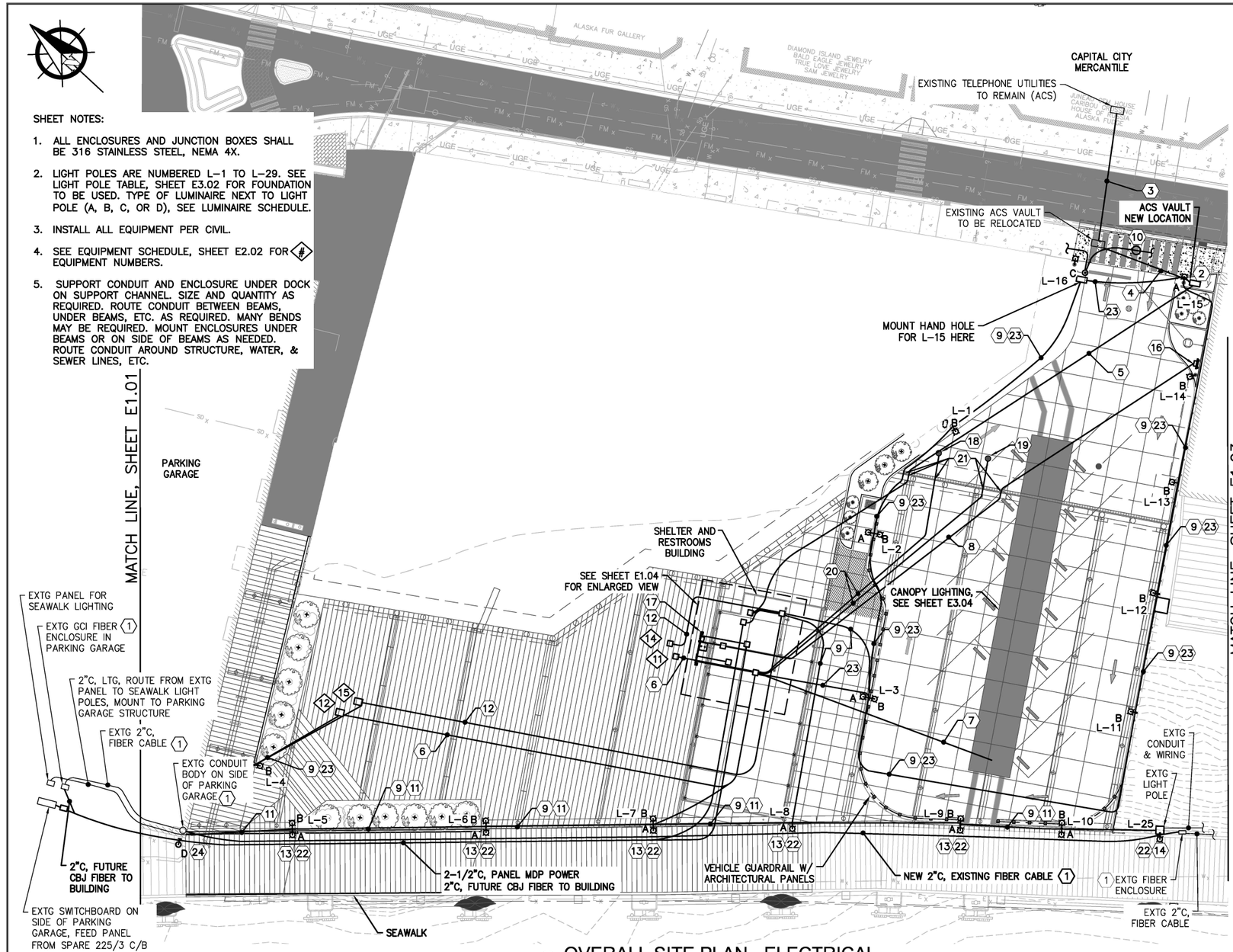

1 OVERALL SITE PLAN - ELECTRICAL

KEY NOTES:

1. REMOVE FIBER CABLE FROM TERMINATION POINT IN PARKING GARAGE AND PULL OUT OF CONDUIT BACK TO EXISTING ENCLOSURE JUST SOUTH OF PROJECT BOUNDARY. REMOVE CONDUIT ON SEAWALK BETWEEN PARKING GARAGE AND ENCLOSURE. REPLACE WITH NEW CONDUIT ROUTED UNDER SEAWALK. RE–PULL FIBER CABLE AND RE–TERMINATE.
2. RELOCATE ACS VAULT AND EXTEND EXISTING 4"C & 2"C FROM EXISTING VAULT LOCATION TO NEW LOCATION. PROVIDE 2"C FROM RELOCATED VAULT TO ENCLOSURE UNDER DECK AT FUTURE BUILDING LOCATION.
3. EXISTING 4"C & 2"C EXTEND TO RELOCATED ACS VAULT. USE RMC.
4. 4"C & 2"C, CONNECT TO EXISTING CONDUIT AND ROUTE TO RELOCATED VAULT.
5. 2"C, ROUTE TO ACS ENCLOSURE FOR FUTURE BUILDING.
6. 2"C, 2 NO. 8 & 1 NO. 10 GND (LTG), 4 NO. 8 & 1 NO. 10 GND (REC). MOUNT TO UNDERSIDE OF DECK ON SUPPORT CHANNEL.
7. 2"C, 2 NO. 8 & 1 NO. 10 GND. STUB UP INTO CANOPY COLUMN. SEE DETAILS SHEET E3.05.
8. (1) 2"C, LIFT STATION POWER.
   (1) 2"C, SPARE.
9. 2"C, FUTURE CAMERA ROUTE TO 12" X 12" X 6" JUNCTION BOX AT EACH LIGHT POLE. SEE DETAIL 3, SHEET E3.01. WHERE POLE IS MOUNTED ON CONCRETE BASE, ROUTE TO J–BOX NEXT TO POLE, SEE DETAIL 4, SHEET E3.01.
10. EXISTING CBJ STREET LIGHT TO BE REMOVED AND REPLACED BY LIGHT POLE WITH TYPE C LUMINAIRE. ROUTE EXISTING CONDUIT TO NEW POLE. PULL NEW CONDUCTORS BETWEEN EXISTING POLES ON EACH SIDE.
11. 2"C, 6 NO. 8 & 1 NO. 8 GND, ROUTE TO 12" X 12" X 6" JUNCTION BOX AT EACH LIGHT POLE, SEE DETAIL 3 SHEET E3.01.
12. 2"C, FUTURE CAMERA TO 24" X 24" X 12" ENCLOSURE.
13. REMOVE EXISTING LIGHT POLE, MOUNTING BRACKET, AND CONDUIT BACK TO PARKING GARAGE. PROVIDE NEW LIGHT POLE AND LUMINAIRES AS SHOWN. PROVIDE NEW CONDUIT AND WIRING. RE–POWER ON SAME CIRCUITS (CKTS 6, 8, & 10).
14. REMOVE EXISTING LIGHT POLE REPLACE WITH TYPE A LUMINAIRE AND LIGHT POLE SEE DETAIL 1 & 5, SHEET E3.01. BOLT LIGHT POLE BRACKET EXTENSION TO EXISTING ANCHOR BOLTS. BOLT NEW LIGHT POLE TO LIGHT POLE BRACKET EXTENSION. SPLICE EXISTING CONDUCTORS TO NEW CONDUCTORS (BRACKET EXTENSION HAS HANDHOLE TO ALLOW THIS WORK). POWER NEW LUMINAIRE FROM NEW CONDUCTORS (3 NO. 12). REUSE EXISTING CONDUCTORS FROM PANEL IN PARKING GARAGE TO POLE BASE (CKTS 6, 8, & 10).
15. (2) 2"C, SPARE
16. DISCONNECT AND LIFT STATION CONTROL PANEL MOUNT TO RACK ADJACENT LIFT STATION, SEE DETAIL 2, SHEET E2.03.
17. PANEL MDP, TRANSFORMER, PANEL B, & LIGHTING CONTACTOR ON RACK, SEE SHEET E2.03.
18. WATER MANHOLE. SEE CIVIL.
19. SEWER MANHOLE. SEE CIVIL.
20. 2"C, SPARE.
21. ROUTE CONDUIT AT 90° ANGLE TO WALL. SLEEVE ALL CONDUIT PENETRATIONS IN WALL. COORDINATE WITH FABRICATOR OF CONCRETE ABUTMENT. SEE CIVIL.
22. PROVIDE POLE WITH BANNER ARMS. SEE DETAIL 1, SHEET E3.01.
23. 2"C, 4 NO. 8 & 1 NO. 10 GND LIGHTING (2 NO. 8), SPARE (2 NO. 8).
24. REMOVE EXISTING WALL MOUNT LUMINAIRE. REPLACE WITH NEW TYPE D WALL MOUNT LUMINAIRE. USE CONCRETE ANCHORS (HILTE) TO SECURE TO PARKING GARAGE. FEED WITH SAME CIRCUIT AS EXISTING.

CITY & BOROUGH OF JUNEAU DOCKS & HARBORS

MORRIS ENGINEERING GROUP INC
2375 Jordan Avenue #7, Juneau, AK 99801
Phone: 907-789-3350, License: AECL1010

REVISIONS

REV.	DATE	DESCRIPTION	DWN.	CKD.	APP.

PND ENGINEERS, INC.
9360 Glacier Highway Ste 100
Juneau, Alaska 99801
Phone: 907-586-2093
Fax: 907-586-2099
www.pndengineers.com

DESIGN: MGM CHECKED: MGM
DRAWN: JRW APPROVED: MGM
SCALE: SCALE IN FEET 0 20 40 FT.

STATE OF ALASKA 49TH
Mark G. Morris
May 23, 2019
No. EE 8813
REGISTERED PROFESSIONAL ENGINEER
DATE: 5/23/2019

DOWNTOWN WATERFRONT IMPROVEMENTS PHASE I
CBJ CONTRACT NO. DH19-014

SHEET TITLE:
OVERALL SITE PLAN - ELECTRICAL 2 OF 3

PND PROJECT NO.: 182045 C.A.N. NO.: ~~AECG250~~.DWG

E1.02

NOTES:

1. REMOVE EXISTING LIGHT POLE AND REPLACE WITH TYPE A LUMINAIRE AND LIGHT POLE, SEE DETAILS 1 & 5, SHEET E3.01. BOLT LIGHT POLE BRACKET EXTENSION TO EXISTING ANCHOR BOLTS. BOLT NEW LIGHT POLE TO BRACKET EXTENSION. SEE STRUCTURAL FOR LIGHT POLE BRACKET EXTENSION. SPLICE EXISTING CONDUCTORS TO NEW CONDUCTORS (BRACKET EXTENSION HAS HANDHOLE TO ALLOW THIS WORK). POWER NEW LUMINAIRE FROM NEW CONDUCTORS (3 NO. 12). REUSE EXISTING CONDUCTORS FROM PANEL IN PARKING GARAGE TO POLE BASE (CKT 6, 8 OR 10). SEE LIGHT POLE TABLE, SHEET E3.02. SEE LIMINAIRE SCHEDULE. PROVIDE POLES WITH BANNER ARMS.

GENERAL NOTES (APPLICABLE ALL SHEETS):

1. ALL WORK ON ALL SHEETS IS NEW UNLESS OTHERWISE NOTED.
2. PERFORM ALL WORK PER THE 2017 NATIONAL ELECTRIC CODE (NEC) AND OTHER APPLICABLE NATIONAL, STATE, AND LOCAL CODES AND STANDARDS. PROVIDE EQUIPMENT AND AN INSTALLATION THAT COMPLIES WITH ARTICLE 555 OF THE NEC.
3. MOUNT ALL OF THE ELECTRICAL EQUIPMENT IN THE LOCATIONS SHOWN ON THE CIVIL DRAWINGS. LOCATIONS SHOWN ON THE ELECTRICAL DRAWINGS ARE APPROXIMATE.
4. SEE CIVIL AND STRUCTURAL DRAWINGS FOR MOUNTING ALL ELECTRICAL EQUIPMENT AS WELL AS ELECTRICAL DRAWINGS. MOUNTING POSTS, LIGHT POLE BASE DETAILS, CABLE TRAY, PEDESTAL FRAMES, ETC. ARE DETAILED ON THE CIVIL DRAWINGS. MOUNT ELECTRICAL EQUIPMENT AS SHOWN ON BOTH ELECTRICAL AND CIVIL DRAWINGS. SIZE MOUNTING BOLTS, BRACKETS, HARDWARE, ETC. FOR A SAFETY FACTOR OF 5 MINIMUM. ALL EQUIPMENT AND MATERIALS SHALL NOT MOVE WHEN PULLED OR PUSHED BY HAND (EXCEPT CABLES AND FLEXIBLE CONDUIT). SECURE ALL CONDUIT WITHIN 12 INCHES OF END OF CONDUIT AND AS REQUIRED PER NEC.
5. FIELD TREAT ALL HOT DIPPED GALVANIZED MATERIALS THAT ARE CUT, DRILLED, SCRATCHED OR DAMAGED. SEE CIVIL FOR FIELD TREATMENT.
6. ALL CONDUCTORS SHALL BE COPPER, ALL INSULATION SHALL BE 600V RATED. TYPE XHHW FOR CONDUCTORS NOT IN A CABLE. ALL CABLES SHALL BE THE TYPE SPECIFIED, NO SUBSTITUTIONS.
7. IF GALVANIZED THREADS ARE CHASED IN ORDER TO BE USABLE, TREAT CHASED THREADS WITH BRAKE CLEANER, THEN COAT WITH MARINE TRAILER WHEEL BEARING GREASE BEFORE APPLYING A STAINLESS STEEL WASHER AND NUT. APPLY GREASE AFTER DRILLING AND TAPPING.
8. USE 316 STAINLESS STEEL BOLTS, WASHERS, ETC. TO MOUNT ELECTRICAL EQUIPMENT AND STRUT CHANNEL. ALL FASTENERS AND OTHER EXPOSED HARDWARE SHALL BE 316 STAINLESS STEEL. ALL STAINLESS STEEL SHALL BE 316 STAINLESS STEEL.
9. SEAL ALL PENETRATIONS IN ELECTRICAL EQUIPMENT WITH UL LISTED HARDWARE FOR SUCH USE. USE RUBBER OR SILICONE WASHERS IN ADDITION TO STAINLESS STEEL WASHERS.
10. USE 316 STAINLESS STEEL SUPPORT CHANNEL (UNISTRUT) TO SUPPORT CONDUIT, PANELS, CONTACTORS, ENCLOSURES, AND ALL OTHER ELECTRICAL EQUIPMENT. TRIM SUPPORT CHANNEL 1/4" SHORT OF EDGE OF EQUIPMENT AND POSTS. SAND END OF SUPPORT CHANNEL SMOOTH. USE CABLE SUPPORTS THAT COMPLY WITH 555.13(4). USE CUSHION STRAPS WHEN SUPPORTING CABLE TO SUPPORT CHANNEL. PROVIDE SUPPORT CHANNEL UNDER DOCK, SPACING AND QUANTITY AS REQUIRED.
11. PROVIDE OXIDE INHIBITING COMPOUND ON ALL ELECTRICAL CONNECTIONS. BURNDY PENETROX TYPE A OR E AS REQUIRED.
12. ALL LUGS AND ELECTRICAL TERMINALS SHALL BE COPPER OR TIN PLATED HIGH CONDUCTIVE ALUMINUM.
13. THE PART NUMBERS SHOWN ON THE DRAWINGS ARE NOT TO BE USED AS A BILL OF MATERIALS. VERIFY ALL PART NUMBERS ARE CORRECT PRIOR TO ORDERING, VERIFY ALL REQUIRED OR NECESSARY ACCESSORIES, FEATURES, MATERIAL TYPE, ETC. ARE INCLUDED.
14. BUILD THE PROJECT AS DESIGNED. DO NOT ASSUME THE DESIGN WILL BE CHANGED AT THE CONTRACTOR'S REQUEST.
15. PROVIDE CONDUIT BODIES IN ALL CONDUIT RUNS AS REQUIRED FOR NUMBER OF BENDS AND AS NEEDED.
16. USE RIGID STEEL CONDUIT WHERE IMPRACTICAL TO USE SCHEDULE 80 PVC DUE TO SPACING BETWEEN SUPPORTS OR OTHER FACTORS.



1 OVERALL SITE PLAN - ELECTRICAL

CITY & BOROUGH OF JUNEAU DOCKS & HARBORS

MORRIS ENGINEERING GROUP INC
2375 Jordan Avenue #7, Juneau, AK 99801
Phone: 907-789-3350, License: AECL1010

REVISIONS

REV.	DATE	DESCRIPTION	DWN.	CKD.	APP.

PND ENGINEERS, INC.
9360 Glacier Highway Ste 100
Juneau, Alaska 99801
Phone: 907-586-2093
Fax: 907-586-2099
www.pndengineers.com

DESIGN: MGM CHECKED: MGM
DRAWN: JRW APPROVED: MGM
SCALE: SCALE IN FEET 0 20 40 FT.

STATE OF ALASKA 49TH
Mark G. Morris
May 23, 2019
No. EE 8613
REGISTERED PROFESSIONAL ENGINEER
DATE: 5/23/2019

DOWNTOWN WATERFRONT IMPROVEMENTS
PHASE I
CBJ CONTRACT NO. DH19-014

SHEET TITLE:
OVERALL SITE PLAN - ELECTRICAL 3 OF 3

PND PROJECT NO.: 182045 C.A.N. NO.: ~~AEGC250~~.DWG

E1.03

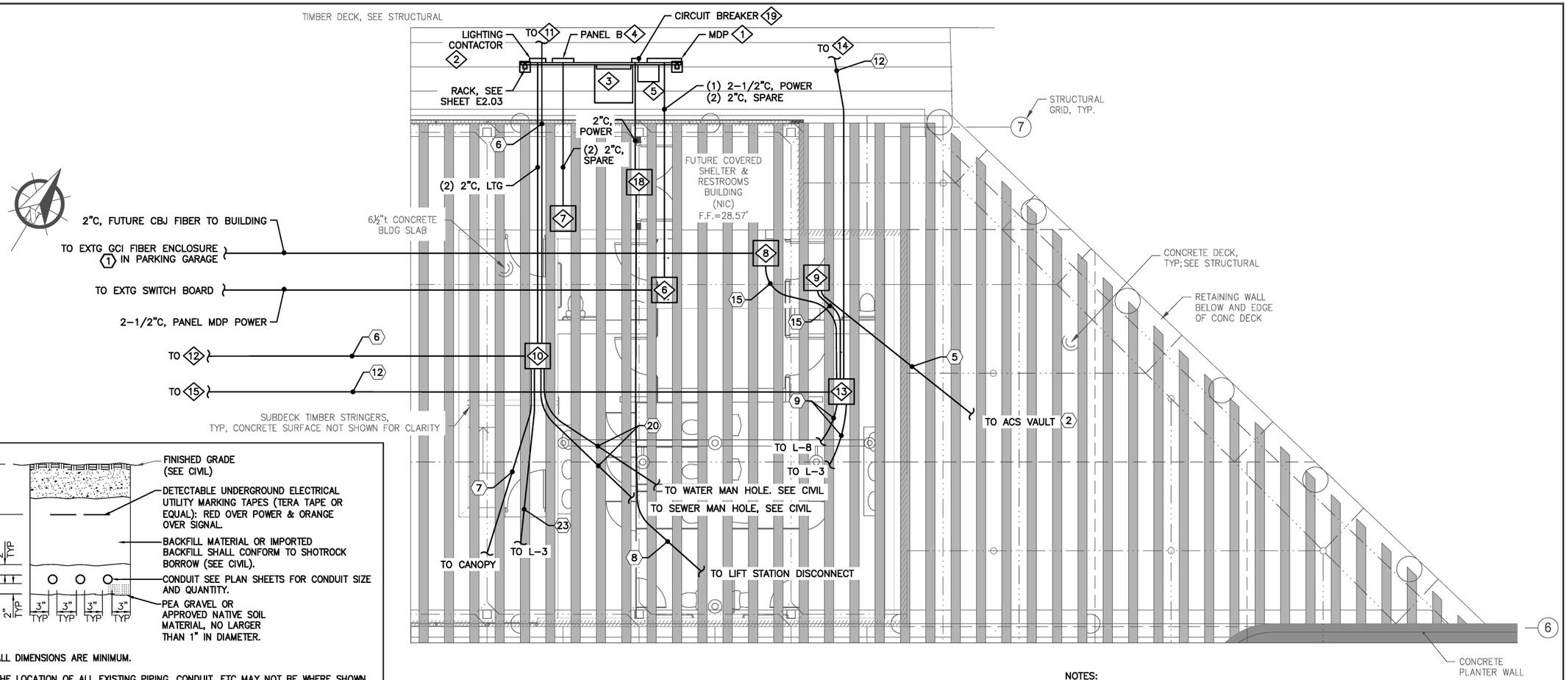

NOTES:

1. SEE SHEET E1.02 FOR (#) KEY NOTES.
2. SEE EQUIPMENT SCHEDULE, SHEET E2.02 FOR ◇# EQUIPMENT NUMBERS.

1 PARTIAL CONCRETE DECK - ELECTRICAL

NOTES:

1. ALL DIMENSIONS ARE MINIMUM.
2. THE LOCATION OF ALL EXISTING PIPING, CONDUIT, ETC MAY NOT BE WHERE SHOWN AND MAY NOT BE SHOWN. ALL LOCATIONS THAT ARE SHOWN ARE APPROXIMATE AND SHOULD BE FIELD VERIFIED. OBTAIN UTILITY LOCATES PRIOR TO DIGGING. DIG WITH CAUTION. AVOID WATER, SEWER, DRAINAGE PIPES AND OTHER CONFLICTS.
3. MAINTAIN 12 INCHES MINIMUM SEPARATION (ALL DIRECTIONS) BETWEEN POWER AND OTHER EXISTING CONDUITS, PIPES, CONCRETE STRUCTURE, VAULTS, ETC.
4. CUT & REPLACE EXISTING ASPHALT, CONCRETE, CONCRETE CURB, GUTTER, SIDEWALK, ETC. AS NECESSARY.
5. ALL TRENCHES SHALL BE 18" WIDE MIN. COMPACT BACKFILL PER CIVIL. TOP 6" OF MATERIAL PER CIVIL.
6. POWER UTILITY CONDUIT SHALL BE BURIED AT A MINIMUM OF 3'.
7. MODIFY CONDUIT BURIAL DEPTH WHERE SHOWN ON DRAWINGS.
8. MAINTAIN 36" MINIMUM LATERAL SEPARATION FROM WATER AND SEWER LINES. MAINTAIN 12" SEPARATION BETWEEN ELECTRICAL UTILITY CONDUITS.

2 TRENCH DETAIL
NO SCALE

REVISIONS

REV.	DATE	DESCRIPTION	DWN.	CKD.	APP.

CITY & BOROUGH OF JUNEAU DOCKS & HARBORS
MORRIS ENGINEERING GROUP INC
2375 Jordan Avenue #7, Juneau, AK 99801
Phone: 907-789-3350, License: AECL1010

PND ENGINEERS, INC.
9360 Glacier Highway Ste 100
Juneau, Alaska 99801
Phone: 907-586-2093
Fax: 907-586-2099
www.pndengineers.com

DESIGN: MGM CHECKED: MGM
DRAWN: JRW APPROVED: MGM
SCALE:

STATE OF ALASKA 49TH
Mark G. Morris
May 23, 2019
No. EE 8613
REGISTERED PROFESSIONAL ENGINEER
DATE: 5/23/2019

DOWNTOWN WATERFRONT IMPROVEMENTS PHASE I
CBJ CONTRACT NO. DH19-014

SHEET TITLE:
PARTIAL CONCRETE DECK & TRENCH DETAIL - ELECTRICAL

PND PROJECT NO.: 182045 C.A.N. NO.: AECC250

E1.04

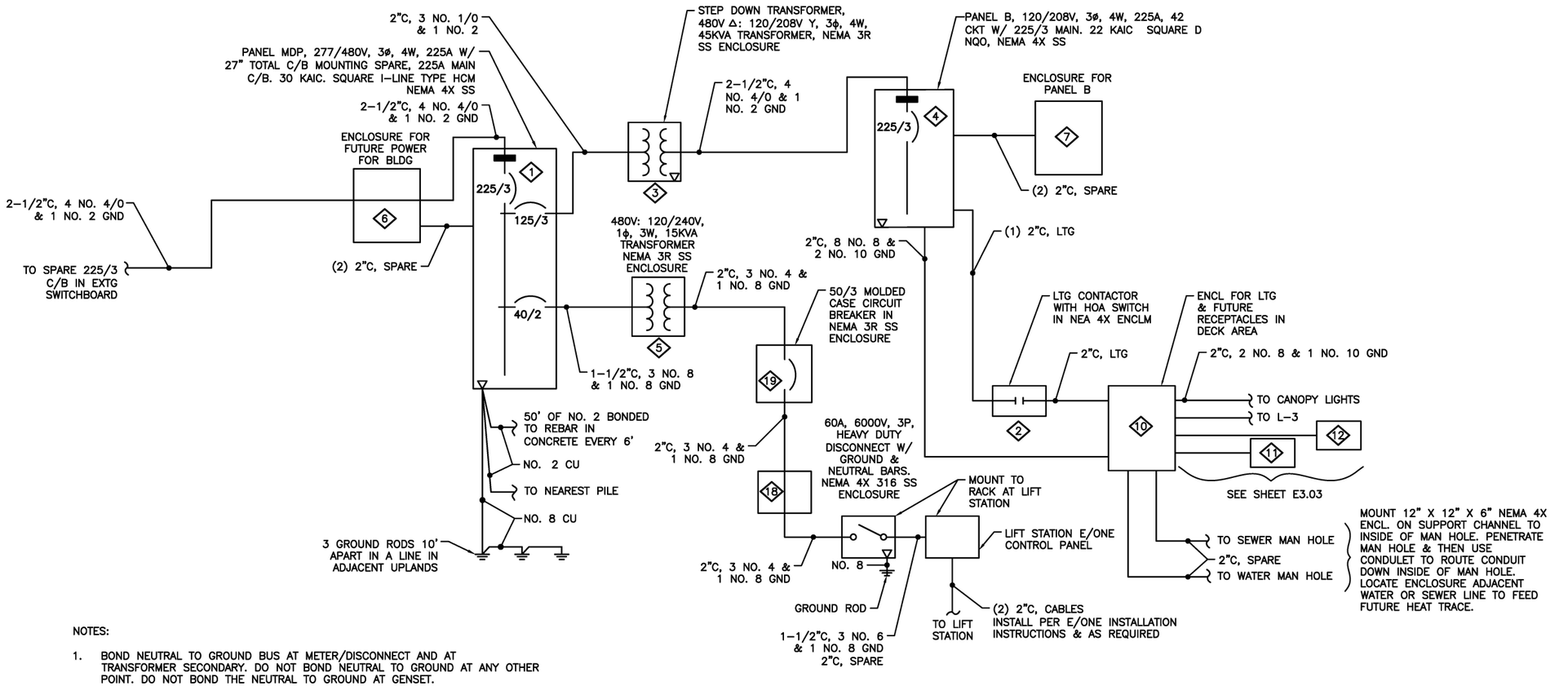

NOTES:

1. BOND NEUTRAL TO GROUND BUS AT METER/DISCONNECT AND AT TRANSFORMER SECONDARY. DO NOT BOND NEUTRAL TO GROUND AT ANY OTHER POINT. DO NOT BOND THE NEUTRAL TO GROUND AT GENSET.
2. THE TRANSFORMER SECONDARY FEEDER THAT FEEDS PANEL G SHALL BE NO MORE THAN 10' LONG. SAME FOR FEEDER TO 5D/3 C/B FROM TRANSFORMER (5)
3. SEE EQUIPMENT SCHEDULE, SHEET E2.02 FOR (#) EQUIPMENT NUMBERS.

(1) SINGLE LINE DIAGRAM
NO SCALE

CITY & BOROUGH OF JUNEAU DOCKS & HARBORS

MORRIS ENGINEERING GROUP INC
2375 Jordan Avenue #7, Juneau, AK 99801
Phone: 907-789-3350, License: AECL1010

REVISIONS

REV.	DATE	DESCRIPTION	DWN.	CKD.	APP.

PND ENGINEERS, INC.
9360 Glacier Highway Ste 100
Juneau, Alaska 99801
Phone: 907-586-2093
Fax: 907-586-2099
www.pndengineers.com

DESIGN: MGM CHECKED: MGM
DRAWN: JRW APPROVED: MGM
SCALE:

STATE OF ALASKA 49TH
Mark G. Morris
May 23, 2019
No. EE 8813
REGISTERED PROFESSIONAL ENGINEER
DATE: 5/23/2019

DOWNTOWN WATERFRONT IMPROVEMENTS PHASE I
CBJ CONTRACT NO. DH19-014

SHEET TITLE: **SINGLE LINE DIAGRAM**

PND PROJECT NO.: 182045 C.A.N. NO.: AECC250

E2.01

EQUIPMENT SCHEDULE

1. PANEL MDP, MOUNT TOP AT 72" AFG, SQUARE D I-LINE. 277/480V, 3ϕ, 4 WIRE, 225 AMP, W/ 225 AMP MAIN. SEE SINGLE LINE DIAGRAM, E2.01.
2. LIGHTING CONTACTOR. 30A, 30 KAIC, 6 POLE LIGHTING CONTACTOR WITH HOA SWITCH. CONTROL ON AUTOSIDE WITH NEMA RATED PHOTOCELL MOUNTED ON CONDUIT ON RACK AT 6'. MOUNT IN J-BOX TO SHIELD FROM SITE LIGHTING. USE CONTACTOR TO CONTROL EXTERIOR LIGHTS. SEE LIGHTING CONTROL SCHEMATIC, SHEET E3.03.
3. STEP DOWN TRANSFORMER. 480VΔ:120/208V Y, 3ϕ, 4 WIRE, 45 KVA. FLOOR MOUNT WITH COPPER WINDINGS. SQUARE D EX45ST3HCU. BOLT TO PLATE. DRILL AND TAP PLATE. SEE STRUCTURAL.
4. PANEL B. MOUNT TOP AT 72" AFF. SQUARE D NQO. SERIES. 120/280V, 3ϕ, 4 WIRE, 225 AMP, W/ 225A MAIN, 22 KAIC, 42 CKT. SEE SINGLE LINE DIAGRAM, E2.01.
5. NEMA 3R TRANSFORMER. STAINLESS STEEL ENCLOSURE, 480V:120/240V 1ϕ, 3W, 15 KVA. BOLT TO PLATE. DRILL AND TAP PLATE. SEE STRUCTURAL.
6. 24" X 24" X 12" NEMA 4X ENCLOSURE FOR FUTURE POWER TO BUILDING MOUNT TO SUPPORT CHANNEL ON UNDERSIDE OF DECK SPANNING BEAMS.
7. 24" X 24" X 12" NEMA 4X ENCLOSURE FOR PANEL B MOUNT TO SUPPORT CHANNEL ON UNDERSIDE OF DECK SPANNING BEAMS.
8. 24" X 24" X 12" NEMA 4X ENCLOSURE FOR FUTURE CBJ NETWORK FIBER CABLE TO BUILDING. MOUNT TO UNDERSIDE OF DECK ON SUPPORT CHANNEL SPANNING BEAMS.
9. 24" X 24" X 12" NEMA 4X ENCLOSURE, MOUNT ON SUPPORT CHANNEL TO UNDERSIDE OF DECK (SAME FOR OTHER ENCLOSURES). ACS TELEPHONE. MOUNT TO UNDERSIDE OF DECK ON SUPPORT CHANNEL SPANNING BEAMS.
10. 24" X 24" X 12" NEMA 4X ENCLOSURE FOR FUTURE LIGHTING/RECEPTACLES IN DECK AREA. MOUNT TO UNDERSIDE OF DECK WITH SUPPORT CHANNEL.
11. 24" X 24" X 12" NEMA 4X ENCLOSURE FOR FUTURE LIGHTING/RECEPTACLES IN DECK AREA. MOUNT TO UNDERSIDE OF DECK WITH SUPPORT CHANNEL.
12. 24" X 24" X 12" NEMA 4X ENCLOSURE FOR FUTURE LIGHTING/RECEPTACLES IN DECK AREA. MOUNT TO UNDERSIDE OF DECK WITH SUPPORT CHANNEL.
13. 24" X 24" X 12" NEMA 4X ENCLOSURE FOR FUTURE CAMERA. MOUNT TO UNDERSIDE OF DECK ON SUPPORT CHANNEL SPANNING BEAMS.
14. 24" X 24" X 12" NEMA 4X ENCLOSURE FOR FUTURE CAMERA. MOUNT TO UNDERSIDE OF DECK ON SUPPORT CHANNEL SPANNING BEAMS.
15. 24" X 24" X 12" NEMA 4X ENCLOSURE FOR FUTURE CAMERA. MOUNT TO UNDERSIDE OF DECK ON SUPPORT CHANNEL SPANNING BEAMS.
16. LIFT STATION CONTROL PANEL, E/ONE, SEE CIVIL. MOUNT TO RACK, DETAIL 2, SHEET E2.03.
17. HEAVY DUTY DISCONNECT, 60A, 600V, 3P, WITH GROUND AND NEUTRAL BARS. NEMA 4X 316 SS ENCLOSURE. MOUNT TO RACK, DETAIL 2, SHEET E2.03.
18. 24" X 24" X 12" NEMA 4X ENCLOSURE FOR LIFT STATION POWER MOUNT TO SUPPORT CHANNEL ON UNDERSIDE OF DECK SPANNING BEAMS.
19. 50/3 MOLDED CASE CIRCUIT BREAKER IN NEMA 3R SS ENCLOSURE. MOUNT TO RACK, DETAIL 1, E2.03

PANEL B		SIZE	VOLTS, PHASE			MOUNTING		MAIN	LOCATION	
		225A	120/208V, 3ϕ, 4W			SURFACE		225/3	RACK ON DECK	
CKT NO.	DESCRIPTION	C/B SIZE	KVA					C/B SIZE	DESCRIPTION	CKT NO.
			CKT	Aϕ	Bϕ	Cϕ	CKT			
1	RECEPTACLE IN DECK (11)	20/1	0.0	0.4			0.4	20/2	CANOPY LIGHTING	2
3	RECEPTACLE IN DECK (11)	20/1	0.0		0.4		0.4	–	–	4
5	RECEPTACLE IN DECK (12)	20/1	0.0			0.5	0.5	20/2	LIGHTING IN PARKING AREA	6
7	RECEPTACLE IN DECK (12)	20/1	0.0	0.5			0.5	–	–	8
9	SPARE		0.0		0.0		0.0	20/2	LUMINAIRES ON DECK (11)	10
11			0.0			0.0	0.0	–	–	12
13			0.0	0.0			0.0	20/2	LUMINAIRES ON DECK (12)	14
15			0.0		0.0		0.0	–	–	16
17			0.0			0.0	0.0	20/1	SPARE	18
19			0.0	0.0			0.0			20
21			0.0		0.0		0.0			22
23			0.0			0.0	0.0			24
25			0.0	0.0			0.0			26
27			0.0		0.0		0.0			28
29			0.0			0.0	0.0			30
31			0.0	0.0			0.0			32
33			0.0		0.0		0.0			34
35			0.0			0.0	0.0			36
37			0.0	0.0			0.0			38
39			0.0		0.0		0.0			40
41			0.0			0.0	0.0			42
TOTAL CONNECTED LOAD = 1.8 KVA/ 5 AMPS				0.9	0.4	0.5				

PANEL MDP		SIZE	VOLTS, PHASE			MOUNTING		MAIN	LOCATION	
		225A	277/480V, 3ϕ, 4W			SURFACE		225/3	RACK ON DECK	
CKT NO.	DESCRIPTION	C/B SIZE	KVA					C/B SIZE	DESCRIPTION	CKT NO.
			CKT	Aϕ	Bϕ	Cϕ	CKT			
1			0.0	1.0			1.0	125/3	PANEL B VIA TRANSFORMER	2
3			0.0		1.0		1.0	–	–	4
5			0.0			1.0	1.0	–	–	6
7			0.0	3.5			3.5	40/2	E/ONE LIFT STATION	8
9			0.0		3.5		3.5	–	–	10
11			0.0			0.0	0.0			12
13			0.0	0.0			0.0			14
15			0.0		0.0		0.0			16
17			0.0			0.0	0.0			18
TOTAL CONNECTED LOAD = 10.0 KVA/ 12 AMPS				4.5	4.5	1.0				
* PANEL MDP IS A PANEL WITH 27 INCHES TOTAL CIRCUIT BREAKER MOUNTING SPACE										

CITY & BOROUGH OF JUNEAU DOCKS & HARBORS

MORRIS ENGINEERING GROUP INC
2375 Jordan Avenue #7, Juneau, AK 99801
Phone: 907-789-3350, License: AECL1010

REVISIONS

REV.	DATE	DESCRIPTION	DWN.	CKD.	APP.

PND ENGINEERS, INC.
9360 Glacier Highway Ste 100
Juneau, Alaska 99801
Phone: 907-586-2093
Fax: 907-586-2099
www.pndengineers.com

DESIGN: MGM CHECKED: MGM
DRAWN: JRW APPROVED: MGM
SCALE:

STATE OF ALASKA 49TH
Mark G. Morris
May 23, 2019
No. EE 8613
REGISTERED PROFESSIONAL ENGINEER
DATE: 5/23/2019

DOWNTOWN WATERFRONT IMPROVEMENTS PHASE I
CBJ CONTRACT NO. DH19-014

SHEET TITLE:
EQUIPMENT & PANEL SCHEDULES

PND PROJECT NO.: 182045 C.A.N. NO.: AECC250

E2.02

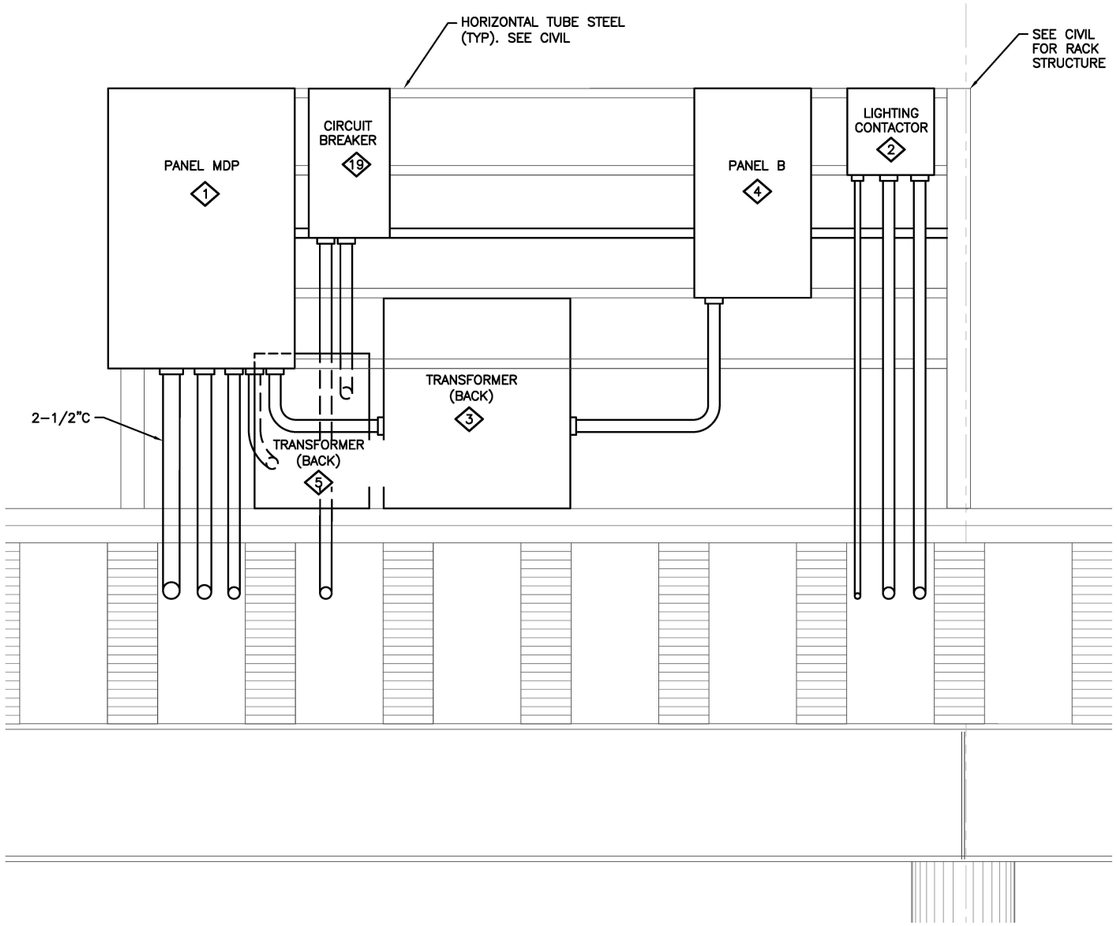

1 ELECTRICAL RACK ELEVATION

3" 6" 1' 2'

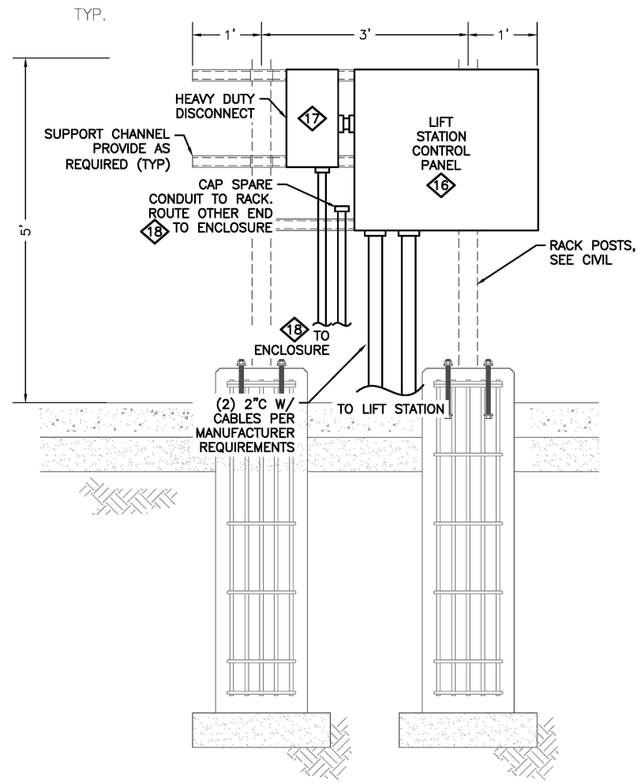

2 LIFT STATION SUPPORT RACK

3" 6" 1' 2'

NOTE:

1. SEE EQUIPMENT SCHEDULE, SHEET E2.02 FOR ◇# EQUIPMENT NUMBERS.

CITY & BOROUGH OF JUNEAU DOCKS & HARBORS

MORRIS ENGINEERING GROUP INC
2375 Jordan Avenue #7, Juneau, AK 99801
Phone: 907-789-3350, License: AECL1010

REVISIONS

REV.	DATE	DESCRIPTION	DWN.	CKD.	APP.

PND ENGINEERS, INC.
9360 Glacier Highway Ste 100
Juneau, Alaska 99801
Phone: 907-586-2093
Fax: 907-586-2099
www.pndengineers.com

DESIGN: MGM CHECKED: MGM
DRAWN: JRW APPROVED: MGM
SCALE:

STATE OF ALASKA 49TH
Mark G. Morris
May 23, 2019
No. EE 8613
REGISTERED PROFESSIONAL ENGINEER
DATE: 5/23/2019

DOWNTOWN WATERFRONT IMPROVEMENTS PHASE I
CBJ CONTRACT NO. DH19-014

SHEET TITLE:
ELECTRICAL RACK ELEVATIONS

PND PROJECT NO.: 182045 C.A.N. NO.: AECC250

E2.03

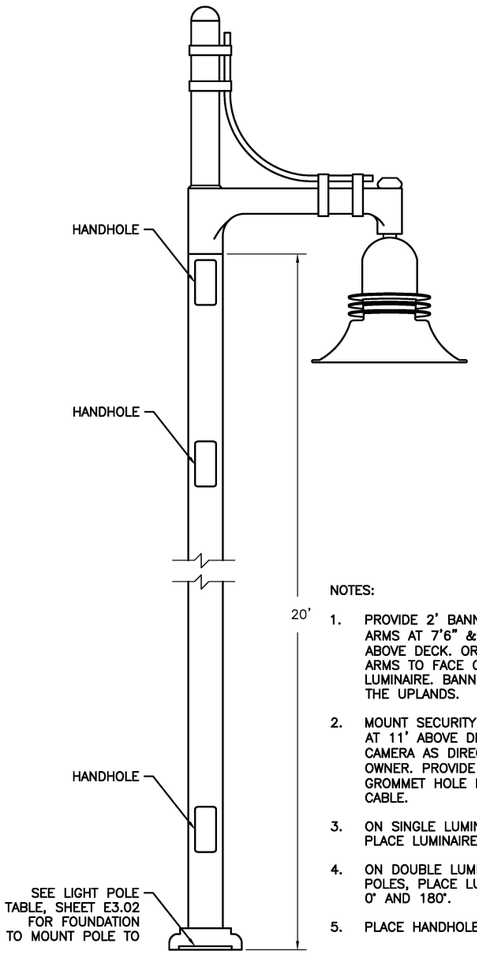

NOTES:

1. PROVIDE 2' BANNER ARMS. ARMS AT 7'6" & 12'6" ABOVE DECK. ORIENT BANNER ARMS TO FACE OPPOSITE LUMINAIRE. BANNERS FACE THE UPLANDS.
2. MOUNT SECURITY CAMERAS AT 11' ABOVE DECK. ORIENT CAMERA AS DIRECTED BY OWNER. PROVIDE 3/4" GROMMET HOLE FOR CAMERA CABLE.
3. ON SINGLE LUMINAIRE POLES, PLACE LUMINAIRE AT 0°.
4. ON DOUBLE LUMINAIRE POLES, PLACE LUMINAIRES AT 0° AND 180°.
5. PLACE HANDHOLES AT 90°.

① TYPE "A" & "B" LUMINAIRE ELEVATION
NO SCALE

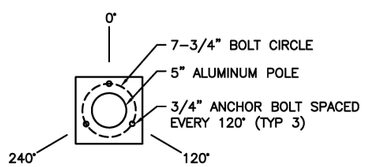

② BOLT CIRCLE DETAIL
NO SCALE

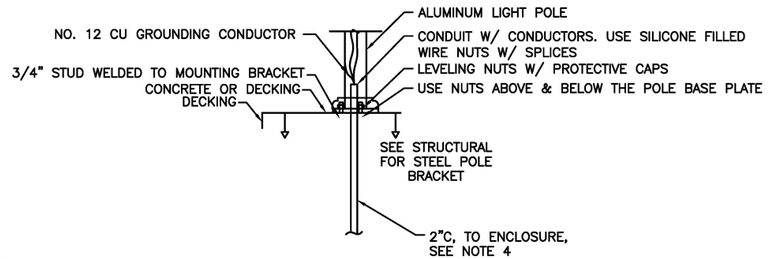

NOTES:

1. COORDINATE WITH OTHER TRADES TO ENSURE THAT THE STUD PATTERN ON THE MOUNTING BRACKET MATCHES LIGHT POLE BASE BOLT HOLES.
2. SPLICE CONDUCTORS INSIDE POLE ADJACENT TO HANDHOLE IF THERE IS ROOM. USE COMPRESSION SPLICES WITH HEAT SHRINK. IF THERE IS NO ROOM IN POLE, SPLICE IN J–BOX.
3. LIGHT POLE MOUNTING BRACKETS CHANGE BASED UPON WHERE ON THE STRINGER THEY ARE LOCATED. COORDINATE WITH DOCK FABRICATOR, INSTALLER, AND GENERAL CONTRACTOR FOR THE LOCATION AND TYPE OF MOUNTING BRACKET TO USE FOR EACH POLE. THE TYPE OF MOUNTING BRACKET CHANGES BASED UPON THE DOCK STRUCTURE. SEE STRUCTURAL SHEET S1.05 FOR THE TYPES OF MOUNTING BRACKETS. SEE TABLE FOR SPECIFIC BRACKET TO BE USED.
4. MOUNT A 12" X 12" X 6" NEMA 4X STAINLESS STEEL ENCLOSURE TO A GLULAM STRINGER BELOW LIGHT POLE FOUNDATION. ROUTE 2" CONDUIT FROM ENCLOSURE UP TO CENTER OF LIGHT POLE.

③ STEEL BRACKET LIGHT POLE BASE DETAIL
NO SCALE

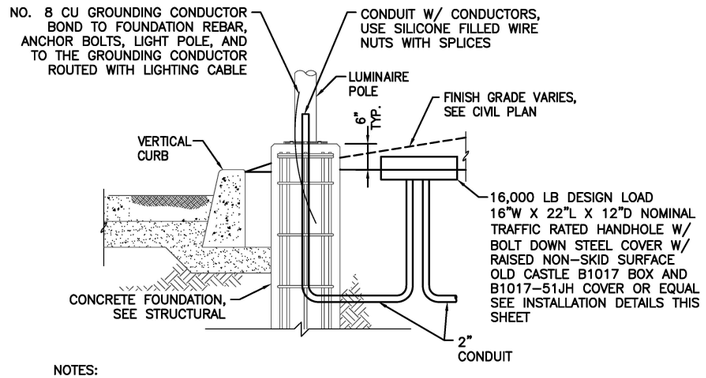

NOTES:

1. SEE CIVIL FOR DETAILS NOT CALLED OUT.
2. PROVIDE 3/4" ANCHOR BOLTS. 24" WITH LARGE WASHERS AT HEAD. ASTM A–36 WITH MINIMUM YIELD STRENGTH OF 36 KIPS. MOUNT POLE TO LEVELING NUTS ON ANCHOR BOLTS.

④ CONCRETE FOUNDATION LIGHT POLE BASE DETAIL
NO SCALE

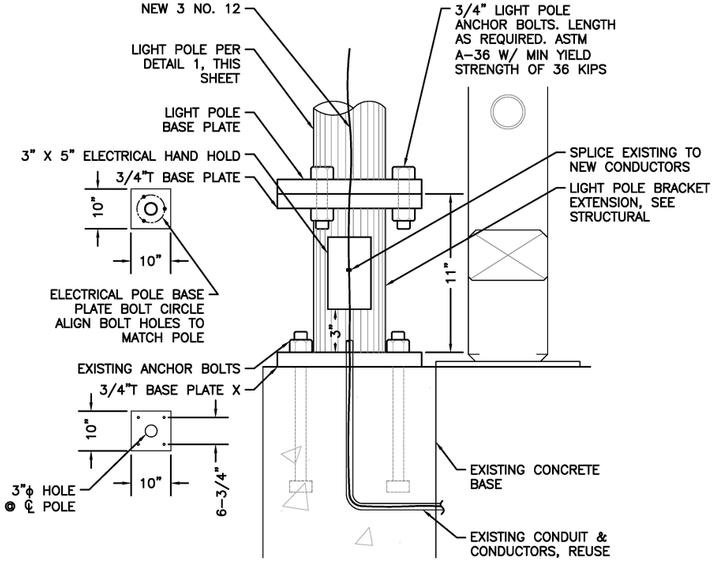

⑤ BRACKET EXTENSION LIGHT POLE BASE DETAIL
NOTE: USE FOR LIGHT POLE NOS. L–17 TO L–29
NO SCALE

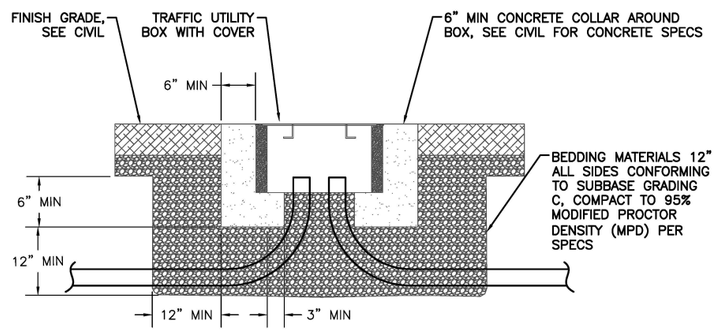

⑥ HANDHOLE DETAIL
NO SCALE

REVISIONS

REV.	DATE	DESCRIPTION	DWN.	CKD.	APP.

CITY & BOROUGH OF JUNEAU — DOCKS & HARBORS

MORRIS ENGINEERING GROUP INC
2375 Jordan Avenue #7, Juneau, AK 99801
Phone: 907-789-3350, License: AECL1010

PND ENGINEERS, INC.
9360 Glacier Highway Ste 100
Juneau, Alaska 99801
Phone: 907-586-2093
Fax: 907-586-2099
www.pndengineers.com

DESIGN: MGM CHECKED: MGM
DRAWN: JRW APPROVED: MGM
SCALE:
DATE: 5/23/2019

STATE OF ALASKA — 49TH — May 23, 2019 — Mark G. Morris — No. EE 8813 — REGISTERED PROFESSIONAL ENGINEER

DOWNTOWN WATERFRONT IMPROVEMENTS PHASE I
CBJ CONTRACT NO. DH19-014

SHEET TITLE: **20' POLE DETAILS**

PND PROJECT NO.: 182045 C.A.N. NO.: AECC250

E3.01

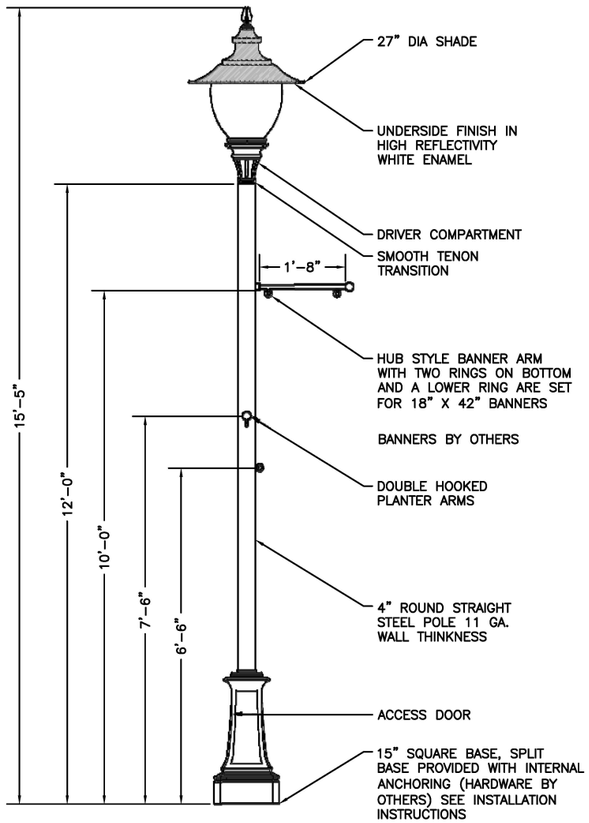

① TYPE "C" LUMINAIRE ELEVATION

4" 8" 16" 32"

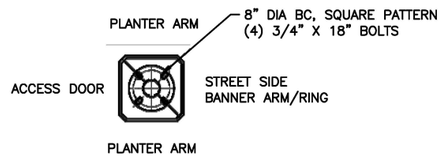

② BOLT CIRCLE DETAIL

4" 8" 16" 32"

LIGHT POLE TABLE

LIGHT POLE NO.	FOUNDATION TYPE (SEE STRUCTURAL)	FOUNDATION DESCRIPTION	REMARKS	BANNER ARMS
L–1	TYPE 6	CONCRETE FOUNDATION	SEE SHEET E3.01, DETAILS 1 & 4	NO
L–2	TYPE 4	CONCRETE FOUNDATION	SEE SHEET E3.01, DETAILS 1 & 4	NO
L–3	TYPE 4	CONCRETE FOUNDATION	SEE SHEET E3.01, DETAILS 1 & 4	NO
L–4	TYPE 5	STEEL BRACKET	SEE SHEET E3.01, DETAILS 1 & 3	NO
L–5	TYPE 3	STEEL BRACKET	SEE SHEET E3.01, DETAILS 1 & 3	YES
L–6	TYPE 3	STEEL BRACKET	SEE SHEET E3.01, DETAILS 1 & 3	YES
L–7	TYPE 3	STEEL BRACKET	SEE SHEET E3.01, DETAILS 1 & 3	YES
L–8	TYPE 3	STEEL BRACKET	SEE SHEET E3.01, DETAILS 1 & 3	YES
L–9	TYPE 3	STEEL BRACKET	SEE SHEET E3.01, DETAILS 1 & 3	YES
L–10	TYPE 3	STEEL BRACKET	SEE SHEET E3.01, DETAILS 1 & 3	YES
L–11	TYPE 1	STEEL BRACKET	SEE SHEET E3.01, DETAILS 1 & 3	NO
L–12	TYPE 1	STEEL BRACKET	SEE SHEET E3.01, DETAILS 1 & 3	NO
L–13	TYPE 1 SIM	STEEL BRACKET	SEE SHEET E3.01, DETAILS 1 & 3	NO
L–14	TYPE 7	CONCRETE FOUNDATION	SEE SHEET E3.01, DETAILS 1 & 4 **	NO
L–15	TYPE 7	CONCRETE FOUNDATION	SEE SHEET E3.01, DETAILS 1 & 4	NO
L–16	TYPE 6	CONCRETE FOUNDATION	SEE SHEET E3.01, DETAIL 4 & DETAIL 1, THIS SHEET	YES
L–17	TYPE 3	BRACKET EXTENSION	SEE SHEET E3.01, DETAILS 1 & 5	YES
L–18	TYPE 3	BRACKET EXTENSION	SEE SHEET E3.01, DETAILS 1 & 5	YES
L–19	TYPE 3	BRACKET EXTENSION	SEE SHEET E3.01, DETAILS 1 & 5	YES
L–20	TYPE 3	BRACKET EXTENSION	SEE SHEET E3.01, DETAILS 1 & 5	YES
L–21	TYPE 3	BRACKET EXTENSION	SEE SHEET E3.01, DETAILS 1 & 5	YES
L–22	TYPE 3	BRACKET EXTENSION	SEE SHEET E3.01, DETAILS 1 & 5	YES
L–23	TYPE 3	BRACKET EXTENSION	SEE SHEET E3.01, DETAILS 1 & 5	YES
L–24	TYPE 3	BRACKET EXTENSION	SEE SHEET E3.01, DETAILS 1 & 5	YES
L–25	TYPE 3	BRACKET EXTENSION	SEE SHEET E3.01, DETAILS 1 & 5	YES
L–26	TYPE 3	BRACKET EXTENSION	SEE SHEET E3.01, DETAILS 1 & 5	YES
L–27	TYPE 3	BRACKET EXTENSION	SEE SHEET E3.01, DETAILS 1 & 5	YES
L–28	TYPE 3	BRACKET EXTENSION	SEE SHEET E3.01, DETAILS 1 & 5	YES
L–29	TYPE 3	BRACKET EXTENSION	SEE SHEET E3.01, DETAILS 1 & 5	YES

** NO HANDHOLE

LUMINAIRE SCHEDULE

TYPE	DESCRIPTION	MANUFACTURER	LAMPS	REMARKS
A	20' LIGHT POLE, ARM, & LUMINAIRE WITH FLUTED FULL CUTOFF SHADE, TYPE III DISTRIBUTION, BLACK	COOPER INVUE EPIC MEDIUM MODERN SERIES EMM–E04–LED–E1–T3–SR–FL–BK–8030 W/VA6110–BK (SINGLE ARM) OR VA6117–BK (DOUBLE ARM) AND ARX–ST12–NGN4 ALUMINUM POLE	LED, 3,000K, 80 CRI, 11,700 LUMENS	NO SUBSTITUTIONS, PROVIDE WITH 120–277V DRIVER. MOUNT SECURITY CAMERAS TO POLE AT 11' AFG, USE CAMERA POLE MOUNT BRACKET WITH STAINLESS STEEL BAND, SEE DETAIL. MOUNT BANNER ARMS AT 12'6" & 7'6", SEE DETAILS.
B	20' LIGHT POLE, ARM, & LUMINAIRE WITH FLUTED FULL CUTOFF SHADE, TYPE IV DISTRIBUTION, BLACK	COOPER INVUE EPIC MEDIUM MODERN SERIES EMM–E04–LED–E1–T4–SR–FL–BK–8030 W/VA6110–BK (SINGLE ARM) OR VA6117–BK (DOUBLE ARM) AND ARX–ST12–NGN4 ALUMINUM POLE	LED, 3,000K, 80 CRI, 11,500 LUMENS	NO SUBSTITUTIONS, PROVIDE WITH 120–277V DRIVER. MOUNT SECURITY CAMERAS TO POLE AT 11' AFG, USE CAMERA POLE MOUNT BRACKET WITH STAINLESS STEEL BAND, SEE DETAIL. MOUNT BANNER ARMS AT 12'6" & 7'6", SEE DETAILS.
C	12' LIGHT POLE W/ POLYCARBONATE ACORN STYLE LED, TYPE III DISTRIBUTOR	STERNBERG LIGHTING M960SRLED–4ARC45T4–MDL03–P/BKT LITE	LED, 3,500K, 5,500 LUMENS, 64 WATTS	MOUNT TO CONCRETE BASE WITH PLANTER ARMS & BANNER ARM PER DETAIL 3, SHEET E3.02
D	TRADITIONAL WALL MOUNTED ARM WITH 45° STAP & LUMINAIRE WITH FLUTED FULL CUTOFF SHADE, TYPE III DISTRIBUTION, BLACK	COOPER INVUE EPIC MEDIUM MODERN SERIES EMM–E04–LED–E1–T3–SR–FL–BK–8030 W/VA6153–BK WITH TRADITIONAL WALL MOUNT ARM WITH 45° STRAP	LED, 3,000K, 80 CRI, 11,500 LUMENS	NO SUBSTITUTIONS. 120/277V DRIVER, WALL MOUNT TO PARKING GARAGE STRUCTURE.
F	1–3/4" DOWNLIGHT WITH ROUND ACRYLIC ACCESSORY. 1.31" X 2.8" DIAMETER TRIM, FROSTED ACRYLIC INSIDE, POLISHED OUTSIDE	CALCULITE FRAME: C2L–09–DL–935–R–Z10U DECORATIVE ELEMENT: D2L–R02	LED, 3,500K 900 LUMENS, 90 CRI	120–277V DRIVER, COORDINATE WITH SOFFIT INSTALLATION FOR CUTTING HOLES IN SOFFIT AND FLUSH MOUNTING. VERIFY CORRECT PARTS ARE BID AND ORDERED FOR A FLUSH INSTALLATION.

CITY & BOROUGH OF JUNEAU DOCKS & HARBORS

MORRIS ENGINEERING GROUP INC
2375 Jordan Avenue #7, Juneau, AK 99801
Phone: 907-789-3350, License: AECL1010

REVISIONS

REV.	DATE	DESCRIPTION	DWN.	CKD.	APP.

PND ENGINEERS, INC.
9360 Glacier Highway Ste 100
Juneau, Alaska 99801
Phone: 907-586-2093
Fax: 907-586-2099
www.pndengineers.com

DESIGN: MGM CHECKED: MGM
DRAWN: JRW APPROVED: MGM
SCALE:

STATE OF ALASKA 49TH
Mark G. Morris
May 23, 2019
No. EE 8613
REGISTERED PROFESSIONAL ENGINEER
DATE: 5/23/2019

DOWNTOWN WATERFRONT IMPROVEMENTS PHASE I
CBJ CONTRACT NO. DH19-014

SHEET TITLE:
12' POLE DETAILS, LIGHT POLE TABLE & LUMINAIRE SCHEDULE

PND PROJECT NO.: 182045 C.A.N. NO.: AECC250

E3.02

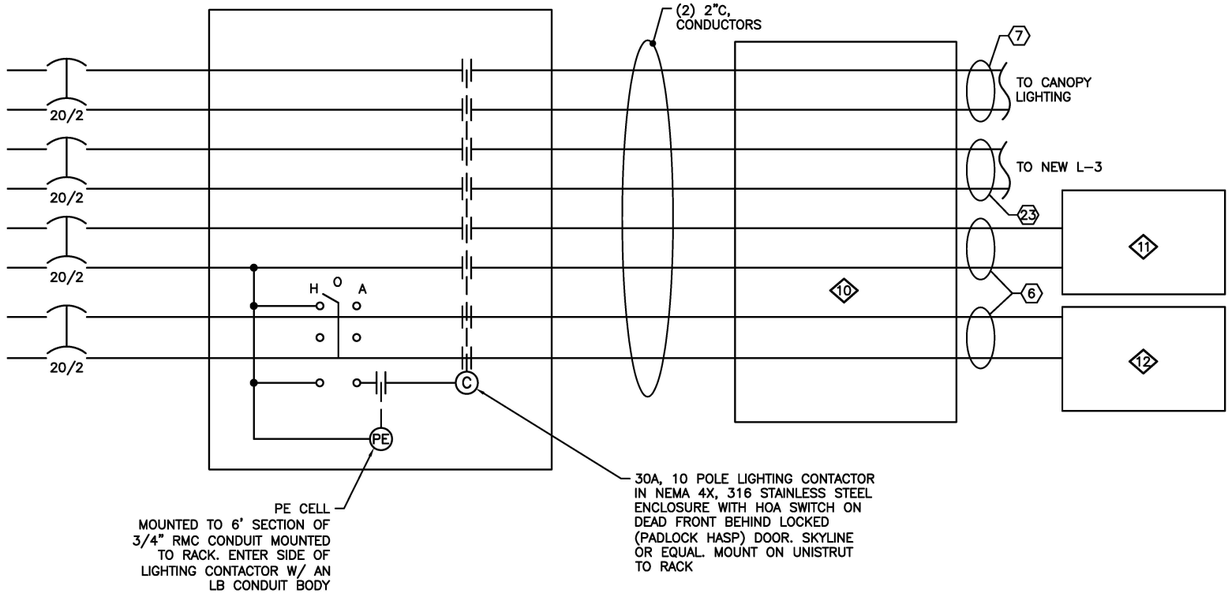

1 SITE LIGHTING CONTROL SCHEMATIC
NOT TO SCALE

NOTES:

1. SEE SHEET E1.02 FOR ⟨#⟩
2. SEE EQUIPMENT SCHEDULE, SHEET E2.02 FOR ⟨#⟩ EQUIPMENT NUMBERS.

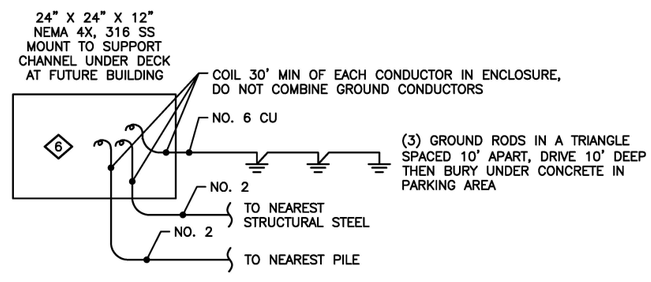

2 FUTURE BUILDING POWER SINGLE LINE DIAGRAM
NOT TO SCALE

REVISIONS

REV.	DATE	DESCRIPTION	DWN.	CKD.	APP.

CITY & BOROUGH OF JUNEAU DOCKS & HARBORS
MORRIS ENGINEERING GROUP INC
2375 Jordan Avenue #7, Juneau, AK 99801
Phone: 907-789-3350, License: AECL1010
PND ENGINEERS, INC.
9360 Glacier Highway Ste 100
Juneau, Alaska 99801
Phone: 907-586-2093
Fax: 907-586-2099
www.pndengineers.com

DESIGN: MGM CHECKED: MGM
DRAWN: JRW APPROVED: MGM
SCALE: NTS
DATE: 5/23/2019

STATE OF ALASKA 49TH Mark G. Morris May 23, 2019 No. EE 8813 REGISTERED PROFESSIONAL ENGINEER

DOWNTOWN WATERFRONT IMPROVEMENTS PHASE I
CBJ CONTRACT NO. DH19-014

SHEET TITLE: LTG CONTROL SCHEMATIC & FUTURE POWER SINGLE LINE

PND PROJECT NO.: 182045 C.A.N. NO.: AECC250

E3.03

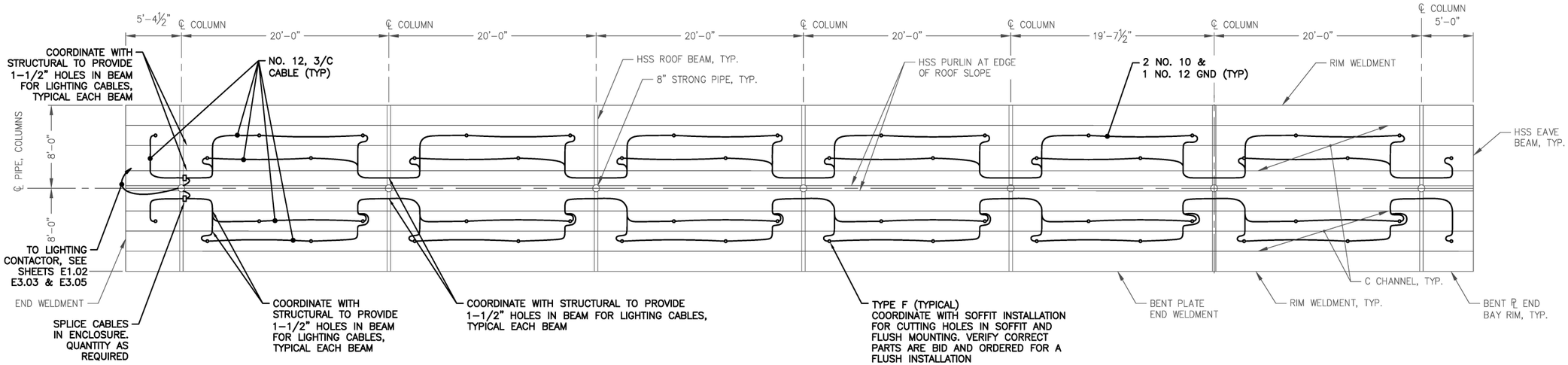

NOTE:

1. ROUTE CONDUIT UNDER DECK, STUB UP INTO COLUMN. SPLICE TO (2) NO. 12, 3/C TYPE 500W OR G-GC CABLE AT HANDHOLE. SEE STRUCTURAL DRAWINGS FOR CANOPY.

① PARKING CANOPY PLAN - ELECTRICAL

30" 5' 10'

CITY & BOROUGH OF JUNEAU DOCKS & HARBORS

MORRIS ENGINEERING GROUP INC
2375 Jordan Avenue #7, Juneau, AK 99801
Phone: 907-789-3350, License: AECL1010

REVISIONS

REV.	DATE	DESCRIPTION	DWN.	CKD.	APP.

PND ENGINEERS, INC.
9360 Glacier Highway Ste 100
Juneau, Alaska 99801
Phone: 907-586-2093
Fax: 907-586-2099
www.pndengineers.com

DESIGN: MGM CHECKED: MGM
DRAWN: JRW APPROVED: MGM
SCALE:

STATE OF ALASKA 49TH
Mark G. Morris
May 23, 2019
No. EE 8813
REGISTERED PROFESSIONAL ENGINEER
DATE: 5/23/2019

DOWNTOWN WATERFRONT IMPROVEMENTS PHASE I
CBJ CONTRACT NO. DH19-014

SHEET TITLE: **PARKING CANOPY PLAN - ELECTRICAL**

PND PROJECT NO.: 182045 C.A.N. NO.: AECC250

E3.04

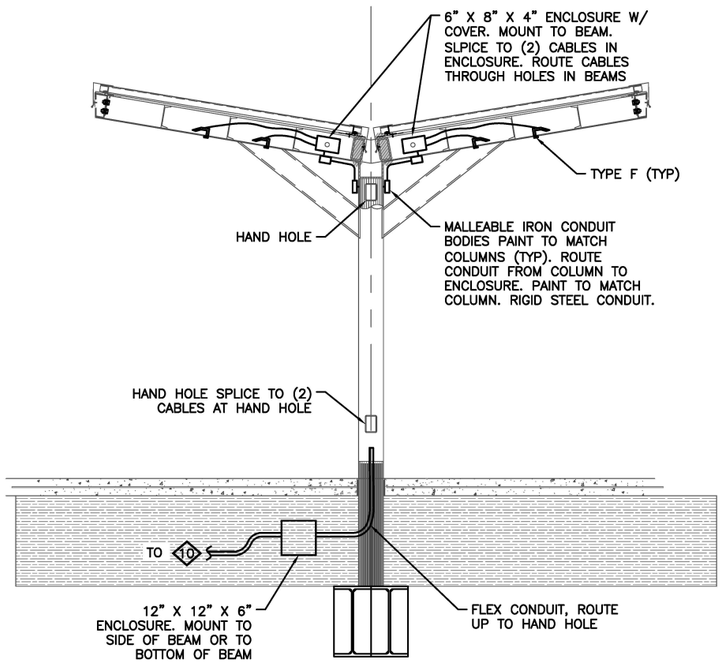

1 TYPICAL PARKING CANOPY SECTION
NOT TO SCALE

CITY & BOROUGH OF JUNEAU DOCKS & HARBORS

MORRIS ENGINEERING GROUP INC
2375 Jordan Avenue #7, Juneau, AK 99801
Phone: 907-789-3350, License: AECL1010

REVISIONS

REV.	DATE	DESCRIPTION	DWN.	CKD.	APP.

PND ENGINEERS, INC.
9360 Glacier Highway Ste 100
Juneau, Alaska 99801
Phone: 907-586-2093
Fax: 907-586-2099
www.pndengineers.com

DESIGN: MGM CHECKED: MGM
DRAWN: JRW APPROVED: MGM
SCALE:

STATE OF ALASKA 49TH
Mark G. Morris
May 23, 2019
No. EE 8613
REGISTERED PROFESSIONAL ENGINEER
DATE: 5/23/2019

DOWNTOWN WATERFRONT IMPROVEMENTS PHASE I
CBJ CONTRACT NO. DH19-014

SHEET TITLE:
PARKING CANOPY SECTIONS AND DETAILS - ELECTRICAL

PND PROJECT NO.: 182045 C.A.N. NO.: AECC250

E3.05

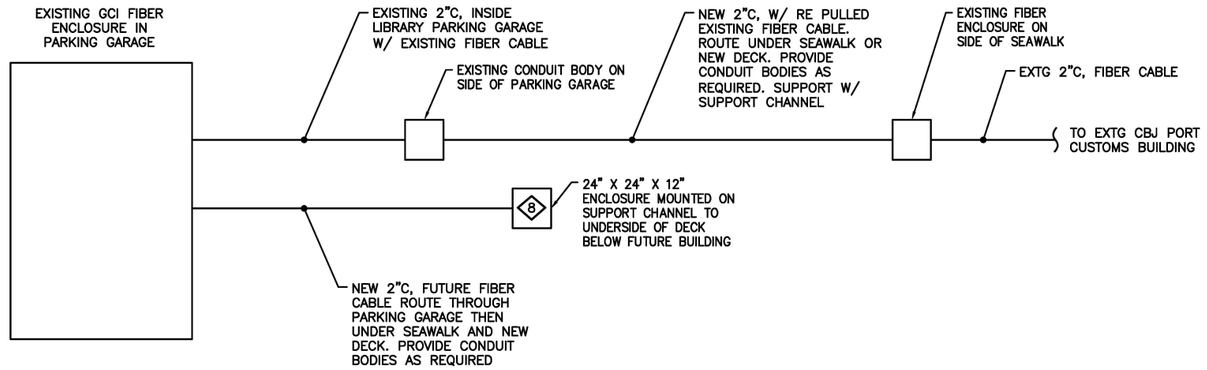

NOTES:

1. COORDINATE WITH GCI AND CBJ MIS TO DISCONNECT AND PULL OUT FIBER CABLE BACK TO EXISTING ENCLOSURE, THEN PULL BACK IN TO RECONNECT IN GCI ENCLOSURE. ARRANGE WITH GCI TO ALLOW CBJ TO USE SEVERAL STRANDS TO SET UP A CONNECTION TO THE FUTURE BUILDING.
2. SEE EQUIPMENT SCHEDULE, SHEET E2.02 FOR ⟨#⟩ EQUIPMENT NUMBERS.

① FIBER CABLE RISER DIAGRAM DIAGRAM

NOT TO SCALE

CITY & BOROUGH OF JUNEAU DOCKS & HARBORS

MORRIS ENGINEERING GROUP INC
2375 Jordan Avenue #7, Juneau, AK 99801
Phone: 907-789-3350, License: AECL1010

REVISIONS

REV.	DATE	DESCRIPTION	DWN.	CKD.	APP.

PND ENGINEERS, INC.
9360 Glacier Highway Ste 100
Juneau, Alaska 99801
Phone: 907-586-2093
Fax: 907-586-2099
www.pndengineers.com

DESIGN: MGM CHECKED: MGM
DRAWN: JRW APPROVED: MGM
SCALE: NTS

STATE OF ALASKA 49TH
Mark G. Morris
May 23, 2019
No. EE 8613
REGISTERED PROFESSIONAL ENGINEER
DATE: 5/23/2019

DOWNTOWN WATERFRONT IMPROVEMENTS PHASE I
CBJ CONTRACT NO. DH19-014

SHEET TITLE: **FIBER CABLE RISER DIAGRAM**

PND PROJECT NO.: 182045 C.A.N. NO.: AECC250

E4.01

NOTES:

1. SEE EQUIPMENT SCHEDULE, SHEET E2.02 FOR ◇# EQUIPMENT NUMBERS.

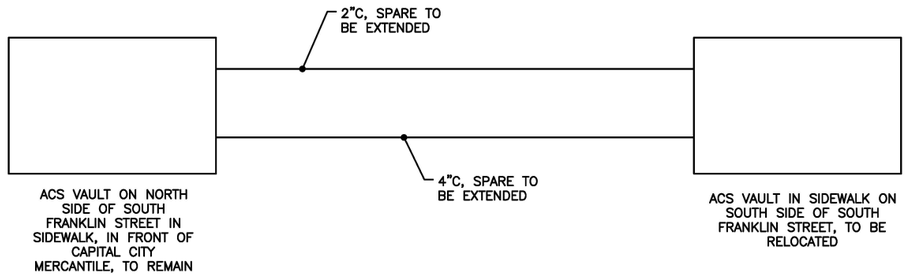

① EXISTING ACS TELEPHONE RISER DIAGRAM
NOT TO SCALE

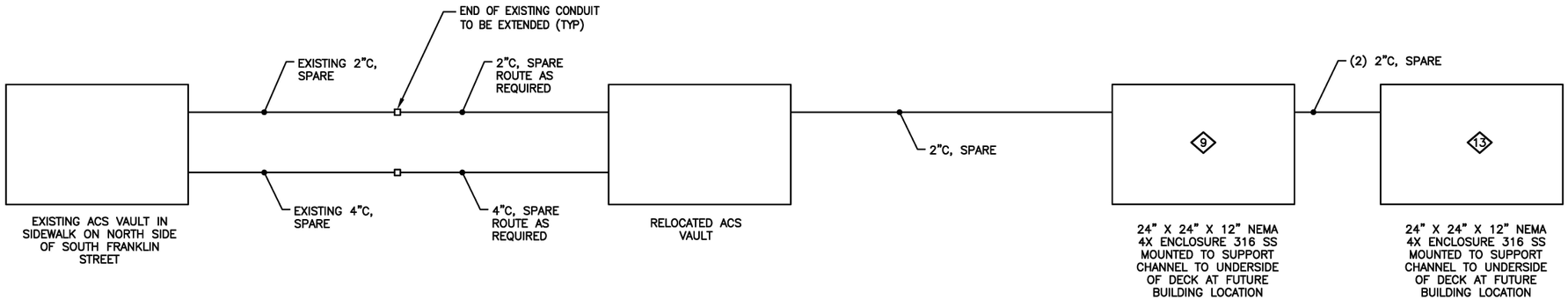

② NEW ACS TELEPHONE RISER DIAGRAM
NOT TO SCALE

CITY & BOROUGH OF JUNEAU DOCKS & HARBORS

MORRIS ENGINEERING GROUP INC
2375 Jordan Avenue #7, Juneau, AK 99801
Phone: 907-789-3350, License: AECL1010

REVISIONS

REV.	DATE	DESCRIPTION	DWN.	CKD.	APP.

PND ENGINEERS, INC.
9360 Glacier Highway Ste 100
Juneau, Alaska 99801
Phone: 907-586-2093
Fax: 907-586-2099
www.pndengineers.com

DESIGN: MGM CHECKED: MGM
DRAWN: JRW APPROVED: MGM
SCALE: NTS

STATE OF ALASKA 49TH
Mark G. Morris
May 23, 2019
No. EE 8613
REGISTERED PROFESSIONAL ENGINEER
DATE: 5/23/2019

DOWNTOWN WATERFRONT IMPROVEMENTS PHASE I
CBJ CONTRACT NO. DH19-014

SHEET TITLE:
EXISTING & NEW ACS RISER DIAGRAM

PND PROJECT NO.: 182045 C.A.N. NO.: AECC250

E4.02

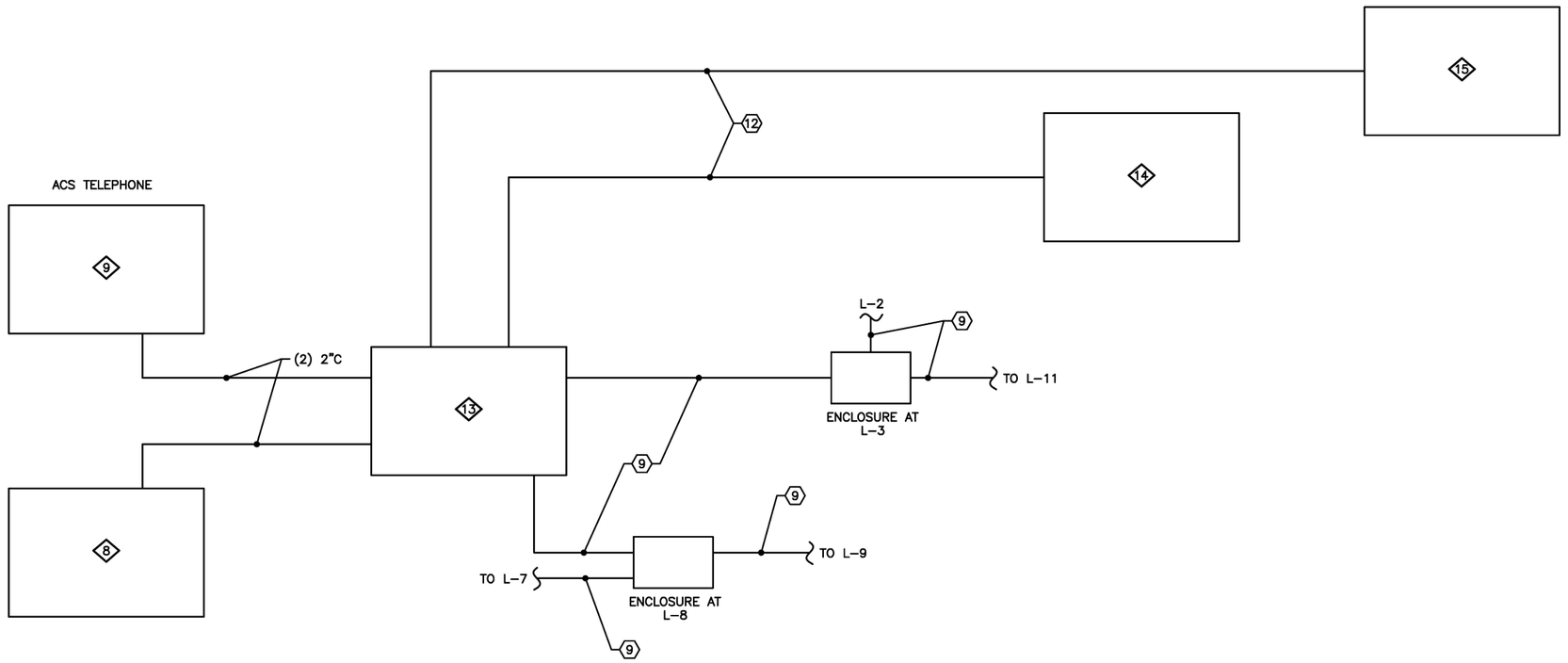

1 SCHEMATIC FOR CAMERAS
NOT TO SCALE

NOTES:

1. CAMERAS TO BE INSTALLED IN FUTURE. CONDUIT, ENCLOSURES, ETC. TO BE INSTALLED IN THIS PROJECT.
2. SEE SHEET E1.02 FOR KEY NOTES.
3. SEE EQUIPMENT SCHEDULE, SHEET E2.02 FOR # EQUIPMENT NUMBERS.

CITY & BOROUGH OF JUNEAU DOCKS & HARBORS

MORRIS ENGINEERING GROUP INC
2375 Jordan Avenue #7, Juneau, AK 99801
Phone: 907-789-3350, License: AECL1010

REVISIONS

REV.	DATE	DESCRIPTION	DWN.	CKD.	APP.

PND ENGINEERS, INC.
9360 Glacier Highway Ste 100
Juneau, Alaska 99801
Phone: 907-586-2093
Fax: 907-586-2099
www.pndengineers.com

DESIGN: MGM CHECKED: MGM
DRAWN: JRW APPROVED: MGM
SCALE:

STATE OF ALASKA 49TH
Mark G. Morris
May 23, 2019
No. EE 8613
REGISTERED PROFESSIONAL ENGINEER
DATE: 5/23/2019

DOWNTOWN WATERFRONT IMPROVEMENTS PHASE I
CBJ CONTRACT NO. DH19-014

SHEET TITLE:
CAMERA SCHEMATIC

PND PROJECT NO.: 182045 C.A.N. NO.: AECC250

E4.03

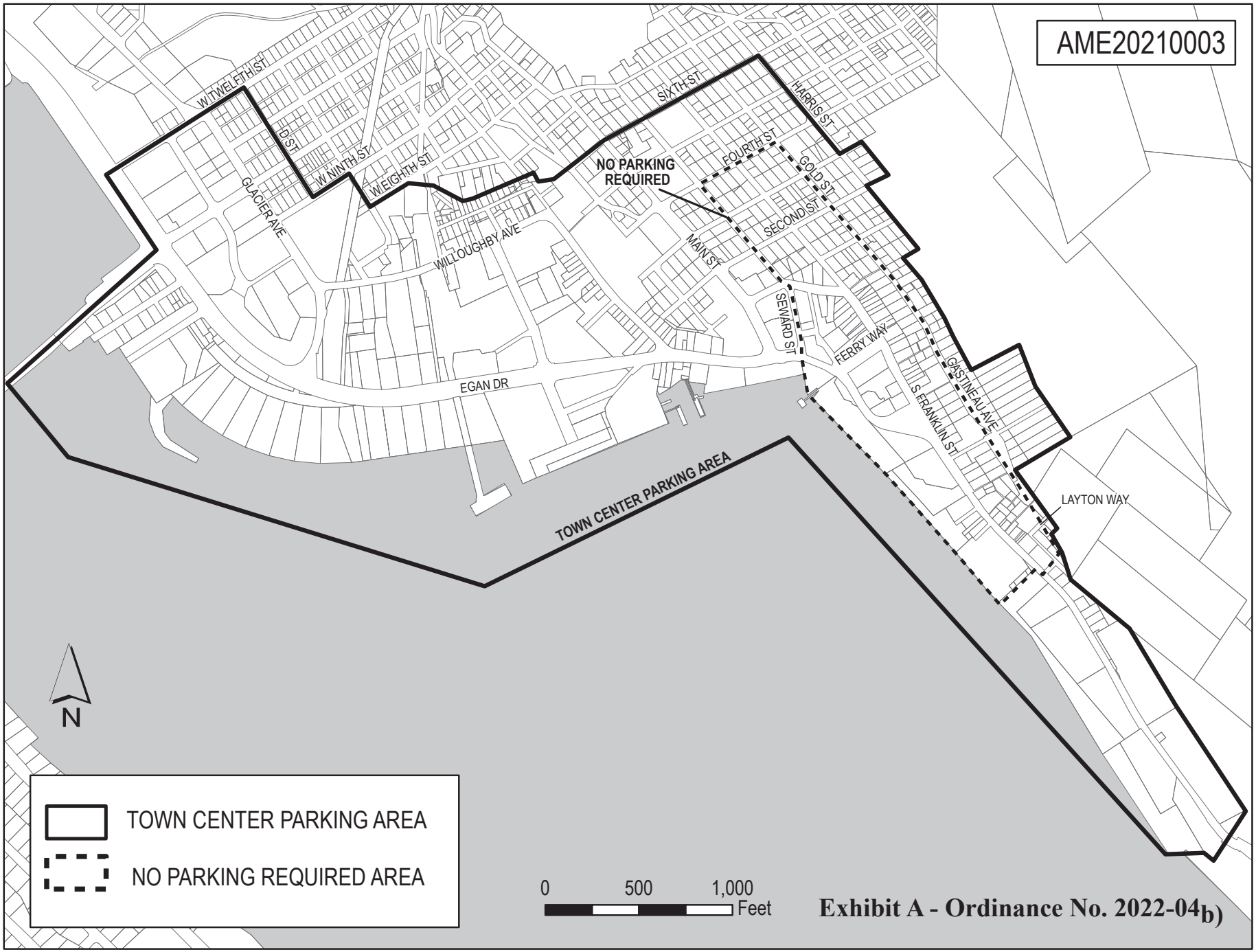

ArcMap Source: P:\quinn\Projects\LAW\ame20210003.mxd
Revised 4/12/2022

Attachment H – No Parking Required Area Map

CITY AND BOROUGH OF JUNEAU
ALASKA'S CAPITAL CITY
COMMUNITY DEVELOPMENT

Historic Resources Advisory Committee
(907) 586-0715
hrac@juneau.org
www.juneau.org/community-development/hrac
155 S. Seward Street • Juneau, AK 99801

February 5, 2026

Reuben Willis, Applicant
251 South Franklin Street, Juneau, Alaska 99801
Juneau Alaska 99801'

RE: proposed Alaska Fly & Dive project, 356 S. Franklin Street

Dear Reuben,

Thank you for bringing your project to our Historic Advisory Committee (HRAC) on February 4, 2026. We greatly appreciate your willingness to work with the Committee.

The proposed project meets historic guidelines and the Committee voted unanimously to recommend approval for this project. Your attention to detail and adherence to historical design features is impressive.

Again, thank you very much for bringing your project to our committee.

Regards,

Dorene Lorenz, Chair

CITY AND BOROUGH OF JUNEAU
ALASKA'S CAPITAL CITY
COMMUNITY DEVELOPMENT

(907) 586-0715
CDD_Admin@juneau.gov
www.juneau.org/community-development
155 Heritage Way • Juneau, AK 99801

COMMUNITY DEVELOPMENT DEPARTMENT - REQUEST FOR AGENCY COMMENT

DEPARTMENT: CDD – Building Division

STAFF PERSON/TITLE: Jeff Hedges, Building Code Official

DATE: 01/28/2026

APPLICANT: Reuben Willis

TYPE OF APPLICATION: Conditional Use Permit (USE2025 0013), Variance (VAR2025 0008), and Variance (VAR2025 0009)

PROJECT DESCRIPTION:

USE2025 0013: Conditional Use Permit to construct a 38,000-square-foot entertainment and retail building containing three theaters, a retail store, and associated office and support spaces.

VAR2025 0008: Variance to reduce the west side yard setback from 10 feet to 0 feet for a length of 60 feet.

VAR2025 0009: Variance to extend the Waterfront Commercial height limit from 35 feet to 38 feet, and from 35 feet to 54 feet for an area of 5,800 square-feet to accommodate a flying theater.

LEGAL DESCRIPTION: Archipelago Lot 1A

PARCEL NUMBER(S): 1C070K830022

PHYSICAL ADDRESS: 356 S. Franklin St.

SPECIFIC QUESTIONS FROM PLANNER:

N/A

AGENCY COMMENTS:

Since there is a ROW that is greater than 10' wide on the West side yard, the Building Division has no issues with this project.

CITY AND BOROUGH OF JUNEAU
ALASKA'S CAPITAL CITY
COMMUNITY DEVELOPMENT

(907) 586-0715
CDD_Admin@juneau.gov
www.juneau.org/community-development
155 Heritage Way • Juneau, AK 99801

COMMUNITY DEVELOPMENT DEPARTMENT - REQUEST FOR AGENCY COMMENT

DEPARTMENT: Fire

STAFF PERSON/TITLE: Theresa Ross, Fire Marshal

DATE: 01/28/2026

APPLICANT: Reuben Willis

TYPE OF APPLICATION: Conditional Use Permit (USE2025 0013), Variance (VAR2025 0008), and Variance (VAR2025 0009)

PROJECT DESCRIPTION:

USE2025 0013: Conditional Use Permit to construct a 38,000-square-foot entertainment and retail building containing three theaters, a retail store, and associated office and support spaces.

VAR2025 0008: Variance to reduce the west side yard setback from 10 feet to 0 feet for a length of 60 feet.

VAR2025 0009: Variance to extend the Waterfront Commercial height limit from 35 feet to 38 feet, and from 35 feet to 54 feet for an area of 5,800 square-feet to accommodate a flying theater.

LEGAL DESCRIPTION: Archipelago Lot 1A

PARCEL NUMBER(S): 1C070K830022

PHYSICAL ADDRESS: 356 S. Franklin St.

SPECIFIC QUESTIONS FROM PLANNER:

AGENCY COMMENTS:

Placement of the structure must meet 2024 IFC Appendix D, sections D104 & D105 should be addressed early on.

Invitation to Comment

On a proposal to be heard by the CBJ Planning Commission

Your Community, Your Voice

REVISED NOTICE

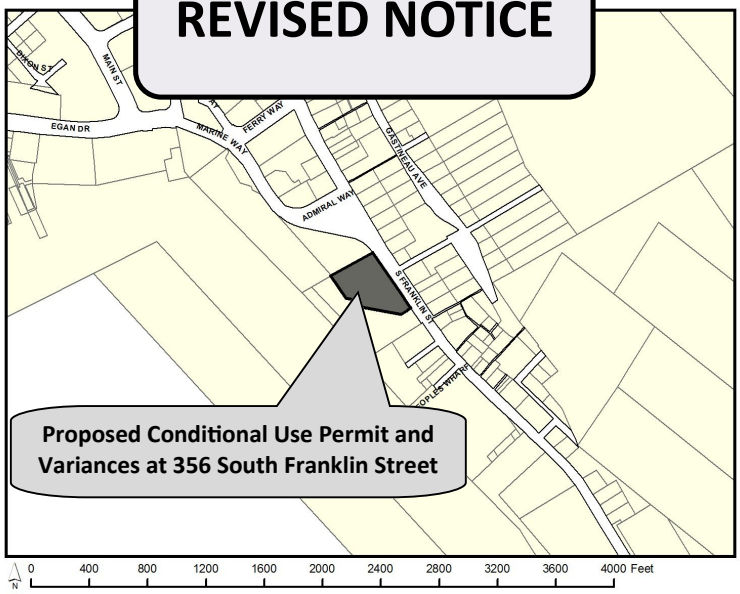

CITY AND BOROUGH OF JUNEAU
ALASKA'S CAPITAL CITY
COMMUNITY DEVELOPMENT
155 Heritage Way Juneau, Alaska 99801

TO

A Conditional Use Permit has been submitted for consideration and public hearing by the Planning Commission to **construct a 38,000-square foot entertainment and retail building** at **356 South Franklin Street** in a **Waterfront Commercial** zone. **THEN:**

Variance to reduce west side yard setback. **- AND -** **Variance** to extend Waterfront Commercial height limit.

PROJECT INFORMATION:
Project Information can be found at:
https://juneau.org/community-development/short-term-projects

PLANNING COMMISSION DOCUMENTS:
Staff Report expected to be posted **Tuesday, February 17, 2026** at
https://juneau.org/community-development/planning-commission
Find hearing results, meeting minutes, and more here, as well.

Now through Feb. 2	Feb. 3— noon, Feb. 20	HEARING DATE & TIME: 6:00 pm, Feb. 24, 2026	Feb. 25
Comments received during this period will be sent to the Planner, **Justin Smith,** to be included as an attachment in the staff report.	Comments received during this period will be sent to Commissioners to read in preparation for the hearing.	This meeting will be held in person and by remote participation. For remote participation: join the Webinar by visiting https://juneau.zoom.us/j/86847221296 and use the Webinar ID: 868 4722 1296 OR join by telephone, calling: 1-253-215-8782 and enter the Webinar ID (above). You may also participate in person in City Hall Assembly Chambers, 155 Heritage Way Juneau, Alaska.	The results of the hearing will be posted online.

FOR DETAILS OR QUESTIONS,

Phone: **(907)586-0753 ext. 4129**
Email: **pc_comments@juneau.gov or Justin.Smith@juneau.gov**
Mail: **Community Development, 155 Heritage Way, Juneau AK 99801**

Printed January 23, 2026

Case No.: USE2025 0013, VAR2025 0008, VAR2025 0009
Parcel No.: 1C070K830022
CBJ Parcel Viewer: http://epv.juneau.org



Attachment L – Public Notice Sign Photo

CITY AND BOROUGH OF JUNEAU
ALASKA'S CAPITAL CITY
COMMUNITY DEVELOPMENT

PLANNING COMMISSION STAFF REPORT
VARIANCE VAR2025 0009
HEARING DATE: FEBRUARY 24, 2026

(907) 586-0715
CDD_Admin@juneau.gov
www.juneau.org/community-development
155 Heritage Way • Juneau, AK 99801

DATE: February 12, 2026

TO: Erik Pedersen, Chair, Planning Commission

BY: Justin Smith, Planner

THROUGH: Jill Lawhorne, Director, AICP

PROPOSAL: Applicant requests a Non-Administrative Variance to extend the Waterfront Commercial height limit from 35 feet to 38 feet, and from 35 feet to 54 feet for an area of 5,800 square-feet to accommodate a flying theater.

STAFF RECOMMENDATION: Approval with conditions

KEY CONSIDERATIONS FOR REVIEW:

- The property is immediately adjacent to a CBJ-owned parking garage that exceeds the surrounding height limit.
- When Historic District boundaries were adopted in 2013, the parking garage parcel was intentionally excluded from the district.
- As a result, adjacent properties that function together visually and physically are subject to different height standards.

GENERAL INFORMATION	
Property Owner	Archipelago Properties LLC
Applicant	Reuben Willis
Property Address	356 S Franklin St
Legal Description	ARCHIPELAGO LT 1A
Parcel Number	1C070K830022
Zoning	WC
Lot Size	33,875 square feet
Water/Sewer	CBJ/CBJ
Access	S. Franklin St.
Existing Land Use	Vacant
Associated Applications	USE2025 0013 and VAR2025 0008

ALTERNATIVE ACTIONS:

1. **Approve:** Approve the permit and adopt new findings for items 1-2 below that support the approval. Approval may require conditions.
2. **Continue:** To a future meeting date if determined that additional information or analysis is needed to make a decision, or if additional testimony is warranted.

ASSEMBLY ACTION REQUIRED:

Assembly action is not required for this permit.

STANDARD OF REVIEW:

- Quasi-judicial decision
- Requires five (5) affirmative votes for approval
- Code Provisions:
  - CBJ 49.20.240
  - CBJ 49.20.250(b)
  - CBJ 49.25.400
  - CBJ 49.80

The Commission shall hear and decide the case per CBJ 49.20.240. *The Planning Commission shall hear all Variance requests except Administrative Variances, and shall either approve, conditionally approve, modify or deny the request based on the criteria in section CBJ 49.20.250(b).*

SITE FEATURES AND ZONING

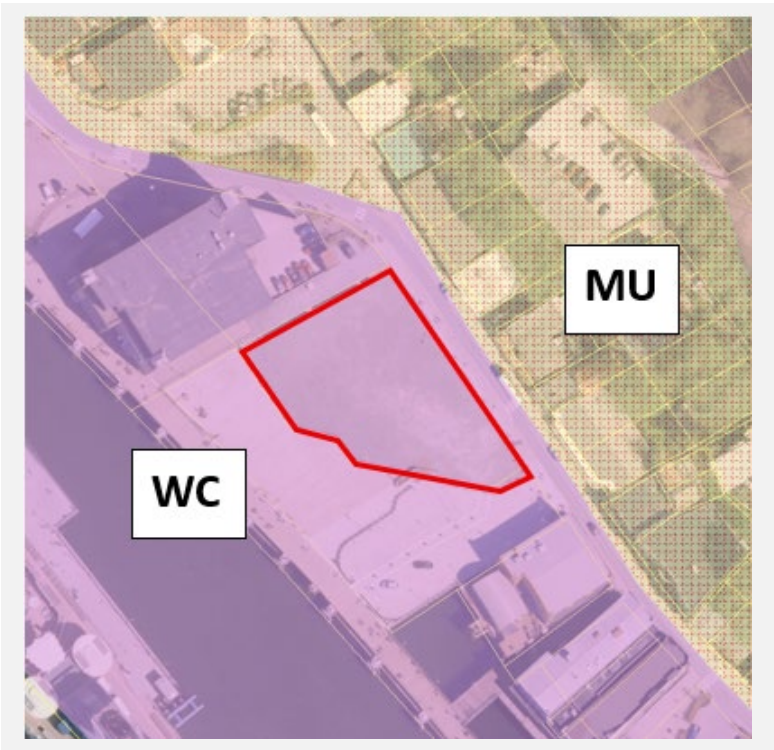

SURROUNDING ZONING AND LAND USES	
North (MU)	Commercial/Mixed Use
South (WC)	Seawalk
East (MU)	Commercial/Mixed Use
West (WC)	Downtown Library and Parking Garage

SITE FEATURES	
Anadromous	No
Flood Zone	Panel 02110C1567E: Zone VE
Hazard	No
Hillside	No
Wetlands	No
Parking District	No Parking Required Area
Historic District	Lot is partially within the Juneau Downtown Historic District
Overlay Districts	Cruise Ship Berthing and Lightering District Overlay

BACKGROUND INFORMATION

Project Description – The applicant requests a Non-Administrative Variance, VAR2025-0009, to extend the Waterfront Commercial height limit from 35 feet to 38 feet, and from 35 feet to 54 feet for an area of 5,800 square-feet to accommodate a flying theater (**Attachment A**). The proposed building is approximately 38,000 square feet and includes a lobby and an open-air plaza on the east side of the lot. The property is adjacent to the downtown library and parking garage, the seawalk, and the city-owned bus staging lot.

The proposed entertainment uses include a 60-person 4D theater, a 72-person flying theater, and three 20-person Ocean 360 rides. A ticket counter is proposed within the lobby to direct visitors throughout the building. A mezzanine level is proposed to accommodate back-of-house uses, including office and storage space.

The first 40 feet of the property lies within the Juneau Downtown Historic District, as shown in **Attachment B**. As a result, review of the proposal includes consideration of the Downtown Historic District Design Standards and Guidelines in the following section. The property is also within the No Parking Required Area (**Attachment H**).

The applicant has also requested a Conditional Use Permit, USE2025-0013, and another Variance, VAR2025-0008. USE2025-0013 is a request to construct a new entertainment and retail building containing three theater attractions, a retail space, and associated office and support areas. VAR2025-0008 is a request to reduce the west side yard setback from 10 feet to 0 feet for a length of 60 feet in a Waterfront Commercial zone. The Director recommends approval of the conditional use permit and the other variance.

Background – The property is the former site of the Juneau Cold Storage building, which was destroyed by fire in the 1980s. Since that time, the property has remained largely vacant, with intermittent use for seasonal food and retail operations.

The current lot, Archipelago Lot 1A, was approved in May 2019 as Plat 2019-19 (**Attachment C**). A Conditional Use Permit, USE2019-0021, application for two (2) two-story commercial mixed-use buildings was approved by the Planning Commission on January 21, 2020 (**Attachment D**). A subsequent variance request, VAR2019-0005, to reduce the parking requirement to zero in association with USE2019-0021 was denied by the Board of Adjustment following hearings on January 28, 2020, and February 4, 2020 (**Attachment E**).

BLD2019-0145 was a grading permit issued on April 12, 2019, for site improvements (**Attachment F**). The permit was issued but was never finaled.

BLD2019-0321, titled Downtown Waterfront Improvements – Phase 1, was issued on July 12, 2019, and was managed by CBJ Docks and Harbors. The work included improvements in the surrounding area, including portions of the applicant's lot (**Attachment G**). This permit was also issued but never finaled.

The table below summarizes relevant history for the lot and proposed development.

Date	Item	Summary
2013	Juneau Downtown Historic District Map	Adopted in 2013, this map shows the Juneau Downtown Historic District. This district is subject to the Downtown Historic District Design Standards and Guidelines. (**Attachment B**)
2019	Plat 2019-19	The plat of the applicant's lot, Archipelago Lot 1A. (**Attachment C**)
2019	USE2019 0021	A conditional use permit for two (2) two-story commercial mixed-use buildings on Archipelago Lot 1A. The conditional use permit was approved by the Planning Commission on January 21, 2020. (**Attachment D**)
2019	VAR2019 0005	A variance connected to USE2019-0021 to reduce the parking requirement to zero. The variance was denied by the Board of Adjustment following hearings on January 28, 2020, and February 4, 2020. (**Attachment E**)
2019	BLD2019-0145	A grading permit issued on April 12, 2019, for site improvements. The permit was issued but never finaled. (**Attachment F**)
2019	BLD2019-0321	A building permit for Downtown Waterfront Improvements – Phase 1 issued on July 12, 2019. The project was managed by CBJ Docks and Harbors and included work in the surrounding area of Archipelago Lot 1A. (**Attachment G**)
2022	No Parking Required Area Map	Adopted in 2022, this map shows the Town Center Parking Area and the No Parking Required Area. Archipelago Lot 1A is within the No Parking Required Area. (**Attachment H**)
2026	HRAC Recommendation Letter	The Historic Resources Advisory Committee (HRAC) met on February 4, 2026, to discuss the proposed project. The committee voted unanimously to recommend approval for this project. (**Attachment I**)

ANALYSIS

Project Site – The Waterfront Commercial zone is limited to a height of 35 feet. The first 40 feet of the property lies within the Juneau Downtown Historic District and is subject to the Downtown Historic District Design Standards and Guidelines, which has a height limit of 38 feet.

Height Requirements – The applicant requests a Non-Administrative Variance to extend the Waterfront Commercial height limit from 35 feet to 38 feet to match the Juneau Downtown Historic District height limit, and from 35 feet to 54 feet for an area of 5,800 square-feet to accommodate a theater.

Standard		Requirement	Existing	Requested	Code Reference
Height	Waterfront Commercial district	35 feet	Vacant	38 feet	CBJ 49.25.400
	5,800 square-feet flying theater within Waterfront Commercial District	35 feet	Vacant	54 feet	CBJ 49.25.400

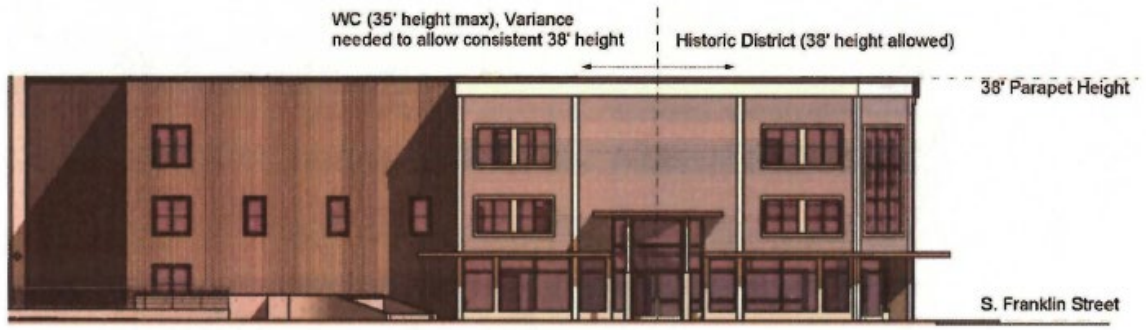

Image 2: East Elevation, showing 38' Height Variance

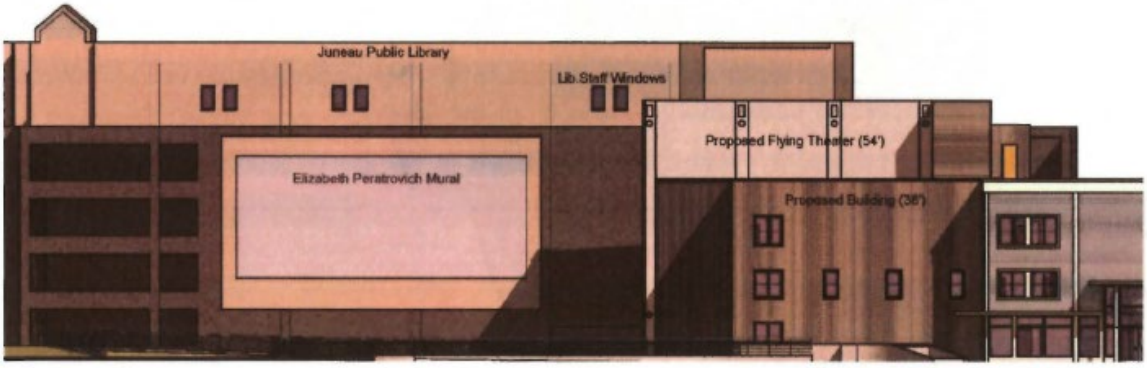

Image 3: East Elevation showing proposed building in relation to Library for Theater 54' Height Variance

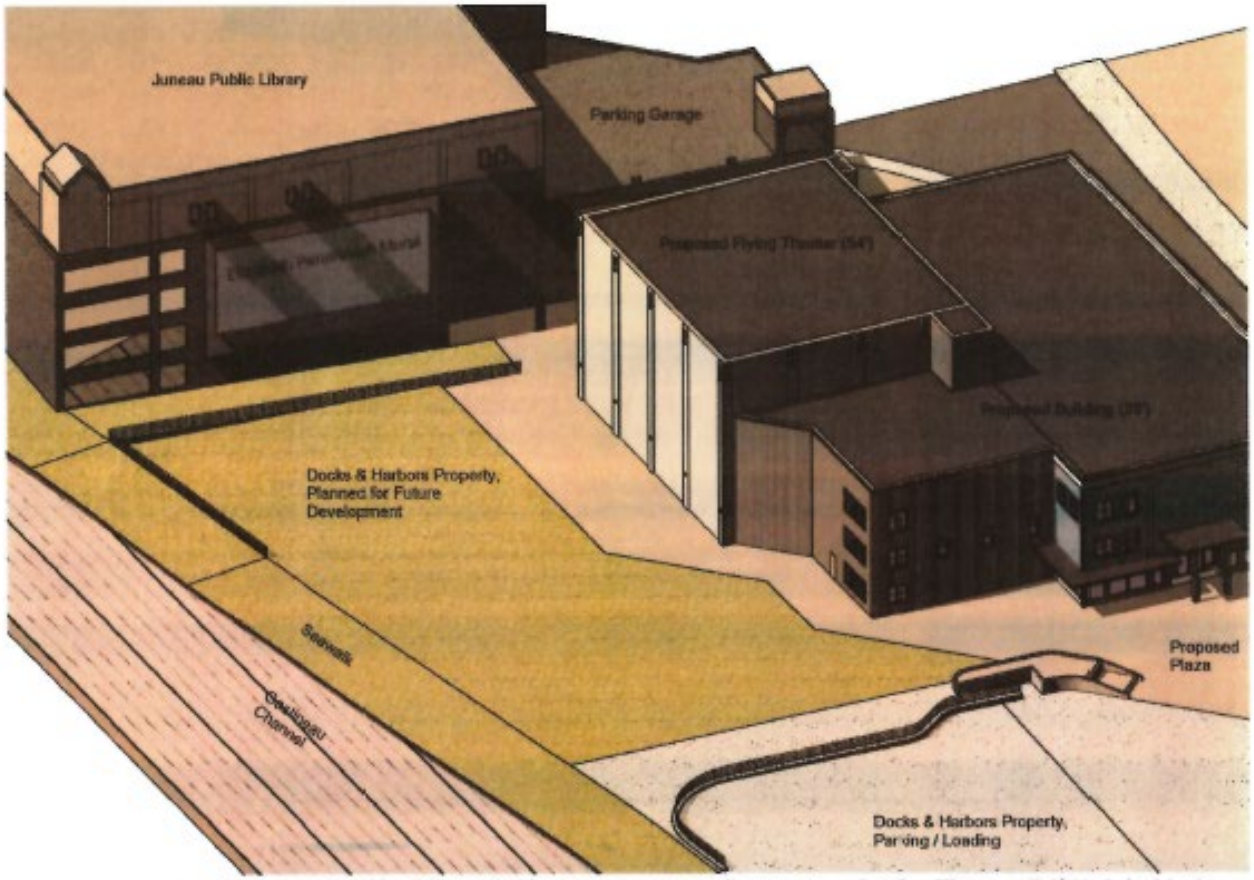

Image 4: View showing proposed building in relation to surrounding properties for Theater 54' Height Variance



Image 5: Flying Theater Ride with 49' tall Screen for Theater 54' Height Variance

VARIANCE STANDARDS

Pursuant to CBJ 49.20.200, a Non-Administrative Variance may be granted to provide an applicant relief from the requirements of this Title 49, the Land Use Code. A Variance is prohibited from varying any requirement or regulation of Title 49 concerning the use of land or structures, housing density, lot area, requirements in CBJ Chapter 49.35 (Public and Private Improvements), or requirements in CBJ Chapter 49.65 (Specified Use Provisions).

Per CBJ 49.20.250(b), a Non-Administrative Variance may be granted to provide an applicant relief from requirements of this title after the prescribed hearing and after the Planning Commission has determined that:

A. Enforcement of the ordinance would create an undue hardship resulting from the unusual or special conditions of the property.

Analysis: The property is vacant and located immediately adjacent to a CBJ-owned parking garage that exceeds the standard height limit applicable to the surrounding area. When the historic district boundaries were adopted in 2013, the parking garage parcel was intentionally excluded from the historic district. As a result of this boundary decision, two adjacent properties that function together visually and physically are subject to different height standards.

Finding: Yes. This criterion has been met.

B. The unusual or special conditions of the property are not caused by the person seeking the Variance.

Analysis: The applicant did not create the regulatory circumstances that result in the need for the variance. The exclusion of the adjacent parking garage from the historic district was a City action. The requested variance is necessary to allow reasonable use of the property and are not the result of an inappropriate use selection or intentional overbuilding.

Finding: Yes. This criterion has been met.

C. The grant of the Variance is not detrimental to public health, safety, or welfare.

Analysis: The project supports City goals of keeping tourist activities within the downtown area, reducing pressure on residential neighborhoods. The site contains no historic resources, and the project does not involve demolition or alteration of historic structures. The facility provides a weather-independent attraction that encourages visitors to remain downtown longer.

The Elizabeth Peratrovich mural on the adjacent parking garage is a significant cultural and public art feature. Development on the subject property has the potential to affect views of the mural if not carefully addressed. Conditions of approval can mitigate potential visual impacts.

Finding: **Yes.** This criterion has been met.

D. The grant of the Variance is narrowly tailored to relieve the hardship.

Analysis: The requested building height is driven by the functional requirements of theater spaces, including interior clearances and safety needs, rather than a desire to maximize building size. No additional variances

beyond height and setback are requested, and the project remains subject to all other applicable development standards.

Finding: **Yes.** This criterion has been met.

Pursuant to CBJ 49.20.260, the Planning Commission may attach to a Non-Administrative Variance conditions regarding the location, character, and other features of the proposed structures or uses as it finds necessary to carry out the intent of this title and to protect the public interest.

Condition: The building shall be designed and located to preserve public views of the Elizabeth Peratrovich mural on the adjacent parking garage, as demonstrated through submitted elevations and sightline analysis.

Condition: Building height shall not exceed the maximum heights shown on the plans submitted with the variance application. The approved maximum height is 38 feet for the site overall, with a maximum height of 54 feet limited to a 5,800-square-foot portion of the development.

AGENCY REVIEW

CDD conducted an agency review comment period between January 28, 2026, and February 20, 2026, and received the following responses, which are included in **Attachment J**.

Agency	Summary
CBJ Docks and Harbors	No comments received.
Capital City Fire & Rescue	Placement of the structure must meet 2024 IFC Appendix D, sections D104 & D105 should be addressed early on.
CDD – Building Division	Since there is a ROW that is greater than 10’ wide on the West side yard, the Building Division has no issues with this project.
CBJ Engineering & Public Works	No comments received.
CBJ Parks & Recreation	No comments received.

PUBLIC COMMENTS

Public notice was mailed to property owners within 500 feet of the lot (**Attachment K**), a public notice sign was posted on-site two weeks prior to the hearing (**Attachment L**), and ads were placed in the Juneau Empire. Public comments received at time of writing this staff report and are summarized below.

Name	Summary
Gregory Adler	Sounds like a great idea for Juneau.

FINDINGS

1. ***Is the application for the requested Variance complete?***

   Analysis: No additional analysis required.

   Finding: Yes. The application for the requested Variance is complete.

2. ***Does the Variance as requested meet the criteria of CBJ Section 49.20.250(b)(1), Non-Administrative***

Variances?

Analysis: As discussed above, all criteria are met.

Finding: Yes. The requested Variance with conditions meets all of the criteria of CBJ Section 49.20.250(b)(1), Non-Administrative Variances.

STAFF RECOMMENDATION

Staff recommends that the Planning Commission adopt the Director's analysis and findings and grant the requested Non-Administrative Variance. The Non-Administrative Variance would allow an increase in the Waterfront Commercial height limit from 35 feet to 38 feet, and from 35 feet to 54 feet for an area of 5,800 square-feet to accommodate a flying theater.

The approval is subject to the following conditions:

1. The building shall be designed and located to preserve public views of the Elizabeth Peratrovich mural on the adjacent parking garage, as demonstrated through submitted elevations and sightline analysis.
2. Building height shall not exceed the maximum heights shown on the plans submitted with the variance application. The approved maximum height is 38 feet for the site overall, with a maximum height of 54 feet limited to a 5,800-square-foot portion of the development.

STAFF REPORT ATTACHMENTS

Item	Description
Attachment A	Application Packet
Attachment B	Juneau Downtown Historic District Map
Attachment C	Plat 2019-19
Attachment D	USE2019 0021
Attachment E	VAR2019 0005
Attachment F	BLD2019-0145
Attachment G	BLD2019-0321
Attachment H	No Parking Required Area Map
Attachment I	HRAC Recommendation Letter
Attachment J	Agency Comments
Attachment K	Abutters Notice
Attachment L	Public Notice Sign Photo

HEIGHT VARIANCE

CITY AND BOROUGH OF JUNEAU
ALASKA'S CAPITAL CITY

DEVELOPMENT PERMIT APPLICATION

NOTE: Development Permit Application forms must accompany all other Community Development Department land use applications. This form and all documents associated with it are public record once submitted.

To be completed by Applicant

PROPERTY LOCATION

Physical Address
356 S. Franklin Street, Juneau, Alaska

Legal Description(s) (Subdivision, Survey, Block, Tract, Lot)
Archipelago Lot 1A

Parcel Number(s)
1C070-K83-0022

[X] This property is located in the downtown historic district
[ ] This property is located in a mapped hazard area, if so, which _____

LANDOWNER

Property Owner
Archipelago Properties, LLC

Contact Person
Erica Simpson

Mailing Address
725 Broad St - Augusta, GA 30901

Phone Number(s)
907.765.7601
925.878.9424

E-mail Address

LANDOWNER CONSENT

Required for Planning Permits, not needed on Building/ Engineering Permits.
Consent is required of all landowners. If submitted with the application, alternative written approval may be sufficient. Written approval must include the property location, landowner's printed name, signature, and the applicant's name.

I am (we are) the owner(s) of the property subject to this application and I (we) consent as follows:
A. This application for a land use or activity review for development on my (our) property is made with my complete understanding and permission.
B. I (we) grant permission for the City and Borough of Juneau officials/employees to inspect my property as needed for purposes of this application.

Archipelago Properties, LLC
Craig S. Mitchell — President
Landowner (Printed Name) — Title (e.g.: Landowner)

X _____ 8/18/2025
Landowner (Signature) — Date

_____
Landowner (Printed Name) — Title (e.g.: Landowner)

X _____ _____
Landowner (Signature) — Date

NOTICE: The City and Borough of Juneau staff may need access to the subject property during regular business hours. We will make every effort to contact you in advance, but may need to access the property in your absence and in accordance with the consent above. Also, members of the Planning Commission may visit the property before a scheduled public hearing date.

APPLICANT

If same as LANDOWNER, write "SAME"

Applicant (Printed Name)
Reuben Willis (signed sales agreement for lot, in due diligence period)

Contact Person

Mailing Address
2908 Jackson Road, Juneau, Alaska 99801

Phone Number(s)
907.723.5771

E-mail Address
reubenwillis@gmail.com, willis@gci.net

X _____ 8/18/25
Applicant's Signature — Date of Application

---DEPARTMENT USE ONLY BELOW THIS LINE---

Intake Initials 12/15/25

INCOMPLETE APPLICATIONS WILL NOT BE ACCEPTED

For assistance filling out this form, contact the Permit Center at 586-0770.

Case Number	Date Received
VAR25-009	12/15/25

I:\FORMS\PLANFORM\DPA_Final Draft.docx

Updated 8/2025– Page 1 of 1

CITY AND BOROUGH OF JUNEAU
COMMUNITY DEVELOPMENT

VARIANCE APPLICATION

See reverse side for more information regarding the permitting process and the materials required for a complete application.

NOTE: Must be accompanied by a DEVELOPMENT PERMIT APPLICATION form.
Not to be used for Administrative Variances

To be completed by Applicant

PROJECT SUMMARY

A new entertainment and retail building. See attached narrative and CUP application for additional information.

HEIGHT

VARIANCE REQUESTED (list CBJ Code section you are requesting a variance to)
See attached narrative.

Previous Variance Applications? YES X NO Date of Filing: _____

Previous Case Number(s): _____ Building Permit related to this variance? YES NO

Was the Variance Granted? YES NO

UTILITIES AVAILABLE: **WATER** X Public On Site **SEWER:** X Public On Site

ALL REQUIRED MATERIALS ATTACHED

Complete application per CBJ 49.65.210

Narrative including:

Any characteristics of land or building(s) or extraordinary situations that are unusual to this property or structure

Why a variance would be needed for this property regardless of the owner

What hardship would result if the variance is not granted

Site Plan

----------**DEPARTMENT USE ONLY BELOW THIS LINE**----------

VARIANCE FEES	Fees	Check No.	Receipt	Date
Application Fees	$ 400.00			
Adjustment	$ 150.00	$50 PUBLIC NOTICE SIGN, $100 DEPOSIT		
Total Fee	$ 550.00			

PAC25-50

This form and all documents associated with it are public record once submitted.

INCOMPLETE APPLICATIONS WILL NOT BE ACCEPTED

For assistance filling out this form, contact the Permit Center at 586-0770.

Case Number	Date Received
VAR 25-009	12/15/25

Variance Application Instructions

Variances are outlined in CBJ 49.20 article II

Application: An application for a Variance will not be accepted by the Community Development Department (CDD) until it is determined to be complete. The items needed for a complete application are:

1. **Forms:** Completed Variance Application and Development Permit Application forms.
2. **Fees:** The fee for a Variance Application is $400.00. If the application is in conjunction with a major development permit, the Variance fee will be reduced by 20 percent. Any development, work or use done without a permit issued will be subject to double fees. All fees are subject to change.
3. **Project Description:** A detailed letter or narrative describing the hardship that is the result of an unusual situation or physical feature affecting a specific parcel of land or structure. **Also include how the proposed project meets the variance criteria listed on the attached sheet.**
4. **Plans:** A site plan showing the following information:
    A. The location of existing and proposed structures (i.e. buildings, fences, signs, parking areas, etc.); and
    B. The location of existing physical features of the site (i.e. drainage, eagle trees, hazard areas, salmon streams, wetlands, etc.).

Document Format: All materials submitted as part of an application shall be submitted in either of the following formats:

1. Electronic copies in the following formats: .doc, .txt, .xls, .bmp, .pdf, .jpg, .gif, .xlm, .rtf (other formats may be preapproved by the Community Development Department).
2. Paper copies 11" X 17" or smaller (larger paper size may be preapproved by the Community Development Department).

Please consult with the Community Development Department to discuss whether additional information may be required for your application. The "Planner-On-Call" can be reached by contacting the Community Development Department at (907) 586-0715 or via email at Permits@juneau.org.

Application Review & Hearing Procedure: Once the application is determined to be complete, the Community Development Department will initiate the review and scheduling of the application. This process includes:

Review: As part of the review process the Community Development Department will evaluate the application for consistency with all applicable City & Borough of Juneau codes and adopted plans. Depending on unique characteristics of the Variance Application request the application may be required to be reviewed by other municipal boards and committees. During this review period, the Community Development Department will coordinate the review of this application by other agencies, as necessary. Review comments may require the applicant to provide additional information, clarification, or submit modifications/alterations for the proposed project.

Hearing: All Variance Applications must be reviewed by the Board of Adjustment. Once an application has been deemed complete and has been reviewed by all applicable parties the Community Development Department will schedule the requested permit for the next appropriate meeting.

Public Notice Responsibilities: As part of the Variance process, all requests must be given proper public notice as outlined in 49.20.230 which consists of the following:

Community Development Department will give notice of the pending Planning Commission meeting and its agenda in the local newspaper a minimum of 10-days prior to the meeting. Furthermore, the department will mail abutters notices to all property owners within 500-feet of the project site. A "Public Notice Sign" is required to be posted on the site by the Applicant and the Community Development Department will create the sign to be posted.

Variance Approval Criteria

A variance may be granted after the prescribed hearing and after the Board of Adjustment has determined that the following criteria are met. Include in your project narrative a detailed description about how your proposal meets each of the criteria listed below:

CBJ 49.20.250(b) Non-administrative variances. *(1)A variance may be granted to provide an applicant relief from requirements of this title after the prescribed hearing and after the board of adjustment has determined that:*

(A) Enforcement of the ordinance would create an undue hardship resulting from the unusual or special conditions of the property;

(B) The unusual or special conditions of the property are not caused by the person seeking the variance;

(C) The grant of the variance is not detrimental to public health, safety, or welfare; and

(D) The grant of the variance is narrowly tailored to relieve the hardship.

PLEASE NOTE: As provided by CBJ Land Use code section on Variances (CBJ 49.20.200), a variance may be granted to provide an applicant relief from the requirements of Title 49, the Land Use Code. A variance is prohibited from varying any requirement or regulation of this title concerning the use of land or structures, housing density, lot area, requirements in chapter 49.35, or requirements in chapter 49.65. Applications for prohibited variances shall not be accepted for filing or shall be rejected by the director.

INCOMPLETE APPLICATIONS WILL NOT BE ACCEPTED

Jensen Yorba Wall Inc.
522 West 10th Street, Juneau, Alaska 99801 907.586.1070 jensenyorbawall.com
Designing Community Since 1935

Date: December 9, 2025
Re: Alaska Fly & Dive (JYW No. 25031)
Conditional Use Permit Application Variance Narrative

In order to be successful, this large and complicated project requires a few variances to the zoning dimensional standards. First, several setback variances are requested because the lot is within both the Waterfront Commercial property zoning as well as the Historic District Overlay Zone and there are some conflicts between the requirements of each zone. Second, some height restriction variances are requested to make the project economically viable.

Setback Variances. The WC zone requires 10' setbacks from all property lines (Table 49.25.400), while the Historic District Design Guidelines (04 CBJAC 080.460) require locating the front street wall at the sidewalk where feasible (7.1) and street facades to span lot widths (7.2) with an exception for access ways to side or rear entrances.

- *North (South Franklin Street) & West (Library) sides*. Building is located as near as possible to NW property corner. This will create a street wall along the 13' +/- wide South Franklin sidewalk, which seems to be the primary goal of the HDDG. It will also narrow the entrance to the "alley" between the building and the Library where there are no entrances or services. Because of compliance with the HDDG standards, outside of the HDDG zone, the building is closer than allowed to the west property line. ***West Side Variance required***: reduction of the west side WC side yard setback from 10' to 0' for a length of 60'.
- *East side*. Building is set back from the east property line by approximately 83'. This is because the building is not large enough to fill the entire 243' length of the lot and because of the desire to create a public Plaza. The Plaza was part of the original vision for the 2020 joint project with Docks and Harbors and was intended to serve as a link from the deckover to the crosswalk across South Franklin. It also allows gathering space for visitors in an emergency off of the narrow South Franklin Street sidewalks. ***East Side Variance required***: relaxation of the HDDG requirement for the building to span the lot width to allow for the public Plaza.
- *Justifications:*
    - Unusual characteristics contributing to variance need:
        - Two conflicting setback requirements in a single lot is unusual.
        - The public nature of both the South Franklin street wall and the east side Plaza is also very unusual.
        - The odd shape of the lot, particularly the narrow width on the east end, makes a full build-out of the lot problematic.
    - Variance needed regardless of owner: Any owner would need to deal with the conflicts between zoning districts and the need for some sort of public circulation area on the east side.
    - Hardship if variance not granted:

- Pushing the building east out of the west side WC setback would increase the width of the undesirable alley between the Library and the building and decrease the width of the east side Plaza, which is desired by both CBJ and the owner. It also will widen the street wall gap along the South Franklin side of the Library.
- Decreasing the size of the Plaza will limit future opportunities to offer open air food service here, decreasing the economic viability of the project.
- Requiring the building to be built to fill out the full 243' length of the property would greatly enlarge the size and cost of the project.

o The grant of the variances is not detrimental to public health, safety, or welfare:
- The decrease of the setback along the west doesn't impact public safety because of the access and utility easement along this property line allows access in this location.
- Granting of the easements allows for more public safety and welfare in the Plaza to the east.

o The grant of the variances is narrowly tailored to relieve the hardship: Both variance requests are limited to the specific property lines / building elevations where the variance is required.

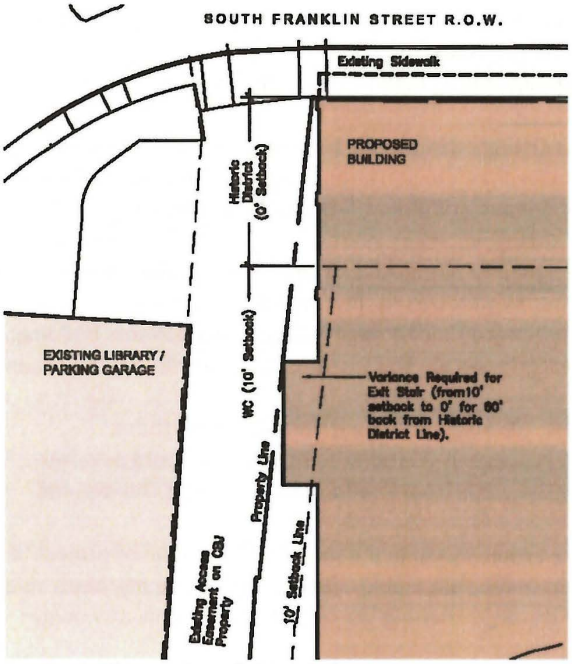

Image 1: Illustration of West Side Variance

Height Variances. The Historic District allows for a building height of 38', while the WC zone limits the height to 35'.

- *38' Height*. Building is 38' tall, typical, which allows for the stacking of the Ocean 360 rides on the 2nd Floor over the 4D Theater on the 1st floor with just inches to spare. ***Variance required***: raise the 35' height restriction in the WC zone to 38' for the entire lot, matching the Historic District height.
- *54' Height*. The large Flying Theater ride requires a screen height of just over 49'. Minimal structure for the long spans of the theater space requires a total height for this area of 54'. ***Variance required***:

raise the 35' height restriction in the WC zone to 54' for the approximately 5,800 sf Flying Theater and adjacent stairs, elevator, and mechanical equipment / enclosures.

- *Justifications:*
  - Unusual characteristics contributing to variance need (for 38' tall height variance):
    - Maximizing rides within the building requires stacking of the smaller 4D Theater under the Ocean 360 submarine rides. Even after lowering the floor of the 4D Theater 5' below the 1st Floor, a 38' height is still required to fit rides on both levels.
    - Two conflicting height requirements in a single lot is unusual.
    - The building is already allowed to be 38' tall along the historically-important South Franklin Street side.
    - Keeping the parapet height at a consistent 38' will be visually appealing along the public street and Plaza sides of the building.
  - Unusual characteristics contributing to variance need (for 54' tall height variance):
    - The flagship attraction for the planned new facility is the Flying Theater—a ride where visitors are swung out on seats that move along with a video on a large screen simulating flight over Alaskan landscapes. The ride depends on a tall curving screen to fullly immerse riders in the experience. The screen alone is over 49' tall, requiring at lease a 54' total building height to the roof above.
    - From eye-level a 38' tall building along South Franklin Street blocks the 54' height spaces entirely.
    - The building is located next to an existing building which is much taller. The top of the flat roof of the Library is 66', 12' taller than the maximum height we are requesting. The peaked corners of the Library are and additional 7'-6 and 11'-6" higher than the flat Library roof.
    - The Theater spaces have been designed to not block any views to the Elizabeth Peratrovich mural on the Library or any windows in the Library.
    - The original use of the site was the Juneau Cold Storage—a large, windowless building. The design of the Flying Theater exterior recalls this historic building with tile details on regular vertical pilasters.
    - The site is not waterfront property. Although nothing is currently built there, eventually the Docks and Harbors property is intended to house a museum or other public building that would occupy the waterfront frontage between the Theater and the Seawalk / waterfront.
  - Variance needed regardless of owner: Any owner would need an exceptional type of project to make development of this expensive site economically viable. Obviously, no one has been able to figure out how to make this work in 3+ decades. Raising the height would allow any owner greater flexibility to develop a successful project in this location.
  - Hardship if variance not granted:
    - Decreasing the screen heights in any of the Theater spaces will greatly impact on the economic rationale for the project.
    - The floor of the 4D Theater has already been lowered 5' below the main 1st Floor. Lowering any of the spaces further will move the building into conflict with the FEMA requirements and/or require every expensive waterproofing and other issues.
    - All projecting statues, signage, etc above the parapet level have already been eliminated. The structure between the floors and at the roof has been thinned beyond what is typical and normally economical. Parapet heights have been reduced as far as possible. Any further reduction in the height of the building is not possible without serious impacts to or elimination of Theater spaces.

- The grant of the variance is not detrimental to public health, safety, or welfare:
  - The increase to 38' or 54' building heights will not be visible to pedestrians on South Franklin Street, nor will it block sunlight to the street since the 38' height is already allowed along this property line.
  - The 54' Theater height will not block light or any water views for any windows in the staff or public areas of the Library.
  - The 54' tall Theater will not block sunlight to the Peratrovich Plaza, which located to the south and towards the water.
  - Public safety for building occupants is not impacted by the increase in height, since the building will need to comply with all building codes.
- The grant of the variance is narrowly tailored to relieve the hardship: Both variance requests are limited to the specific rooms and building elements where the variance is required.

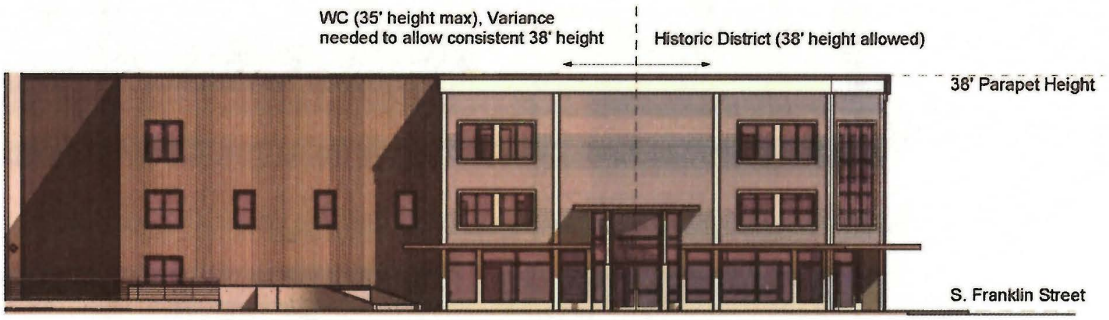

Image 2: East Elevation, showing 38' Height Variance

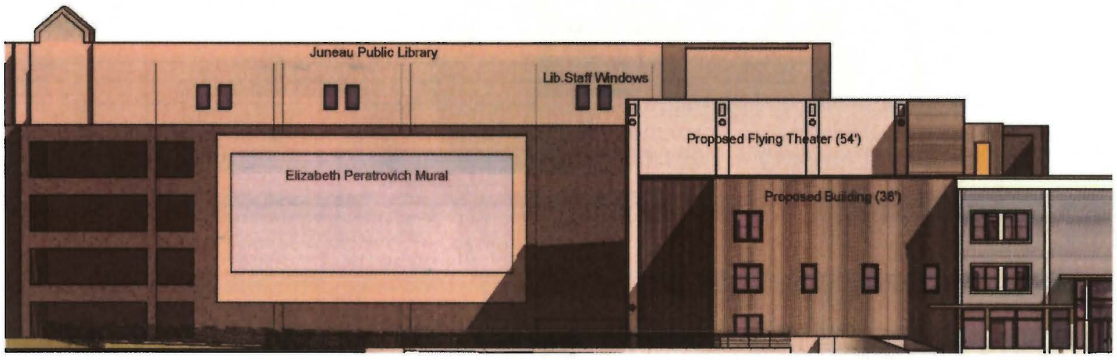

Image 3: East Elevation showing proposed building in relation to Library for Theater 54' Height Variance

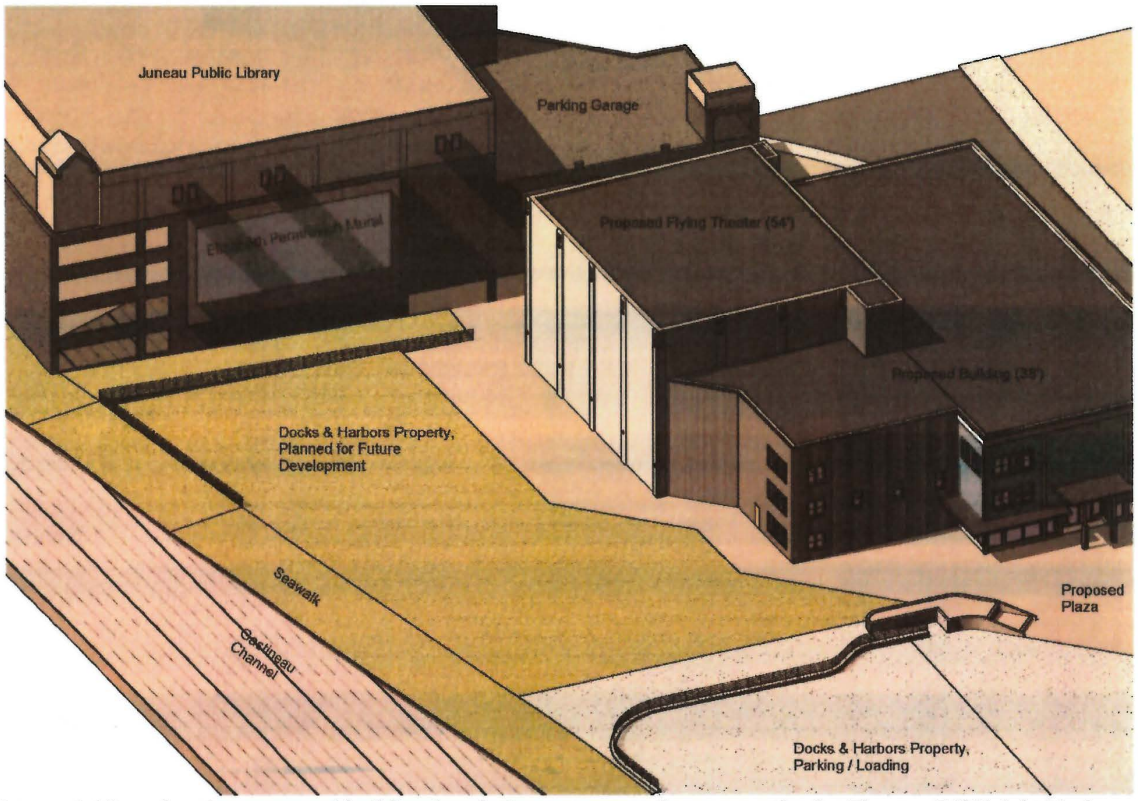

Image 4: View showing proposed building in relation to surrounding properties for Theater 54' Height Variance

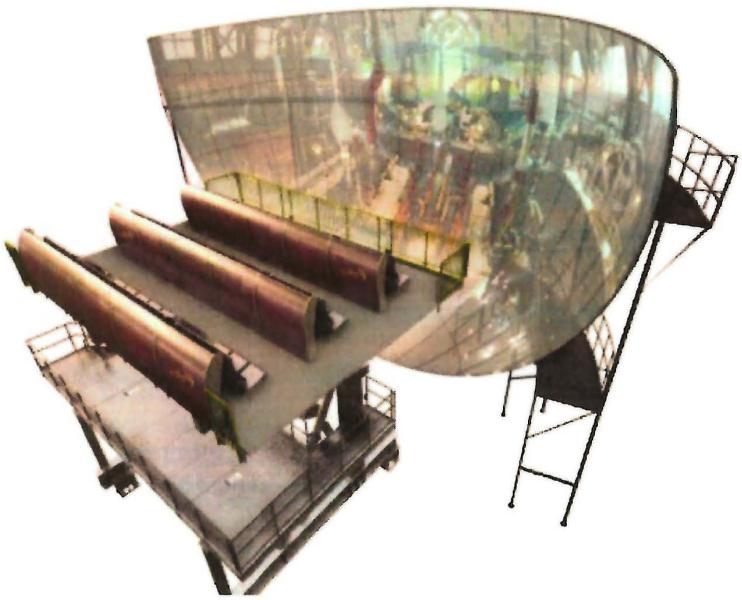

Image 5: Flying Theater Ride with 49' tall Screen for Theater 54' Height Variance



Alaska State Library - Historical Collections

Image 6: Historic Photo of Juneau Cold Storage in location of proposed building

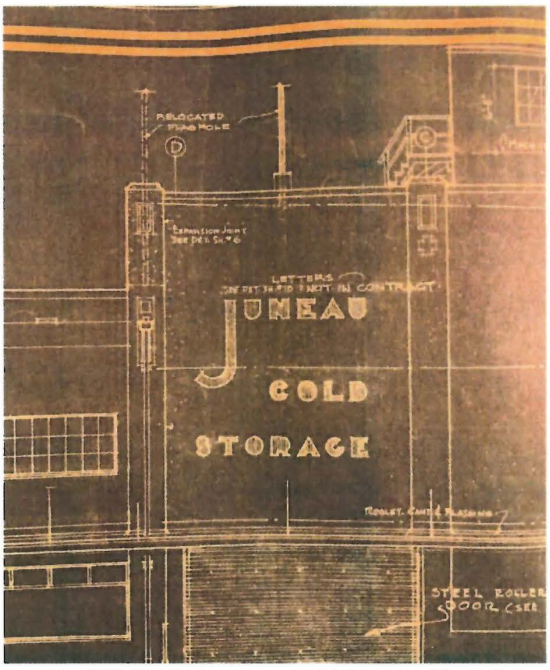

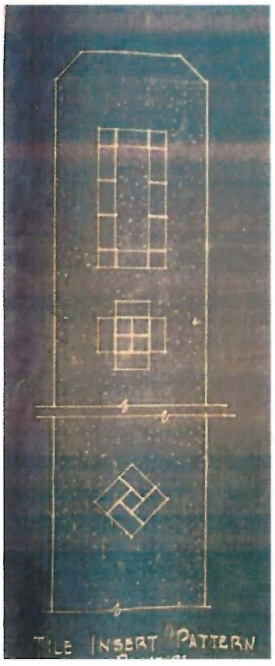

Images 7 & 8: 1944 Juneau Cold Storage blueprints used to develop details of proposed building

JUNEAU DOWNTOWN HISTORIC DISTRICT

Ordinance 2013-01

Adopted January 28th, 2013

NOTE:
The Historic District Boundary includes the street but not the building facades unless the boundary is shown inside the property line.

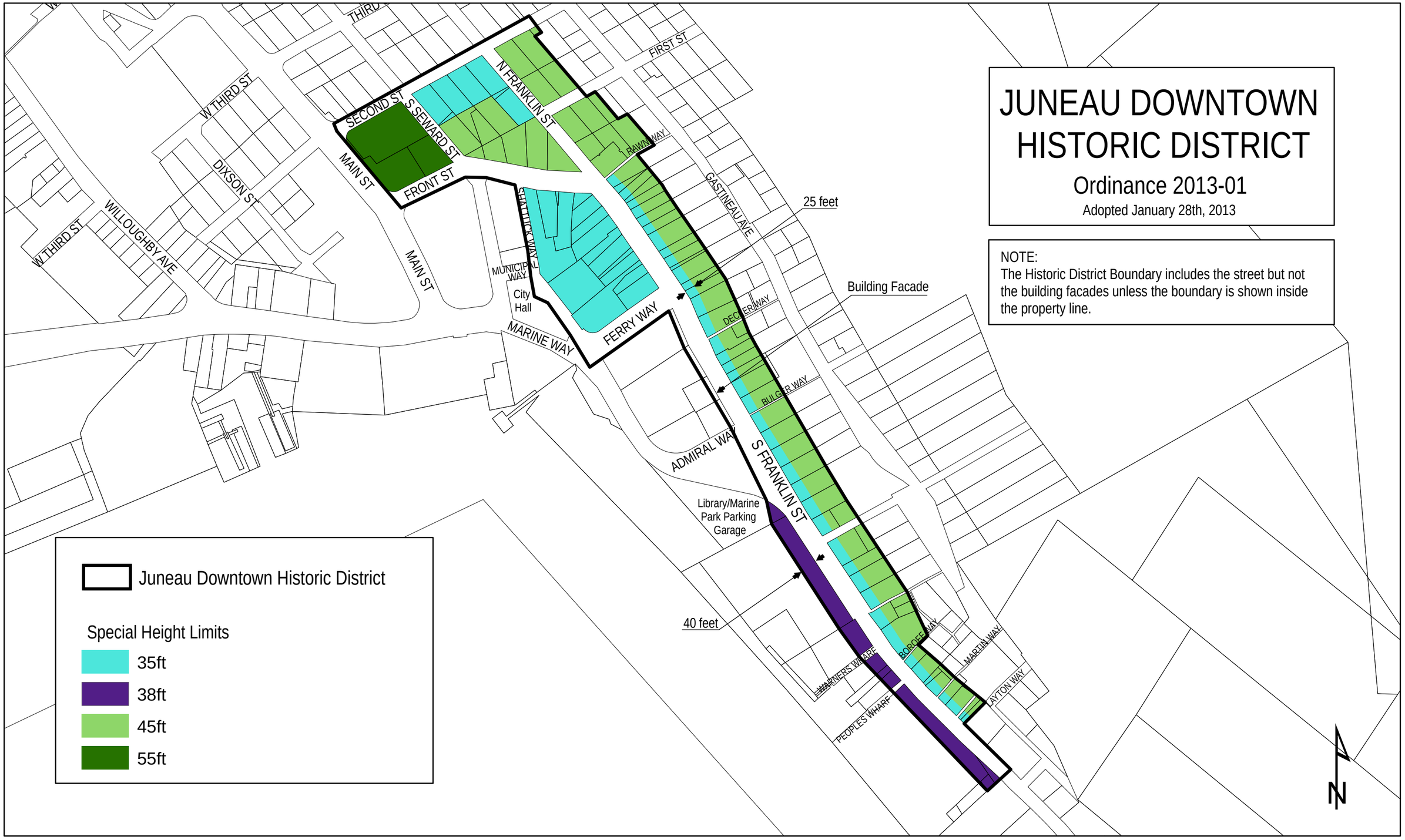

Project Source: F :\gis_work\Quinn\Projects\CDD\historic boundary adjustment.mxd

Attachment B – Juneau Downtown Historic District Map

OWNERSHIP CERTIFICATE

ARCHIPELAGO PROPERTIES, LLC HEREBY CERTIFY THAT THE CORPORATION IS THE OWNER OF LOTS 1 AND 2 AS SHOWN AND DESCRIBED HEREON AND THAT THE CORPORATION HEREBY ADOPTS THIS PLAT OF SUBDIVISION WITH FREE CONSENT, AND DEDICATES ALL STREETS, ALLEYS, WALKS, PARKS AND OTHER OPEN SPACE TO PUBLIC OR PRIVATE USE AS NOTED.

DATE 5-20-2019

BY _____

CRAIG MITCHELL
SENIOR VICE PRESIDENT
SHIVERS LENDING, LLC, SOLE MEMBER
ARCHIPELAGO PROPERTIES, LLC

NOTARY ACKNOWLEDGEMENT

STATE OF GEORGIA)
)S.S.
COUNTY OF Richmond)

THIS IS CERTIFY THAT ON THIS 20th DAY OF May 2019 BEFORE ME THE UNDERSIGNED, A NOTARY PUBLIC IN AND FOR THE STATE OF GEORGIA, DULY COMMISSIONED AND SWORN, PERSONALLY APPEARED Craig S. Mitchell TO ME KNOWN TO BE THE PERSON DESCRIBED IN AND WHO EXECUTED THE ABOVE AND FOREGOING INSTRUMENT, AND ACKNOWLEDGED TO ME THAT HE/SHE SIGNED AND SEALED THE SAME FREELY AND VOLUNTARILY FOR THE USES AND PURPOSES THEREIN MENTIONED, BEING FULLY AUTHORIZED TO DO SO. WITNESS MY HAND AND OFFICIAL SEAL THE DAY AND YEAR THIS CERTIFICATE FIRST ABOVE WRITTEN.

NOTARY PUBLIC FOR GEORGIA _____

MY COMMISSION EXPIRES 11-13-2020

Notary Public, Richmond County, Georgia, My Commission Expires November 13, 2020

OWNERSHIP CERTIFICATE

THE CITY AND BOROUGH OF JUNEAU, ALASKA (CBJ) HEREBY CERTIFY THAT CBJ IS THE OWNER OF LOTS 3 AND 4 AS SHOWN AND DESCRIBED HEREON AND THAT CBJ HEREBY ADOPTS THIS PLAT OF SUBDIVISION WITH FREE CONSENT, AND DEDICATES ALL STREETS, ALLEYS, WALKS, PARKS, AND OTHER OPEN SPACES TO PUBLIC OR PRIVATE USE AS NOTED.

DATE May 23 2019

BY _____

GREGORY CHANEY
LANDS AND RESOURCES MANAGER
CITY AND BOROUGH OF JUNEAU

NOTARY ACKNOWLEDGEMENT

STATE OF ALASKA)
)S.S.
FIRST JUDICIAL DISTRICT)

THIS IS CERTIFY THAT ON THIS 23rd DAY OF May 2019 BEFORE ME THE UNDERSIGNED, A NOTARY PUBLIC IN AND FOR THE STATE OF ALASKA, DULY COMMISSIONED AND SWORN, PERSONALLY APPEARED Gregory P. Chaney TO ME KNOWN TO BE THE PERSON DESCRIBED IN AND WHO EXECUTED THE ABOVE AND FOREGOING INSTRUMENT, AND ACKNOWLEDGED TO ME THAT HE/SHE SIGNED AND SEALED THE SAME FREELY AND VOLUNTARILY FOR THE USES AND PURPOSES THEREIN MENTIONED, BEING FULLY AUTHORIZED TO DO SO. WITNESS MY HAND AND OFFICIAL SEAL THE DAY AND YEAR THIS CERTIFICATE FIRST ABOVE WRITTEN.

STATE OF ALASKA
OFFICIAL SEAL
Susan B. Phillips
NOTARY PUBLIC
My Commission Expires 1/10/22

NOTARY PUBLIC FOR ALASKA Susan B. Phillips

MY COMMISSION EXPIRES 1/10/22

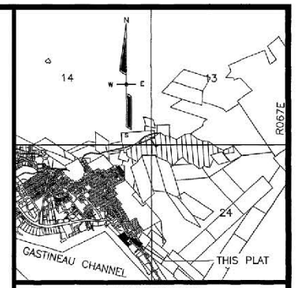

VICINITY MAP
SCALE 1" = 1/2 MILE

DETAIL A
SCALE 1" = 2'

DETAIL B
SCALE 1" = 2'

SOUTH FRANKLIN STREET R/W VARIES

BASIS OF BEARING S35°56'28"E 2546.74'

WARNERS WHARF 20' R/W

PEOPLES WHARF 10' R/W

LOT 1A
0.79 AC.
33875 S.F.

LOT 2A
0.87 AC.
38133 S.F.

LOT 4A
0.86 AC.
37378 S.F.

LOT 6 PLAT NO. 340

LOT 8 PLAT NO. 340

LOT 10 PLAT NO. 340

LOT 11 PLAT NO. 340

LOT 12 PLAT NO. 340

LOT 13A PLAT NO. 86-3

LOT 13C PLAT NO. 2003-8

LOT 2 PLAT NO. 340

LOT 1 PLAT NO. 340

FR. LOT 9B BK: 554 PG: 470

FR. LOT 9B MINER'S HALL TIDELAND LEASE JUNEAU DOC. 2006-006404-0

MINERS HALL BATTER PILE EASEMENT JUNEAU DOC. 2006-006405-0

TIMBERWOLF VENTURES TIDELAND LEASE JUNEAU DOC. 2015-002356-0

TRIPP CORP TIDELAND LEASE JUNEAU DOC. 2019-000849-0

PEOPLES WHARF TIDELAND LEASE JUNEAU DOC. 2007-003690-0

ACCESS AND UTILITY EASEMENT JUNEAU DOC. (CURRENTLY UNRECORDED)

CONSTRUCTION AND MAINTENANCE EASEMENT DEDICATED THIS PLAT

50.00' PUBLIC ACCESS ESMT VACATED THIS PLAT

VACATED PROPERTY LINE

FORMER LOT 1

FORMER LOT 2

FORMER LOT 3

FORMER LOT 4

GASTINEAU CHANNEL

SCALE
1"=30'
0 10 20 30 60 90
US FEET

LEGEND

- RECOVERED ALUMINUM MONUMENT
- RECOVERED ½" REBAR WITH PLASTIC CAP 7712-S
- COMPUTED CORNER, NOTHING FOUND OR SET
- SET ½" X 30" REBAR WITH 1 ½" STAINLESS STEEL CAP, LS 107707
- SET PK NAIL WITH 1 ½" STAINLESS STEEL FLASHER, LS-107707
- ( ) RECORD DATA, SEE NOTES 3 & 4
- EASEMENT VACATED THIS PLAT
- VACATED PROPERTY LINE
- EASEMENT DEDICATED THIS PLAT
- TIDELAND LEASE LINE
- SURVEY TIE
- EXISTING EASEMENT LINE
- SURVEYED LOT LINE
- SURROUNDING STATUS LINE

TYPICAL CAP SET

PND LS-107707

CITY & BOROUGH OF JUNEAU

Attest: Elizabeth J. McEwen, Municipal Clerk
City and Borough of Juneau

COMMUNITY DEVELOPMENT APPROVAL

I HEREBY CERTIFY THAT THE PLAT HEREON HAS BEEN FOUND TO COMPLY WITH TITLE 49 OF THE CODE AND CITY AND BOROUGH OF JUNEAU AND IS APPROVED BY THE CITY AND BOROUGH OF JUNEAU, DEPARTMENT OF COMMUNITY DEVELOPMENT, FOR RECORDING IN THE OFFICE OF THE JUNEAU RECORDING DISTRICT, JUNEAU, ALASKA.

BY _____ DATE 5/28/2019

JILL MACLEAN, DIRECTOR
CITY AND BOROUGH OF JUNEAU
COMMUNITY DEVELOPMENT DEPARTMENT

SURVEYORS CERTIFICATE

I, IAIN BROWN, IN MY CAPACITY AS A PROFESSIONAL LAND SURVEYOR REGISTERED IN THE STATE OF ALASKA, CERTIFY THAT THIS PLAT REPRESENTS THE SURVEY MADE BY ME OR UNDER MY DIRECT SUPERVISION, THAT THE ACCURACY OF THE SURVEY IS WITHIN THE LIMITS REQUIRED BY TITLE 49 OF THE CODE OF THE CITY AND BOROUGH OF JUNEAU, THAT ALL DIMENSIONAL AND RELATIVE BEARINGS ARE CORRECT, AND THAT MONUMENTS ARE SET IN PLACE AND NOTED UPON THIS PLAT AS PRESENTED.

Date 5/15/19

STATE OF ALASKA
49TH
IAIN C. BROWN
LS-107707
5/15/19
REGISTERED PROFESSIONAL LAND SURVEYOR

BASIS OF BEARING

THE BASIS OF BEARING FOR THIS PLAT IS THE CALCULATED RECORD BEARING OF S35°56'28"E BETWEEN THE NORTH CORNER OF LOT 7A, BLOCK 83, TIDELANDS ADDITION TO THE CITY OF JUNEAU, PLAT NO 87-10 AND THE RESET MARKING RM C44 ATS NO. 3, AS NOTED.

NOTES

1. THE ERROR OF CLOSURE OF THIS SURVEY DOES NOT EXCEED 1:5000
2. ALL DISTANCES ARE MEASURED IN U.S. SURVEY FEET, REDUCED TO HORIZONTAL.
3. RECORD INFORMATION DERIVED FROM ARCHIPELAGO SUBDIVISION, A SUBDIVISION OF LOT 7A1, LOT 9A AND FRACTION OF LOT 9B, BLOCK 83 TIDELANDS ADDITION, ATS NO. 3, PLAT NO. 2013-22. RECORD INFORMATION ALSO OBTAINED FROM JUNEAU DOCUMENT NO. 2015-002355-0.
4. WHERE DIFFERENT FROM MEASURED OR CALCULATED, RECORD DIMENSIONS ARE SHOWN IN PARENTHESIS
5. PARTS OF THIS SUBDIVISION ARE LOCATED IN A VELOCITY FLOOD ZONE, ACCORDING TO THE ADOPTED FLOOD INSURANCE RATE MAPS OF THE CITY AND BOROUGH OF JUNEAU. SPECIAL REGULATIONS MAY APPLY.
6. IN ACCORDANCE WITH CITY CODE, THE COMMUNITY DEVELOPMENT DIRECTOR AMENDED THE LANDSLIDE AND AVALANCHE MAPS TO REMOVE FORMER LOTS 1, 2, 3, AND 4 FROM THE MODERATE HAZARD ZONE (AME2018-0010).
7. EXECUTION OF THIS PLAT VACATES THE EXISTING 50' PUBLIC ACCESS EASEMENT, DEDICATED BY PLAT 2013-22, FROM SOUTH FRANKLIN STREET TO LOT 4.
8. DOMESTIC WATER AND SANITARY SEWER DISPOSAL PROVIDED BY THE CITY AND BOROUGH OF JUNEAU PUBLIC UTILITIES.
9. THE VERTICAL DATUM FOR THIS SURVEY IS MEAN LOWER LOW WATER BASED ON A GPS RTK TIE TO NOAA BENCH MARK "2210 K 2011" LOCATED AT THE BASE OF A FLAGPOLE BY THE JUNEAU ARTS/CULTURE CENTER WITH A PUBLISHED ELEVATION OF 27.10' MLLW.
10. THIS SUBDIVISION IS AFFECTED BY A CITY OF JUNEAU DOCK MAINTENANCE, OPERATION AND RECONSTRUCTION EASEMENT, DATED FEBRUARY 14, 1967, RECORDED AS JUNEAU BOOK 85, PAGE 20, LOCATION UNDETERMINED AND NOT SHOWN HEREON
11. THIS SUBDIVISION IS AFFECTED BY A CITY OF JUNEAU JOINT USE AND OCCUPANCY EASEMENT, DATED AUGUST 05, 1964, RECORDED AS BOOK 73 PAGE 335, LOCATION UNDETERMINED AND NOT SHOWN HEREON.

2019-19
Plat #
Juneau
Rec'd for
5/29/19
Date
Time 10:35AM

PLAT OF
LOTS 1A, 2A, & 4A
A SUBDIVISION OF
LOTS 1,2,3, & 4
ARCHIPELAGO SUBDIVISON
WITHIN CITY & BOROUGH OF JUNEAU, ALASKA
JUNEAU RECORDING DISTRICT

STATE RECORDER'S OFFICE AT JUNEAU

OWNERS: ARCHIPELAGO PROPERTIES LLC, ONE SEALASKA PLAZA, STE 300, JUNEAU, ALASKA 99801 & CITY AND BOROUGH OF JUNEAU, 155 SOUTH SEWARD STREET, JUNEAU, ALASKA 99801

PND ENGINEERS, INC
1506 West 36th Avenue
Anchorage, Alaska 99503 Phone: 907.561.1011
www.pndengineers.com
AK. LIC# AECC250

SCALE:	1" = 30'	FIELD BOOK:	N/A	GRID:	JUNEAU
DESIGNED BY:	IB	DATE:	2/21/19	CASE NO:	MIP2019 0004
CHECKED BY:	DS/MW	PROJECT NO:	182045	SHEET NO:	1 OF 1

Planning Commission
(907) 586-0715
PC_Comments@juneau.org
www.juneau.org/plancomm
155 S. Seward Street • Juneau, AK 99801

PLANNING COMMISSION
NOTICE OF DECISION
Date: February 3, 2020
Case No.: USE2019 0021

Tidland/Schmidt Architects, P.C.
ATTN: Frank Schmidt
3611 SW Hood Ave, Suite 200
Portland, OR 97239

Proposal:	A Conditional Use Permit for two (2) two-story, commercial mixed-use buildings
Property Address:	365 S. Franklin Street
Legal Description:	Archipelago Lot 1A
Parcel Code No.:	1C070K830022
Hearing Date:	January 28, 2020

The Planning Commission, at its regular public meeting, adopted the analysis and findings listed in the attached memorandum dated January 21, 2020, and approved the Conditional Use Permit for two (2) two-story, commercial mixed-use buildings, to be conducted as described in the project description and project drawings submitted with the application and with the following conditions as amended during the meeting:

1. Prior to issuance of a Building Permit, the applicant shall submit a lighting plan illustrating the location and type of exterior lighting proposed for the development. All exterior lighting fixtures shall be of a "full cutoff" design, and exterior lighting shall be designed and located to minimize offsite glare. Approval of the plan shall be at the discretion of the Community Development Department, according to the requirements at CBJ 49.40.230(d).
2. Exterior lighting shall not be used in a manner that produces glare on public highways or neighboring property.
3. Prior to issuance of a Building Permit, the applicant must submit documentation to demonstrate that all applicable parking code requirements have been met, in conformance with CBJ 49.40.200.

4. The applicant shall consider all possible tools and avenues available to ensure year-round occupancy of the structures, including, but not limited to, housing.

Attachments: January 21, 2020 memorandum from Teri Camery, Community Development, to the CBJ Planning Commission regarding USE2019 0021.

This Notice of Decision does not authorize construction activity. Prior to starting any project, it is the applicant's responsibility to obtain the required Building Permits.

This Notice of Decision constitutes a final decision of the CBJ Planning Commission. Appeals must be brought to the CBJ Assembly in accordance with CBJ 01.50.030. Appeals must be filed by 4:30 P.M. on the day twenty days from the date the decision is filed with the City Clerk, pursuant to CBJ 01.50.030 (c). Any action by the applicant in reliance on the decision of the Planning Commission shall be at the risk that the decision may be reversed on appeal (CBJ 49.20.120).

Effective Date: The permit is effective upon approval by the Commission, January 28, 2020

Expiration Date: The permit will expire 18 months after the effective date, or July 28, 2021, if no Building Permit has been issued and substantial construction progress has not been made in accordance with the plans for which the development permit was authorized. Application for permit extension must be submitted thirty days prior to the expiration date.

Project Planner: _____ _____ for ML

Teri Camery, Senior Planner
Community Development Department

Michael LeVine, Chair
Planning Commission

_____ 2/3/2020

Filed With Municipal Clerk

Date

cc: Plan Review

NOTE: The Americans with Disabilities Act (ADA) is a federal civil rights law that may affect this development project. ADA regulations have access requirements above and beyond CBJ-adopted regulations. Owners and designers are responsible for compliance with ADA. Contact an ADA - trained architect or other ADA trained personnel with questions about the ADA: Department of Justice (202) 272-5434, or fax (202) 272-5447, NW Disability Business Technical Center (800) 949-4232, or fax (360) 438-3208.

CITY AND BOROUGH OF JUNEAU
ALASKA'S CAPITAL CITY
COMMUNITY DEVELOPMENT

(907) 586-0715
CDD_Admin@juneau.org
www.juneau.org/CDD
155 S. Seward Street • Juneau, AK 99801

DATE: January 21, 2020

TO: Planning Commission

FROM: Teri Camery, Senior Planner
Community Development Department

CASE NO.: USE2019 0021

PROPOSAL: A Conditional Use Permit for two (2) two-story commercial mixed use buildings

GENERAL INFORMATION

Applicant:	Tidland/Schmidt Architects, P.C.
Property Owner:	Archipelago Properties, LLC
Property Address:	365 S. Franklin Street
Legal Description:	Archipelago Lot 1A
Parcel Code Number:	1C070K830022
Site Size:	33,875 square feet
Comprehensive Plan Land Use Designation:	Marine Commercial
Zoning:	Waterfront Commercial
Utilities:	City water and sewer
Access:	South Franklin Street
Existing Land Use:	Vacant lot
Surrounding Land Use:	North - Library and parking garage; Waterfront Commercial South - Retail; Waterfront Commercial East - South Franklin Street; Mixed Use

West - Cruise ship dock; Waterfront Commercial

VICINITY MAP

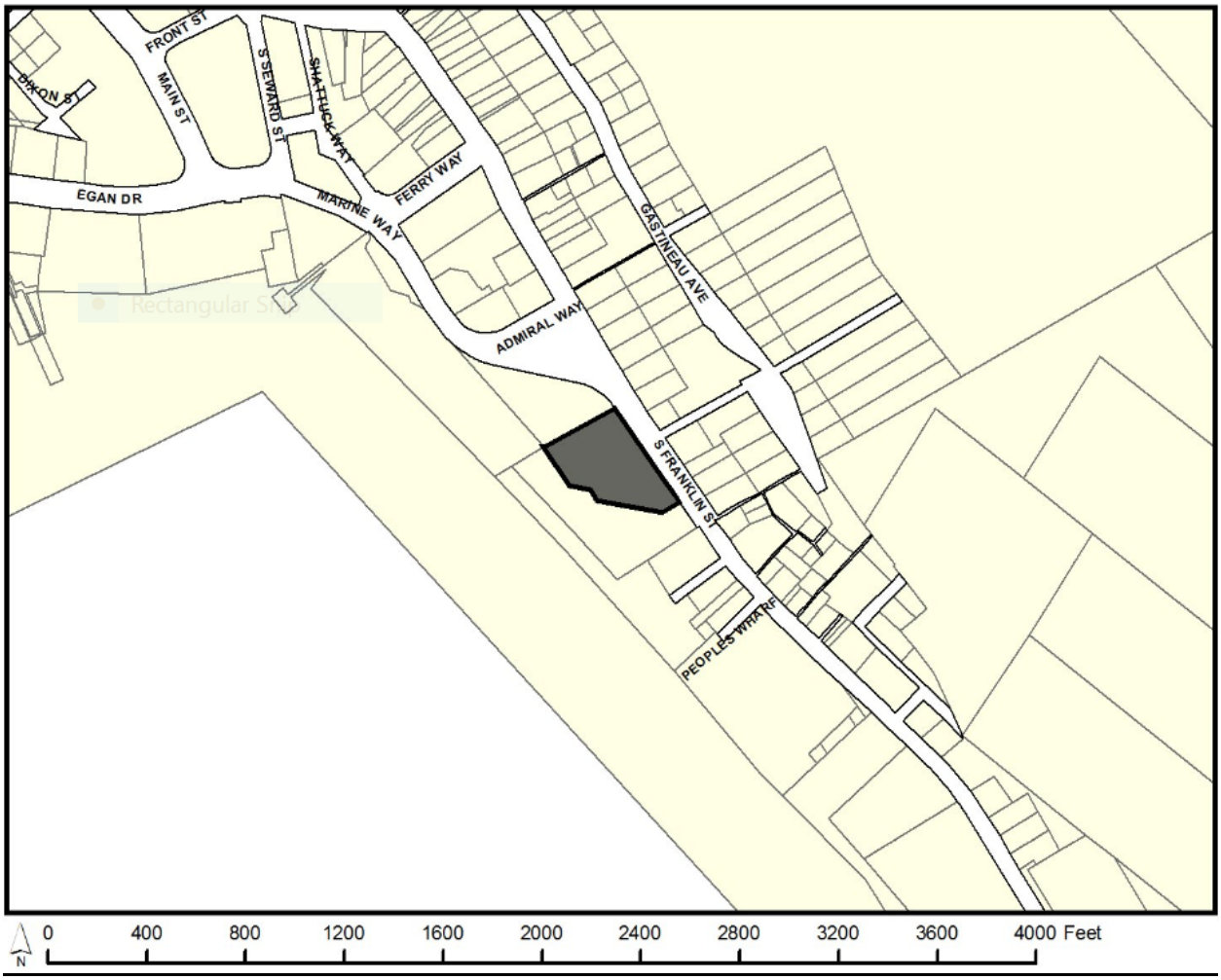

ATTACHMENTS

Attachment 1 Development Permit Application
Attachment 2 Conditional Use Permit Application
Attachment 3 Pre-application conference meeting notes
Attachment 4 Historic Resources Advisory Committee letter, 12-13-19
Attachment 5 Project Narrative
Attachment 6 Hazard Map Amendment Notice of Decision
Attachment 7 Preliminary Construction Schedule
Attachment 8 Subdivision Plat

Attachment 9 Landscaping Plan
Attachment 10 Pedestrian Circulation Plan
Attachment 11 Drainage Plan
Attachment 12 Utility Plan
Attachment 13 Flood map drawing
Attachment 14 General Site Development Plan
Attachment 15 Setback Plan
Attachment 16 First and Second floor site plans
Attachment 17 Building height calculations and exterior elevations
Attachment 18 Project renderings
Attachment 19 Site photometrics and light fixture types
Attachment 20 Color and material boards
Attachment 21 USE2018 0015 City Project application, adjacent to the development
Attachment 22 USE2018 0015 Notice of Decision
Attachment 23 Historic District Boundary Map
Attachment 24 Agency comments
Attachment 25 Leasing Plans
Attachment 26 Downtown Historic District Design Standards and Guidelines, Chapters 4, 5 & 7

PROJECT DESCRIPTION

The applicant requests a Conditional Use Permit for the development of two (2) two-story mixed-use commercial buildings on the downtown waterfront adjacent to the downtown library/parking garage. Leasing plans included in Attachment 25 indicate two commercial options: one, a combination of retail, office, and restaurant uses; and two, retail, office, and storage uses. The first 40 feet of the property lies with the Downtown Historic District, as shown in Attachment 23; review therefore includes an analysis of Historic District guidelines and recommendations.

The applicant has requested a Variance to reduce the parking requirement from 80 off-street spaces to zero spaces, concurrently under review as VAR2019 0005. The Variance is based on the option with the highest parking requirement, which includes the restaurant instead of storage.

BACKGROUND

The development is adjacent to a recently approved City and Borough of Juneau (CBJ) development that includes a transportation staging area and public restrooms. The CBJ development was approved as USE2018 00015/CSP2018 0010 and FZE2018 00001 on November 15, 2018. The project application and final Notice of Decision for the CBJ development are included in Attachments 21 and 22.

The subject property is the site of the former Juneau Cold Storage building, which burned in the

1980s. The property has been mostly vacant since Archipelago Properties LLC purchased it; for several years, however, it was leased to private businesses for seasonal food and retail uses.

The proposed development is the result of several years of cooperation and coordination between Archipelago Properties LLC and CBJ Docks and Harbors, starting in 2017. These efforts addressed property boundaries, project design, and public amenities. (Project Narrative p. 13, Attachment 5) The final plat delineating Archipelago and CBJ property was approved in May 2019 at Plat 2019-19, included in Attachment 8.

ANALYSIS

Project Site and Design

The site is zoned Waterfront Commercial, which requires uses to be water-dependent, water-related, or water-oriented. These definitions are listed in CBJ 49.80.120 as follows:

> *Water-dependent means a use or activity which can be carried out only on, in, or adjacent to water areas because the use requires access to the water body.*
>
> *Water-oriented means uses or mixtures of uses which would benefit from being near the water and are intrinsic to waterfront development and which meet all of the following criteria:*
>
> *(1) Uses must be part of a larger fully-planned development which also incorporates water-dependent or water-related uses;*
> *(2) Uses which are not directly water-dependent or water-related must be necessary to the overall development of the project;*
> *(3) Uses must be integrated functionally by architectural and site designs which are sensitive to the waterfront site;*
> *(4) Uses must act as economic stimuli and anchor points to enable other forms of development, particularly public access improvements; and*
> *(5) Uses must contribute to a diverse and healthy downtown core.*
>
> *Water-related means a use or activity which is not directly dependent upon access to a water body, but which provides goods or services that are directly associated with water dependence and which, if not located adjacent to water, would result in a public loss of quality in the goods or services offered.*

The proposed development is consistent with the water-related definition because the commercial development provides goods and services which are directly associated with the water-dependent cruise ship mooring facility.

Setbacks and Height Requirements

Waterfront Commercial requires 10-foot setbacks on all sides. Waterfront Commercial also has a 35-foot height limit. In addition, the development must comply with Historic District height recommendations and setbacks whenever practicable, within the first 40 feet of the development that falls within the district. Recommended Historic District setbacks are zero feet on the front and sides, with a height limitation of 38 feet.

Project drawings in attachments 16 and 17 demonstrate that the development complies with height requirements. Waterfront Commercial setbacks have been followed in the rear, both sides, and for the front setback of Building A. Building B complies with the zero-foot front setback recommended in the Historic District plan.

Historic District Requirements

The first 40 feet of the property is located within the Downtown Historic District (Attachment 23). Therefore Downtown Historic District Standards and Guidelines apply, specifically those listed in Chapter 4, Design Guidelines for Historic Building Materials; Chapter 5, Design Guidelines for Historic Building Elements; and Chapter 7, Design Guidelines for New Construction. These chapters are provided for reference in Attachment 26.

The current Historic District Map was adopted by ordinance in 2013 (Serial No. 2013-01). CBJ Code 49.70.530, Standards for Historic District Design Review, states that the reviewing body (the Planning Commission, when a Conditional Use Permit is required) shall use "applicable guidelines and policies contained in the downtown historic development plan." Staff notes that though the historic district map has been adopted, the Downtown Historic District Standards and Guidelines have not been officially adopted in the 2013 Juneau Comprehensive Plan or in the Land Use Code.

The Historic District Advisory Committee (HRAC) reviewed the development with the applicant at its December 6, 2019 meeting. The HRAC provided a letter dated December 13, 2019 with recommendations, included as Attachment 4. The HRAC found many aspects of the design that comply with the Downtown Historic District Design Standards and Guidelines including: the first floor transparency along South Franklin Street; the placement of a canopy above the first floor along South Franklin Street; the height and scale of the buildings; the spacing of façade doors and windows; and the decorative paving feature under the central canopy. The applicant's Project Narrative (Attachment 5, pp. 7-11) includes a point by point response to all 12 points in these recommendations. Color and material boards are also provided in Attachment 20.

Staff respectfully suggests that Commissioners read the HRAC letter and the applicant's response in full. A partial summary is provided below:

- The development meets the recommended Historic District front yard setback of zero on

Building B. The applicant has explained that it is not possible to meet the zero-foot front yard setback on Building A, nor the recommended zero-foot side yard setbacks, due to the loading zone on the south side and the underground utilities on the north side.

- The applicant has altered the gable roof design and replaced it with a peaked false front design per HRAC's recommendation. The applicant disagrees with HRAC's recommendation to remove the clock tower; it therefore remains in the plans.
- The development includes a canopy as required in the Historic District, however HRAC has recommended a different design for the central canopy with a flat roof. The applicant disagrees and notes that the section 7.13 allows for new interpretations of traditional building styles.
- The applicant requests the option to use single- or double-hung windows on the second story, rather than just double-hung as stated by the HRAC and noted in Section 7.26-7.28.
- The HRAC recommends horizontal siding rather than vertical, in accordance with 7.11. The applicant would like to use both approaches.
- The applicant has developed a recessed entryway on the right-of-way line on South Franklin but requests flexibility with other entryways.
- The applicant has incorporated kick plates into the design as recommended.

Although the design features of the buildings contribute to the overall character of the development, certain design features will be more visible than others. Directly across South Franklin Street are two historic buildings that are listed as "contributing" to the authenticity of the Downtown Historic District. Both of these historic buildings have horizontal siding on the first and second floors. With this in mind, staff recommends as a condition of approval that the applicant be required to use horizontal siding on the first floor, as follows:

1. The development shall utilize horizontal siding on the first floor of both buildings.

With this recommended condition, staff concludes that the proposed development significantly complies with the Historic District Plan.

Parking

The proposed development includes one loading zone on the southwest side of the property, most clearly shown in the Leasing Plans, Attachment 25. The applicant has requested a Variance to reduce the off-street parking requirement from 80 spaces to zero spaces. This figure includes a 30 percent reduction from the full parking requirement of 114, since the development is located in the PD-2 Parking District. The variance is concurrently under review as VAR2019 0005.

Because the leasing arrangements for the two buildings are not final, the applicant has provided two scenarios for building usage, Option A and Option B. The off-street parking requirement and variance analysis is based on Option B with the highest parking requirement of 80 spaces, versus Option A which is 60 spaces. Parking requirements are listed in CBJ Code 49.40.210.

Pedestrian and Vehicular Circulation

The proposed development has been specifically designed to be pedestrian-friendly, and includes a pedestrian circulation plan (Attachment 10). With just one loading zone and no parking proposed, vehicular circulation is not relevant.

Vegetative Cover and Landscaping

The vegetative cover requirement for the Waterfront Commercial zoning district is 10 percent. With a lot size of 33,875 square feet, the requirement is therefore 3,387 square feet. The applicant has proposed 4,249 square feet of landscaping, for 12.53 percent of the lot, exceeding the requirement. Pages 5-6 of the Project Narrative, Attachment 5, describe the landscaping as a combination of traditional planters and open areas. The landscaping site plan in Attachment 9 provides additional detail. The applicant also proposes hanging baskets, however the baskets are not included in the calculation to meet the landscape requirements. The applicant notes other points of interest under consideration, such as a decorative hardscape representing a river or channel, a sculpture, or a totem. Exact designs have not been developed.

Drainage

A drainage site plan has been included as Attachment 11, in addition to the written description in the Project Narrative (Attachment 5, pp. 6-7). The drainage plan has a combination of features including an oil-water separator, catch basins and trench drains, perforated foundation drains, and awning and roof drains. The drainage plan will be further reviewed by CBJ during the building/grading permit review process.

Lighting

A lighting site plan with fixture types has been included as Attachment 19, in addition to the written description in the Project Narrative (Attachment 5, p. 6). The applicant states that the lighting design will include accent lights and LED display lights to provide interest within the central canopy and roof structure.

04 CBJAC 050.020 establishes performance standards for commercial and industrial uses. Section (b) requires that industrial and exterior lighting not create glare on public highways or neighboring property. Staff recommends the following standard conditions, which were also applied to the adjacent CBJ development:

2. Prior to issuance of a building permit, the applicant shall submit a lighting plan illustrating the location and type of exterior lighting proposed for the development. All exterior lighting fixtures shall be of a “full cutoff” design, and exterior lighting shall

be designed and located to minimize offsite glare. Approval of the plan shall be at the discretion of the Community Development Department, according to the requirements at CBJ 49.40.230(d).

3. Exterior lighting shall not be used in a manner that produces glare on public highways or neighboring property.

Noise

No significant noise is expected from the development except during construction. The construction schedule will comply with the CBJ Noise Ordinance.

Public Health or Safety

The Archipelago property is within an area originally designated as a moderate hazard zone. CBJ Docks and Harbors applied to the Community Development Department (CDD) for removal of the area from the hazard zone, with supporting analysis. The CDD Director approved the amendment to remove the Archipelago property from the hazard zone in 2018, per the attached Notice of Decision (Attachment 6).

In addition, the project area is adjacent to a FEMA-designated Velocity Flood Zone with a base flood elevation of 25 feet in current maps. In addition, flood regulations prohibit habitable structures seaward of the mean high tide line. The project drawings in Attachment 13 demonstrate that the proposed development is outside of the flood zone and landward of mean high tide and therefore complies with all applicable regulations. Staff notes that the FEMA draft flood maps, expected to be adopted in 2020, do not include any changes for this particular coastal area.

In summary, project site has been formally removed from the moderate hazard zone and lies entirely outside the Velocity flood zone. No evidence indicates any public health or safety impacts from the proposed development.

Habitat

The proposed development does not affect any sensitive habitat. The applicant has provided a drainage plan that will address stormwater. The project site is located in the mapped 'Special Waterfront Area' that runs along the downtown tidelands. The project is a permissible use in this area (CBJ 49.70.960(b)). A Special Waterfront Area is an area that is designated for development and considered to have low habitat value.

Property Value or Neighborhood Harmony

The project site is surrounded by a cruise ship dock to the west, the CBJ parking garage and library to the north, Franklin Street and Mixed Use retail to the east, and the recently approved CBJ transportation staging area and restrooms to the south, followed by more retail uses. The proposed development is typical of waterfront developments in the Waterfront Commercial zoning district. No comments were received by the CBJ Assessor's office during the agency review period regarding property value. No evidence suggests that the development will have a significant adverse effect on property value or neighborhood harmony.

AGENCY AND PUBLIC COMMENTS

An agency review period was conducted from October 14 to October 30, 2019. Comments were received from CBJ Streets, the CCFR Fire Marshal, and CBJ Public Works and Engineering, which are included in Attachment 24.

CBJ Streets noted that issues with storm drains and setbacks were addressed during the pre-application conference; that the traffic circulation was backwards in the parking area (staff notes that this applies to the previously approved CBJ development. The proposed Archipelago development does not include any parking); and that LED lighting must be included in the canopy design.

CBJ CCFR noted requirements for fire alarm systems.

CBJ Engineering and Public Works had no concerns and noted that further review would be managed through building permits.

No public comments have been received to date.

CONFORMITY WITH ADOPTED PLANS

2013 Juneau Comprehensive Plan

The 2013 Juneau Comprehensive Plan designates the subject parcel as Marine Commercial, defined as:

> *Land to be used for water-dependent commercial uses such as marinas/boat harbors, marine vessel and equipment sales and repair services, convenience goods and services for commercial and sport fishing, marine recreation and marine tourism activities such as food and beverage services, toilet and bathing facilities, bait and ice shops, small scale fish processing facilities, hotels and motels, and similar goods and services to support mariners and their guests. Float homes, house boats, and live-aboards would be residential uses to be allowed within an MC district.*

The proposed development supports marine tourism amenities that are substantially consistent with this definition.

Chapter Five, Economic Development, includes the following Policies, Development Guidelines, and Implementing Actions related to the proposed development:

> **Policy 5.1** *To develop and sustain a diverse economy, providing opportunities for employment for all residents.*
>
> > **5.1–1A1.** *Work with provide-sector industries and businesses and public sector agencies that are interested in locating or expanding within the City and Borough of Juneau, and consider offering land, tax incentives, or other benefits to encourage new development.*
>
> **Policy 5.5** *To maintain and strengthen downtown Juneau as a safe, dynamic, and pleasant center for government and legislative activities, public gatherings, cultural and entertainment events, and residential and commercial activities in a manner that complements its rich historic character and building forms.*
>
> > **5.5–DG 1.** *When reviewing applications for new downtown Juneau development, consider the visual impacts on downtown building form, urban design and view corridors, as well as impacts on the livability of downtown with regard to circulation, housing accommodations, air quality, noise and hazard abatement and provision of goods and services, to ensure downtown provides a clean, safe, attractive, dynamic, interesting, enjoyable, walkable, culturally diverse and affordable neighborhood within which to live, work and play.*
> >
> > **5.5–DG 2**. *Consider the policies, guidelines and development recommendations of plans like the CBJ Long Range Waterfront Plan, the Willoughby District Plan, and the Capital Transit Plan when reviewing capital improvement programs and development permits for, or applicable to, the downtown Juneau area.*
>
> **Policy 5.6** *To encourage tourism, convention, and other visitor-related activities through the development of appropriate facilities and services, while protecting Juneau's natural, cultural, and economic attractions for local residents and visitors alike, and to participate in the accommodation of the future growth of tourism in a manner that addresses both community and industry concerns.*
>
> **Policy 5.11** *To encourage the location and growth of locally-based basic sector industries that provide year-round, full-time employment and provide tax revenues that support public services.*

> **Policy 5.9** *To facilitate availability of sufficient and suitable water-based facilities and associated land-based acreage to support water-dependent uses, and to work closely with the public and private sectors to facilitate sustainable marine commerce, commercial fishing, seafood processing, recreation, public access to the shoreline, and enjoyment of the waterfront through development of well-designed port facilities.*
>
> > **Development Guideline 5.9–DG 1.** *Assure public access to the shoreline and water when reviewing development applications.*
> >
> > **Development Guideline 5.9–DG 2.** *To the greatest extent practicable, orient new structures and facilities located on the waterfront in such a way as to preserve views of the water from public roadways and vista points.*
> >
> > **Implementing Action 5.9–1A3.** *Assist with coordination of cruise ship traffic and commercial fishing operations to minimize conflicts.*

The proposed development addresses these policies and actions by providing new commercial options for tourists and residents, while preserving water views, public access to the shoreline, and public gathering spaces. In addition, the development complies with the 2004 Long Range Waterfront Plan, and with Downtown Historic District guidelines to the greatest extent practicable.

2004 Long Range Waterfront Development Plan

The Long Range Waterfront Development Plan divides the downtown waterfront from the Douglas Bridge to the Little Rock Dump into specific areas with recommendations for future development. The subject property is within Area D, the Franklin Street Corridor. The Plan identifies two options for development in this area, D1 and D2. Option D1 calls for the creation of pocket parks, a new visitor information center, cultural facilities, and mixed use redevelopment. Option D2 is similar except that it calls for city-owned cruise ship docks to be modified to accommodate larger ships; this option is now complete.

The Project Narrative, Attachment 5 pp. 11-12, includes an explanation of how the development complies with this plan with the proposed mixed-use commercial development. Staff concurs with the applicant's explanation.

2015 Juneau Economic Development Plan

The 2015 Juneau Economic Development Plan has eight initiatives. Initiative Seven is *Revitalize Downtown*, which includes an objective to develop a downtown improvement strategy. The proposed development will provide tourist and community amenities, retail and restaurant options, and will increase property tax revenue. The development substantially complies with this plan.

Downtown Historic District Design Standards and Guidelines

Compliance with the Downtown Historic District Design Standards and Guidelines has been addressed in the Analysis section of this report. The development substantially conforms with Historic District Guidelines where practicable.

FINDINGS

CBJ 49.15.330 (e)(1), Review of Director's Determinations, states that the Planning Commission shall review the Director's report to consider:

1. Whether the application is complete;
2. Whether the proposed use is appropriate according to the Table of Permissible Uses; and,
3. Whether the development as proposed will comply with the other requirements of this chapter.

The Commission shall adopt the Director's determination on the three items above unless it finds, by a preponderance of the evidence, that the Director's determination was in error, and states its reasoning for each finding with particularity.

CBJ 49.15.330 (f), Commission Determinations, states that even if the Commission adopts the Director's determination, it may nonetheless deny or condition the permit if it concludes, based upon its own independent review of the information submitted at the public hearing, that the development will more probably than not:

1. Materially endanger the public health or safety;
2. Substantially decrease the value of or be out of harmony with property in the neighboring area; or,
3. Not be in general conformity with the comprehensive plan, thoroughfare plan, or other officially adopted plans.

Per CBJ 49.15.330 (e) & (f), Review of Director's & Commission's Determinations, the Director makes the following findings on the proposed development:

1. Is the application for the requested conditional use permit complete?

Yes. Staff finds the application contains the information necessary to conduct full review of the proposed operations. The application submittal by the applicant, including the appropriate fees, substantially conforms to the requirements of CBJ Chapter 49.15.

2. Is the proposed use appropriate according to the Table of Permissible Uses?

Yes. The requested permit is appropriate according to the Table of Permissible Uses. The permit is listed at CBJ 49.25.300, Section 2.200 for the Waterfront Commercial zoning district.

3. Will the proposed development comply with the other requirements of this chapter?

Yes. The proposed development complies with the other requirements of this chapter. Public notice of this project was provided in the January 17 and January 24, 2020 issues of the Juneau Empire's "Your Municipality" section, and a Notice of Public Hearing was mailed to all property owners within 500 feet of the subject parcel. Moreover, a Public Notice Sign was posted on the subject parcel, visible from the public Right of Way.

4. Will the proposed development materially endanger the public health or safety?

No. As described in the preceding analysis, the proposed development has been formally removed from the moderate hazard zone and lies outside of the velocity flood zone and is landward of the mean high tide line, in conformance with all requirements. No evidence indicates that the proposed development will materially endanger public health or safety.

5. Will the proposed development substantially decrease the value of or be out of harmony with property in the neighboring area?

No. Based on the preceding analysis, the proposed development is comparable to other waterfront developments in the neighboring area which provide a variety of retail services to visitors and the general public. No evidence indicates that the development will decrease the value of, or be out of harmony with, property in the neighboring area.

6. Will the proposed development be in general conformity with the land use plan, thoroughfare plan, or other officially adopted plans?

Yes. Based on the preceding analysis, the proposed development is in general conformity with the 2013 Juneau Comprehensive Plan, the 2004 Long Range Waterfront Development Plan, the 2015 Juneau Economic Development Plan, and the Downtown Historic District Design Standards and Guidelines.

Per CBJ 49.70.900 (b)(3), General Provisions, the Director makes the following Juneau Coastal Management Program consistency determination:

7. Will the proposed development comply with the Juneau Coastal Management Program?

Yes. The proposed development does not affect any sensitive habitat. The project site is located in the mapped 'Special Waterfront Area' that runs along the downtown tidelands. The project is a permissible use in this area (CBJ 49.70.960(b)). A Special Waterfront Area is an area

that is designated for development and considered to have low habitat value.

RECOMMENDATION

Staff recommends that the Planning Commission adopt the Director's analysis and findings and grant the requested Conditional Use Permit for two (2) two-story commercial mixed use buildings. The approval is subject to the following conditions:

1. The development shall utilize horizontal siding on the first floor of both buildings.

2. Prior to issuance of a building permit, the applicant shall submit a lighting plan illustrating the location and type of exterior lighting proposed for the development. All exterior lighting fixtures shall be of a "full cutoff" design, and exterior lighting shall be designed and located to minimize offsite glare. Approval of the plan shall be at the discretion of the Community Development Department, according to the requirements at CBJ 49.40.230(d).

3. Exterior lighting shall not be used in a manner that produces glare on public highways or neighboring property.

Community Development
(907) 586-0715
PC_Comments@juneau.org
www.juneau.org/plancomm
155 S. Seward Street • Juneau, AK 99801

BOARD OF ADJUSTMENT
NOTICE OF DECISION

Date: February 6, 2020
File No.: VAR2019 0005

Tiland/Schmidt Architects, P.C.
3611 Southwest Hood Avenue, Suite 200
Portland, OR 97239

Proposal:	A Variance to reduce the parking requirement to zero in association with USE2019 0021, a proposed two (2) two-story commercial mixed-use development
Property Address:	365 S. Franklin St.
Legal Description:	Lot 1A Archipelago
Parcel Code No.:	1C070K830022
Hearing Date:	January 28, 2020 and February 4, 2020

The Board of Adjustment, at its regular public meeting, adopted the analysis and findings listed in the attached memorandum dated January 22, 2020, and denied the non-administrative variance to reduce the off-street parking requirement to zero in association with USE2019 0021, a proposed two (2) two-story commercial mixed-use development. The Board of Adjustment amended Finding 2C as follows:

c. The grant of the variance is not detrimental to public health, safety, or welfare…

No. Based on the preceding analysis, a grant of the variance for a zero parking requirement may be detrimental to the public health, safety, or welfare by pushing employees or customers of the development to park in surrounding neighborhoods.

Attachment: January 22, 2020 memorandum from Teri Camery, Community Development, to the CBJ

Board of Adjustment regarding VAR2019 0005.

This Notice of Decision does not authorize construction activity. Prior to starting any development project, it is the applicant's responsibility to obtain the required building permits.

This Notice of Decision constitutes a final decision of the CBJ Board of Adjustment. Appeals must be brought to the CBJ Assembly in accordance with CBJ 01.50.030. Appeals must be filed by 4:30 p.m. on the day twenty days from the date the decision is filed with the City Clerk, pursuant to CBJ 01.50.030 (c). Any action by the applicant in reliance on the decision of the Board of Adjustment shall be at the risk that the decision may be reversed on appeal (CBJ 49.20.120).

Project Planner: _____
Teri Camery, Senior Planner
Community Development Department

_____
Michael LeVine, Chair
Planning Commission

_____
Filed With Municipal Clerk

2/11/2020
Date

cc: Plan Review

NOTE: The Americans with Disabilities Act (ADA) is a federal civil rights law that may affect this development project. ADA regulations have access requirements above and beyond CBJ-adopted regulations. Owners and designers are responsible for compliance with ADA. Contact an ADA-trained architect or other ADA trained personnel with questions about the ADA: Department of Justice (202) 272-5434, or fax (202) 272-5447, NW Disability Business Technical Center (800) 949-4232, or fax (360) 438-3208.

CITY AND BOROUGH OF JUNEAU
ALASKA'S CAPITAL CITY
COMMUNITY DEVELOPMENT

(907) 586-0715
CDD_Admin@juneau.org
www.juneau.org/CDD
155 S. Seward Street • Juneau, AK 99801

DATE: January 22, 2020

TO: Board of Adjustment

FROM: Teri Camery, Senior Planner
Community Development Department

FILE NO.: VAR2019 0005

PROPOSAL: A non-administrative variance to reduce the off-street parking requirement to zero in association with USE2019 0021, a proposed two (2) two-story commercial mixed-use development

GENERAL INFORMATION

Applicant:	Tiland/Schmidt Architects, P.C.
Property Owner:	Archipelago Properties, LLC
Property Address:	365 S. Franklin Street
Legal Description:	Lot 1A Archipelago
Parcel Code Number:	1C070K830022
Site Size:	33,875 square feet
Comprehensive Plan Land Use Designation:	Marine Commercial
Zoning:	Waterfront Commercial
Utilities:	City water and sewer
Access:	South Franklin Street
Existing Land Use:	Vacant

Surrounding Land Uses:

North - Library and Parking Garage; Waterfront Commercial
South - Retail; Waterfront Commercial
East - South Franklin Street; Mixed Use
West - Cruise ship dock; Waterfront Commercial

Vicinity Map

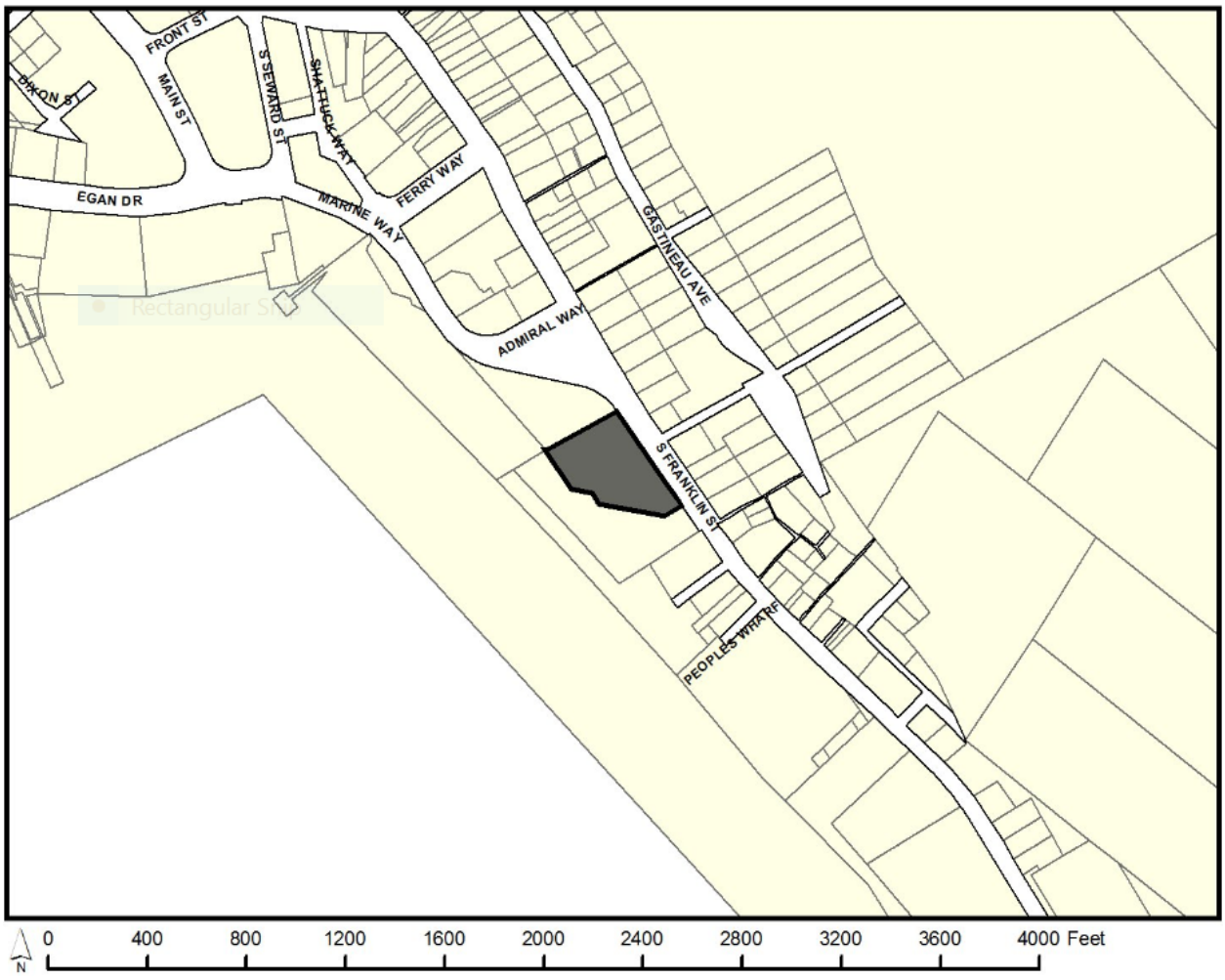

ATTACHMENTS

Attachment 1 Development Permit Application
Attachment 2 Variance Application
Attachment 3 Variance Project Narrative
Attachment 4 Site plan

Attachment 5 PD-1 and PD-2 Parking District Map
Attachment 6 Fee in-lieu of Parking District Map
Attachment 7 Subdivision plat 2019-19
Attachment 8 Flood Zone map
Attachment 9 Hazard Map Amendment Notice of Decision
Attachment 10 Public Comment

PROJECT DESCRIPTION

The applicant requests a variance to reduce the parking requirement from 80 spaces to zero spaces for a proposed two (2) two-story commercial mixed-used buildings on the downtown waterfront. This development is concurrently under review as USE2019 0021.

Because the leasing arrangements for the two buildings are not final, the applicant has provided two scenarios for building usage, Option A and Option B. The parking requirement and variance analysis is based on Option B with the highest parking requirement of 80 spaces, versus Option A which is 60 spaces. Parking requirements are listed in CBJ Code 49.40.210.

Per CBJ 49.40.210(a), the parking requirement of 80 off-street parking spaces, Option B, is based on the following calculation:

- Building A. 7,775 square feet retail (1 space/300 square feet); 7,534 square feet restaurant (1 space/200 square feet)
- Building B. 7,694 square feet retail; 7,669 square feet office (1 space/300 square feet)
- Subtotal: 114 off-street parking spaces
- Final Total: 80 off-street parking spaces, which includes a 30 percent reduction because the property is located in the PD-2 parking district (Attachment 5)

Option A with a parking requirement of 60 off-street parking spaces, which is not evaluated in this application but included for reference, is based on the following calculation:

- Building A. 7,775 square feet retail (1 space/300 square feet); 7,534 square feet storage (1 space/100 square feet)
- Building B. 7,694 square feet retail; 7,669 square feet office (1 space/300 square feet)
- Subtotal: 84 off-street parking spaces
- Final Total: 60 off-street parking spaces, which includes 30 percent reduction because the property is located in the PD-2 parking district (Attachment 5)

The applicant has also included the parking numbers for the PD-1 parking district, which allows a 60 percent parking reduction. Those numbers are 46 spaces for Option B and 34 spaces for Option A.

The parking plan must include a minimum of one loading space, and four accessible spaces as

required per CBJ 49.40.210(b) and (c). The Project Narrative and site plan includes one loading space on the southeast side of the development, and no accessible parking spaces as shown in Attachment 4.

BACKGROUND

The proposed development is concurrently under review as USE2019 0021. The USE staff report includes additional history regarding public meetings on the development and the adjacent CBJ transportation staging area and public restrooms. The CBJ facility was approved as USE201800015/CSP20180010 on November 15, 2018. The full background information is not repeated here because it is not relevant to the parking variance analysis.

ANALYSIS

In the Project Narrative, Attachment 3, the applicant has provided a number of reasons to justify the variance, including financial hardship, parking variances issued to neighboring properties, and conformance with Historic District Standards. These arguments are reviewed below, followed by a discussion of the hardship language in the Variance Criteria [CBJ 49.20.250(b)].

Neighboring Properties

The applicant has provided information on four properties in the PD-2 parking district considered to be similar to the Archipelago property, noting that in each case a variance was granted to reduce the parking requirement to the PD-1 standard. The PD-2 district allows a 30 percent parking reduction while PD-1 offers a 60 percent reduction. If the Archipelago development was granted a similar reduction to the PD-2 standard, the parking requirement would be 46 off-street parking spaces instead of 80. To be clear, this is the number based on Option A with the highest parking requirement, since final lease arrangements are unknown at this time.

The applicant has also explained that, while some customers and employees may arrive by bus, taxi, or ride-share, most of the customers and employees associated with retail establishments in this vicinity arrive by foot; these arguments have been used as justification for variances in the past. The applicant argues that the Archipelago Center's nearest competitors will be similar retail businesses that did not have to provide parking when they were built.

Staff notes that these variances were granted before the variance criteria were substantially revised in the CBJ Land Use Code in 2018. The existing non-administrative variance ordinance states that the property must have unusual or special conditions existing on the property, and that these conditions may not be created nor caused by the person seeking the variance. Furthermore, the variance goes with the land, not the use.

Because the criteria have changed, staff has not researched these cases in entirety. It appears that in the variances granted throughout the mid-1990s to the early 2000s that staff reviewed, the applicants were frequently granted approval to reduce the parking requirement from the PD-2 standard to the PD-1 standard. (Records do not indicate variances of this type in recent years.) The Board of Adjustment's decisions gave consideration of the following alternatives or mitigation to off-street parking requirements including:

- Extend the distance that off-street parking could be created to a distance greater than 500 feet (500 feet is the current distance permitted);
- Share loading spaces with adjacent property;
- Provide shuttle service for employees;
- Provide on-site covered and secured bicycle storage;
- Require early morning deliveries; and
- If in the future a fee-in-lieu option became available, CBJ was authorized in at least one variance to have the applicant participate in the program (VAR2006-00031 approved September 27, 2006). Staff notes that the Downtown Fee-in-Lieu of Parking District Map was adopted October 30, 2006.

The applicant states that requiring 46 off-street spaces under the PD-1 standard is also impractical, and would negatively impact the character of the Historic District and its pedestrian orientation. The Historic District extends into the first 40 feet of the property from the sidewalk. Historic District Standards and Guidelines (04 CBJAC 080) will be addressed in a later section.

Financial Hardship

Fee-in-lieu of parking is an option in both the PD-1 and PD-2 Parking Districts. The current fee-in-lieu rate is $10,805 for a commercial parking space. The established parking requirement of 80 spaces could therefore be addressed with an $864,400 fee-in-lieu payment. At the PD-1 adjustment to 46 off-street spaces, this figure would be $497,030.

The applicant states that this option is "onerous and discriminatory." The applicant, however, has not reviewed options for reducing the size of the buildings, or reconfiguring the shape of the buildings, to allow for any number of off-street parking spaces. Such options could allow some level of accommodation for the parking requirement. For example, if the applicant accommodated 10 off-street parking spaces on site, the fee-in-lieu payment would be reduced to $756,350, or $388,980 if the PD-1 adjustment was used. The applicant has not offered any site plan adjustments to address parking requirements or to reduce fee-in-lieu payments. The Variance criteria interpretation of hardship will be addressed in the final section of the analysis.

Other Options Considered

The applicant describes other options in the Project Narrative. CBJ Code allows parking

requirements to be met on off-site locations within 500 feet of the site. According to the applicant, no off-site locations are available for the Archipelago development. The applicant also notes that shuttle services to other off-site locations have been previously approved. The applicant questions whether those shuttle services are currently operating. Again, staff has not researched those developments because the information is not relevant to the current Variance criteria. As previously noted, the applicant has not reviewed options for reducing the size of the buildings, or reconfiguring the site layout, to allow any off-street parking spaces. The Variance request is for zero off-street parking spaces, except for the loading zone.

The applicant has also argued that, because the property does not directly abut the shoreline (a section of CBJ property follows the western edge along the waterfront), the site is improperly zoned Waterfront Commercial, should be part of the MU (Mixed Use) zoning district instead, and therefore should be regulated differently. The applicant states that the special condition of the property is the Waterfront Commercial zoning in the Mixed Use environment.

Pre-application notes from the Conditional Use Permit show that the applicant considered applying for a re-zone of the property to address this concern, but did not complete the rezone application in either the July or January application periods. The parking requirements for Mixed Use and Waterfront Commercial, however, are the same; CBJ Code 49.40.210 does not distinguish between zoning districts, only use.

Downtown Historic District Standards and Guidelines

The applicant cites the expectation to comply with Downtown Historic District Standards and Guidelines as an impediment to compliance with parking standards, and specifically states that the parking requirement is inconsistent with Historic District standards. Historic District standards, however, do not include parking requirements, only recommendations and guidelines regarding placement and screening. These recommendations are noted in Chapter 7, Design Guidelines for New Construction. The guidelines recommend that development should "*maintain the alignment of buildings at the sidewalk edge and that street facades should span lot widths.*" Chapter 9, Design Guidelines for Parking Facilities, further states that "surface parking should be located in the interior of a block whenever possible" and recommends a visual buffer where surface lots abut sidewalks. Again, these are guidelines and do not supersede the specific requirements of the CBJ Land Use Code.

The site plan and the applicant's Conditional Use Permit Project Narrative demonstrate that the applicant has followed these setback guidelines only when possible, as shown with the zero foot front setback for Building B. The front setback for Building A, as well as the side yard setbacks and rear-yard setback, all follow the Waterfront Commercial setback requirements of 10 feet.

The Downtown Historic District Standards and Guidelines are not unique to the subject property. Historic District standards are recommendations and not requirements. Finally, the applicant has

not followed these standards except for the Building B zero-foot front setback.

Hazard Designations

The flood zone map in Attachment 8 indicates that the property is adjacent to a Velocity flood zone, but not located within one. A small portion of the development is located seaward of the mean high water line. FEMA and CBJ regulations (CBJ 49.70.400) prohibit habitable development seaward of the mean high water line, using the FEMA definition of development. This restriction prohibits development on a small area of the property estimated by the applicant to be 759 square feet. Furthermore, most, if not all, of this area lies within the 10-foot rear yard setback where structures are already prohibited. While a full survey of the mean high water line is not available for all downtown properties, it is reasonable to assume that the mean high water line extends at least partially into most waterfront (and waterfront adjacent) properties in some amount. This restriction is therefore not unusual, and in this particular situation affects only a small portion of the property.

In addition, the property was originally located within a Moderate Hazard Zone. Development in Moderate Hazard zones come with additional development restrictions, due to the risk to life and safety from landslides and avalanches. This designation, however, was eliminated through the Hazard Map amendment process (case AME2018 0010 with a Notice of Decision issued on August 14, 2018, Attachment 9.)

Non-Administrative Variance Criteria on Hardship [CBJ 49.20.250(b)]

A Variance is an allowance to violate a law. A Variance excuses a landowner from having to comply with zoning regulations that other landowners in the same zoning district must abide by. The Variance criteria emphasize that the deviation from code requirements must be based on undue hardship resulting from **unusual or special conditions of the property**, and the unusual conditions must not be created by the property owner.

A hardship exists when it is unusually difficult for a landowner to comply with regulations because of the peculiarity of the property. In order to justify granting a variance, an undue hardship must first be found to exist, and secondly the variance must be narrowly tailored to relieve that hardship and nothing more.

The proposed development is located on a flat lot of 33,875 square feet within the Waterfront Commercial zoning district. The development meets the lot width and lot depth requirements for the district, and greatly exceeds the minimum lot size of 2,000 square feet. The lot was created in 2019 as shown in Attachment 7. As described previously, the lot is not within any hazard zones and has no remarkable features.

Financial hardship is not considered an undue hardship in this case because it is not tied to

unusual or special conditions of the property. The variance is focused on the land and its physical features because a variance runs with the land.

In addition, no evidence indicates that the applicant has tailored the variance to relieve the stated financial hardship. The applicant has not adjusted the building size or configuration to provide any parking on-site, nor has the applicant offered any fee-in-lieu payment to cover any number of parking spaces. This presumes that the fee-in-lieu option of paying for one parking space at $10,805 is considered a financial hardship, as well as the fee of $864,400 to compensate for all spaces, or $497,030 spaces at the PD-1 parking reduction of 60 percent.

Variance Criteria on Public Health, Safety, and Welfare

The variance criteria require a determination of whether the Variance will be detrimental to the public health, safety, and welfare.

The PD-2 Parking District, with its 30 percent reduction in the off-street parking requirement, is an acknowledgment that developments in these areas are served by employees who are likely to live downtown, and used by customers who primarily arrive by cruise ships. The adjacent PD-1 Parking District, with a 60 percent reduction in the off-street parking requirement, follows this same rationale to a greater degree.

The applicant has made the argument, without supporting evidence, that its employees and customers arrive by foot or by transit. This argument for a reduction in the parking requirement, however, has already been addressed in the PD-2 Parking District requirements.

Fee-in-lieu of parking payments, currently at $10,805 per commercial space, support parking infrastructure and transit improvements to both provide for more parking and to reduce the demand for it. The applicant has not offered a fee-in-lieu payment of any amount to offset potential impacts.

Parking lots on the waterfront may have detrimental aesthetic effects without adequate visual screening. Parking lots also discourage alternative transit methods for customers and employees and may add to congestion. At the same time, many residents and businesses perceive downtown Juneau to have a significant parking problem. Downtown residents complain of summer tourist employees parking in their neighborhoods, while businesses complain of inadequate parking for their stores. The 2013 Juneau Comprehensive Plan contains both policies that promote additional off-street parking as well as policies that promote pedestrian movement and discourage parking expansion.

The proposed variance to zero parking is likely to have some detrimental impact in neighborhoods by pushing employees and customers to park in surrounding areas. The applicant states that variances granted (under the previous ordinance) justified the reduction from the PD-

2 standard to the PD-1 standard by allowing the applicants to shuttle employees, or by assuming that customers would be pedestrians. Such mitigation has proven difficult to enforce, and CBJ cannot mandate that customers and employees arrive by foot. A lesser variance, which reduces the parking standard but does not eliminate the requirement (for example, PD-2 to PD-1), combined with fee-in-lieu payment may offset this impact. As proposed with zero parking, the variance may be detrimental to public welfare and may negatively impact surrounding properties.

AGENCY AND PUBLIC COMMENT

No agency comments were received on the Variance during the agency review period conducted from October 14 to October 30, 2019.

One public comment has been recent to date, from a resident opposed to the variance (Attachment 10). The resident states this his family and friends avoid downtown during the tourist season because of the lack of street parking.

VARIANCE REQUIREMENTS

Pursuant to CBJ 49.20.200, a variance may be granted to provide an applicant relief from the requirements of this title. A variance is prohibited from varying any requirement or regulation of this title concerning the use of land or structures, housing density, lot area, requirements in chapter 49.35, or requirements in chapter 49.65.

A non-administrative variance may be granted to provide an applicant relief from requirements of this title after the prescribed hearing and after the Board of Adjustment has determined that:

1. Enforcement of the ordinance would create an undue hardship resulting from the unusual or special conditions of the property;
2. The unusual or special conditions of the property are not caused by the person seeking the variance;
3. The grant of the variance is not detrimental to public health, safety, or welfare; and
4. The grant of the variance is narrowly tailored to relieve the hardship.

Pursuant to CBJ 49.20.260, the board may attach to a variance conditions regarding the location, character, and other features of the proposed structures or uses as it finds necessary to carry out the intent of this title and to protect the public interest.

FINDINGS

1. Is the application for the requested variance complete?

Yes. Staff finds the application contains the information necessary to conduct full review of the proposed operations. The application submittal by the applicant, including the appropriate fees, substantially conforms to the requirements of CBJ Chapter 49.15.

Criterion 1 is met.

2. Does the variance as requested, meet the criteria of Section 49.20.250, Grounds for Variances?

a. Enforcement of the ordinance would create an undue hardship resulting from the unusual or special conditions of the property;

No. Based on the preceding analysis, no evidence indicates that enforcement of the ordinance would create an undue hardship resulting from the unusual or special conditions of the property. The property is a flat waterfront lot that meets and exceeds minimum dimensional standards for the Waterfront Commercial zoning district. There are no unusual or special conditions on the property, therefore there are no undue hardships resulting from these conditions.

Criterion 2A is not met.

b. The unusual or special conditions of the property are not caused by the person seeking the variance;

No. As noted previously, there are no unusual or special conditions on the property. Further, the property is located in the PD-2 Parking District and Fee-in-Lieu Parking District, which offer relaxation of the off-street parking requirements.

Criterion 2B is not met.

c. The grant of the variance is not detrimental to public health, safety, or welfare; and

No. Based on the preceding analysis, a grant of the variance for a zero parking requirement, combined with no fee-in-lieu requirement or other type of parking mitigation, may be detrimental to the public health, safety, or welfare by pushing employees or customers of the

development to park in surrounding neighborhoods.

Criterion 2C is not met.

d. The grant of the variance is narrowly tailored to relieve the hardship.

No. There is no hardship resulting from usual or special conditions on the property. Furthermore, as described in the preceding analysis, the proposed variance is a request to reduce the parking requirement to zero and is therefore not narrowly tailored to relieve any hardship.

Criterion 2D is not met.

RECOMMENDATION

Staff recommends that the Board of Adjustment adopt the Director's analysis and findings and deny the requested variance, VAR2019 0005. If the Board elects to amend the findings and approve the requested variance, the variance would allow a reduction of the off-street parking requirement to zero in association with USE2019 0021, a proposed two (2) two-story commercial mixed-use development

City & Borough of Juneau
Alaska's Capital City

BUILDING PERMIT

Permit No.
BLD20190145

* NOTE: "Building Permit" is a generic term which includes Building Safety Inspection, Grading Permits, and permits for Electrical, Plumbing and Mechanical work.

Your special attention is called to the following:

This permit is granted on the express conditions that the construction shall, in all respects, conform to the ordinances of the City and Borough of Juneau. It may be revoked at any time upon violation of any of said ordinances.

The granting of this permit does not authorize the violation of any federal, state or local law regulating construction for the violation of the terms of any deed or covenent or any zoning or other regulation.

If plan review was required, this permit must be attached to the approved drawings. The permit, plans and record of inspections must be available on site at all times while the construction is in progress and before final inspection.

The yellow posting notice must be prominently displayed to show a permit has been issued and to assist the inspectors in location of the project. This permit becomes null and void if work or construction authorized is not commenced within one year or if work or construction is suspended or abandoned for a period of one year at any time after work has commenced.

Note: City Ordinances REQUIRE a Final Inspection be approved for every Building Permit.

Inspections

Inspections can be arranged by telephoning **586-1703** or by written or faxed notification.
The Online Building Inspection Request Form is at: **www.juneau.org/permits/inspect_request.php.**
Work shall not proceed until the inspector has approved the various stages of construction. An approved Final Inspection is required.
Call before 7:00 AM for same day inspections.
Please provide the following information: 1 Permit Number, 2 Address, 3 Type of Inspection, 4 Date and Time and 5 Contact Name and Phone Number.

Job Address: **356 S FRANKLIN ST**
Permit Number: **BLD20190145**
Project Description: Grading permit

Issued Date : **04/12/2019**
Parcel No: **1C070K830036**

Parcel Information : ARCHIPELAGO LT 1

Setbacks: Zone: WC:
Front: 10.00 Ft. NE
Rear: 10.00 Ft. SW
Street Side: 10.00 Ft.
Side 1: 10.00 Ft. NW
Side 2: 10.00 Ft. SE

Comments:

Owner : ARCHIPELAGO PROPERTIES LLC
ATTN TAX DEPT
725 BROAD ST
AUGUSTA GA 30901

Applicant : TRUCANO CONSTRUCTION
3560 N DOUGLAS HWY
JUNEAU AK 99801

Fee Type	Date	Receipt	Amount Paid
BLD- Grading Plan Review	04/04/2019	56285	$54.00
BLD- Grading Permit Fee	04/04/2019	56285	$68.50
		Total Fees Paid:	$122.50

Valuation for Permit Fee Calculations:

S.F.	Type	Rate	Amount
		Total Valuation:	$0.00

Project Conditions and Holds:

Special Condition - All utilities within the private property shall be located by the land owner and or the private contractor, and shall be the responsibilty of the land owner.

Custom - NO fill is permitted within the VE flood zone.

Inspections Required: Call for inspection before covering or concealing any of the work described below. Inspections may be combined.
E-Grading/Drainage
E-General Engineering Final

JUNEAU PERMIT CENTER - 230 S. Franklin Street - 4th Floor, Marine View Center - Mail: 155 S. Seward Street, Juneau, AK 99801
Phone: 586-0770 - FAX: 586-3365 - Inspection Requests: 586-1703 - Email: permits@ci.juneau.ak.us
Web Site: www.juneau.org/permits

Staff Review Sheet

Permit Intake Initials: AS

FIRE ZONE ENG WAT SEW ARCH STRUC PLUM MECH ELEC ACCESS SPECINSP

Planner LEB

4/4/2019

Case No: **BLD20190145**

Site Address: 356 S FRANKLIN ST

Parcel No: 1C070K830036

Desc: Grading permit

Commercial GRD

FCC Code: ?

Type of Construction: ____

New Dwelling Units: 0

Existing Dwelling Units: 0

Occupancy Class: ____

Sprinkler Substitute for Type A Construction: YES NO

Sprinkler System: FULL PARTIAL NONE Required: YES NO

Alarm System: FULL PARTIAL NONE Required: YES NO

Code Edition: ____ Code Review by: ____ Date: ____

Valuation for Permit Fee Calculations:

S.F.	Type	Rate	Amount

Total Valuation: $0.00

LAND USE

ZONE/UNITS WC /

WETLAND

FLOOD ELEV 25.00

FIRM ZONE VE Bach 1/2 of lot

FIRM MAP

LOT SIZE 43,508 SF

1.0 ACRES

SETBACKS

Front 10 NE

Rear 10 SW

Side 10 NW/SE

Other

PARKING

ANADROMOUS

EAGLES NEST

Coverage ____ Permissible/Conditional

HEIGHT ____ Permissible/Accessory

VEGETATION

HAZARD

ENGINEERING/PUB WORKS

Dwelling Units: ____

CITY WATER:

Permit #: ____

Use: ____

Assessment: ____

Service Size: ____

Line Size: ____

Meter Size: ____

CITY SEWER:

Permit #: ____

Use: ____

Assessment: ____

Fixture Units: ____

LAND USE PERMITS

ADR Case #: ____

PLAN REVIEW APPROVALS

	Initials	Date
__ Fire		
__ Zoning	LEB	4/12/19
__ Engineering	MAM	4/8/19
__ Water		
__ Sewer		
__ Architectural		
__ Structural		
__ Plumbing		
__ Mechanical		
__ Electrical		
__ Access		
__ Spcl Insp Form		

APPROVED FOR ISSUANCE

Signature

4/12/19

Date

PERMIT ISSUANCE FEES

__ Grading Plan Review Fee $____

__ Adjusted Plan Review Fee $____

__ Fast Track Fee $____

__ Early Start Fee $____

__ Building Permit Fee $____

__ Water Assessment Fee $____

__ Sewer Assessment Fee $____

__ Sewer Inspection Fee $____

__ Grading Permit Fee $____

__ Driveway Permit Fee $____

__ Bond for ____ $____

__ Other ____ $____

Total Issuance Fees $____

PERMIT ISSUANCE PAYMENTS

Date	Receipt	Check	Amount
			$
			$
			$

Parcel Tags:

5/2/16 TJF - VAR2011-0004 allows 0ft setback on NW property line for food carts.

CONDITIONS AND HOLDS ON PERMIT: (Continued on back of sheet)

NO Fill is permitted within the VE Flood zone.

BUILDING PERMIT APPLICATION (Continued)

TYPES OF INSPECTIONS

The Work Codes below contain standard inspections for the permit type. Circle additional inspections if required.

Work Codes -
B-Building Safety Inspection
B-Commercial Addition
B-Demolition
B-Grading
B-Manufactured Home Placement
B-Oil/Gas Piping
B-Porches/Decks/Carports
B-Reroof
B-Residential Electrical Service
B-Single Family Dwelling
E-ROW- Water & Sewer Service
E-ROW- Water Main
E-ROW-Driveway
E-ROW-Fire Line
E-ROW-Sewer Main
E-ROW-Sewer Main & Service
E-ROW-Sewer Service
E-ROW-Water Main & Service
E-ROW-Water Main & Sewer Main
E-ROW-Water Service
E-UTL- Sewer Main
E-UTL-Fire Line
E-UTL-Fire Line & Water Line
E-UTL-Fire Line & Water Main
E-UTL-OWTDS
E-UTL-Sewer Line
E-UTL-Pressure Sewer Line
E-UTL-Sewer Line w/ Decomm
E-UTL-Pressure Sewer Line w/Decom
E-UTL-Water Line
E-UTL-Water Main

Building-
B-Appliance/Chimney
B-Bonding
B-Building Final
B-Building Service
B-Combustion Air
B-Commercial Hoods
B-Conduit & Raceway Systems
B-Cross Connection Control
B-Demo Electric Safed Off
B-Demo Excavation Filled
B-Demo Sewer/Water Capped
B-Demolition Final
B-Devices and Equipment
B-Electrical Final
B-Fire Dampers/Sprinklers
B-Fire Separation/Rated Assemb
B-Foundation, Forms & Reinf Steel
B-Framing
B-Grounding
B-Heat Piping
B-Insulation/Vapor Barrier
B-Masonry
B-Mechanical Final
B-Meter Yoke
B-Meter Yoke with Meter
B-MH Foundation
B-MH Utilities
B-Mobile Home Final
B-Plumbing Final
B-Oil & Gas Piping/Tanks
B-Rough Electrical
B-Rough Plumbing
B-Service/Panel
B-Setback Verification
B-Smoke/Carbon Monoxide Detec
B-Special Inspection
B-Specialty Piping
B-Temporary Power
B-Under Slab Utilities
B-Ventilation/Plenums & Ducts
B-Vents (Bath, Dryer, Kitchen, etc.)
B-Yellow Tag Electrical
B-Zoning Final

Enforcement -
ENF - Enforcement Status Check

Miscellaneous -
M-Site Visit

Fire -
F-Address and Required Signage
F-Alarm Panel/Transmitter
F-Alarm Zones
F-Blasting on Individual Lot
F-Childcare/Daycare Inspection
F-Commercial Dev Land Clearing
F-Courtesy Inspection
F-Emergency Lighting Test
F-Events in Mall Hallways
F-Explosives Shipment-Unest Loc
F-FDC Location
F-Fire Extinguishers
F-Fire Final
F-Fire Hydrant Placement
F-Fire Related Inspection
F-Fixed Welding Inspection
F-Flammable/Combustible Material
F-Hazardous Material Storage
F-Kitchen Hood Suppression Test
F-Liquor License Renewal
F-Open Burning Inspection
F-Paint Booth Inspection
F-Proper Sprinkler System Bracing
F-Roof/Tar Kettle Inspection
F-Special Event Structure
F-Sprinkler Head Placement
F-Sprinkler Hydrostatic Test
F-Subdivision Land Clearing
F-Subdivision/Road Blasting
F-System Acceptance Test
F-Temporary Welding Inspection
F-Underground Fire Line Flush

Engineering -
E-Access to Curb Stop Valve
E-ADEC on-site Sewer Final
E-ADEC on-site Water Main Final
E-Asbuilt Survey Required
E-Bacteriological Test
E-Bedding / Backfill
E-Billing Authorization
E-Blasting Verification
E-Bore Flush
E-CBJ Waste Water Department
E-CBJ Water Department
E-Chlorination Test
E-Cleanouts
E-Continuity
E-Cross Connection Control
E-Culvert
E-Curb Box
E-Curb Cut Final
E-Curb Cut Reinforcement
E-Curb Stop
E-Depth
E-Electrical Utility
E-Final
E-Fire Hydrants
E-Fire Line Final
E-General Engineering Final
E-Grade
E-Grading/Drainage
E-Headwalls
E-Installation of Access & Ports
E-Installation of Insulation
E-Location
E-Manhole Tap
E-Manholes - Sewer Main
E-Material
E-OWTDS Inspection
E-Pressure Test
E-Pump Ticket
E-Residual / Free Chlorine
E-Retaining Walls
E-ROW - Final
E-ROW Restoration
E-Septic Decommission
E-Sewer Connection
E-Sewer Disconnect
E-Sewer Final
E-Sewer Main Final
E-Sewer Service Tap
E-Sewer System
E-Sidewalk Final
E-Sidewalk Reinforcement
E-Size
E-Soil
E-State D.O.T. Approval
E-Storm Drains
E-Street Patch
E-Streets
E-Telephone Utility
E-Thaw Waiver
E-Thaw Wire
E-Thrust Blocks
E-Turn Water OFF
E-Turn Water ON
E-TV Cable
E-Utility Ribbon
E-Utility Trench
E-Water Final
E-Water Meter Required
E-Water Meter/Yoke
E-Water Service Tap
E-Water System
E-Water Tap
E-Width

ADDITIONAL CONDITIONS AND HOLDS (STAFF)

City & Borough of Juneau
Alaska's Capital City

Application Date: **April 4, 2019**

BUILDING PERMIT APPLICATION

NOTE: THIS IS NOT A BUILDING PERMIT

* NOTE: "Building Permit" is a generic term which includes Building Safety Inspections, Grading Permits, and permits for Electrical, Plumbing and Mechanical work.

Case No: **BLD20190145**

Case Description: Grading permit

Site Address: **356 S FRANKLIN ST**

Parcel No: 1C070K830036

Legal Description: ARCHIPELAGO LT 1

Check No. of Existing Dwelling Units:

No. of New Dwelling Units: 0

No. of Removed Dwelling Units: 0

Applicant : TRUCANO CONSTRUCTION
3560 N DOUGLAS HWY
JUNEAU AK 99801

e-mail: trucano@alaska.com

PH1 586-2444
CEL 321-2680

Owner: ARCHIPELAGO PROPERTIES LLC
ATTN TAX DEPT
725 BROAD ST
AUGUSTA GA 30901

PH: _____ FAX _____

Contractor: TRUCANO CONSTRUCTION
3560 N DOUGLAS HWY
JUNEAU AK 99801

Valuation for Permit Fee Calculations:

S.F.	Type	Rate	Amount
	Total Valuation:		$0.00

Associated Cases:

None.

Parcel Tags:

5/2/16 TJF - VAR2011-0004 allows 0ft setback on NW property line for food carts.

Notes and Conditions:

Jeff S. — 4-4-19 — AS

Applicant's Signature (Owner, Contractor or Authorized Agent) | **Date** | Staff Acceptance

I hereby certify that I have read and examined this application and know the same to be true and correct. I further certify that all provisions of laws and ordinances governing this type of work will be complied with whether specified herein or not. I understand that the granting of a permit does not presume to give authority to violate or cancel the provisions of any other federal, state or local law regulating construction or the performance of construction.

JUNEAU PERMIT CENTER - 230 S. Franklin Street - 4th Floor, Marine View Center - Mail: 155 S. Seward Street, Juneau, AK 99801
Phone: 586-0770 - FAX: 586-3365 - Inspection Requests: 586-1703 - Email: permits@ci.juneau.ak.us
Web Page: HTTP://WWW.JUNEAU.ORG/PERMITS

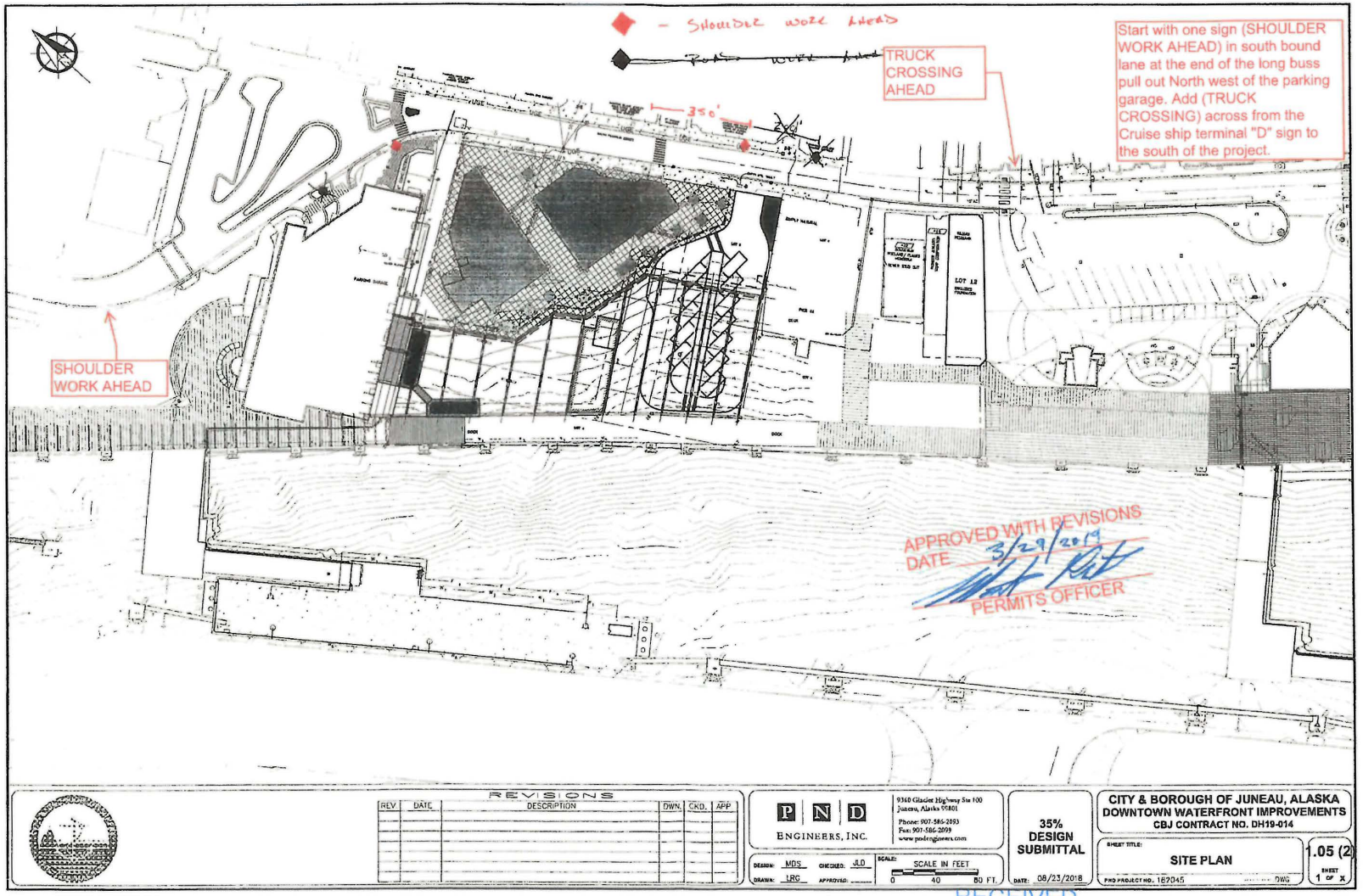

RECEIVED

APR 04 2019

PERMIT CENTER/CDD

BLD19-145

Attachment F – BLD2019-0145

Erosion Control Plan

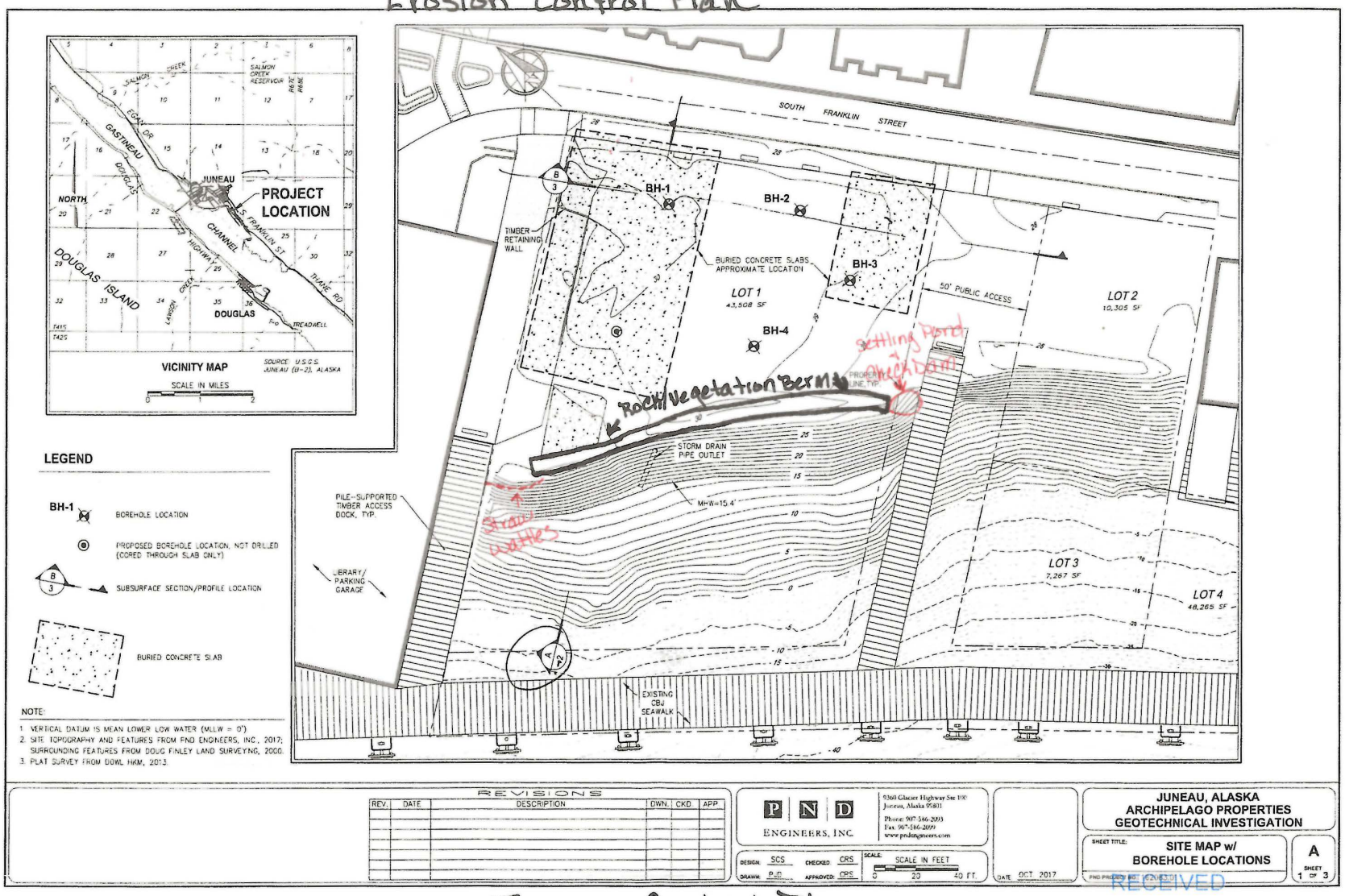

Erosion Control Plan

RECEIVED
APR 04 2019
PERMIT CENTER/CDD
BLD19-145


PANEL
02110C1567D
Eff 8/19/2013
AREA OF MINIMAL FLOOD HAZARD
Fill in
No loading
the Floodzone

CITY AND BOROUGH OF JUNEAU
ALASKA'S CAPITAL CITY
COMMUNITY DEVELOPMENT

INSPECTION REPORT

CITY & BOROUGH OF JUNEAU BUILDING DIVISION
4TH FLOOR MARINE VIEW BUILDING, 230 S. FRANKLIN ST.
MAIL: 155 SOUTH SEWARD STREET, JUNEAU, AK 99801
MAIN PHONE: 586-0770 ***INSPECTION REQUEST LINE:*** 586-1703
ONLINE INSPECTION REQUEST FORM: https://beta.juneau.org/?p=1994

PERMIT NO. _____ **DATE** _____ **TIME** _____

☐ FOOTING	☐ FRAME	☐ CROSS CONNECTION CONTROL	☐ GRADING/DRAINAGE
☐ STEM WALLS	☐ ELECTRICAL	☐ OIL & GAS PIPING/TANKS	☐ ROOF
☐ SLAB	☐ PLUMBING	☐ DRIVEWAY	☐ FINAL
☐ UNDERSLAB (Plumbing/Electrical)	☐ INSULATION	☐ WATERLINE	☐ _____
☐ TEMPORARY POWER	☐ MECHANICAL	☐ SEWER	
	☐ WOODSTOVE		

OWNER/CONTRACTOR _____

ADDRESS _____

PERMIT TYPE _____ **INSPECTION CODE** _____

☐ **CALL FOR REINSPECTION BEFORE CONCEALMENT**

☐ **CORRECTIONS OF ITEMS NOTED ABOVE WILL BE REINSPECTED AT TIME OF NEXT REQUESTED INSPECTION**

INSPECTOR: _____

I:\FORMS\BLDGFORM\Inspection Report.pub

CERTIFICATE OF LIABILITY INSURANCE

DATE (MM/DD/YYYY): 1/15/2019

THIS CERTIFICATE IS ISSUED AS A MATTER OF INFORMATION ONLY AND CONFERS NO RIGHTS UPON THE CERTIFICATE HOLDER. THIS CERTIFICATE DOES NOT AFFIRMATIVELY OR NEGATIVELY AMEND, EXTEND OR ALTER THE COVERAGE AFFORDED BY THE POLICIES BELOW. THIS CERTIFICATE OF INSURANCE DOES NOT CONSTITUTE A CONTRACT BETWEEN THE ISSUING INSURER(S), AUTHORIZED REPRESENTATIVE OR PRODUCER, AND THE CERTIFICATE HOLDER.

IMPORTANT: If the certificate holder is an ADDITIONAL INSURED, the policy(ies) must be endorsed. If SUBROGATION IS WAIVED, subject to the terms and conditions of the policy, certain policies may require an endorsement. A statement on this certificate does not confer rights to the certificate holder in lieu of such endorsement(s).

PRODUCER	CONTACT NAME: Debora Roberts
Shattuck and Grummett Insurance 301 Seward St. Juneau AK 99801	PHONE (A/C, No, Ext): (907)586-2414 FAX (A/C, No): (907)586-3770 E-MAIL ADDRESS: debbie@sginc.com
	INSURER(S) AFFORDING COVERAGE — NAIC #
	INSURER A: Alaska National Insurance Company
INSURED Trucano Construction Company, Inc.; Trucano Family Partnership 3560 N. Douglas Hwy. Juneau AK 99801	INSURER B: INSURER C: INSURER D: INSURER E: INSURER F:

COVERAGES — CERTIFICATE NUMBER: 19/20 GL, AU, WC — REVISION NUMBER:

THIS IS TO CERTIFY THAT THE POLICIES OF INSURANCE LISTED BELOW HAVE BEEN ISSUED TO THE INSURED NAMED ABOVE FOR THE POLICY PERIOD INDICATED. NOTWITHSTANDING ANY REQUIREMENT, TERM OR CONDITION OF ANY CONTRACT OR OTHER DOCUMENT WITH RESPECT TO WHICH THIS CERTIFICATE MAY BE ISSUED OR MAY PERTAIN, THE INSURANCE AFFORDED BY THE POLICIES DESCRIBED HEREIN IS SUBJECT TO ALL THE TERMS, EXCLUSIONS AND CONDITIONS OF SUCH POLICIES. LIMITS SHOWN MAY HAVE BEEN REDUCED BY PAID CLAIMS.

INSR LTR	TYPE OF INSURANCE	ADDL INSD	SUBR WVD	POLICY NUMBER	POLICY EFF (MM/DD/YYYY)	POLICY EXP (MM/DD/YYYY)	LIMITS	
A	COMMERCIAL GENERAL LIABILITY CLAIMS-MADE [X] OCCUR [X] Liquor Liability GEN'L AGGREGATE LIMIT APPLIES PER: [X] POLICY [ ] PRO-JECT [ ] LOC [ ] OTHER:	X	Y	19ALS03427	1/1/2019	1/1/2020	EACH OCCURRENCE DAMAGE TO RENTED PREMISES (Ea occurrence) MED EXP (Any one person) PERSONAL & ADV INJURY GENERAL AGGREGATE PRODUCTS - COMP/OP AGG $	$ 1,000,000 $ 100,000 $ 5,000 $ 1,000,000 $ 3,000,000 $ 3,000,000 $
A	AUTOMOBILE LIABILITY [X] ANY AUTO ALL OWNED AUTOS SCHEDULED AUTOS HIRED AUTOS NON-OWNED AUTOS	X	Y	19AAS03427	1/1/2019	1/1/2020	COMBINED SINGLE LIMIT (Ea accident) BODILY INJURY (Per person) BODILY INJURY (Per accident) PROPERTY DAMAGE (Per accident) $	$ 2,000,000 $ $ $ $
	UMBRELLA LIAB [ ] OCCUR EXCESS LIAB [ ] CLAIMS-MADE DED [ ] RETENTION $						EACH OCCURRENCE AGGREGATE $	$ $ $
A	WORKERS COMPENSATION AND EMPLOYERS' LIABILITY ANY PROPRIETOR/PARTNER/EXECUTIVE OFFICER/MEMBER EXCLUDED? (Mandatory in NH) Y/N [ ] N/A If yes, describe under DESCRIPTION OF OPERATIONS below	N/A	Y	19AWS03427	1/1/2019	1/1/2020	[X] PER STATUTE [ ] OTH-ER E.L. EACH ACCIDENT E.L. DISEASE - EA EMPLOYEE E.L. DISEASE - POLICY LIMIT	$ 1,000,000 $ 1,000,000 $ 1,000,000

DESCRIPTION OF OPERATIONS / LOCATIONS / VEHICLES (ACORD 101, Additional Remarks Schedule, may be attached if more space is required)

This Certificate is a representation of the named insured's coverage as of the date shown. Shattuck & Grummett Insurance makes no representation that these coverages comply with or fully satisfy any insurance or indemnity requirements in any contract, written, oral, or implied.

COPY

CERTIFICATE HOLDER

State of Alaska, D.O.T.P.F.
6860 Glacier Hwy.
Juneau, AK 99801

CANCELLATION

SHOULD ANY OF THE ABOVE DESCRIBED POLICIES BE CANCELLED BEFORE THE EXPIRATION DATE THEREOF, NOTICE WILL BE DELIVERED IN ACCORDANCE WITH THE POLICY PROVISIONS.

AUTHORIZED REPRESENTATIVE

John Grummett/DEBBIE

© 1988-2014 ACORD CORPORATION. All rights reserved.

Shoulder Work (Diagram #4)

Diagram No. 4 covers stationary (longer than 15 minutes in duration) work operations or parked equipment on the shoulder with no encroachment on the traveled way.

1. Vehicles should be parked as far off the roadway as practical.
2. It is recomended that a minimum of two signs be used regardless of posted speed.
3. Use beacon.
4. If equipment operation and activities are more than 15 feet from the edge of roadway signs and cones are not required.
5. If dust from the operation reduces the sight distance to less than 500 feet, use diagram No. 9

Roadway	A	B	C	Suggested Buffer
Urban	200	200	200	150 Ft.
Standard	500	500	500	350 ft.
Freeway	500-1000	800-1600	1300-2600	500 ft.

* Vehicles parked outside the improved shoulder with no work activity present do not require sign or cones. If less than 15 feet from the edge of roadway, cones or hazard marker is recommended.

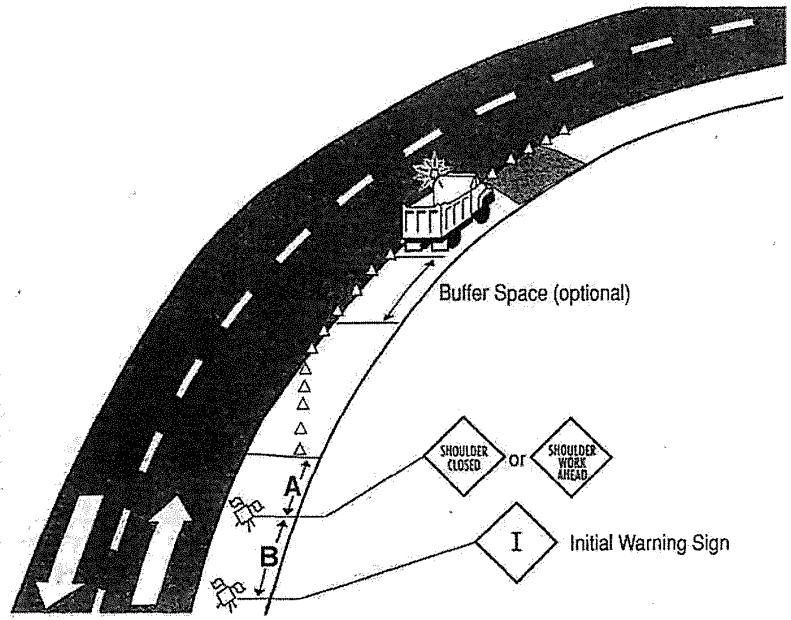

Diagram No. 4 — Shoulder Work

RECEIVED

APR 0 4 2019

PERMIT CENTER/CDD

BLD19-145

Permit No. 28964

State of Alaska

Department of Transportation and Public Facilities

Lane Closure Permit (LCP)

This permit allows the permittee to use a State owned highway Right of Way for access to, or construction and maintenance activities related to, physically contiguous land during construction, alteration, or maintenance improvements, or to allow access to utility facilities for which a permit has been issued.

Applicant:	**Trucano Construction**	
Mailing Address:	PO Box 020870	
	Juneau, AK 99802	
Contact Name:	Jeff Trucano	
E-mail Address:	trucano@alaskan.com	
Phone:	(907) 586-2444	Fax: (907) 463-3810

Traffic Control Provided by: Trucano Construction

Phone: (907) 586-2444 Fax: (907) 463-3810

24 hour Traffic Control contact person: Jeff Trucano

Phone: (907) 321-3988 Fax: _____

Permit activity location (includes all routes which will be affected):
356 South Franklin St. Juneau, AK If it is found that flaggers are needed to assist in traffic control, A Traffic Control Supervisor (TCS) with certificate of training must be on staff to oversee that work.

Reason for permit: Sidewalk removal/replacement in a DOT right of way. Trucks entering and leaving the roadway.

Start Date: 04/01/2019 End Date: 06/30/2019

Schedule details (start times, end times, days of the week, exceptions, continuous or daily operation):

Sidewalk removal/replacement will take place in the month of April, over the period of 1 week. Trucks will be making deliveries on and off for the entire duration. Working hours will be 7am - 5:30pm, Monday - Saturday.

Permittee upon signing this permit acknowledges and agrees to the following provisions:

PROVIDE EMERGENCY VEHICLE ACCESS AT ALL TIMES.

Permittee shall notify the following public agencies a minimum seven (7) days in advance: Municipal Traffic Engineer, Alaska State Troopers, Local Police, Fire Department, Emergency Medical Services, People Mover, School Bus Dispatch, Anchorage School District, and ADOT Traffic Control Engineer.

This Permit is not a property right but a temporary authorization, revocable by the State upon violation of any Permit terms. In addition, the State reserves the right to cancel this permit, for any reason, including emergencies, with advance notice. All reasonable attorney's fees and costs associated with legal or enforcement actions related to the terms and conditions of this permit will be borne by the permittee.

All signs installed in State rights of way shall be fabricated, located and installed in conformance with the Alaska Traffic Manual (ATM), Alaska Sign Design Manual (ASDS), and standard drawings and specifications. Our Traffic & Safety section shall approve all variable message signs (i.e. street name signs) prior to installation.

Implement the traffic control plan and maintain traffic control devices in accordance with the Alaska Traffic Manual and any provisions and conditions noted.

Permittee shall indemnify, defend and hold harmless the State, and its officers, employees, and contractors, from any and all claims or actions resulting from injury, death, loss, or damage sustained by any person or personal property resulting directly or indirectly from Permittee's use of or activities in the permitted area.

The Permittee will obtain all necessary Federal, State, and Municipal permits and licenses required by law, pay all taxes and special assessments lawfully imposed upon the permitted area, and pay other fees and charges assessed under applicable law.

If you damage any improvements within the state owned right of way, you will be responsible to return them to their previous condition. The Department's Maintenance and Operations section will inspect and approve the restored improvements. Improvements may include: pavement structures, sidewalks, curb and gutter, pathways, driveways, signs, traffic markings, guardrail, delineators, highway lighting systems, traffic signal systems, drainage structures and mailboxes.

If your permitted use interferes with the public's safety and/or use of facilities within State owned right of way, you will be directed to adjust or remove your traffic control.

A copy of this permit must be on site. If any of the conditions of this permit are violated, the State reserves the right to require the removal of all activities from the area.

All sign layouts shall conform to the Alaska Sign Design Specifications.

Fabricate special signs from type 8 or 9 orange fluorescent reflective sheeting on either sheet aluminum or plywood panels.

Adjust sign locations in the field to provide adequate separation from existing signs. All signs shall be visible.

Remove all traffic control devices when no longer needed.

Permittee shall clean up litter or debris generated as a result of this permit.

Obtain a letter of non-objection from the Contractor when your event crosses or parallels an active construction project. A list of active construction projects is at http://www.dot.state.ak.us and accessing the "Traveler Quicklinks" and "Construction Advisories" submenus.

Permittee upon signing this permit acknowledges and agrees to the following conditions:

An area along the work zone must be wide enough to meet ADA access specifications.

Attachments included as part of this permit are:

REQUIRED for ALL permits:

[X] Traffic Control Plan(s).
[X] Proof of Insurance
[X] Proof of Training

REQUIRED if APPLICABLE:

[X] Letter of non-objection from each impacted construction project.
[X] Permit/authorization from affected municipalities.

I, JEFF TRUCANO, acknowledge that I am acting on behalf of the above named organization with the full authority to do so. I further acknowledge and accept that TRUCANO CONSTRUCTION shall comply with all the provisions and conditions that the Department of Transportation and Public Facilities has included as a condition of issuing this permit.

Jeff [signature] — 3-29-19
Permittee Signature — Date

[signature] — 3/29/2019
DOT&PF Signature — Date

The American Traffic Safety Services Association

Hereby recognizes that

Jeff Trucano

has attended

Traffic Control Supervisor

Training Course

02/11/2015
Date

Juneau, AK
Location

Donna M. Clarke
Training & Products Dept. Director

Ryan A. Wantz
President, CEO

ATSSA
SAFER ROADS SAVE LIVES

The American Traffic Safety Services Association

Hereby recognizes that

Jeff Trucano

has attended

Traffic Control Technician

Training Course

02/09/2015
Date

Juneau, AK
Location

Donna M. Clarke
Training & Products Dept. Director

Ryan A. Wantz
President, CEO

ATSSA
SAFER ROADS SAVE LIVES

PERMITS@JUNEAU.ORG

City & Borough of Juneau
Alaska's Capital City

Grading Permit Checklist

JUNEAU PERMIT CENTER, 4TH FLOOR MARINE VIEW CENTER, (907) 586-0770

All grading must conform with CBJ Title 19.12, Excavation and Grading.

Section I: **Case Number:** BLD20190145

Applicant's Name TRUCANO CONSTRUCTION
Mailing Address 3560 NORTH DOUGLAS HWY JUNEAU, AK 99801
Phone Number (907) 586-2444
Project Address 356 S. FRANKLIN STREET
Project Parcel Number 1C070K830036

Section II:

GRADING PLAN REQUIREMENTS

Grading permit applications must be accompanied by a drawing which graphically shows the grading site and the proposed grading changes. The plan shall show the following features:

- ☐ A. Name, address and phone number of applicant
- ☐ B. Lot number, legal description, and street address of grading site
- ☐ C. Lot boundary lines
- ☐ D. Buildings (existing and proposed)
- ☐ E. All easements affecting lot
- ☐ F. Location of driveway, including width and size of culvert
- ☐ G. Streams, ditches, swales and all other drainage features including locations where drainage leaves the grading site. (PLAN SHALL SHOW ALL DRAINAGE FLOWING INTO AN APPROVED DRAINAGE WAY)
- ☐ H. Location of underground utilities (water, sewer, phone, power, tv)
- ☐ I. Limits of all proposed cuts and fills
- ☐ J. Elevations and dimensions of proposed grading and buildings
- ☐ K. All structures within 15 feet of the boundaries of the site
- ☐ L. Survey of existing terrain shown with, elevations, cross sections or contours

The Building Official may require a more detailed plan and/or survey by licensed professionals for grading on sites with steep slopes, large excavations or fills (greater than 5,000 cubic yards), or for structural fills.

RECEIVED
APR 04 2019
PERMIT CENTER/CDD

Section III:

Will there be excavation activity? ☒ YES ☐ NO

How many cubic yards? 2,000 Cubic Yards

What type of material will be excavated? CONCRETE

Will excavated material be removed from the site? ☒ YES ☐ NO

How many cubic yards of material will be removed? 2,000 Cubic Yards

What is the location of the disposal site? 2571 CHANNEL DRIVE

Has a permit been obtained for the disposal site? ☒ YES ☐ NO

Will fill be brought on to site? ☒ YES ☐ NO

How many cubic yards? 2000 Cubic Yards

What type of material? 4" MINUS SHOT ROCK

From where will the material be obtained? AJC / JUGS CRUSHING

Will stumps need to be removed? ☐ YES ☒ NO

Describe method of disposal: _____

Will erosion protection be required? ☒ YES ☐ NO

Describe method: SEE ATTACHED EROSION CONTROL PLAN

Will a retaining wall be required to hold the cut or fill? ☐ YES ☒ NO

(Note: Walls four feet or greater in height must be designed by a professional engineer licensed in the State of Alaska.)

NOTE: DURING ~~WHITE~~ UTILITY LOCATES, ACS TOLD ME THERE IS A FIBER OPTIC LINE RUNNING TO THE DOWNTOWN LIBRARY. THIS IS A CBJ OWNED LINE THEY ARE UNWILLING TO LOCATE. IS THERE AN ASBUILT THAT SHOWS IT'S LOCATION AVAILABLE?

Section IIII:

Has a grading plan been stapled to this checklist? (Note: See Grading Plan Requirements on the back of this page.)	YES	NO
If a driveway is to be constructed to a State of Alaska Department of Transportation right-of-way, attach a copy of the ADOT driveway permit. (Note: Glacier Highway, Mendenhall Loop Road, and other major arterial roads in the CBJ are ADOT rights-of-way.) Are ADOT permits required and attached to this checklist?	YES	NO
If grading project will require a well or on-site sanitary sewer disposal, permits from the State of Alaska Department of Environmental Conservation are required. Are ADEC permits required and attached to this checklist?	YES	NO
CBJ Land Use Code may require a Conditional Use Permit be issued by the Planning Commission for Sand and Gravel Extraction. Please respond to the following questions in order to determine if the extraction is exempt from a planning permit.		
Is the extraction a necessary incident to work authorized under a valid building permit for a proposed permitted use?	YES	NO
Has a building permit been issued for the proposed permitted use?	YES	NO
Is the extraction a necessary incident to improvements which are part of an approved subdivision plat?	YES	NO
If associated with subdivision improvement, will the material excavated remain entirely on the property or original tract or parcel subdivided?	YES	NO
Is the extraction less than two feet in depth and not creating a slope greater than five feet in height or steeper than one and one-half horizontal to one vertical?	YES	NO
Does the extraction involve the removal of less than two hundred cubic yards from the lot?	YES	NO
Is the extraction a necessary incident to the location or placement of work located primarily in the public way which is exempt from the building code?	YES	NO
Is the extraction for cemetery graves, excavations for wells or tunnels, utilities or exploratory excavation totaling less than two hundred cubic yards?	YES	NO

A NO answer to one or more of the questions A through H above may indicate that a Conditional Use Permit is required.

⇒ **See Example Grading Plan. Required features are shown on example plan by encircled letters which correspond to the above list.**

1. All grading must conform with CBJ Title 19.12, Excavation and Grading. (Note: Grading activity shall comply with grading setbacks.)
2. Prior to placing fill, all organic material and overburden must be removed.
3. Stumps shall be disposed of in an approved manner.
4. If fill or excavation has the potential to endanger adjoining property, the Building Official may require a soils engineering report.
5. If drainage is modified, the site plan must show no additional drainage impact on adjoining properties.
6. All retaining walls shall be shown on the grading plan, and with a detail which shows the wall's construction. Walls four feet in height or grater must be designed by a professional engineer licensed in the State of Alaska.
7. Some projects on steep slopes will require a HILLSIDE DEVELOPMENT PERMIT as defined in section 49.70 of the municipal code. For information, contact the CBJ Community Development Department at 586-0770.
8. Fills placed on existing slopes between 5:1 and 2:1 shall be benched to minimize slippage.
9. Fills placed on slopes steeper than 2:1 must be placed in accordance with an approved soil engineer's or geologists plan or report.
10. Fills to be used to support structures must be placed in accordance with an approved plan and soils report prepared and submitted by a civil or soils engineer licensed in the State of Alaska.

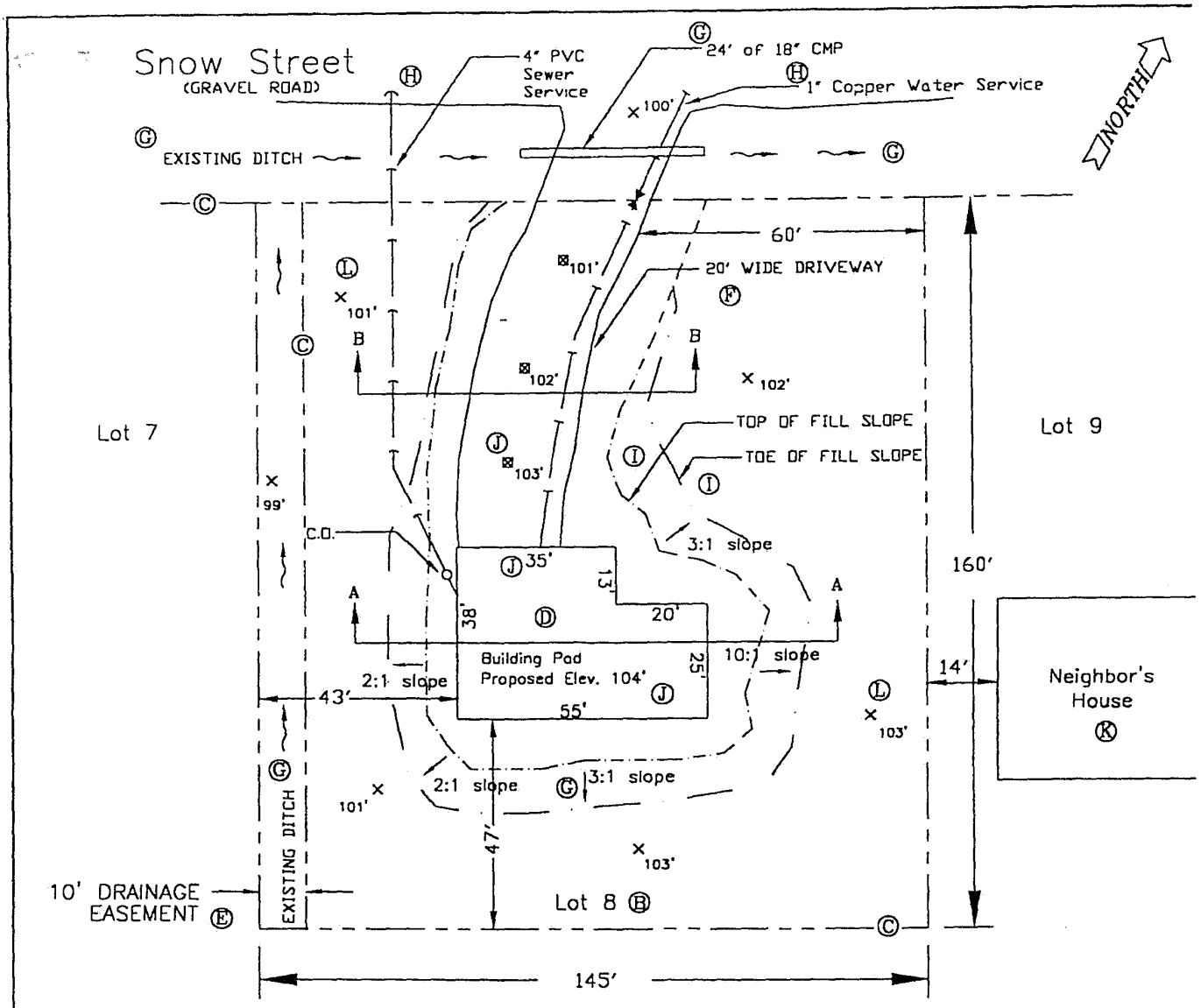

Example Grading Plan

Page 1 of 2

(Applicant shall attach own plan to grading permit application)

Key

$\times_{103'}$	Existing Elevation	Ⓛ
$\boxtimes_{103'}$	Proposed Elevation	Ⓙ
– – – –	Legal Boundary	Ⓒ
– · – · –	Top of Fill Slope	Ⓘ
— —	Toe of Fill Slope	Ⓘ
~→	Direction of Flow	Ⓖ
——→	Sewer Line	Ⓗ
——⊣	Water Line	Ⓗ

Notes:

1. Phone, Power, and TV lines are aerial. Ⓗ
2. Basis of elvevations is the center of the driveway at the intersection of the road. Ⓙ

Ⓐ Permit Applicant's Contact Information:

Jane Propertyowner
526 Fifteenth Street
Douglas, AK 99824
364–9999

Ⓑ Grading Site

Lot 8, Block B
Sleepy Subdivision
Snow Street
(No mail address assigned yet)

Form Date: January 22, 1996

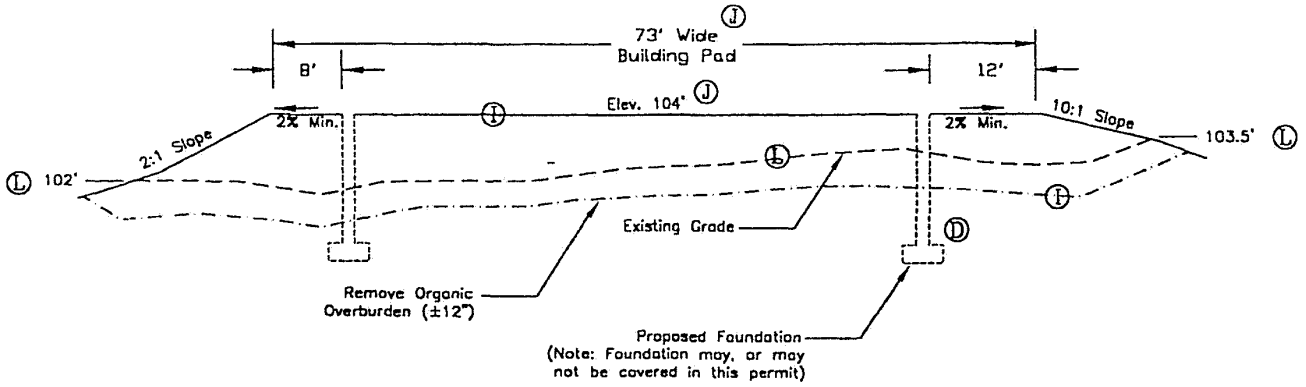

Section A–A

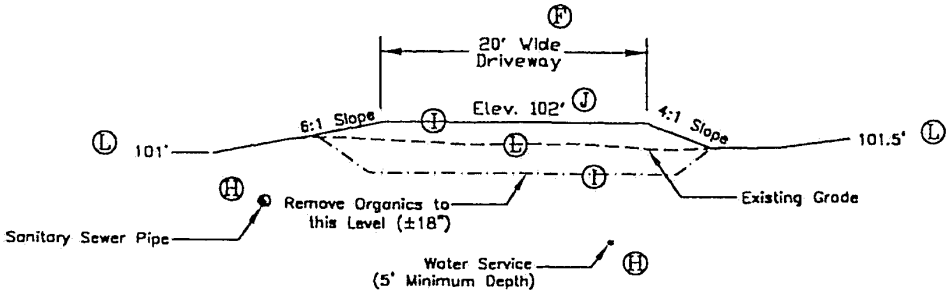

Section B–B

Example Grading Plan

Page 2 of 2

(Applicant shall attach own plan to grading permit application)

Ⓐ

Permit Applicant's
Contact Information:

Jane Propertyowner
526 Fifteenth Street
Douglas, AK 99824
364–9999

Ⓑ

Grading Site

Lot 8, Block B
Sleepy Subdivision
Snow Street
(No mail address assigned yet)

Form Date: January 22, 1996

File Copy -

ARCHIPELAGO PROPERTIES, LLC.
FOUNDATIONS DEMOLITION



VICINITY

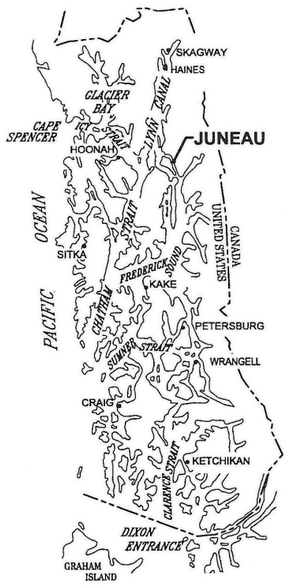

SOUTHEAST ALASKA

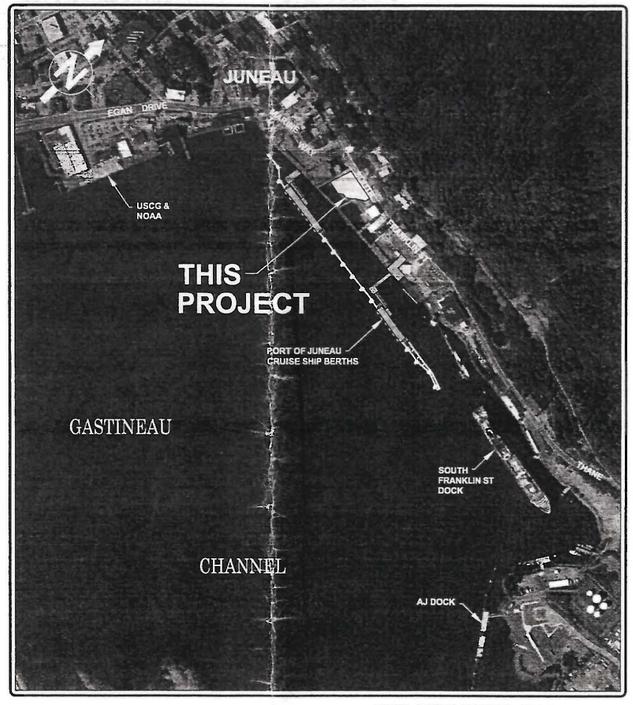

AERIAL PHOTO MODIFIED FROM:
CITY AND BOROUGH OF JUNEAU, 2006

VICINITY MAP

SCALE IN FEET
0 500 1000 FT.

TIDAL DATA

SOURCE: NOAA NOS/CO-OPS STATION ID: 9452210
JUNEAU, ALASKA 2/6/18

DESCRIPTION	ELEV. (FT.)
HIGHEST OBSERVED WATER LEVEL	+24.58
MEAN HIGHER HIGH WATER (MHHW)	+16.30
MEAN HIGH WATER (MHW)	+15.34
MEAN SEA LEVEL (MSL)	+8.58
MEAN TIDE LEVEL (MTL)	+8.47
MEAN LOW WATER (MLW)	+1.60
MEAN LOWER LOW WATER (MLLW)	0.00
LOWEST OBSERVED WATER LEVEL	-6.12

DRAWING INDEX

DWG. NO.	TITLE
	GENERAL
1	TITLE SHEET AND VICINITY MAPS
2	DEMOLITION SITE PLAN
3	TYPICAL DEMOLITION SECTION

PND ENGINEERS, INC. (PND) IS NOT RESPONSIBLE FOR SAFETY PROGRAMS, METHODS OR PROCEDURES OF OPERATION, OR THE CONSTRUCTION OF THE DESIGN SHOWN ON THESE DRAWINGS. DRAWINGS ARE FOR THE USE OF THIS PROJECT ONLY AND ARE NOT INTENDED FOR REUSE WITHOUT WRITTEN APPROVAL FROM PND. DRAWINGS ARE ALSO NOT TO BE USED IN ANY MANNER THAT WOULD CONSTITUTE A DETRIMENT DIRECTLY OR INDIRECTLY TO PND.

RECEIVED
APR 04 2019
PERMIT CENTER
BLD19-0145

PRELIMINARY

REVISIONS

REV.	DATE	DESCRIPTION	DWN.	CKD.	APP.

P N D ENGINEERS, INC.
9360 Glacier Highway Ste 100
Juneau, Alaska 99801
Phone: 907-586-2093
Fax: 907-586-2099
www.pndengineers.com

DESIGN: CRS CHECKED: CRS
DRAWN: PJD APPROVED: CRS
SCALE: AS SHOWN
DATE: FEB. 2019

ARCHIPELAGO PROPERTIES LLC
FOUNDATIONS DEMOLITION

SHEET TITLE:
TITLE SHEET AND VICINITY MAP

PND PROJECT NO.: 182051.02 C.A.N. NO.: AECC250

1

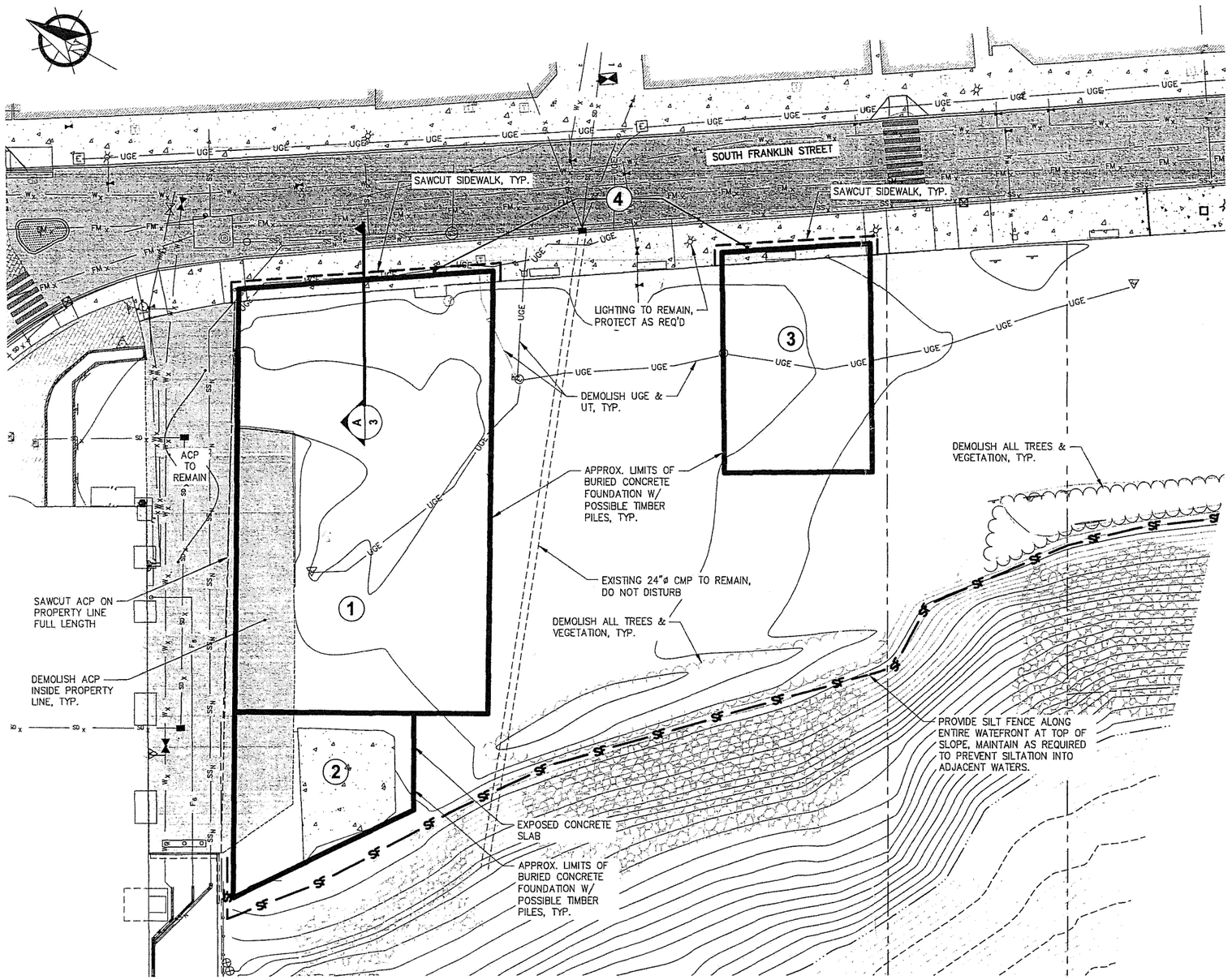

GENERAL NOTES

A	LIMITED INFORMATION IS AVAILABLE FOR BURIED FOUNDATION ELEMENTS. REVIEW ASBUILTS AND PRIOR DEMOLITION PLANS.
B	PROVIDE EROSION & SEDIMENT CONTROL FEATURES AS REQ'D TO SATISFY AKDEC REQUIREMENTS.
C	PROVIDE SAFETY BARRIERS AND FENCING AROUND ALL WORK TO PREVENT PUBLIC ACCESS.
D	PROVIDE TRAFFIC CONTROL PLAN MEETING AKDOT&PF AND CBJ APPROVAL.
E	CONTRACTOR SHALL OBTAIN UTILITY LOCATES PRIOR TO ANY GROUND DISTURBANCE. COORDINATE WITH AEL&P, PHONE, AND CABLE COMPANIES TO DISCONNECT SERVICES. DEMOLISH ALL UTILITIES WITHIN FOUNDATION LIMITS.
F	ALL DEMOLISHED MATERIALS SHALL BECOME PROPERTY OF THE CONTRACTOR AND SHALL BE REMOVED FROM THE SITE AND PROPERLY DISPOSED.
G	CONTRACTOR SHALL REMOVE ALL PILES IN THEIR ENTIRETY WITHIN DEMO LIMITS.

DEMOLITION SUMMARY

1	SALVAGE FILL ABOVE SLAB AND REUSE FOR BACKFILL OF VOID UPON COMPLETION OF FOUNDATION DEMOLITION. BUTTRESS NORTH AND EAST WALL WITH BACKFILL PRIOR TO DEMOLISHING ADJACENT CONCRETE TO PREVENT INSTABILITY AND ROTATION OF WALL.-DEMOLISH CONCRETE FOUNDATION INCLUDING SLABS, WALLS, COLUMNS, GIRDERS, FLOOR JOIST AND SPREAD FOOTINGS. STEM WALLS ON NORTH SIDES (ALLEY WAY) AND EAST (SO. FRANKLIN ST.) SIDES SHALL REMAIN EXCEPT FOR TOP 12" OF WALL. SAWCUT EXISTING ACP ON PROPERTY LINE AT NORTH SIDE OF FOUNDATION (ALLEY WAY). SAWCUT EXISTING CONCRETE SIDEWALK ON EAST SIDE OF FOUNDATION (S. FRANKLIN ST.). SAWCUT TOP OF NORTH AND EAST STEM WALLS TO REMOVE MINIMUM OF 12" BELOW SURFACE FINISHES. REMOVE ALL TIMBER PILES AND DEBRIS BELOW CONCRETE FOUNDATION PRIOR TO BACKFILLING. BACKFILL VOIDS FOLLOWNG DEMOLITION WITH USEABLE EXCAVATION AND CLASS A SHOT ROCK BARROW, PLACED IN 12" MAX. LIFTS. COMPACT ALL BACKFILL LIFTS W/ 6 UNIFORM PASSES OF 15 TON VIBRATORY STEEL DRUM COMPACTOR. PROVIDE UNIFORM FINISH GRADE MATCHING ADJACENT SITE ELEVATIONS AND GRADED TO DRAIN AWAY FROM SOUTH FRANKLIN STREET.
2	SIMILAR TO ITEM (1) HOWEVER LARGE VOID BELOW SLAB DOES NOT EXIST. ONLY NORTH WALL ALONG ALLEY WAY TO REMAIN.
3	SIMILAR TO ITEM (1) HOWEVER LARGE VOID BELOW SLAB DOES NOT EXIST. STEM WALLS AND SPREAD FOOTINGS AT THIS LOCATION ARE ESTIMATED TO EXTEND 12'–15' BELOW SLAB GRADE. DEEP EXCAVATIONS ARE ANTICIPATED FOR THIS DEMOLITION. ONLY EAST WALL ALONG SOUTH FRANKLIN ST. TO REMAIN
4	SAWCUT EXISTING 4"–6" THICK SIDEWALK AND REPLACE TO EXISTING LIMITS UPON COMPLETION OF DEMOLITION.

DEMOLISH = REMOVE & DISPOSE AT CONTRACTOR PROVIDED DISPOSAL SITE.

DIAL BEFORE YOU DIG!
586-1333

UNDERGROUND POWER, TELEPHONE, T.V., COMMUNICATIONS, WATER AND SEWER LINES ARE IN THE AREA. UTILITIES SHOWN HERE DO NOT SUBSTITUTE FOR FIELD LOCATES.

PRELIMINARY

RECEIVED
APR 04 2019
PERMIT CENTER/CDD

REVISIONS

REV.	DATE	DESCRIPTION	DWN.	CKD.	APP.

P N D ENGINEERS, INC.
9360 Glacier Highway Ste 100
Juneau, Alaska 99801
Phone: 907-586-2093
Fax: 907-586-2099
www.pndengineers.com

DESIGN: CRS CHECKED: CRS
DRAWN: PJD APPROVED: CRS
SCALE: SCALE IN FEET 0 15 30 FT.
DATE: FEB. 2019

ARCHIPELAGO PROPERTIES LLC
FOUNDATIONS DEMOLITION

SHEET TITLE: **DEMOLITION SITE PLAN**

PND PROJECT NO.: 182051.02 C.A.N. NO.: AEGG259.DWG

2

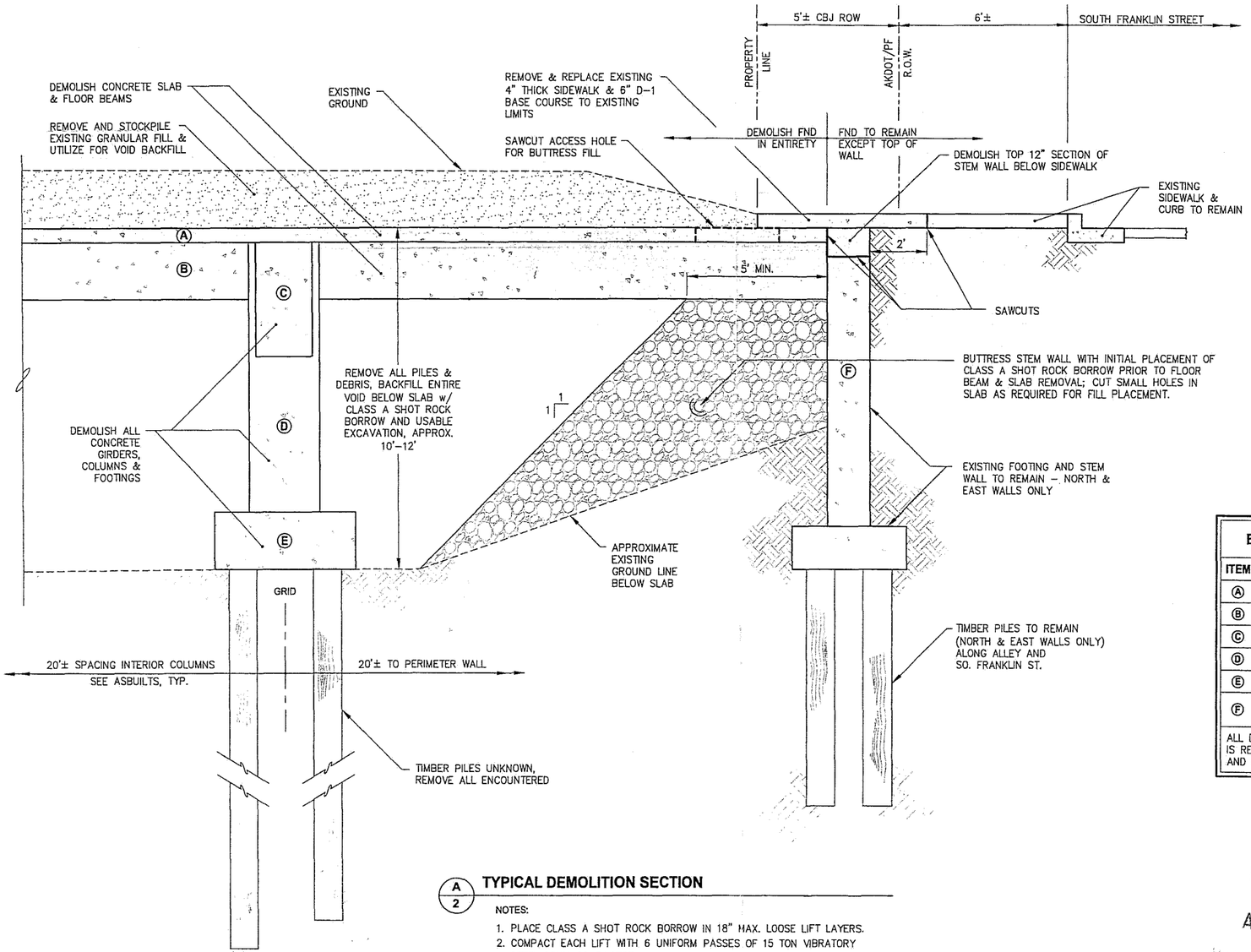

EXISTING FOUNDATION ELEMENTS	
ITEM	DESCRIPTION
Ⓐ	6"-8" SLAB
Ⓑ	12" x 24" FLOOR BEAM
Ⓒ	24" x 48" GIRDER
Ⓓ	30" x 30" COLUMN
Ⓔ	5' x 5' x 24" FOOTING
Ⓕ	18" THICK PERIMETER STEM WALL w/ FOOTING TO UNKNOWN DEPTH
ALL DIMENSIONS ARE APPROXIMATE; ALL CONCRETE IS REINFORCED; PILES ARE UNKNOWN. SEE ASBUILTS AND PHOTOGRAPHS.	

A/2 TYPICAL DEMOLITION SECTION

NOTES:

1. PLACE CLASS A SHOT ROCK BORROW IN 18" MAX. LOOSE LIFT LAYERS.
2. COMPACT EACH LIFT WITH 6 UNIFORM PASSES OF 15 TON VIBRATORY STEEL DRUM COMPACTOR.

RECEIVED
APR 04 2019
CENTER

PRELIMINARY

REVISIONS

REV.	DATE	DESCRIPTION	DWN.	CKD.	APP.

P N D ENGINEERS, INC.
9360 Glacier Highway Ste 100
Juneau, Alaska 99801
Phone: 907-586-2093
Fax: 907-586-2099
www.pndengineers.com

DESIGN: CRS CHECKED: CRS
DRAWN: PJD APPROVED: CRS
SCALE: AS SHOWN
DATE: FEB. 2019

ARCHIPELAGO PROPERTIES LLC
FOUNDATIONS DEMOLITION

SHEET TITLE: **TYPICAL DEMOLITION SECTION**

3

PND PROJECT NO.: 182051.02 C.A.N. NO.: AECC259.DWG

City & Borough of Juneau
Alaska's Capital City

BUILDING PERMIT

Permit No.
BLD20190321

* NOTE: "Building Permit" is a generic term which includes Building Safety Inspection, Grading Permits, and permits for Electrical, Plumbing and Mechanical work.

Your special attention is called to the following:

This permit is granted on the express conditions that the construction shall, in all respects, conform to the ordinances of the City and Borough of Juneau. It may be revoked at any time upon violation of any of said ordinances.

The granting of this permit does not authorize the violation of any federal, state or local law regulating construction for the violation of the terms of any deed or covenent or any zoning or other regulation.

If plan review was required, this permit must be attached to the approved drawings. The permit, plans and record of inspections must be available on site at all times while the construction is in progress and before final inspection.

The yellow posting notice must be prominently displayed to show a permit has been issued and to assist the inspectors in location of the project. This permit becomes null and void if work or construction authorized is not commenced within one year or if work or construction is suspended or abandoned for a period of one year at any time after work has commenced.

Note: City Ordinances REQUIRE a Final Inspection be approved for every Building Permit.

Inspections

Inspections can be arranged by telephoning **586-1703** or by written or faxed notification.
The Online Building Inspection Request Form is at: **www.juneau.org/permits/inspect_request.php.**
Work shall not proceed until the inspector has approved the various stages of construction. An approved Final Inspection is required.
Call before 7:00 AM for same day inspections.
Please provide the following information: 1 Permit Number, 2 Address, 3 Type of Inspection, 4 Date and Time and 5 Contact Name and Phone Number.

Job Address: **356 S FRANKLIN ST**
Permit Number: **BLD20190321**
Project Description: Downtown Waterfront Improvements phase I

Issued Date : **07/12/2019**
Parcel No: **1C070K830022**

Parcel Information : ARCHIPELAGO LT 1A

Setbacks: Zone: :
Front: 10.00 Ft. Side 1: 10.00 Ft.
Rear: 10.00 Ft. Side 2: 10.00 Ft.
Street Side: 10.00 Ft.
Comments:

Owner : ARCHIPELAGO PROPERTIES LLC
ATTN TAX DEPT
725 BROAD ST
AUGUSTA GA 30901

Applicant : CITY AND BOROUGH OF JUNEAU DOCKS A
155 S SEWARD ST
JUNEAU AK 99801

Fee Type	Date	Receipt	Amount Paid
		Total Fees Paid:	

Valuation for Permit Fee Calculations:

S.F.	Type	Rate	Amount
			1,400,000.00
		Total Valuation:	$1,400,000.00

Project Conditions and Holds:
Special Inspection - Special inspection by PND Enginering for Concrte and Reinforcing Steel, Bolts installed in Concrete, Welding, High-Strength Bolting,Pile Driving and Soil Compation. Provide weekly inspection reports and a final letter of approval before C of O.

Inspections Required: Call for inspection before covering or concealing any of the work described below. Inspections may be combined.

JUNEAU PERMIT CENTER - 230 S. Franklin Street - 4th Floor, Marine View Center - Mail: 155 S. Seward Street, Juneau, AK 99801
Phone: 586-0770 - FAX: 586-3365 - Inspection Requests: 586-1703 - Email: permits@ci.juneau.ak.us
Web Site: www.juneau.org/permits

Staff Review Sheet

Planner

Permit Intake Initials: _____

FIRE ZONE ENG WAT SEW ARCH STRUC PLUM MECH ELEC ACCESS SPEC/INSP

6/3/2019

Case No: **BLD20190321**

Site Address: 356 S FRANKLIN ST

Parcel No: 1C070K830036

Desc: Downtown Waterfront Improvements phase I

Commercial ADD

FCC Code: 329

Type of Construction: ____

New Dwelling Units: 0

Existing Dwelling Units: 0

Occupancy Class: _____

Sprinkler Substitute for Type A Construction: YES NO

Sprinkler System: FULL PARTIAL NONE Required: YES NO

Alarm System: FULL PARTIAL NONE Required: YES NO

Code Edition: IBC2012 Code Review by: _____ Date: _____

Valuation for Permit Fee Calculations:

S.F.	Type	Rate	Amount

Total Valuation:

LAND USE

ZONE/UNITS WC /

WETLAND

FLOOD ELEV 25.00

FIRM ZONE VE

FIRM MAP

LOT SIZE 43,508 SF 1.0 ACRES

SETBACKS

Front 10

Rear 10

Side 10

Other

PARKING

ANADROMOUS

EAGLES NEST

Coverage _____ Permissible/Conditional

HEIGHT _____ Permissible/Accessory

VEGETATION

HAZARD

ENGINEERING/PUB WORKS

Dwelling Units:

CITY WATER:

Permit #: UTL 19-68.

Use:

Assessment: 9000.00

Service Size: 6"

Line Size:

Meter Size:

CITY SEWER:

Permit #: UTL-19-69.

Use: COMMERCIAL

Assessment: $ 2000.00

Fixture Units: 46

LAND USE PERMITS

ADR Case #:

PLAN REVIEW APPROVALS

	Initials	Date
__ Fire	[illegible]	7/10/19
__ Zoning	[illegible]	7/9/19
X Engineering	MRM	7/1/19
X Water	MRM	7/1/19
X Sewer	MRM	7/1/19
__ Architectural	[illegible]	6/12/19
__ Structural	[illegible]	6/12/19
__ Plumbing		
__ Mechanical		
__ Electrical	[illegible]	6/6/19
__ Access		
__ Spcl Insp Form	[illegible]	7/10/19

APPROVED FOR ISSUANCE

[signature]

Signature

7/10/19

Date

PERMIT ISSUANCE FEES

__ Grading Plan Review Fee	$
__ Adjusted Plan Review Fee	$
__ Fast Track Fee	$
__ Early Start Fee	$
__ Building Permit Fee	$
__ Water Assessment Fee	$ 9000.00
__ Sewer Assessment Fee	$ 2000.00
__ Sewer Inspection Fee	$
__ Grading Permit Fee	$
__ Driveway Permit Fee	$
__ Bond for	$
__ Other	$
Total Issuance Fees	$

PERMIT ISSUANCE PAYMENTS

Date	Receipt	Check	Amount
			$
			$
			$

Parcel Tags:

5/2/16 TJF - VAR2011-0004 allows 0ft setback on NW property line for food carts.

CONDITIONS AND HOLDS ON PERMIT: (Continued on back of sheet)

BUILDING PERMIT APPLICATION (Continued)

TYPES OF INSPECTIONS

The Work Codes below contain standard inspections for the permit type. Circle additional inspections if required.

Work Codes -
B-Building Safety Inspection
B-Commercial Addition
B-Demolition
B-Grading
B-Manufactured Home Placement
B-Oil/Gas Piping
B-Porches/Decks/Carports
B-Reroof
B-Residential Electrical Service
B-Single Family Dwelling
E-ROW- Water & Sewer Service
E-ROW- Water Main
E-ROW-Driveway
E-ROW-Fire Line
E-ROW-Sewer Main
E-ROW-Sewer Main & Service
E-ROW-Sewer Service
E-ROW-Water Main & Service
E-ROW-Water Main & Sewer Main
E-ROW-Water Service
E-UTL- Sewer Main
E-UTL-Fire Line
E-UTL-Fire Line & Water Line
E-UTL-Fire Line & Water Main
E-UTL-OWTDS
E-UTL-Sewer Line
E-UTL-Pressure Sewer Line
E-UTL-Sewer Line w/ Decomm
E-UTL-Pressure Sewer Line w/Decom
E-UTL-Water Line
E-UTL-Water Main

Building-
B-Appliance/Chimney
B-Bonding
B-Building Final
B-Building Service
B-Combustion Air
B-Commercial Hoods
B-Conduit & Raceway Systems
B-Cross Connection Control
B-Demo Electric Safed Off
B-Demo Excavation Filled
B-Demo Sewer/Water Capped
B-Demolition Final
B-Devices and Equipment
B-Electrical Final
B-Fire Dampers/Sprinklers
B-Fire Separation/Rated Assemb
B-Foundation, Forms & Reinf Steel
B-Framing
B-Grounding
B-Heat Piping
B-Insulation/Vapor Barrier
B-Masonry
B-Mechanical Final
B-Meter Yoke
B-Meter Yoke with Meter
B-MH Foundation
B-MH Utilities
B-Mobile Home Final
B-Plumbing Final
B-Oil & Gas Piping/Tanks
B-Rough Electrical
B-Rough Plumbing
B-Service/Panel
B-Setback Verification
B-Smoke/Carbon Monoxide Detec
B-Special Inspection
B-Specialty Piping
B-Temporary Power
B-Under Slab Utilities
B-Ventilation/Plenums & Ducts
B-Vents (Bath, Dryer, Kitchen, etc.)
B-Yellow Tag Electrical
B-Zoning Final

Enforcement -
ENF - Enforcement Status Check

Miscellaneous -
M-Site Visit

Fire -
F-Address and Required Signage
F-Alarm Panel/Transmitter
F-Alarm Zones
F-Blasting on Individual Lot
F-Childcare/Daycare Inspection
F-Commercial Dev Land Clearing
F-Courtesy Inspection
F-Emergency Lighting Test
F-Events in Mall Hallways
F-Explosives Shipment-Unest Loc
F-FDC Location
F-Fire Extinguishers
F-Fire Final
F-Fire Hydrant Placement
F-Fire Related Inspection
F-Fixed Welding Inspection
F-Flammable/Combustible Material
F-Hazardous Material Storage
F-Kitchen Hood Suppression Test
F-Liquor License Renewal
F-Open Burning Inspection
F-Paint Booth Inspection
F-Proper Sprinkler System Bracing
F-Roof/Tar Kettle Inspection
F-Special Event Structure
F-Sprinkler Head Placement
F-Sprinkler Hydrostatic Test
F-Subdivision Land Clearing
F-Subdivision/Road Blasting
F-System Acceptance Test
F-Temporary Welding Inspection
F-Underground Fire Line Flush

Engineering -
E-Access to Curb Stop Valve
E-ADEC on-site Sewer Final
E-ADEC on-site Water Main Final
E-Asbuilt Survey Required
E-Bacteriological Test
E-Bedding / Backfill
E-Billing Authorization
E-Blasting Verification
E-Bore Flush
E-CBJ Waste Water Department
E-CBJ Water Department
E-Chlorination Test
E-Cleanouts
E-Continuity
E-Cross Connection Control
E-Culvert
E-Curb Box
E-Curb Cut Final
E-Curb Cut Reinforcement
E-Curb Stop
E-Depth
E-Electrical Utility
E-Final
E-Fire Hydrants
E-Fire Line Final
E-General Engineering Final
E-Grade
E-Grading/Drainage
E-Headwalls
E-Installation of Access & Ports
E-Installation of Insulation
E-Location
E-Manhole Tap
E-Manholes - Sewer Main
E-Material
E-OWTDS Inspection
E-Pressure Test
E-Pump Ticket
E-Residual / Free Chlorine
E-Retaining Walls
E-ROW - Final
E-ROW Restoration
E-Septic Decommission
E-Sewer Connection
E-Sewer Disconnect
E-Sewer Final
E-Sewer Main Final
E-Sewer Service Tap
E-Sewer System
E-Sidewalk Final
E-Sidewalk Reinforcement
E-Size
E-Soil
E-State D.O.T. Approval
E-Storm Drains
E-Street Patch
E-Streets
E-Telephone Utility
E-Thaw Waiver
E-Thaw Wire
E-Thrust Blocks
E-Turn Water OFF
E-Turn Water ON
E-TV Cable
E-Utility Ribbon
E-Utility Trench
E-Water Final
E-Water Meter Required
E-Water Meter/Yoke
E-Water Service Tap
E-Water System
E-Water Tap
E-Width

ADDITIONAL CONDITIONS AND HOLDS (STAFF)

City & Borough of Juneau
Alaska's Capital City

Application Date: **June 3, 2019**

BUILDING PERMIT APPLICATION

NOTE: THIS IS NOT A BUILDING PERMIT

* NOTE: "Building Permit" is a generic term which includes Building Safety Inspections, Grading Permits, and permits for Electrical, Plumbing and Mechanical work.

Case No: **BLD20190321**

Case Description: Downtown Waterfront Improvements phase I

Site Address: **356 S FRANKLIN ST**

Check No. of Existing Dwelling Units:

Parcel No: 1C070K830036
1C070K830037
1C070K830038
1C070K830039

No. of New Dwelling Units: 0

Legal Description: ARCHIPELAGO LT 1

No. of Removed Dwelling Units: 0

Applicant : CITY AND BOROUGH OF JUNEAU DOCKS AND HARBORS
155 S SEWARD ST
JUNEAU AK 99801

PH1 586-0398

Owner: ARCHIPELAGO PROPERTIES LLC
ATTN TAX DEPT
725 BROAD ST
AUGUSTA GA 30901

PH: _____ FAX _____

Contractor: TO BE BID

Valuation for Permit Fee Calculations:

S.F.	Type	Rate	Amount

Total Valuation:

Associated Cases:

None.

Parcel Tags:

5/2/16 TJF - VAR2011-0004 allows 0ft setback on NW property line for food carts.

Notes and Conditions:

Applicant's Signature
(Owner, Contractor or Authorized Agent)

Date

Staff Acceptance

I hereby certify that I have read and examined this application and know the same to be true and correct. I further certify that all provisions of laws and ordinances governing this type of work will be complied with whether specified herein or not. I understand that the granting of a permit does not presume to give authority to violate or cancel the provisions of any other federal, state or local law regulating construction or the performance of construction.

JUNEAU PERMIT CENTER - 230 S. Franklin Street - 4th Floor, Marine View Center - Mail: 155 S. Seward Street, Juneau, AK 99801
Phone: 586-0770 - FAX: 586-3365 - Inspection Requests: 586-1703 - Email: permits@ci.juneau.ak.us
Web Page: HTTP://WWW.JUNEAU.ORG/PERMITS

City & Borough of Juneau
Alaska's Capital City

UTILITY PERMIT

Permit No.
UTL20190068

* NOTE "Utility Permit" is a generic term which includes Water Connection Permits, Sewer Connection Permits, Water Inspections and Sewer Inspections.

Your special attention is called to the following:

This permit is granted on the express conditions that the construction shall, in all respects, conform to the ordinances of the City and Borough of Juneau. It may be revoked at any time upon violation of any of said ordinances.

The granting of this permit does not authorize the violation of any federal, state or local law regulating construction for the violation of the terms of any deed or covenent or any zoning or other regulation.

If plan review was required, this permit must be attached to the approved drawings. The permit, plans and record of inspections must be available on site at all times while the construction is in progress and before final inspection.

The yellow posting notice must be prominently displayed to show a permit has been issued and to assist the inspectors in location of the project. This permit becomes null and void if work or construction authorized is not commenced within one year or if work or construction is suspended or abandoned for a period of one year at any time after work has commenced.

Inspections can be arranged by telephoning **586-1703** or by written or faxed notification.
The Online Building Inspection Request Form is at: **www.juneau.ak.us/cdd/insp_req.htm**.
Work shall not proceed until the inspector has approved the various stages of construction.

Call before 7:00 AM for same day inspections.

Job Address: **356 S FRANKLIN ST**
Permit Number: **UTL20190068**
Project Description: 6" customer water line

Issued Date : **07/12/2019**
Parcel No: **1C070K830022**
UTO Date: **07/12/2020**

Parcel Informati ARCHIPELAGO LT 1A

Owner : ARCHIPELAGO PROPERTIES LLC
ATTN TAX DEPT
725 BROAD ST
AUGUSTA GA 30901

Applicant : CITY AND BOROUGH OF JUNEAU DOCK
155 S SEWARD ST
JUNEAU AK 99801

Fee Type	Date	Receipt	Amount Paid

Total Fees Paid:

Project Conditions and Holds:
None.

Inspections Required: Call for inspection before covering or concealing any of the work described below. Inspections may be combined.

E-Size	E-Depth	E-Curb Box
E-Curb Stop	E-Access to Curb Stop V	E-Thaw Wire
E-Pressure Test	E-Water Meter/Yoke	E-Cross Connection Cont
E-Thaw Waiver	E-Billing Authorization	E-ROW Restoration
E-Water Final		

JUNEAU PERMIT CENTER - 230 S. Franklin Street - 4th Floor, Marine View Center - Mail: 155 S. Seward Street, Juneau, AK 99801
Phone: 586-0770 - FAX: 586-3365 - Inspection Requests: 586-1703 - Email: permits@mail.ci.juneau.ak.us

City & Borough of Juneau
Alaska's Capital City

UTILITY PERMIT

Permit No.
UTL20190069

* NOTE: "Utility Permit" is a generic term which includes Water Connection Permits, Sewer Connection Permits, Water Inspections and Sewer Inspections.

Your special attention is called to the following:

This permit is granted on the express conditions that the construction shall, in all respects, conform to the ordinances of the City and Borough of Juneau. It may be revoked at any time upon violation of any of said ordinances.

The granting of this permit does not authorize the violation of any federal, state or local law regulating construction for the violation of the terms of any deed or covenent or any zoning or other regulation.

If plan review was required, this permit must be attached to the approved drawings. The permit, plans and record of inspections must be available on site at all times while the construction is in progress and before final inspection.

The yellow posting notice must be prominently displayed to show a permit has been issued and to assist the inspectors in location of the project. This permit becomes null and void if work or construction authorized is not commenced within one year or if work or construction is suspended or abandoned for a period of one year at any time after work has commenced.

Inspections can be arranged by telephoning **586-1703** or by written or faxed notification.
The Online Building Inspection Request Form is at: **www.juneau.ak.us/cdd/insp_req.htm**.
Work shall not proceed until the inspector has approved the various stages of construction.

Call before 7:00 AM for same day inspections.

Job Address: **356 S FRANKLIN ST**
Permit Number: **UTL20190069**
Project Description: install of new sewer line.

Issued Date : **07/12/2019**
Parcel No: **1C070K830022**
UTO Date: **07/11/2020**

Parcel Informati ARCHIPELAGO LT 1A

Owner : ARCHIPELAGO PROPERTIES LLC
ATTN TAX DEPT
725 BROAD ST
AUGUSTA GA 30901

Applicant : CITY AND BOROUGH OF JUNEAU DOCK
155 S SEWARD ST
JUNEAU AK 99801

Fee Type	Date	Receipt	Amount Paid

Total Fees Paid:

Project Conditions and Holds:
None.

Inspections Required: Call for inspection before covering or concealing any of the work described below. Inspections may be combined.

E-Size	E-Depth	E-Material
E-Soil	E-Sewer Connection	E-Cleanouts
E-Billing Authorization	E-Grade	E-ROW Restoration
E-Sewer Final		

JUNEAU PERMIT CENTER - 230 S. Franklin Street - 4th Floor, Marine View Center - Mail: 155 S. Seward Street, Juneau, AK 99801
Phone: 586-0770 - FAX: 586-3365 - Inspection Requests: 586-1703 - Email: permits@mail.ci.juneau.ak.us

SPECIAL INSPECTION PROPOSAL FORM

No

Note: this form must be completed by the Owner or Architect/Engineer of Record and approved by the Building Official prior to issuance of a Building Permit. The qualified individual special inspector must be identified along with their firm. Special Inspector may not be employed by the Contractor or anyone responsible for the construction work.

PROJECT DWI DATE 7/8/19
OWNER CMT Docks & Harbors PERMIT APPLICATION NUMBER BLD2019032.1

PROPOSED SPECIAL INSPECTOR Firm: PND ENGINEERS INC. and Individual: Mark SAMS
(Please fill out one of these forms for each Special Inspector on this project. Attach proposed inspector's qualifications.)

PROPOSED TESTING AGENCIES PDC ENGINEERS FOR MATERIAL TESTING
(Specify which catagory they are testing.)

TYPES OF INSPECTIONS REQUIRED:

Check each type of inspection required by Architect/Engineer of Record as indicated on the approved building plans and specifications.

☑ 1. CONCRETE
Inspection Scope & Schedule* ALL STRUCTURAL CONCRETE INCLUDING SUSPENDED SLABS, RETAIN WALLS, AND FOUNDATIONS. VERIFY FORMWORK, SIZE, AND LOCATION.
Frequency of Sampling Materials SAMPLE ONCE PER 50CY OF PLACED CONCRETE OR ONCE PER DAY
Frequency of Testing Compressive Strength TESTING shall be (1) 7-DAY, (1) 14-DAY, AND (3) 28-DAY

☑ 2. BOLTS INSTALLED IN CONCRETE
Inspection Scope & Schedule* Verify ALL Highstrength BOLTS For Grade, Length, and LOCATION. Inspect visually prior to concrete placement.

☐ 3. SPECIAL MOMENT - RESISTING CONCRETE FRAME
Inspection Scope & Schedule* NA
Frequency of Sampling Materials
Frequency of Testing

☑ 4. REINFORCING STEEL AND PRESTRESSED STEEL TENDONS
Inspection Scope & Schedule* ALL Reinforcement shall be verified For Size, Grade, Location, Spacing and Cover
Method of Testing Visual

5. WELDING

☐ A. SPECIAL MOMENT - RESISTING STEEL FRAMES
Inspection Scope & Schedule* NA
Type of non-destructive testing
Frequency of Tests

☑ B. STRUCTURAL WELDING INCLUDING REINFORCING STEEL
Inspection Scope & Schedule* ALL Field WELDS shall be visually inspected For weld size, Length, Location, And Discontinuities.
Type of non-destructive testing Visual
Frequency of Tests Periodic For fillet welds 5/16" or less AND Continuous For All other welds.

☑ 6. HIGH-STRENGTH BOLTING
Inspection Scope & Schedule* Verify BOLT Pretension with Skidmore Whilhelm Device and Turn-OF-THE-NUT Method. Check BOLTS For Grade, Size and Washers.
Method of Testing Visual Turn-OF-NUT METHOD ON EACH BOLT.
Frequency of Testing Test (3) Bolts OF each Diameter and length w/ Skidmore Device.

☐ 7. STRUCTURAL MASONRY
Inspection Scope & Schedule* NA
Frequency of Sampling Materials
Frequency of Testing

☐ 8. REINFORCED GYPSUM CONCRETE
Inspection Scope & Schedule* NA
Frequency of Sampling Materials
Frequency of Testing

☐ **9. INSULATING CONCRETE FILL**
Inspection Scope & Schedule* NA
Frequency of Sampling Materials
Frequency of Testing

☐ **10. SPRAYED-ON FIREPROOFING**
Inspection Scope & Schedule* NA
Method of Inspection
Frequency of Sampling Materials
Frequency of Testing

☑ **11. PILING, DRILLED PIERS AND CAISSONS**
Inspection Scope & Schedule* Verify pile capacity in compression & Tension Recording Blow counts and hammer energy Inspect each pile During Driving
Method of Inspection Visual

☐ **12. SHOTCRETE**
Inspection Scope & Schedule* NA
Method of Inspection
Frequency of Sampling Materials
Frequency of Testing

☑ **13. SPECIAL GRADING, EXCAVATION AND FILLING**
Inspection Scope & Schedule* Verify Extent of Excavation Fill material Compliance w/ Compaction, Compaction Effort and soil Density After Compaction w/ Proctor
Method of Testing Soil Density Level of Effort For Shot Rock, Nuclear Densometer For Base Course.

☐ **14A. SPECIAL CASES** TYPE: NA
Inspection Scope & Schedule*
Method of Inspection
Other

☐ **14B. SPECIAL CASES** TYPE: NA
Inspection Scope & Schedule*
Method of Inspection
Other

☐ **14C. SPECIAL CASES** TYPE: NA
Inspection Scope & Schedule*
Method of Inspection
Other

SPECIAL INSPECTOR CERTIFICATION:
I hereby certify that I am qualified to perform the special inspection items marked above, that I will perform the special inspections at the appropriate times scheduled by the contractor and that I will submit weekly and final reports.

Special Inspector: Mark Sams MS Date: 7/6/19

OWNER CERTIFICATION: (May be signed by Architect /Engineer of Record on Owner's behalf.)
I hereby certify that I will employ the aforementioned Special Inspector to perform the inspections shown above.

Owner: [signature] Date: 7/10/19

BUILDING OFFICIAL'S APPROVAL OF PROPOSAL OF SPECIAL INSPECTION:

Building Official: John Young For Charlie Ford Date: 7/10/19

Note:
Special Inspection weekly reports must be submitted to the owner and to the Building Official within 5 working days of the last day of the week being reported to avoid Suspension of the Building Permit and possible Stop Work Order.
A monthly summary letter is required for overall status including any outstanding items that require followup. The final special inspection approval letter(s) must be submitted before use or occupancy. Any variation to the special inspection proposal requires prior approval of the Building Official.

* (extent of work inspected; continuous or periodic, frequency)

(SPECINSP.XLS Revised: 6/4/08)

CITY & BOROUGH OF JUNEAU - DOCKS & HARBORS
DOWNTOWN WATERFRONT IMPROVEMENTS
PHASE I
CBJ CONTRACT NO. DH19-014



VICINITY

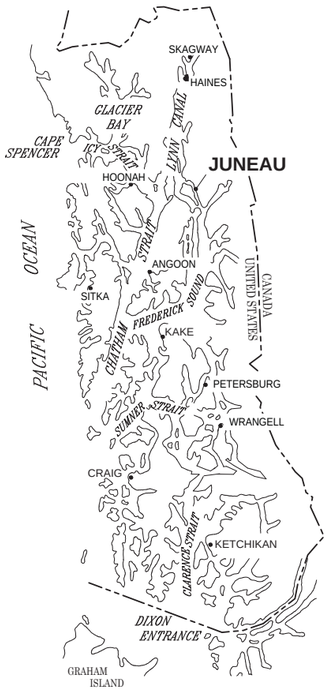

SOUTHEAST ALASKA



VICINITY MAP

SCALE IN FEET
0 400 800 FT.

TIDAL DATA

SOURCE: NOAA NOS/CO-OPS STATION ID: 9452210
JUNEAU, ALASKA 2/6/18

DESCRIPTION	ELEV. (FT.)
HIGHEST OBSERVED WATER LEVEL	+25.1
MEAN HIGHER HIGH WATER (MHHW)	+16.3
MEAN HIGH WATER (MHW)	+15.3
MEAN SEA LEVEL (MSL)	+8.6
MEAN TIDE LEVEL (MTL)	+8.5
MEAN LOW WATER (MLW)	+1.6
MEAN LOWER LOW WATER (MLLW)	0.0
LOWEST OBSERVED WATER LEVEL	-5.7

PND ENGINEERS, INC. (PND) IS NOT RESPONSIBLE FOR SAFETY PROGRAMS, METHODS OR PROCEDURES OF OPERATION, OR THE CONSTRUCTION OF THE DESIGN SHOWN ON THESE DRAWINGS. DRAWINGS ARE FOR THE USE OF THIS PROJECT ONLY AND ARE NOT INTENDED FOR REUSE WITHOUT WRITTEN APPROVAL FROM PND. DRAWINGS ARE ALSO NOT TO BE USED IN ANY MANNER THAT WOULD CONSTITUTE A DETRIMENT DIRECTLY OR INDIRECTLY TO PND.

PND ENGINEERS, INC.
9360 Glacier Highway Ste 100
Juneau, Alaska 99801
Phone: 907-586-2093
Fax: 907-586-2099
www.pndengineers.com

DESIGN: CRS CHECKED: CRS
DRAWN: PJD APPROVED: CRS
SCALE: AS SHOWN

STATE OF ALASKA 49TH Charles R. Somerville CE-8845 REGISTERED PROFESSIONAL ENGINEER
DATE: 5/23/2019

DOWNTOWN WATERFRONT IMPROVEMENTS
PHASE I
CBJ CONTRACT NO. DH19-014

SHEET TITLE:
TITLE SHEET AND VICINITY MAP

G1.01

PND PROJECT NO.: 182045 C.A.N. NO.: AECC250

Attachment G – BLD2019-0321

DRAWING INDEX

DWG NO.	TITLE
	GENERAL
G1.01	TITLE SHEET AND VICINITY MAP
G1.02	DRAWING INDEX
G1.03	GENERAL NOTES, LEGEND AND ABBREVIATIONS
G1.04	EXISTING CONDITIONS, SURVEY CONTROL AND BOREHOLE LOCATIONS
G1.05	DEMOLITION SITE PLAN
G1.06	DEMOLITION SECTIONS & PHOTOS
G1.07	DEMOLITION SECTIONS & PHOTOS
G1.08	DEMOLITION SECTIONS
G1.09	DEMOLITION DETAILS
G1.10	OVERALL SITE PLAN
G1.11	STAGING AREAS
	CIVIL
C1.01	PARTIAL SITE PLAN
C1.02	PARTIAL CONCRETE DECK GRADING PLANS
C1.03	POINT LAYOUT TABLES
C1.04	TYPICAL SITE SECTIONS
C1.05	TYPICAL SITE SECTIONS
C1.06	CIVIL DETAILS
C1.07	STORM DRAIN PLAN
C1.08	WATER & SEWER UTILITY PLAN
C1.09	STORM DRAIN DETAILS
C1.10	STORM DRAIN DETAILS
C1.11	WATER & SEWER DETAILS
C1.12	WATER & SEWER DETAILS
C1.13	STRIPING & SIGNAGE PLAN
C1.14	STRIPING, BUMPER CURB & DRIVEWAY CURB CUT
C1.15	APPROACH DOCK UTILITIES EXISTING CONDITION
C1.16	APPROACH DOCK UTILITIES REPLACEMENT PLAN
C1.17	APPROACH DOCK UTILITIES SUPPORT DETAILS

DRAWING INDEX (CONT.)

DWG NO.	TITLE
	STRUCTURAL
S1.01	STRUCTURAL GENERAL NOTES
S1.02	PILE SCHEDULES
S1.03	PILE TYPICAL DETAILS
S1.04	PILE TYPICAL DETAILS
S1.05	TYPICAL DOCK FRAMING DETAILS
S1.06	TYPICAL DOCK FRAMING DETAILS
S1.07	LIGHT POLE TYPICAL DETAILS
S1.08	LIGHT POLE TYPICAL DETAILS
S1.09	CONCRETE RETAINING WALL PLAN AND PROFILE
S1.10	CONCRETE RETAINING WALL SECTIONS
S1.11	CONCRETE RETAINING WALL SECTIONS AND DETAILS
S1.12	CONCRETE RETAINING WALL DETAILS
S1.13	CONCRETE RETAINING WALL PEDESTAL DETAILS
S1.14	CONCRETE RETAINING WALL DETAILS
S1.15	TRANSITION PLATE PARTIAL PLAN AND SECTION
S1.16	TRANSITION PLATE LAYOUT
	STRUCTURAL - CONCRETE DECK
S2.01	CONCRETE DECK PARTIAL PLAN
S2.02	CONCRETE DECK ELEVATION AND SECTION
S2.03	CONCRETE DECK FRAMING PLAN
S2.04	PILE CAP PLAN
S2.05	PILE CAP PLAN
S2.06	PILE CAP PLAN
S2.07	CONCRETE DECK SECTIONS
S2.08	CONCRETE DECK DETAILS
S2.09	CONCRETE DECK DETAILS
S2.10	CONCRETE DECK RAILING SECTIONS AND ELEVATIONS
S2.11	CONCRETE WALL SECTIONS AND MISCELLANEOUS RAILING DETAIL
S2.12	MISCELLANEOUS RAILING DETAIL
S2.13	SWING GATE PLAN, ELEVATION, AND SECTION
S2.14	PARKING CANOPY PLAN
S2.15	PARKING CANOPY SECTIONS AND DETAILS
S2.16	PARKING CANOPY SECTIONS AND DETAILS
S2.17	PARKING CANOPY SECTIONS AND DETAILS
S2.18	ACCESS PLATFORM

DRAWING INDEX (CONT.)

DWG NO.	TITLE
	STRUCTURAL - TIMBER DECK
S3.01	TIMBER DECK PARTIAL PLAN
S3.02	TIMBER DECK SECTION
S3.03	TIMBER DECK FRAMING PLAN
S3.04	TIMBER DECK OVER FRAMING
S3.05	PILE CAP PLAN
S3.06	PILE CAP PLAN
S3.07	ADA APPROACH RAMP ELEVATION AND SECTION
S3.08	TIMBER DECK SECTIONS AND DETAILS
S3.09	TIMBER OVER FRAMING DETAILS
S3.10	PEDESTRIAN GUARDRAIL ELEVATION
S3.11	PEDESTRIAN GUARDRAIL DETAILS
S3.12	PEDESTRIAN GUARDRAIL SECTION AND DETAILS
	STRUCTURAL - TIMBER DECK MODIFICATION
S4.01	SEAWALK MODIFICATIONS PLAN / ELEVATION
S4.02	SEAWALK MODIFICATIONS PLAN AND SECTIONS
S4.03	SEAWALK MODIFICATION DETAILS
S4.04	SEAWALK DECK MODIFICATION DETAILS
S4.05	SEAWALK DECK MODIFICATION DETAILS
	STRUCTURAL - ANODES
S5.01	PILE ANODES
	LANDSCAPE
L1.01	CONCRETE PAVING FINISH LAYOUT PLAN
	ELECTRICAL
E1.01	OVERALL SITE PLAN - ELECTRICAL 1 OF 3
E1.02	OVERALL SITE PLAN - ELECTRICAL 2 OF 3
E1.03	OVERALL SITE PLAN - ELECTRICAL 3 OF 3
E1.04	PARTIAL CONCRETE DECK & TRENCH DETAIL - ELECTRICAL
E2.01	SINGLE LINE DIAGRAM
E2.02	EQUIPMENT & PANEL SCHEDULES
E2.03	ELECTRICAL RACK ELEVATION
E3.01	20' POLE DETAILS
E3.02	12' POLE DETAILS, LIGHT POLE TABLE & LUMINAIRE SCHEDULE
E3.03	LTG CONTROL SCHEMATIC & FUTURE POWER SINGLE LINE
E3.04	PARKING CANOPY PLAN - ELECTRICAL
E3.05	PARKING CANOPY SECTIONS AND DETAILS - ELECTRICAL
E4.01	FIBER CABLE RISER DIAGRAM
E4.02	EXISTING & NEW ACS RISER DIAGRAM
E4.03	CAMERA SCHISMATIC

CITY & BOROUGH OF JUNEAU DOCKS & HARBORS

REVISIONS

REV.	DATE	DESCRIPTION	DWN.	CKD.	APP.

PND ENGINEERS, INC.
9360 Glacier Highway Ste 100
Juneau, Alaska 99801
Phone: 907-586-2093
Fax: 907-586-2099
www.pndengineers.com

DESIGN: PJD CHECKED: CRS
DRAWN: PJD APPROVED: CRS
SCALE: NA
DATE: 5/23/2019

STATE OF ALASKA 49TH — Charles R. Somerville CE-8845 — REGISTERED PROFESSIONAL ENGINEER

DOWNTOWN WATERFRONT IMPROVEMENTS
PHASE I
CBJ CONTRACT NO. DH19-014

SHEET TITLE: **DRAWING INDEX**

PND PROJECT NO.: 182045 C.A.N. NO.: AECC250

G1.02

GENERAL NOTES

1. **EROSION AND POLLUTION CONTROL PLANS**

   THE CONTRACTOR SHALL DEVELOP AND SUBMIT FOR ENGINEER AND AGENCY REVIEW AND APPROVAL A STORM WATER POLLUTION PREVENTION PLAN (SWPPP). THIS PLAN SHALL INCLUDE AN EROSION AND SEDIMENT CONTROL PLAN BASED UPON THE CONTRACTOR'S SCHEDULING, EQUIPMENT AND WORK. TO THE GREATEST EXTENT POSSIBLE FOLLOW THE ALASKA DEPARTMENT OF TRANSPORTATION AND PUBLIC FACILITIES (ADOT/PF) ALASKA STORM WATER POLLUTION PREVENTION PLAN GUIDE (ASWPPPG). THE PLAN SHALL CONSIDER FIRST PREVENTING EROSION, THEN MINIMIZING AND TRAPPING SEDIMENT PRIOR TO ITS ENTERING THE WATERWAYS. THE PLAN MUST ADDRESS THE SITE-SPECIFIC CONTROLS AND MANAGEMENT FOR THE CONSTRUCTION SITE AS WELL AS ALL MATERIAL SITES, WASTE DISPOSAL SITES AND AFFECTED AREAS. THE PLAN MUST INCORPORATE ALL THE REQUIREMENTS OF THE PROJECT PERMITS. BEST MANAGEMENT PRACTICES AS LISTED IN THE ASWPPPG SHALL BE USED.

   THE CONTRACTOR SHALL PREPARE A HAZARDOUS MATERIAL CONTROL PLAN (HMCP) FOR THE HANDLING, STORAGE, CLEAN-UP AND DISPOSAL OF PETROLEUM AND OTHER HAZARDOUS SUBSTANCES. THE CONTRACTOR SHALL LIST AND GIVE LOCATIONS OF ALL HAZARDOUS MATERIALS, INCLUDING FIELD OFFICE MATERIALS, TO BE USED AND STORED ON-SITE AND THEIR ESTIMATED QUANTITIES. THE PLAN SHALL PROVIDE DETAILS FOR STORING THESE MATERIALS AS WELL AS DISPOSING WASTE PETROLEUM PRODUCTS AND OTHER HAZARDOUS MATERIALS GENERATED BY THE PROJECT.

   IDENTIFY THE LOCATIONS WHERE HAZARDOUS MATERIAL STORAGE, FUELING AND MAINTENANCE ACTIVITIES WILL TAKE PLACE. IF ON-SITE, DESCRIBE THE MAINTENANCE ACTIVITIES AND LIST ALL CONTROLS TO PREVENT THE ACCIDENTAL SPILLAGE OF OIL, PETROLEUM PRODUCTS AND OTHER HAZARDOUS MATERIALS. DETAIL PROCEDURES FOR CONTAINMENT AND CLEANUP OF HAZARDOUS SUBSTANCES INCLUDING A LIST OF THE TYPES AND QUANTITIES OF EQUIPMENT AND MATERIALS AVAILABLE ON-SITE TO BE USED.

   THE PLAN SHALL PROVIDE DETAILS FOR PREVENTION, CONTAINMENT, CLEAN-UP AND DISPOSAL OF SOIL AND WATER CONTAMINATED BY ACCIDENTAL SPILLS AND FOR UNEXPECTED CONTAMINATED SOIL AND WATER ENCOUNTERED DURING CONSTRUCTION.

2. MATCH EXISTING GRADES AT PROJECT LIMITS AND WHERE REQUIRED TO MATCH ELEVATIONS AT EXISTING ROADS.

3. ALL REMOVED MATERIALS THAT ARE NOT SUITABLE FOR REUSE ON THE PROJECT SHALL BECOME THE PROPERTY OF THE CONTRACTOR AND PROPERLY DISPOSED OF AT AN APPROVED SITE.

4. THE LOCATIONS OF EXISTING FEATURES AND UTILITIES SHOWN ON THE DRAWINGS ARE APPROXIMATE. ADDITIONAL UTILITIES MAY BE PRESENT HOWEVER ARE NOT SHOWN. THE CONTRACTOR SHALL VERIFY ALL UTILITY LOCATIONS IN THE FIELD AS NECESSARY, PRIOR TO BEGINNING WORK. THE HORIZONTAL AND VERTICAL LOCATIONS OF ALL UTILITIES ENCOUNTERED IN THE FIELD SHALL BE RECORDED ON THE CONTRACTOR'S RECORD DRAWINGS. CONTACT LOCAL UTILITY COMPANIES PRIOR TO ANY/ ALL EXCAVATIONS AT THE FOLLOWING TELEPHONE NUMBERS:

DIAL BEFORE YOU DIG!
586-1333
UNDERGROUND POWER, TELEPHONE, T.V., COMMUNICATIONS, WATER AND SEWER LINES ARE IN THE AREA. UTILITIES SHOWN HERE DO NOT SUBSTITUTE FOR FIELD LOCATES.

5. CBJ ENGINEERING STANDARD DETAILS BOOK DATED APRIL, 2011 IS MADE A PART OF THIS CONTRACT, WITH CURRENT REVISIONS AS APPLICABLE. ADOT&PF STANDARD DETAILS, LATEST VERSION, ARE MADE A PART OF THIS CONTRACT.

6. PROPERTY DISTURBED DURING CONSTRUCTION OUTSIDE OF PROJECT LIMITS SHALL BE RESTORED TO ITS PRE-CONSTRUCTION CONDITION OR BETTER AT NO ADDITIONAL COST.

7. GRADING AND ALIGNMENT OF PIPE, STRUCTURES & FINAL SURFACING ARE SUBJECT TO MINOR REVISIONS BY THE ENGINEER TO FIT SITE CONDITIONS. GRADE ALL IMPROVEMENTS WITH POSITIVE DRAINAGE AWAY FROM STRUCTURES.

8. PROPERTY LINE LOCATIONS USED IN THESE PLANS ARE DERIVED FROM RECORD PLATS AND DO NOT REPRESENT A BOUNDARY SURVEY.

LEGEND

EXISTING	THIS PROJECT	
T		TELEPHONE PEDESTAL
V		TELEVISION PEDESTAL
E		ELECTRICAL PEDESTAL
OHE$_X$		OVERHEAD ELECTRICAL
FO^U_X		BURIED FUEL LINE
E^U_X		ELECTRICAL (UNDERGROUND)
W$_X$	W$_N$	WATER
SS$_X$	SS$_N$	SANITARY SEWER
ROW		RIGHT-OF-WAY
C^U_X		COMMUNICATION (CABLE/TEL)
SD$_X$	1	STORM DRAIN
FM$_X$	FM	FORCE MAIN
	? ?	ESTIMATION OF LAYER
		PROPERTY LINE
		CROWN
X X		GEOTEXTILE FABRIC
		GUARDRAIL
		GUY WIRE ANCHOR
		SURVEY CONTROL
UP		UTILITY POLE
TMH		TELEPHONE VAULT
		BOLLARD
		CURB & GUTTER
E		ELECTRICAL TRANSFORMER
EMH		ELECTRICAL VAULT
H		ELECTRICAL HANDHOLE
		FIRE HYDRANT
	5	LAYOUT POINT
		LAYOUT RADIUS
		LUMINAIRE POLE
		TRAFFIC SIGNAL
SSMH	SSMH	SANITARY SEWER MANHOLE
SDMH	SDMH	STORM DRAIN MANHOLE
	OWS SDMH	
		STORM DRAIN INLET
		SIGN
		TREE/VEGETATION
		WATER VALVE

ABBREVIATIONS

A	
@	AT
AC	ASBESTOS CEMENT PIPE
ACP	ASPHALT CONCRETE PAVEMENT
ADA	AMERICANS WITH DISABILITIES ACT
ADJ	ADJUSTABLE
APF	ASSOCIATED PILE AND FITTING CORP.
APPROX. or APPX.	APPROXIMATE
ATS	ALASKA TIDELANDS SURVEY
AV	AIR RELEASE VALVE
B	
BCC	BEGINNING OF CURB CUT
BFV	BUTTERFLY VALVE
BLDG	BUILDING
BOP	BEGINNING OF PROJECT
BTM, BOT	BOTTOM
BTWN	BETWEEN
C	
C&G	CURB & GUTTER
CB	CATCH BASIN
CBJ	CITY & BOROUGH OF JUNEAU
CI	CAST IRON
CIP	CAST-IN-PLACE
CJ	CONTROL JOINT
℄	CENTER LINE
CLR	CLEAR
CMP	CORRUGATED METAL PIPE
CO	CLEANOUT
C.O.E.	CORPS OF ENGINEERS
COMM	COMMUNICATION
CONC.	CONCRETE
CP	COMPLETE PENETRATION
CPEP/CPP	CORRUGATED POLYETHYLENE PIPE
COR	CORNER
CSC	COUNTERSINK
CTE	CONNECT TO EXISTING
CTR	CENTER
CY	CUBIC YARD
D	
DCP	DISSIMILAR PIPE COUPLING
D/DIA	DIAMETER
DBL	DOUBLE
DEMO	DEMOLITION
DL	DEAD LOAD
DIP	DUCTILE IRON PIPE
DIM	DIMENSION
DN	DOWN
DTL	DETAIL
E	
E	EAST
EA.	EACH
EC	EDGE OF CONCRETE
ECC	END OF CURB CUT
EG	EXISTING GRADE
EJ	EXPANSION JOINT
EL/ELEV	ELEVATION
ELEL	ELECTRICAL
EOP	END OF PAVEMENT
EQ	EQUAL
EQUIP	EQUIPMENT
EST	ESTIMATE
EW	EACH WAY
EXC	EXCAVATE
EXIST	EXISTING
F	
FC	FACE OF CURB
FD	FLOOR DRAIN
FF	FINISHED FLOOR
FG	FINISHED GRADE
FH	FIRE HYDRANT, FLAT HEAD
FIN	FINISH (ED)
FM	FORCE MAIN SEWER
FND	FOUNDATION
FOC	FACE OF CURB
FT	FOOT
FTG	FOOTING
FL	FLOWLINE OR FLANGE
G	
GALV	GALVANIZED
GB	GRADE BREAK
GRD	GROUND
GRS	GALVANIZED RIGID STEEL
GV	GATE VALVE
H	
H&T	HUB & TACK
HD	HEAVY DUTY
HDG	HOT-DIPPED GALVANIZED
HDPE	HIGH DENSITY POLYETHYLENE
HORIZ	HORIZONTAL
HSE	HOUSE
HT	HEIGHT
HWY.	HIGHWAY
I	
IAW	IN ACCORDANCE WITH
ID	INSIDE DIAMETER
IE	INVERT ELEVATION
IN	INCH
IP	IRON PIPE
INCL	INCLUDE (D) (ING)
INSUL	INSULATE (D) (ION)
INV	INVERT
J	
JB	JUNCTION BOX
L	
LBS	POUNDS
LF	LINEAR FEET
LL	LIVE LOAD
LOC	LOCATION
LS	LUMP SUM
M	
MAX	MAXIMUM
M.E.	MATCH EXISTING
MECH	MECHANICAL
MFR	MANUFACTURE (R)
MH	MANHOLE
MJ	MECHANICAL JOINT
MI	MALLEABLE IRON
MIN	MINIMUM
MLLW	MEAN LOWER LOW WATER
MSF	1000 SQUARE FEET
MSE	MECHANICALLY STABILIZED EARTH
MTL	MATERIAL (S)
N	
N	NORTH
NFS	NON FROST SUSCEPTIBLE
NIC	NOT IN CONTRACT
NO	NUMBER
NTS	NOT TO SCALE
O	
OBD	OVERBURDEN
OC	ON CENTER
OD	OUTSIDE DIAMETER
OG	ORIGINAL GOUND
OHE	OVERHEAD ELECTRICAL
OS	OWNER SUPPLIED
OWS	OIL-WATER SEPARATOR
OPP	OPPSITE
P	
P	PIPE
PC	POINT OF CURVATURE, PIECE
PCC	PRECAST CONCRATE
	POINT OF COMPOUND CURVATURE
PE	POLYETHYLENE
PED	PEDESTAL
PER	PERIMETER
PERF	PERFORATE (D)
PI	POINT OF INTERSECTION
PLWD	PLYWOOD
PL	PROPERTY LINE, PLATE
POC	POINT OF CURVE
PP	POLYPROPYLENE
PRC	POINT OF REVERSE CURVATURE
PROJ	PROJECT
PRKG	PARKING
PRV	PRESSURE REDUCING VALVE
PSI	POUND PER SQUARE INCH
PT	POINT, PRESSURE TREATED, POINT OF TANGENCY
PVC	POINT OF VERTICAL CURVATURE, POLY-VINYL CHLORIDE
PVI	POINT OF VERTICAL INTERSECTION
Q	
QTY	QUANTITY
R	
RAD	RADIUS
RE	RIM ELEVATION
REF	REFERENCE
REINF	REINFORCEMENT
REQD	REQUIRED
RET	RETAINING
RO	ROUGH OPENING
ROW	RIGHT OF WAY
S	
S	SOUTH
SCHED/SCH	SCHEDULE
SD	STORM DRAIN
SDI	STORM DRAIN INLET STRUCTURE
SDO	STORM DRAIN OUTLET STRUCTURE
SDR	STANDARD DIMENSION RATIO
SF	SQUARE FOOT
SHLDR	SHOULDER
SI	STREET INTERSECTION
SPEC	SPECIFICATION (S)
SQ	SQUARE
SRB	SHOT ROCK BORROW
SSC	SANITARY SEWER CONNECTION
SS	STAINLESS STEEL, SANITARY SEWER
SDMH	STORM DRAIN MANHOLE
SSMH	SANITARY SEWER MANHOLE
STA	STATION
STD	STANDARD
STL	STEEL
STRG	STRONG
SW	SIDEWALK
SWR	SEWER
SY	SQUARE YARD
SYM	SYMMETRICAL
T	
t	THICK
T&B	TOP AND BOTTOM
T&G	TONGUE AND GROOVE
TBC	TOP BACK OF CURB
TBD	TO BE DETERMINED
TBM	TEMPORARY BENCH MARK
TD	TRENCH DRAIN
TEL	TELEPHONE
TEMP	TEMPERATURE, TEMPORARY
TH	TEST HOLE
THK	THICK
TRANS	TRANSVERSE
TV	TELEVISION
TYP	TYPICAL
U	
UAMH	UTILITY ACCESS MANHOLE
UBC	UNIFORM BUILDING CODE
UE	UNDERGROUND ELECTRIC
UMC	UNIFORM MECHANICAL CODE
UHMW	ULTRA HIGH MOLECULAR WEIGHT
UON/UNO	UNLESS OTHERWISE NOTED
UPC	UNIFORM PLUMBING CODE
V	
VB	VALVE BOX
VERT	VERTICAL
VG	VALLEY GUTTER
W	
W	WEST
W/	WITH
WD	WOOD
WELDMT	WELDMENT
WL	WATERLINE
WQU	WATER QUALITY UNIT
WV	WATER VALVE
WW	WATER WATER
WWTP	WASTE WATER TREATMENT PLANT
W/O	WITHOUT
X	
XFMR	TRANSFORMER
<PT	ANGLE POINT

CITY & BOROUGH OF JUNEAU DOCKS & HARBORS

REVISIONS

REV.	DATE	DESCRIPTION	DWN.	CKD.	APP.

PND ENGINEERS, INC.
9360 Glacier Highway Ste 100
Juneau, Alaska 99801
Phone: 907-586-2093
Fax: 907-586-2099
www.pndengineers.com

DESIGN: CRS CHECKED: CRS
DRAWN: PJD APPROVED: CRS
SCALE: AS SHOWN

STATE OF ALASKA 49TH Charles R. Somerville CE-8845 REGISTERED PROFESSIONAL ENGINEER
DATE: 5/23/2019

DOWNTOWN WATERFRONT IMPROVEMENTS PHASE I
CBJ CONTRACT NO. DH19-014

SHEET TITLE: **GENERAL NOTES LEGEND AND ABBREVIATIONS**

PND PROJECT NO.: 182045 C.A.N. NO.: AECC250

G1.03

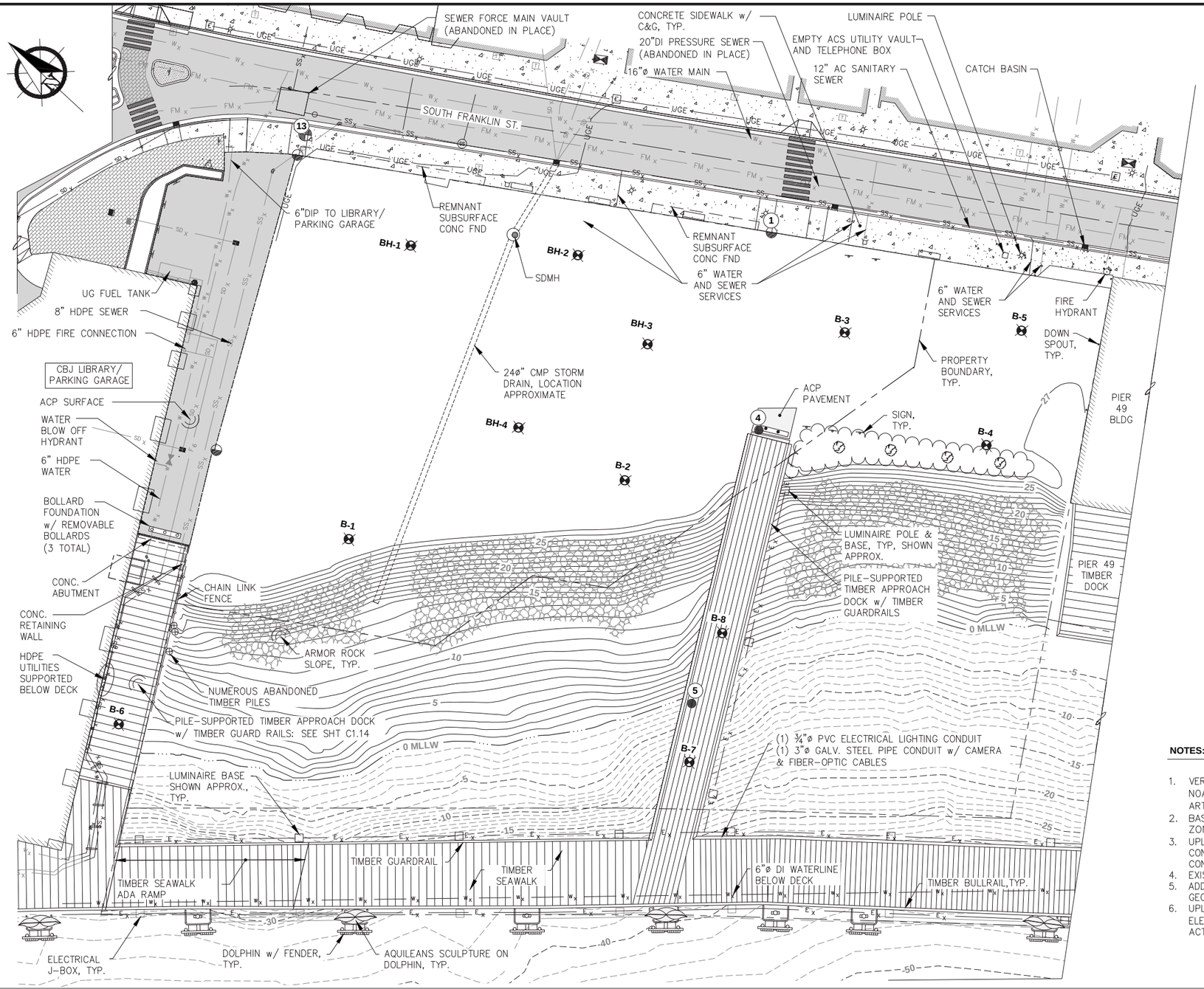

SURVEY CONTROL TABLE

POINT	NORTHING	EASTING	ELEV. (FT)	DESCRIPTION
1	2361748.24	2544358.72	27.63	FND RBR
4	2361701.84	2544298.28	27.89	PK NAIL
5	2361649.44	2544208.96	28.24	PK NAIL
13	2361898.34	2544259.15	28.26	FND MONUMENT

LEGEND

B-1 — **PND ENGINEERS, INC.: BOREHOLE, (2018)**

BH-1 — **PND ENGINEERS, INC.: BOREHOLE, (2016)**

NOTES:

1. VERTICAL DATUM IS MEAN LOWER LOW WATER (MLLW = 0 FEET) BASED ON A GPS RTK TIE TO NOAA BENCH MARK "2210 K 2011" LOCATED AT THE BASE OF A FLAGPOLE BY THE JUNEAU ARTS/CULTURE CENTER WITH A PUBLISHED ELEVATION OF 27.10' MLLW.
2. BASIS OF COORDINATES FOR THIS SURVEY ARE NAD 83 (2011) ALASKA STATE PLANE ZONE 1 IN U.S. SURVEY FEET.
3. UPLAND TOPOGRAPHY BASED UPON COMBINED FIELD SURVEYS BY PND ENGINEERS, INC. (PND) CONDUCTED IN 2017 AND 2018. BATHYMETRY BASED UPON COMBINED BATHYMETRIC SURVEYS CONDUCTED BY WILLIAMS AND ASSOCIATES, 2011 AND PND 2017.
4. EXISTING UTILITIES ARE SHOWN APPROXIMATELY BETWEEN SURVEY POINTS.
5. ADDITIONAL GEOTECHNICAL DATA IS AVAILABLE IN THE DOWNTOWN WATERFRONT IMPROVEMENTS GEOTECHNICAL REPORT, DATED APRIL 2019, PREPARED BY PND.
6. UPLANDS TOPOGRAPHIC CONTOURS UNAVAILABLE DUE TO ONGOING DEMOLITION ACTIVITIES. UPLAND ELEVATIONS TO VARY FROM +27' TO +29' MLLW FOLLOWING COMPLETION OF DEMOLITION ACTIVITIES.

CITY & BOROUGH OF JUNEAU — DOCKS & HARBORS

REVISIONS

REV.	DATE	DESCRIPTION	DWN.	CKD.	APP.

P N D ENGINEERS, INC.
9360 Glacier Highway Ste 100
Juneau, Alaska 99801
Phone: 907-586-2093
Fax: 907-586-2099
www.pndengineers.com

DESIGN: CRS CHECKED: CRS
DRAWN: PJD APPROVED: CRS
SCALE: SCALE IN FEET 0 20 40 FT.

STATE OF ALASKA 49TH — Charles R. Somerville CE-8845 — REGISTERED PROFESSIONAL ENGINEER
DATE: 5/23/2019

DOWNTOWN WATERFRONT IMPROVEMENTS PHASE I
CBJ CONTRACT NO. DH19-014

SHEET TITLE: **EXISTING CONDITIONS, SURVEY CONTROL AND BOREHOLE LOCATIONS**

PND PROJECT NO.: 182045 C.A.N. NO.: AECC250

G1.04

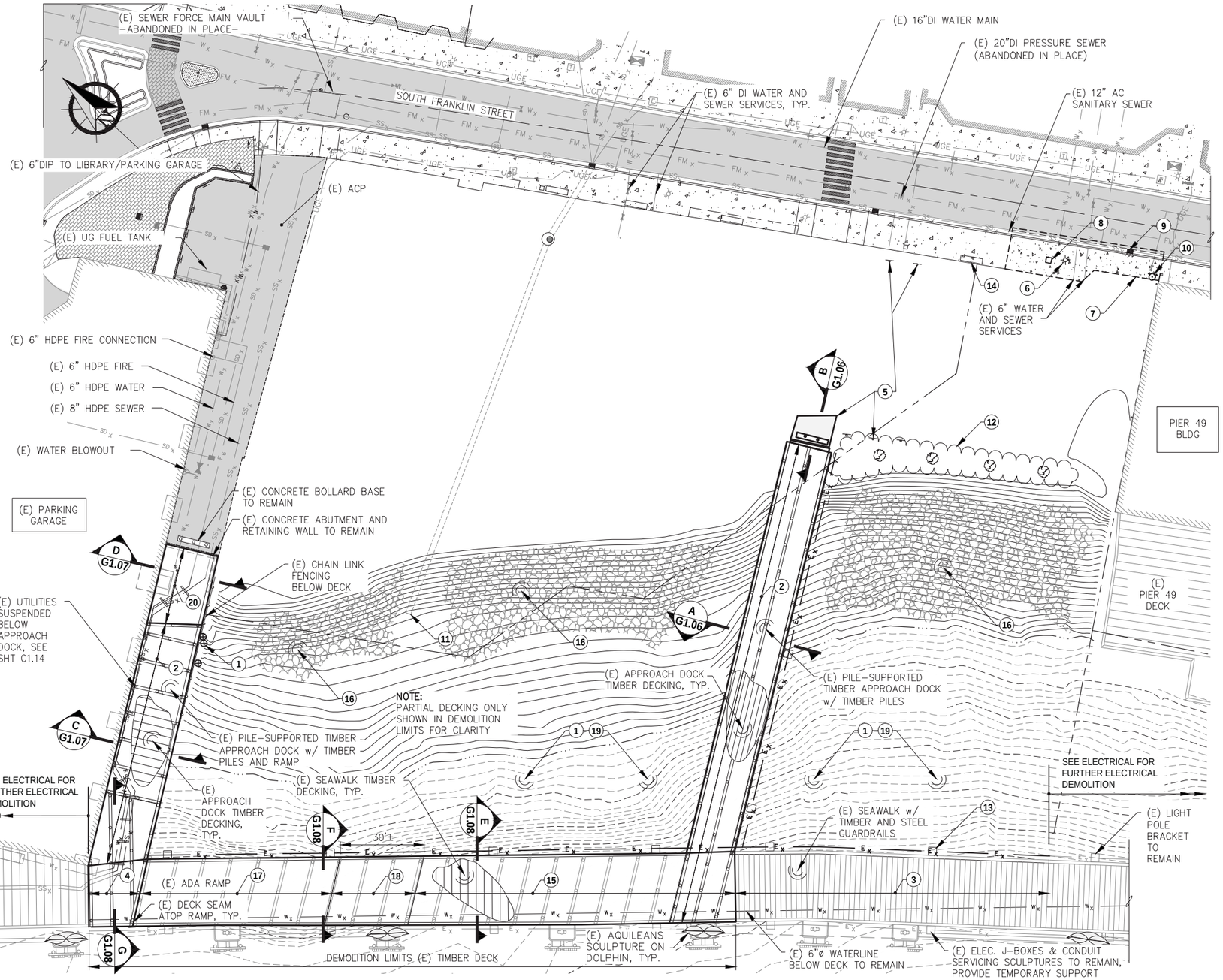

GENERAL NOTES

A	ALL DEMOLISHED TIMBER PILES, CAPS, STRINGERS, DECKING AND ASSOCIATED MATERIALS SHALL BECOME PROPERTY OF THE CONTRACTOR AND SHALL BE REMOVED FROM SITE AND DISPOSED.
B	(E) INDICATES EXISTING ENTITIES.
C	CONTRACTOR SHALL REMOVE ALL (E) PILES IN THEIR ENTIRETY BELOW NEW DOCK FRAMING LIMITS.
D	SAFETY BARRIERS SHALL BE PROVIDED ALONG (E) SEAWALK ONCE (E) GUARDRAIL IS REMOVED & SHALL REMAIN UNTIL PERMANENT IMPROVEMENTS ARE COMPLETED.
E	SEAWALK IS TO REMAIN OPEN TO PUBLIC DURING CONSTRUCTION. SHORT CLOSURES WILL BE EVALUATED ON A CASE BY CASE BASIS FOR SAFETY DURING CONSTRUCTION ACTIVITIES.

DEMOLITION SUMMARY

1	DEMOLISH ALL (E) ABANDONED TIMBER PILES & CONCRETE SECTIONS.
2	DEMOLISH (E) TIMBER DOCK INCLUDING ALL FENCING, DECKING, STRINGERS, CAPS, GUARDRAILS AND PILES; EXTRACT (E) TIMBER PILES IN THEIR ENTIRETY; TEMPORARILY SUPPORT (E) UTILITIES.
3	DEMOLISH (E) TIMBER & STEEL GUARDRAIL ALONG SHORE SIDE OF SEAWALK.
4	DEMOLISH (E) DECKING AND BULLRAIL
5	DEMOLISH (E) CONCRETE ABUTMENT & ACP; SALVAGE ALL SIGNS, BOLLARDS AND BOLLARD BASES.
6	SALVAGE (E) LUMINAIRE AND LIGHT POLE.
7	DEMOLISH (E) CONCRETE SIDEWALK, CURB AND GUTTER.
8	SALVAGE (E) ACS UTILITY VAULT – SEE ELECTRICAL PLANS.
9	DEMOLISH SD CATCH BASIN INLET FRAME AND GRATE, & SHORT SECTION OF CMP TO FIT NEW STORM DRAIN INLET FRAME & GRATE.
10	DEMOLISH (E) FIRE HYDRANT – SEE CIVIL PLANS.
11	DEMOLISH CORRODED END OF (E) CMP CULVERT TO LIMITS PER ENGINEER; MAINTAIN DRAINAGE WHILE CONSTRUCTING NEW WALL.
12	CLEAR & GRUB ALL (E) VEGETATION.
13	DEMOLISH ALL (E) SHORESIDE LUMINAIRE POLES AND LUMINAIRE BASES AND (E) ELECTRICAL CONDUITS & CONDUCTORS, SEE ELECTRICAL FOR FIBER OPTIC LINE SALVAGE.
14	SALVAGE ALL (E) BENCHES ALONG SIDEWALK (4 EA).
15	DEMOLISH (E) TIMBER DECKING, BULLRAIL, GUARDRAIL. SALVAGE ELEMENTS AS SHOWN IN DETAILS.
16	SALVAGE ALL (E) ARMOR ROCK, STOCKPILE ON–SITE AND REUSE.
17	SALVAGE (E) STRINGERS; DEMOLISH (E) DECKING, BULLRAILS & GUARDRAILS.
18	DEMOLISH (E) DECKING, STRINGERS, BULLRAILS & GUARDRAILS.
19	DEMOLISH ALL OBSTRUCTIONS WITHIN 5' OF SURFACE @ NEW PILE LOCATIONS
20	SALVAGE DECKING & STRINGERS; DEMOLISH GUARDRAIL, CAPS, FENCING AND PILES; SALVAGE ABUTMENT CONNECTION PLATES; PROVIDE TEMPORARY SUPPORT FOR (E) UTILITIES

DEMOLISH = REMOVE & DISPOSE AT CONTRACTOR PROVIDED DISPOSAL SITE.

SALVAGE = REMOVE, SAVE & SUITABLY STORE AT OWNER DESIGNATED LOCATION OR RELOCATE AS SHOWN ON PLANS. OWNER'S DESIGNATED STORAGE LOCATION SHALL BE WITHIN 5 MILES OF PROJECT SITE. CONTRACTOR SHALL BE RESPONSIBLE FOR ALL TRANSPORTING, LOADING, UNLOADING AND GENERAL HANDLING OF SALVAGED MATERIALS. STORAGE OF SALVAGED MATERIALS SHALL BE COORDINATED WITH THE OWNER AT ALL TIMES. SPECIFIC LOCATIONS FOR MATERIALS TO BE SALVAGED AND STORED SHALL BE DICTATED BY THE OWNER AND SHALL BE AT THE OWNER'S SOLE DISCRETION. THE CONTRACTOR SHALL BE RESPONSIBLE FOR ANY DAMAGE INCURRED DUE TO HIS ACTIVITIES. DAMAGED MATERIALS SHALL BE REPAIRED OR REPLACED AT NO COST TO THE OWNER.

CITY & BOROUGH OF JUNEAU – DOCKS & HARBORS

REVISIONS

REV.	DATE	DESCRIPTION	DWN.	CKD.	APP.

PND ENGINEERS, INC.
9360 Glacier Highway Ste 100
Juneau, Alaska 99801
Phone: 907-586-2093
Fax: 907-586-2099
www.pndengineers.com

DESIGN: MDS CHECKED: CRS
DRAWN: PJD APPROVED: CRS
SCALE: SCALE IN FEET 0 20 40 FT.

STATE OF ALASKA 49TH – Charles R. Somerville CE-8845 REGISTERED PROFESSIONAL ENGINEER
DATE: 5/23/2019

DOWNTOWN WATERFRONT IMPROVEMENTS PHASE I
CBJ CONTRACT NO. DH19-014

SHEET TITLE: **DEMOLITION SITE PLAN**

PND PROJECT NO.: 182045 C.A.N. NO.: AECC250

G1.05

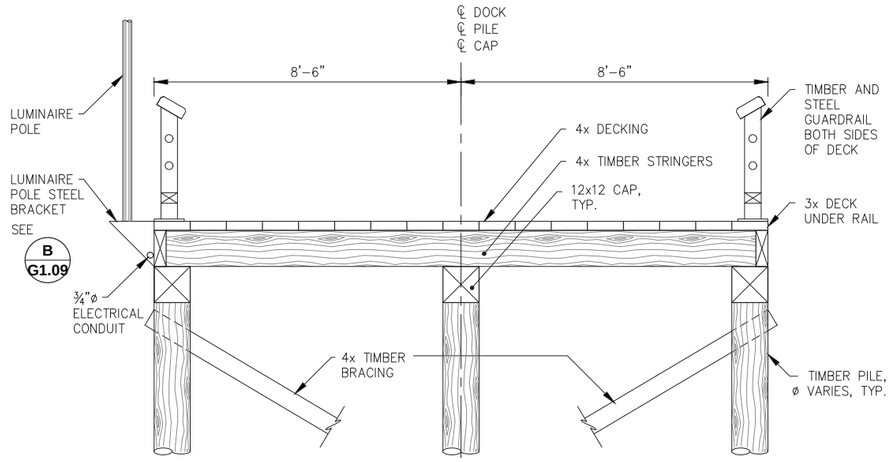

A G1.05 EXISTING APPROACH DOCK SECTION

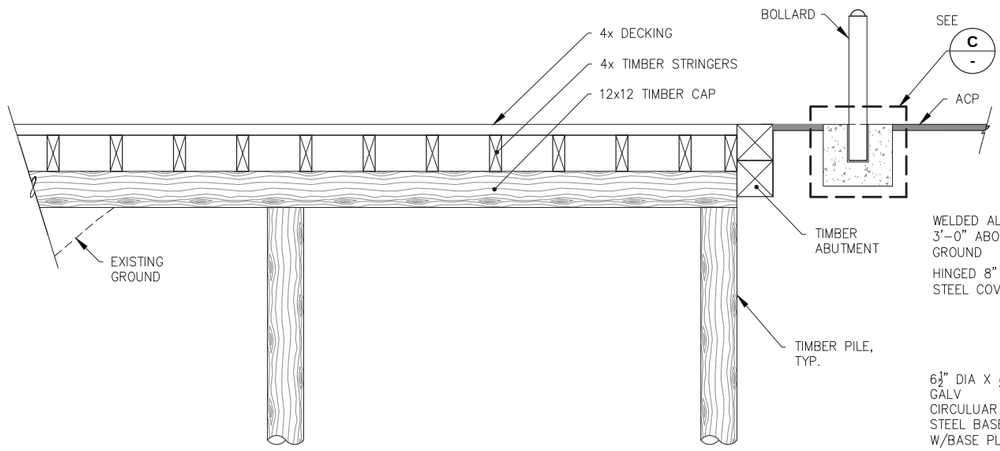

B G1.05 EXISTING APPROACH DOCK TIMBER ABUTMENT SECTION

NOTE:
GUARDRAIL, LUMINAIRE AND ELECTRICAL APPURTENANCES NOT SHOWN FOR CLARITY

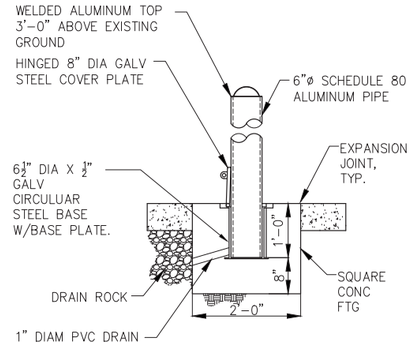

C BOLLARD BASE DETAIL

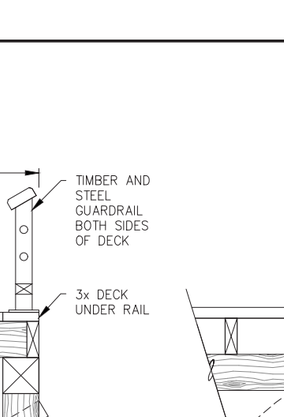

EXSTING APPROACH DOCK



EXISTING BOLLARDS AND ABUTMENT



EXISTING BOLLARDS AND APPROACH DOCK

CITY & BOROUGH OF JUNEAU DOCKS & HARBORS

REVISIONS

REV.	DATE	DESCRIPTION	DWN.	CKD.	APP.

P N D ENGINEERS, INC.
9360 Glacier Highway Ste 100
Juneau, Alaska 99801
Phone: 907-586-2093
Fax: 907-586-2099
www.pndengineers.com

DESIGN: MDS CHECKED: CRS
DRAWN: PJD APPROVED: CRS
SCALE: AS SHOWN
DATE: 5/23/2019

STATE OF ALASKA 49TH — Charles R. Somerville CE-8845 — REGISTERED PROFESSIONAL ENGINEER

DOWNTOWN WATERFRONT IMPROVEMENTS PHASE I
CBJ CONTRACT NO. DH19-014

SHEET TITLE: **DEMOLITION SECTIONS & PHOTOS**

PND PROJECT NO.: 182045 C.A.N. NO.: AECC250

G1.06

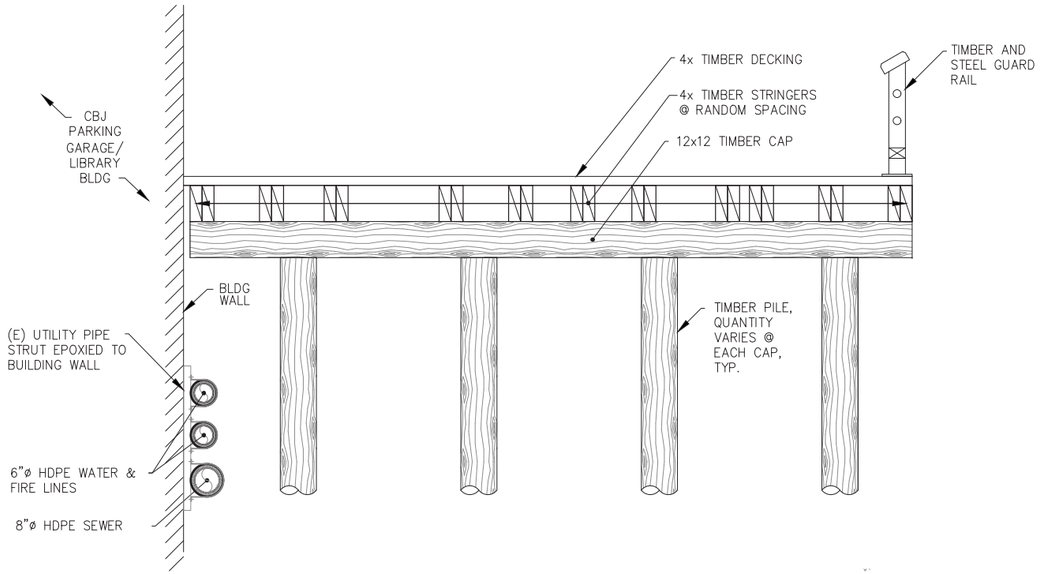

C G1.05 EXISTING APPROACH DOCK ADJACENT PARKING GARAGE SECTION

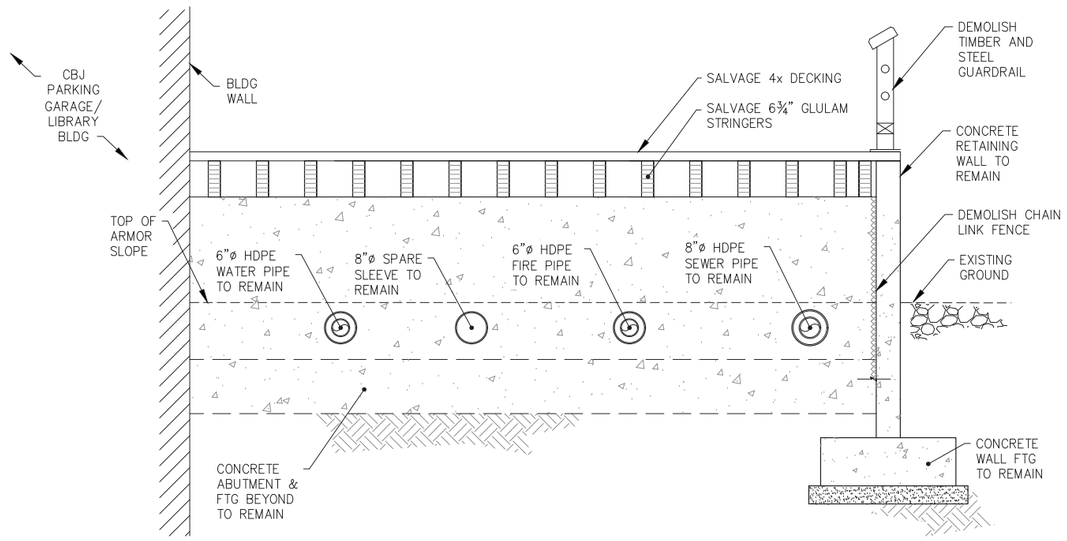

D G1.05 EXISTING APPROACH DOCK RAMP AT CONCRETE RETAINING WALL AND ABUTMENT SECTION

NOTE: STRINGERS AND CAPS ARE NOT PERPENDICULAR, AND ARE SHOWN APPROXIMATE. LOCATION, QUANTITY, SPACING AND ORIENTATION VARY THROUGHOUT STRUCTURE. DEMOLISH ALL.







EXISTING APPROACH DOCK & UTILITIES ADJACENT PARKING GARAGE

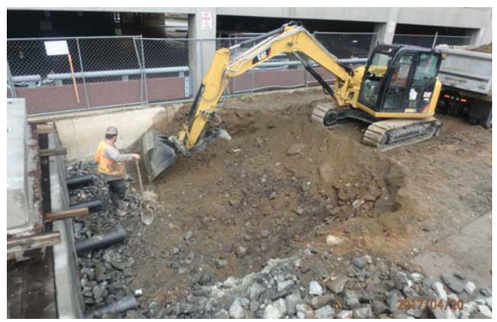



EXISTING ABUTMENT & UTILITIES ADJACENT PARKING GARAGE

NOTE: PHOTO DURING PRIOR CONSTRUCTION PROGRESS

REVISIONS

REV.	DATE	DESCRIPTION	DWN.	CKD.	APP.

P N D ENGINEERS, INC.
9360 Glacier Highway Ste 100
Juneau, Alaska 99801
Phone: 907-586-2093
Fax: 907-586-2099
www.pndengineers.com

DESIGN: MDS CHECKED: CRS
DRAWN: PJD APPROVED: CRS
SCALE: AS SHOWN
DATE: 5/23/2019

STATE OF ALASKA 49TH Charles R. Somerville CE-8845 REGISTERED PROFESSIONAL ENGINEER

DOWNTOWN WATERFRONT IMPROVEMENTS PHASE I
CBJ CONTRACT NO. DH19-014

SHEET TITLE: **DEMOLITION SECTIONS & PHOTOS**

G1.07

PND PROJECT NO.: 182045 C.A.N. NO.: AECC250

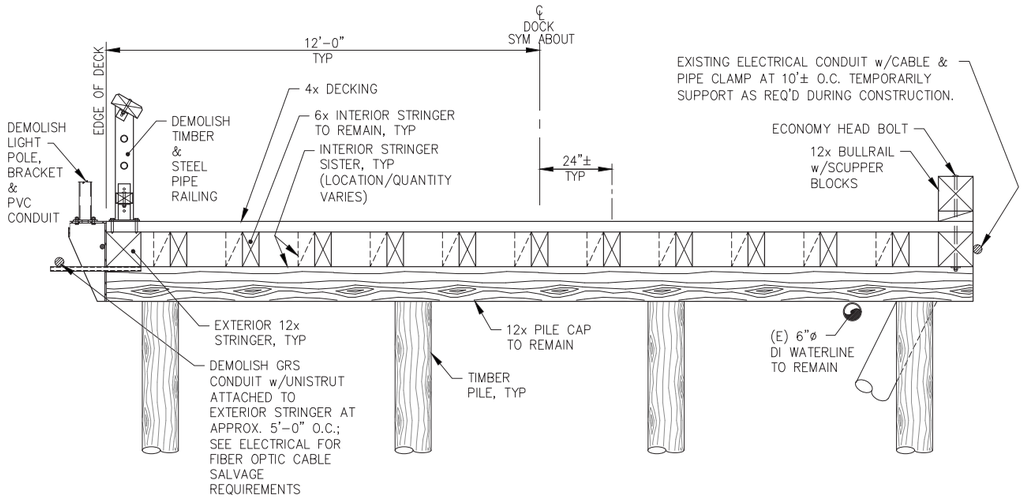

E G1.05 **SEAWALK SECTION**

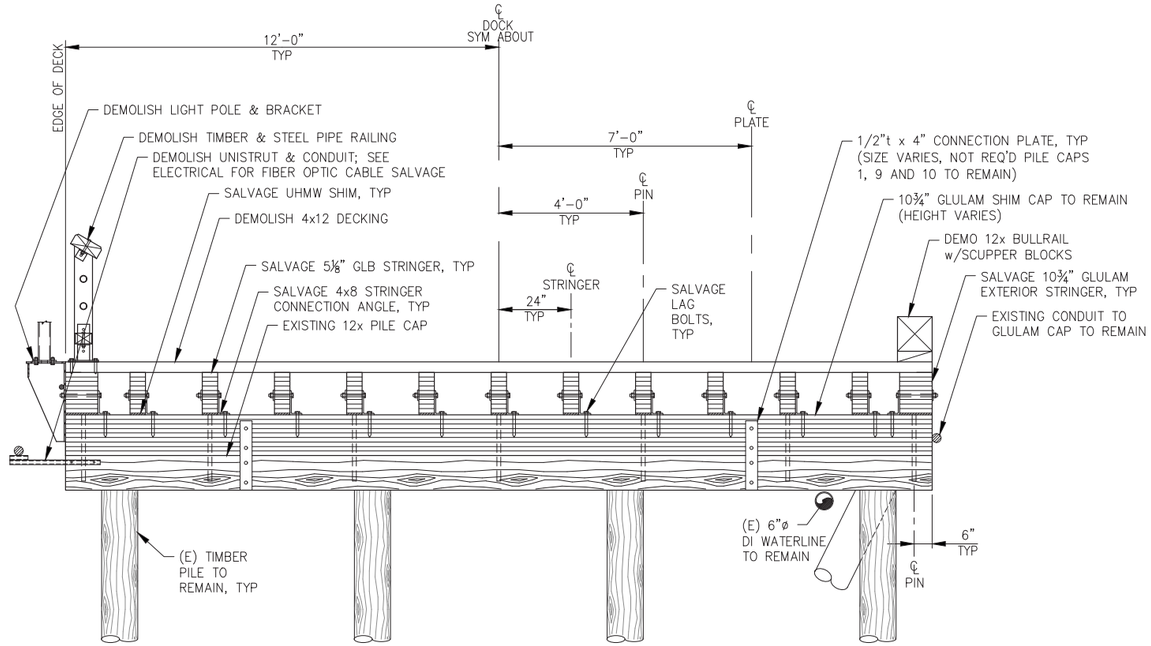

F G1.05 **SEAWALK SECTION**

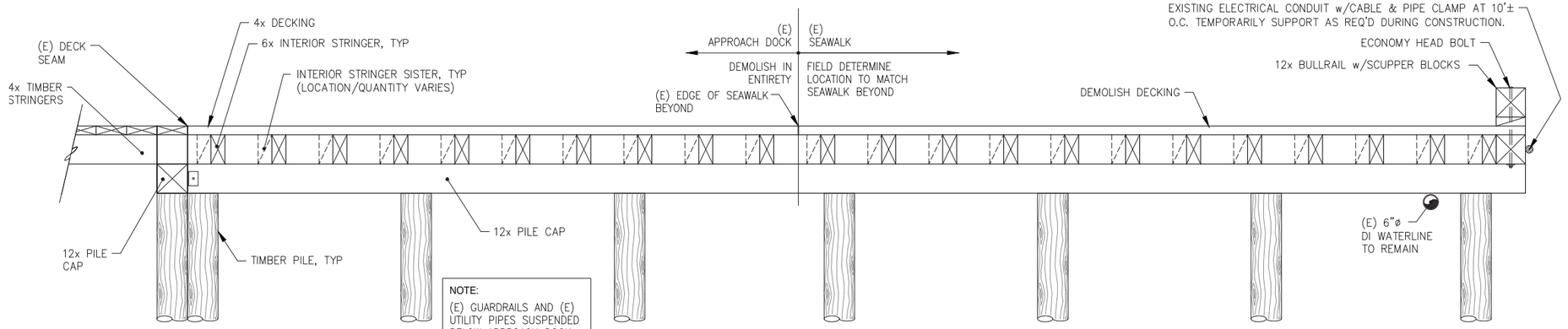

NOTE:
(E) GUARDRAILS AND (E) UTILITY PIPES SUSPENDED BELOW APPROACH DOCK DECK NOT SHOWN

G G1.05 **SEAWALK SECTION AT APPROACH DOCK**

DOCK MODIFICATIONS SCOPE OF IMPROVEMENTS

- REMOVE EXISTING GUARDRAIL, BULLRAIL & SCUPPER BLOCKS, LIGHT POLES, BRACKETS & CONDUIT AS REQUIRED. SUPPLY NEW HARDWARE FOR REINSTALLATION AS REQUIRED.
- SALVAGE EXISTING RAMP STRINGERS
- REMOVE AND DISPOSE EXISTING DECKING AND NON-RAMP STRINGERS IN THEIR ENTIRETY INCLUDING DRIFT PINS CONNECTING STRINGERS TO PILE CAPS. FILL HOLES IN EXISTING PILE CAPS TO REMAIN w/ COAL TAR MASTIC AND PLUG HOLES w/ TREATED DOWELS.
- MINOR MODIFICATION OF EXISTING BULLRAIL MAY BE REQUIRED FOR REINSTALLATION AND TO MATCH MODIFIED SLOPE OF DOCK.
- INSTALL NEW GLULAM CAPS, DECKING, SHIMS, CONNECTION ANGLES AND SALVAGED STRINGERS. AS SHOWN.
- CONTRACTOR SHALL VERIFY ALL FINAL ELEMENTS NOT SPECIFICALLY SHOWN AS REQUIRED TO PERFORM THE WORK.

NOTE:
(E) DOLPHIN NOT SHOWN

REVISIONS

REV.	DATE	DESCRIPTION	DWN.	CKD.	APP.

PND ENGINEERS, INC.
9360 Glacier Highway Ste 100
Juneau, Alaska 99801
Phone: 907-586-2093
Fax: 907-586-2099
www.pndengineers.com

DESIGN: MDS CHECKED: CRS
DRAWN: PJD APPROVED: CRS
SCALE: AS SHOWN
DATE: 5/23/2019

STATE OF ALASKA 49TH — Charles R. Somerville CE-8845 — REGISTERED PROFESSIONAL ENGINEER

DOWNTOWN WATERFRONT IMPROVEMENTS PHASE I
CBJ CONTRACT NO. DH19-014

SHEET TITLE: **DEMOLITION SECTIONS**

PND PROJECT NO.: 182045 C.A.N. NO.: AECC250

G1.08

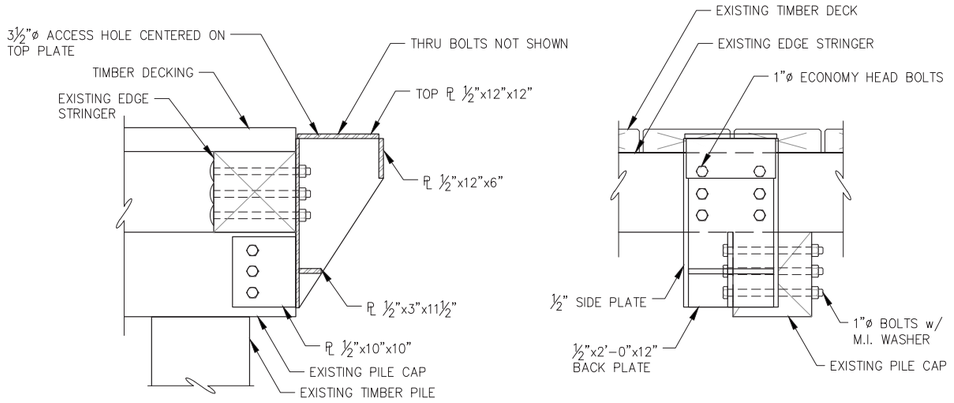

SECTION **ELEVATION**

A - EXISTING SEAWALK LIGHT POLE CONNECTION BRACKET

NOTE: GUARDRAIL & BULLRAIL NOT SHOWN FOR CLARITY.

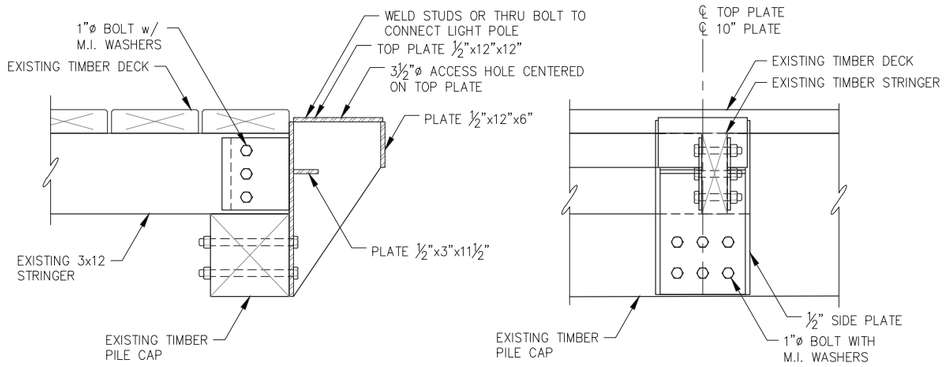

SECTION **ELEVATION**

B - TYPICAL APPROACH DOCK LIGHT POLE CONNECTION BRACKET

NOTE: GUARDRAIL NOT SHOWN FOR CLARITY

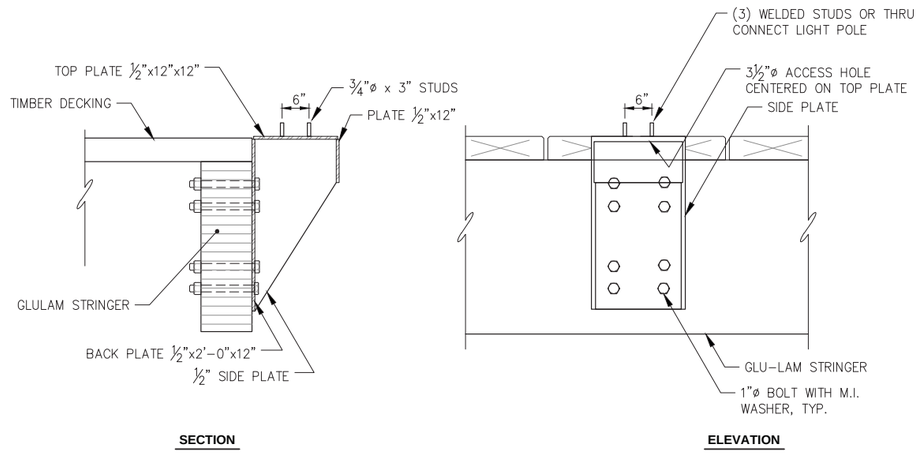

SECTION **ELEVATION**

C - EXISTING SEAWALK LIGHT POLE CONNECTION BRACKET

NOTE: GUARDRAIL & BULLRAIL NOT SHOWN FOR CLARITY.

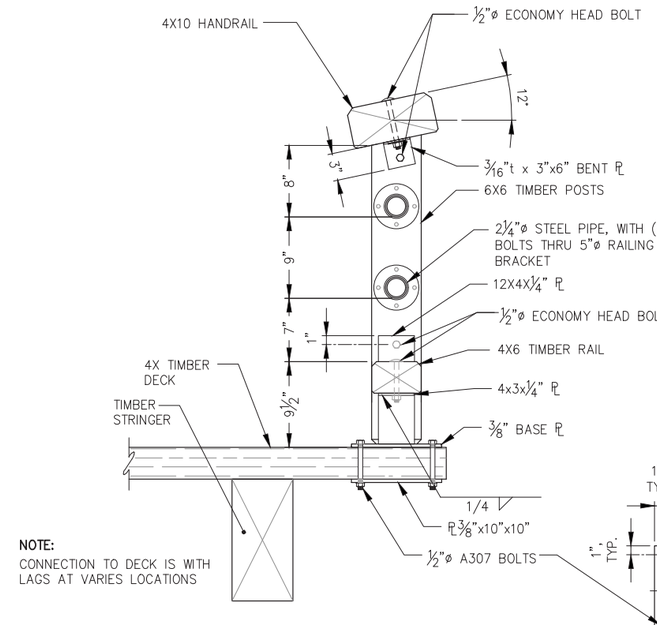

D - EXISTING GUARDRAIL DETAIL (SALVAGE)

E - BASE PLATE DETAIL

REVISIONS

REV.	DATE	DESCRIPTION	DWN.	CKD.	APP.

PND ENGINEERS, INC.
9360 Glacier Highway Ste 100
Juneau, Alaska 99801
Phone: 907-586-2093
Fax: 907-586-2099
www.pndengineers.com

DESIGN: MDS CHECKED: CRS
DRAWN: KLL APPROVED: CRS
SCALE: AS SHOWN
DATE: 5/23/2019

STATE OF ALASKA 49TH — Charles R. Somerville CE-8845 — REGISTERED PROFESSIONAL ENGINEER

DOWNTOWN WATERFRONT IMPROVEMENTS PHASE I
CBJ CONTRACT NO. DH19-014

SHEET TITLE: **DEMOLITION DETAILS**

PND PROJECT NO.: 182045 C.A.N. NO.: AECC250

G1.09

(E) SEWER FORCE MAIN VAULT –ABANDONED IN PLACE–
(E) 16"DI WATER MAIN
(E) 20"DI PRESSURE SEWER –ABANDONED IN PLACE–
(E) 6" DI WATER AND SEWER SERVICES
34' WIDE DRIVEWAY CURB CUT
COMMUNICATION VAULT, SEE ELECTRICAL
(E) 12" AC SANITARY SEWER
SOUTH FRANKLIN ST
(E) 6"DIP TO LIBRARY/ PARKING GARAGE
(E) PROPERTY LINE, TYP.
REMNANT (E) SUBSURFACE CONC. FND
(E) SDMH
(E) BENCH, TYP.
MARINE VIEW WAY
(E) UG FUEL TANK
(E) 6" HDPE FIRE CONNECTION
(E) 8" HDPE SEWER
(E) ACP SURFACING, TYP.
(E) WATER BLOWOUT
(E) 6" HDPE WATER
CBJ PARKING GARAGE/ LIBRARY
(E) REMOVABLE BOLLARDS
APPROX. FILL LIMITS, 27.0 CONTOUR
(E) CULVERT EXTENDED THROUGH WALL w/ 30"ø PIPE SLEEVE
PILE–SUPPORTED CONCRETE RETAINING WALL BELOW DECK
BACKFILL WALL w/ CLASS A SHOT ROCK BORROW TO ELEV. 27.0'
TIMBER PLANTER (SOILS & PLANTS **NIC**) TYP.
APPROACH DOCK TIMBER RAMP **(SEE S3.05)**
RELOCATED APPROACH DOCK UTILITIES TO CRUISE SHIP BERTH SUSPENDED BELOW DECKING **(SEE C1.15)**
ADA RAMP
GUARDRAIL
CONTRACTOR STAGING AREA AFTER APRIL 1, 2020
OVERDECK STAGE & STAIRWAY
RAISED SEAWALK STRINGERS & DECKING
GUARDRAIL
ADA RAMP
(E) SEAWALK WITH NEW DECKING
PILE–SUPPORTED TIMBER DECK **(SEE S3.01)**
(E) ELEL J–BOX AND CONDUIT SERVICING AQUILEANS SCULPTURES, TYP.
PILE–SUPPORTED CONCRETE DECK **(SEE S2.01)**
VEHICLE GUARDRAIL w/ INFILL PANELS
AQUILEANS SCULPTURE ON DOLPHIN, TYP.
(E) DOLPHIN w/ FENDER, TYP.
SEE ELECTRICAL FOR LIGHTING PLAN
(E) SEAWALK w/ NEW DECKING
RAISED SEAWALK DECKING & STRINGERS
SEE ELECTRICAL FOR LIGHTING PLAN
(E) 24"ø CMP
LUMINAIRE DESIGNATION, SEE SHT C1.03 FOR LAYOUT TABLE
CONTRACTOR STAGING AREA THROUGH APRIL 1, 2020 (INSIDE PROPERTY LINES)
CONCRETE PAVING, TYP.
PROPERTY LINE
SDMH
NEW FIRE HYDRANT
PLANTER (SOILS & PLANTS **NIC**) TYP.
CONCRETE PAVING
LIFT STATION
ELECTRICAL PANELS
CANOPY
CONC PLANTER (SOILS & PLANTS **NIC**)
ACCESS HATCH
DECK DRAIN, TYP.
ACCESS RAMP
UAMH
UAMH
OWS SDMH
LUMINAIRE POLE, TYP.
TRENCH DRAIN
PIER 49 BLDG
(E) ACP
PROPERTY LINE, TYP.
PIER 49 TIMBER DOCK
PHASE II SHELTER AND RESTROOMS BUILDING **(NIC)**
BLDG COL'S, TYP.
4' WIDE SWING GATE & WALKWAY
STRIPING, TYP.
VEHICLE GUARDRAIL
(E) TIMBER APPROACH DOCK
(E) LUMINAIRE POLE BRACKET

CITY & BOROUGH OF JUNEAU DOCKS & HARBORS

REVISIONS

REV.	DATE	DESCRIPTION	DWN.	CKD.	APP.

PND ENGINEERS, INC.
9360 Glacier Highway Ste 100
Juneau, Alaska 99801
Phone: 907-586-2093
Fax: 907-586-2099
www.pndengineers.com

DESIGN: MDS CHECKED: CRS
DRAWN: PJD APPROVED: CRS
SCALE: SCALE IN FEET 0 20 40 FT.

STATE OF ALASKA 49TH Charles R. Somerville CE-8845 REGISTERED PROFESSIONAL ENGINEER
DATE: 5/23/2019

DOWNTOWN WATERFRONT IMPROVEMENTS PHASE I
CBJ CONTRACT NO. DH19-014

SHEET TITLE: **OVERALL SITE PLAN**

G1.10

PND PROJECT NO.: 182045 C.A.N. NO.: AECC250

Attachment G – BLD2019-0321

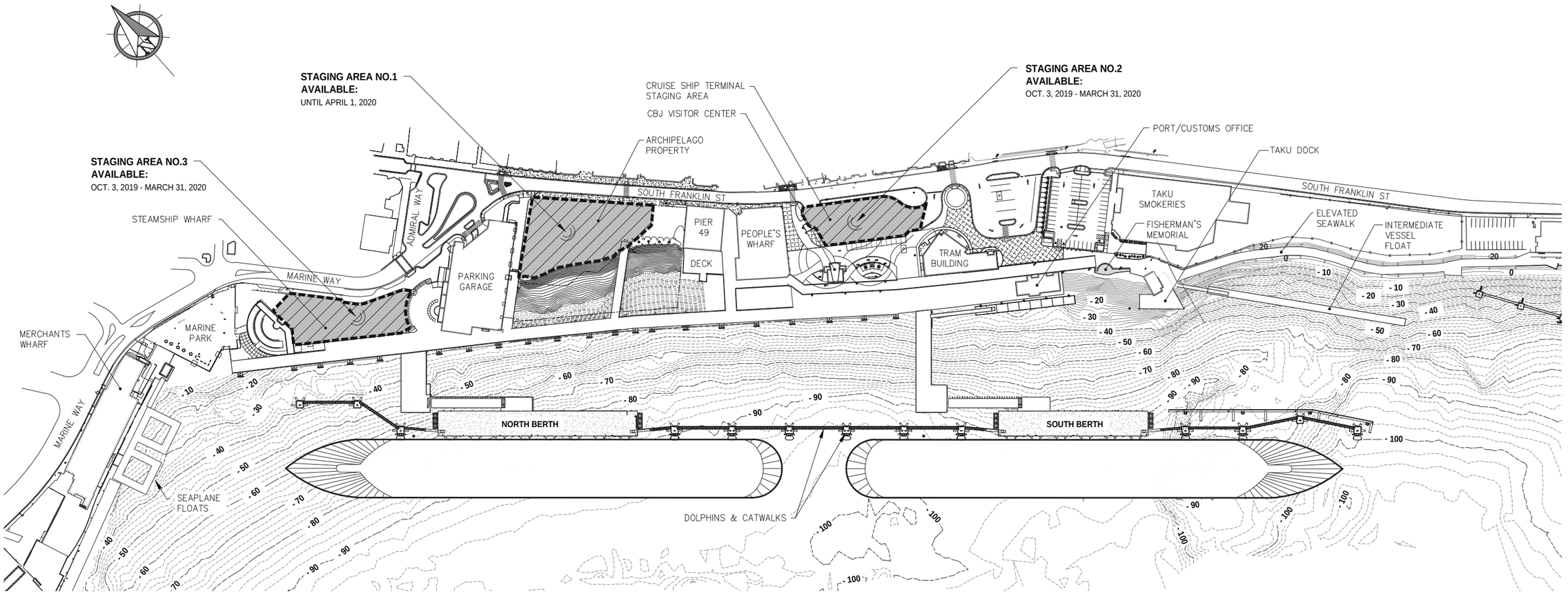

STAGING AREAS

NOTES:

1. CONTRACTOR SHALL INVENTORY EXISTING CONDITIONS WITH ENGINEER PRIOR TO USE OF ANY STAGING AREA. CONTRACTOR SHALL REPAIR ANY DAMAGES INCURRED AT STAGING AREAS DUE TO CONTRACTOR ACTIVITIES.
2. ADDITIONAL OFF-SITE STAGING AREA AVAILABLE AT "LITTLE ROCK DUMP". CONTACT PORT ENGINEER FOR DETAILS.
3. ALL OTHER STAGING AREAS SHALL BE PROVIDED BY THE CONTRACTOR.

CITY & BOROUGH OF JUNEAU — DOCKS & HARBORS

REVISIONS

REV.	DATE	DESCRIPTION	DWN.	CKD.	APP.

PND ENGINEERS, INC.
9360 Glacier Highway Ste 100
Juneau, Alaska 99801
Phone: 907-586-2093
Fax: 907-586-2099
www.pndengineers.com

DESIGN: CRS CHECKED: CRS
DRAWN: PJD APPROVED: CRS
SCALE: SCALE IN FEET 0 100 200 FT.

STATE OF ALASKA 49TH — Charles R. Somerville CE-8845 — REGISTERED PROFESSIONAL ENGINEER
DATE: 5/23/2019

DOWNTOWN WATERFRONT IMPROVEMENTS PHASE I
CBJ CONTRACT NO. DH19-014

SHEET TITLE: STAGING AREAS

PND PROJECT NO.: 182045 C.A.N. NO.: AECC250

G1.11

CONCRETE DECK, SEE C1.02 FOR GRADING PLAN EACH END OF BUILDING & FUTURE RESTROOM

RETAINING WALL BELOW

CJ, TYP.

DECK DRAIN, TYP.

CJ AT INSIDE EDGE OF RET. WALL, TYP.

ACCESS HATCH

CONCRETE PLANTER WALL, SEE STRUCTURAL

CONCRETE RAMP

CENTER BLDG COL., TYP.

FUTURE COVERED SHELTER & RESTROOMS BUILDING (NIC)
F.F. ELEV. = 28.57'

N:2361656.21
E:2544148.28

N:2361694.48
E:2544209.26

N:2361624.01
E:2544168.48

N:2361662.28
E:2544229.47

STRUCTURAL GRID, TYP.

(E) AQUILEANS SCULPTURE ON DOLPHIN

NEW TIMBER DECKING

(E) DOLPHIN, TYP.

CJ 6', TYP. EA WAY UON

SLOPING CONCRETE DECK

12' TYP. EA WAY UON

CJ, TYP.

PILES, PILE CAPS & RETAINING WALL BELOW, TYP.

TRENCH DRAIN
RE=27.15

UAMH
R.E.=27.25

SSMH
R.E.=27.27

LUMINAIRE POLE FND & HAND HOLE, TYP. SEE ELEC.

PROPERTY LINE

SEE STRIPING PLAN, TYP.

EDGE CONCRETE PAVING

CANOPY COLUMN, TYP

CANOPY ROOF OUTLINE

EJ, 4'x4'

OWS SDMH
R.E.=27.32

SDMH
R.E.=27.24

LUMINAIRE POLE FND & HAND HOLE, TYP. SEE ELEC.

34' WIDE DRIVEWAY CURB CUT

SAW CUT (1' OUTSIDE CURB)

SOUTH FRANKLIN ST

CONC BUMPER CURB, TYP.

SLOPING CONCRETE DECK

CJ AT INSIDE EDGE OF RET. WALL, TYP.

TRENCH DRAIN

PILE-SUPPORTED CONCRETE DECK

8"t CONCRETE PAVING

SEWER LIFT STATION

LUMINAIRE POLE FND

PLANTER

6" x 18" CONC CURB w/ 2" x 6" DRAINAGE SCUPPERS @ 6'-0" O.C. CENTERED BTWN GUARDRAIL POSTS, TYP. SEE STRUCTURAL

6" x 6" CONC CURB, TYP

TRENCH DRAIN
RE=27.15

GUARDRAIL POST, TYP

PROPERTY LINE, TYP.

SWING GATE

PIER 49 DECK

PIER 49 BLDG

ELECTRICAL/ CONTROLS ON STEEL RACK

LUMINAIRE POLE FND

4"t CONC PAVING, TYP.

VENT

(E) DOWN SPOUT TO REMAIN, TYP.

ADJUST VB TO FG

CONCRETE RAMP/ PLANTER ENLARGED PLAN

CONC CJ, TYP.

DECK DRAIN

PLANTER DRAIN, TYP. (3) EACH, LOCATE TO AVOID STRINGER CONFLICT

TOP WALL +32" ELEV. 31.20

PILE CAP BELOW

PLANTER

PLANTER/ SEATING WALL, SEE STRUCTURAL

ACCESS HATCH

RAMP

TOP WALL ELEV. 31.20

PROPERTY LINE

TOP OF WALL TRANSITION

TOP WALL ELEV. 29.50

TOP WALL +32" ELEV. 29.87

TOP WALL +6" ELEV. 27.73

EDGE CONC PAVING

REVISIONS					
REV.	DATE	DESCRIPTION	DWN.	CKD.	APP.

CITY & BOROUGH OF JUNEAU — DOCKS & HARBORS

P N D ENGINEERS, INC.

9360 Glacier Highway Ste 100
Juneau, Alaska 99801

Phone: 907-586-2093
Fax: 907-586-2099
www.pndengineers.com

STATE OF ALASKA — 49TH — Charles R. Somerville — CE-8845 — REGISTERED PROFESSIONAL ENGINEER

DESIGN: CRS CHECKED: CRS
DRAWN: PJD APPROVED: CRS
SCALE: SCALE IN FEET 0 10 20 FT.
DATE: 5/23/2019

DOWNTOWN WATERFRONT IMPROVEMENTS PHASE I
CBJ CONTRACT NO. DH19-014

SHEET TITLE: **PARTIAL SITE PLAN**

PND PROJECT NO.: 182045 C.A.N. NO.: AECC250

C1.01

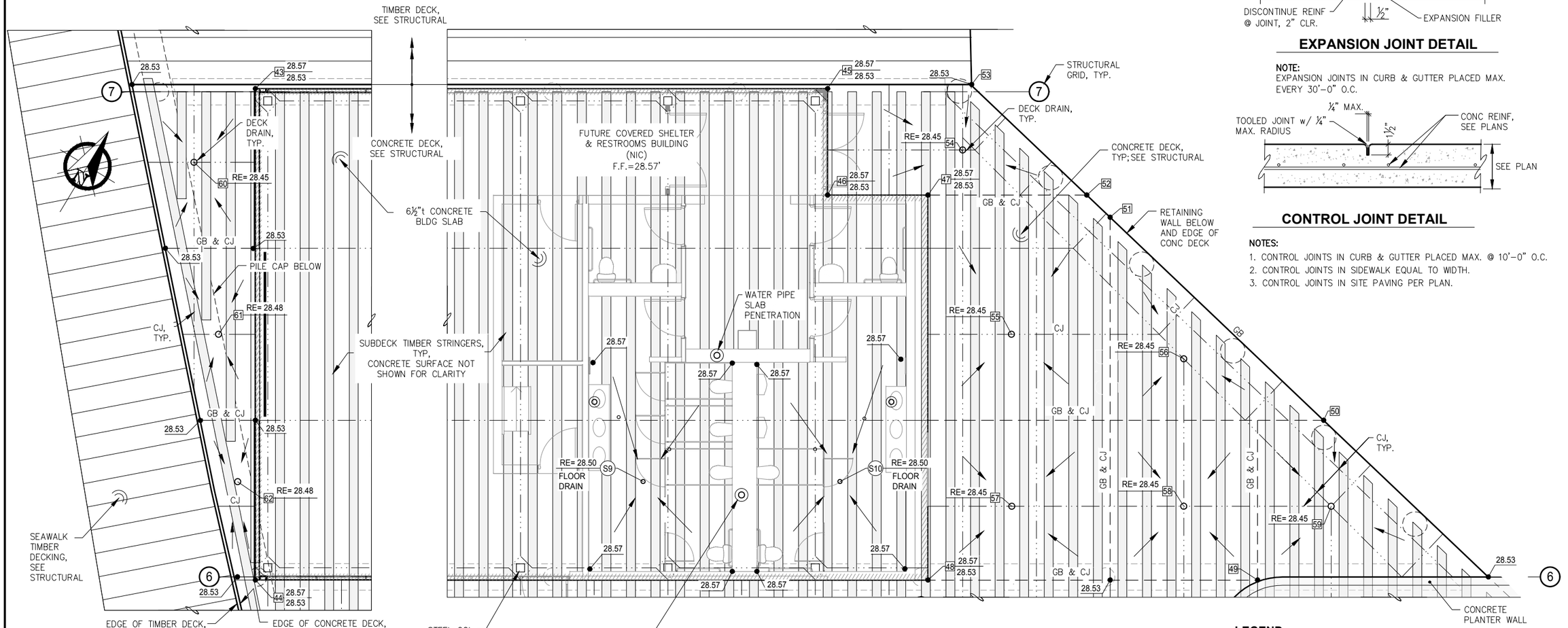
TIMBER DECK, SEE STRUCTURAL
CONCRETE DECK, SEE STRUCTURAL
FUTURE COVERED SHELTER & RESTROOMS BUILDING (NIC) F.F.=28.57'
6½"t CONCRETE BLDG SLAB
DECK DRAIN, TYP.
STRUCTURAL GRID, TYP.
CONCRETE DECK, TYP; SEE STRUCTURAL
RETAINING WALL BELOW AND EDGE OF CONC DECK
PILE CAP BELOW
SUBDECK TIMBER STRINGERS, TYP, CONCRETE SURFACE NOT SHOWN FOR CLARITY
WATER PIPE SLAB PENETRATION
GB & CJ
CJ, TYP.
CJ
RE= 28.45
RE= 28.48
RE= 28.50
FLOOR DRAIN
SEAWALK TIMBER DECKING, SEE STRUCTURAL
EDGE OF TIMBER DECK, SEE STRUCTURAL
EDGE OF CONCRETE DECK, SEE STRUCTURAL
STEEL COL. STUB THROUGH DECK, TYP; SEE STRUCTURAL
SEWER PIPE SLAB PENETRATION, TYP.
CONCRETE PLANTER WALL
28.53
28.57
28.57
28.53
28.53
28.53

POINT LAYOUT TABLE

POINT	NORTHING	EASTING	ELEV. (FEET)	DESCRIPTION
1	2361674.95	2544277.63	27.35	CDE/ END WALL
2	2361665.52	2544262.59	27.53	CDE/ PT
3	2361660.12	2544258.39	27.58	CDE/ PC, CURB
4	2361652.24	2544255.84	27.66	CDE/ PT, CURB
5	2361646.84	2544251.64	27.73	CDE/ PC, CURB
6	2361619.88	2544208.66	28.25	CDE/ PT, CURB
7	2361586.19	2544203.53	-	CDE/ PC, CURB
8	2361572.69	2544215.08	-	CDE/ END CURB
9	2361563.47	2544222.96	-	CDE/ END CURB
10	2361544.56	2544239.15	-	CDE/ PT, CURB
11	2361538.49	2544265.08	-	CDE/ PC, CURB
12	2361617.85	2544392.08	27.65	EC/ PC, CURB
13	2361621.27	2544395.89	27.70	EC/ GB, CURB
14	2361629.27	2544399.05	27.62	EC/ PT, CURB
15	2361631.60	2544399.25	27.60	EC/ PC, CURB
16	2361645.30	2544407.62	27.45	EC/ PT, CURB
17	2361653.78	2544421.13	27.45	EC/ SW JOINT
18	2361631.13	2544414.20	28.10	TOP CURB, INTERSECT
19	2361643.12	2544433.30	28.10	TOP CURB, INTERSECT
20	2361647.87	2544442.76	27.08/ME	END CURB, PVMNT JOINT
21	2361656.52	2544436.89	-	END CURB TRANSITION, EDGE INLET
22	2361694.86	2544411.35	27.22/ME	END CURB TRANSITION, ACP JOINT
23	2361682.16	2544402.39	27.51	EC/ SW JOINT
24	2361668.98	2544381.38	27.50	EC/ PT
25	2361666.13	2544367.73	27.70	EC/ PC
26	2361668.74	2544354.83	27.60	EC
27	2361678.90	2544304.66	27.23	EC/ END WALL
28	2361689.68	2544306.84	29.50	TOP/ END WALL
29	2361694.11	2544284.96	-	RBC/ PT, WALL

POINT LAYOUT TABLE (CONT.)

POINT	NORTHING	EASTING	ELEV. (FEET)	DESCRIPTION
30	2361693.25	2544280.22	-	RBC/ PT WALL
31	2361681.87	2544262.08	28.53	CDE/ PT, WALL
32	2361674.29	2544260.34	-	PC, WALL
33	2361673.33	2544260.94	28.47	CDE/ COR WALL
34	2361668.25	2544264.13	28.41	CDE/ CURB JOINT
35	2361684.49	2544278.73	27.37	LANDING
36	2361678.14	2544282.71	27.29	LANDING
37	2361679.95	2544285.60	27.26	CDE/ PC, WALL
38	2361681.28	2544292.90	27.20	CDE/ PT, WALL
39	2361679.34	2544296.05	27.15	END TD GRATE
40	2361592.94	2544350.26	27.15	END TD GRATE
41	2361646.91	2544424.16	-	CENTER COMMUNICATION VAULT
42	SEE WATER & SEWER UTILITY PLAN			FIRE HYDRANT
43	2361656.52	2544146.90	-	BUILDING COR
44	2361622.64	2544168.16	-	BUILDING COR
45	2361695.85	2544209.58	-	BUILDING COR
46	2361688.51	2544214.19	-	BUILDING COR
47	2361692.85	2544221.10	-	BUILDING COR
48	2361666.31	2544237.76	-	BUILDING COR
49	2361680.57	2544260.49	28.53	CDE/ GB INTERSECTION
50	2361694.44	2544258.14	28.53	CDE/ GB INTERSECTION
51	2361699.21	2544234.63	28.53	CDE/ GB
52	2361699.73	2544232.06	28.53	CDE/ GB
53	2361702.37	2544219.34	28.53	CDE/ TDE JOINT
54	2544221.56	2361697.47	-	DD
55	2361686.87	2544232.89	-	DD
56	2361692.63	2544245.84	-	DD
57	2361675.03	2544240.36	-	DD
58	2361682.47	2544252.22	-	DD
59	2361688.84	2544262.38	-	DD
60	2361648.78	2544145.85	-	DD
61	2361637.99	2544154.99	-	DD
62	2361628.65	2544162.68	-	DD
63	2361676.22	2544276.83	27.37	BOTTOM RAMP, GB LANDING
64	2361681.30	2544273.64	27.43	BOTTOM RAMP, GB LANDING
65	2361651.47	2544138.21	28.53	CDE, COR
66	2361528.40	2544249.51	28.53	CDE, COR
67	2361674.90	2544324.41	27.40	EC

LUMINAIRE POINT LAYOUT TABLE

POINT	NORTHING	EASTING	FND TYPE	FOUNDATION DESCRIPTION
1	2361677.53	2544321.50	TYPE 6	CONCRETE FND
2	2361671.89	2544223.99	TYPE 4	CONCRETE FND
3	2361630.77	2544223.99	TYPE 4	CONCRETE FND
4	2361783.75	2544046.93	TYPE 5	STEEL BRACKET
5	LUMINAIRE LOCATIONS 5,6,7,8,9 AND 10 TO BE FIELD DETERMINED PER DIRECTION OF ENGINEER		TYPE 3	STEEL BRACKET
6			TYPE 3	STEEL BRACKET
7			TYPE 3	STEEL BRACKET
8			TYPE 3	STEEL BRACKET
9			TYPE 3	STEEL BRACKET
10			TYPE 3	STEEL BRACKET
11	2361552.09	2544289.16	TYPE 1	STEEL BRACKET
12	2361577.58	2544329.83	TYPE 1	STEEL BRACKET
13	2361600.00	2544364.00	TYPE 1 SIM	STEEL BRACKET
14	2361623.12	2544398.75	TYPE 7	CONCRETE FND
15	2361650.19	2544421.39	TYPE 7	CONCRETE FND
16	2361685.45	2544398.23	TYPE 6	CONCRETE FND

NOTES :

1. SEE ELECTRICAL FOR LUMINAIRE DETAILS.
2. SEE SHT G1.10 FOR LUMINAIRE LOCATIONS.
3. SEE SHEET S1.07, S1.08, AND C1.06 FOR FOUNDATION DETAILS
4. TYPE 2 LIGHT POLE BASES SHALL BE USED AT ALL EXISTING LIGHT POLE FOUNDATIONS THAT HAVE NEW LIGHT POLES INSTALLED, SEE ELECTRICAL FOR LOCATIONS.

POINT TABLE ABBREVIATIONS:

- CDE CONCRETE DECK ELEVATION
- COR CORNER
- DD DECK DRAIN
- EC EDGE OF CONCRETE PAVING
- FD FLOOR DRAIN
- GB GRADE BREAK
- ME MATCH EXISTING
- PC POINT OF CURVATURE
- POC POINT ON CURVE
- PT POINT OF TANGENCY
- RE RIM ELEVATION
- RBC ROADWAY BASE COURSE
- SW SIDEWALK
- TD TRENCH DRAIN
- TDE TIMBER DECK ELEVATION

NOTES:

1. TABLE ELEVATIONS AT MATCH POINTS ARE SHOWN FOR REFERENCE PURPOSES ONLY, MATCHING EXISTING SURFACES SHALL TAKE PRECEDENCE, NOTIFY ENGINEER PRIOR TO GRADING OF ANY SUBSTANTIAL DISCREPANCIES (± 0.02').
2. ELEVATIONS PROVIDED THIS SHEET FOR POINTS ADJACENT TO CURB INLETS DO NOT REFLECT LOCAL CURB DEPRESSIONS AS REQUIRED IAW CBJ STD 310. SEE STORM DRAIN PLAN.

CITY & BOROUGH OF JUNEAU DOCKS & HARBORS

REVISIONS

REV.	DATE	DESCRIPTION	DWN.	CKD.	APP.

PND ENGINEERS, INC.
9360 Glacier Highway Ste 100
Juneau, Alaska 99801
Phone: 907-586-2093
Fax: 907-586-2099
www.pndengineers.com

DESIGN: CRS CHECKED: CRS
DRAWN: PJD APPROVED: CRS
SCALE: SCALE IN FEET 0 10 20 FT.

STATE OF ALASKA 49TH Charles R. Somerville CE-8845 REGISTERED PROFESSIONAL ENGINEER
DATE: 5/23/2019

DOWNTOWN WATERFRONT IMPROVEMENTS PHASE I
CBJ CONTRACT NO. DH19-014

SHEET TITLE: **POINT LAYOUT TABLES**

PND PROJECT NO.: 182045 C.A.N. NO.: AECC250

C1.03

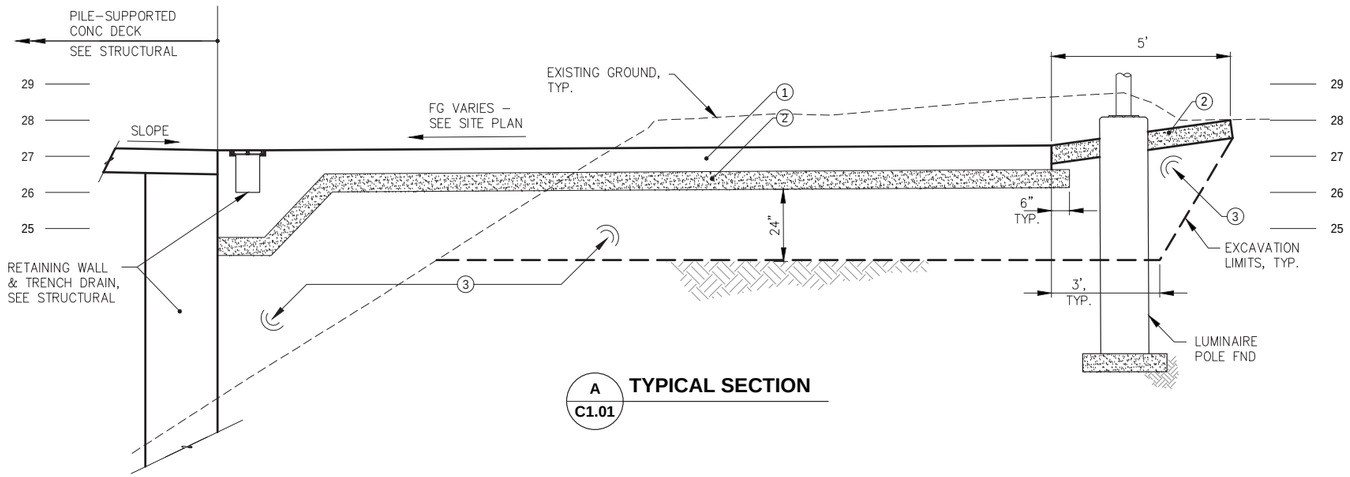

A C1.01 TYPICAL SECTION

MATERIAL SCHEDULE	
SYMBOL	MATERIAL DESCRIPTION
①	8"t CONCRETE PAVING w/ NO.7 BARS @ 12" O.C. EACH WAY
②	6"t LAYER ROADWAY BASE COURSE, OR DEPTH AS SHOWN
③	CLASS A SHOT ROCK BORROW, THICKNESS AS SHOWN
④	4"t CONCRETE PAVING w/ NO.4 BARS @ 12" O.C. EACH WAY
⑤	VERTICAL CURB PER DTL; ELEVATION VARIES, SEE SITE PLAN
⑥	STANDARD CURB & GUTTER PER DOT/PF STD. DTL I.20.20
⑦	DEPRESSED CURB & GUTTER PER DOT/PF STD. DTL I.20.20

NOTES:
1. SEE SITE PLAN FOR PROJECT LIMITS
2. SEE POINT LAYOUT FOR FINAL GRADES
3. REMOVE AND DISPOSE OF UNSUITABLE EXCAVATED MATERIAL INCLUDING ORGANICS AND OTHER WASTE WITHIN FILL PRISM & AS DIRECTED BY ENGINEER.
4. SEE SITE PLAN FOR UTILITIES & STORM DRAINS.
5. PROTECT ALL CONCRETE EDGES FROM DAMAGE DUE TO CONSTRUCTION EQUIPMENT.

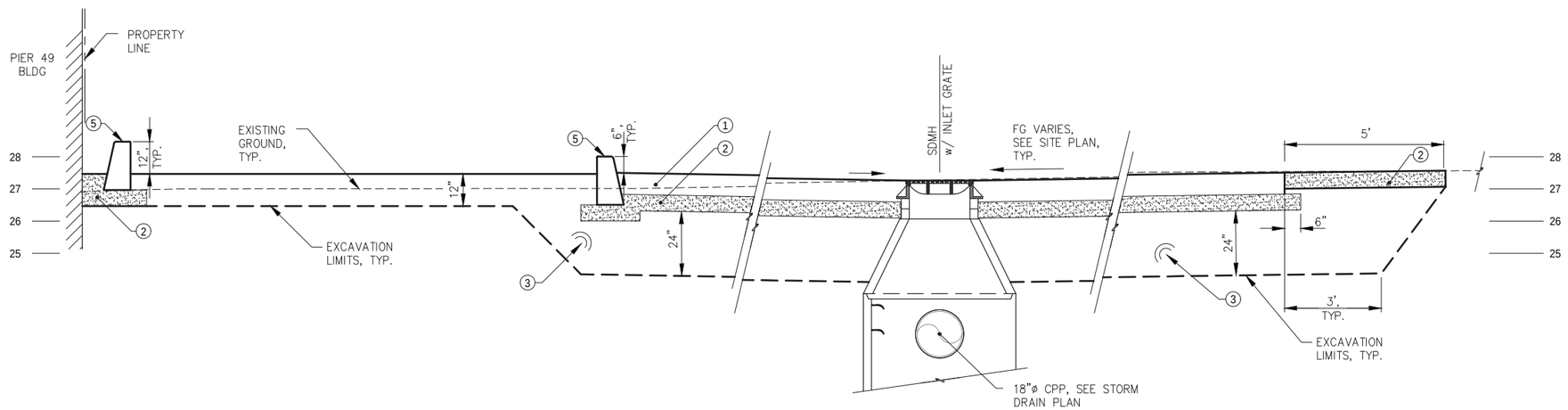

B C1.01 TYPICAL SECTION

DIAL BEFORE YOU DIG!
586-1333

UNDERGROUND POWER, TELEPHONE, T.V., COMMUNICATIONS, WATER AND SEWER LINES ARE IN THE AREA. UTILITIES SHOWN HERE DO NOT SUBSTITUTE FOR FIELD LOCATES.

CITY & BOROUGH OF JUNEAU – DOCKS & HARBORS

REVISIONS

REV.	DATE	DESCRIPTION	DWN.	CKD.	APP.

PND ENGINEERS, INC.
9360 Glacier Highway Ste 100
Juneau, Alaska 99801
Phone: 907-586-2093
Fax: 907-586-2099
www.pndengineers.com

DESIGN: CRS CHECKED: CRS
DRAWN: PJD APPROVED: CRS
SCALE: NTS
DATE: 5/23/2019

STATE OF ALASKA – 49TH – Charles R. Somerville – CE-8845 – REGISTERED PROFESSIONAL ENGINEER

DOWNTOWN WATERFRONT IMPROVEMENTS PHASE I
CBJ CONTRACT NO. DH19-014

SHEET TITLE: **TYPICAL SITE SECTIONS**

PND PROJECT NO.: 182045 C.A.N. NO.: AECC250

C1.04

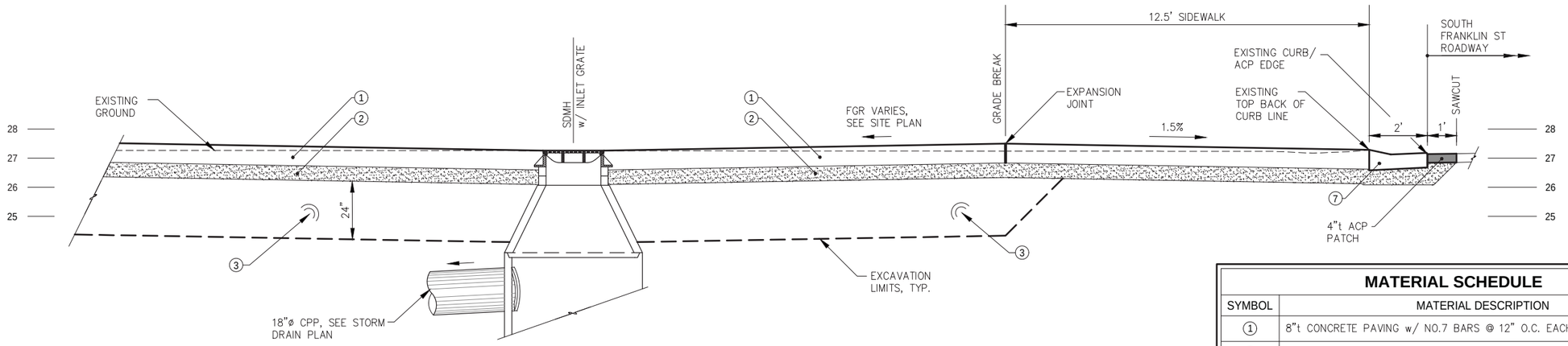

C C1.01 **TYPICAL SECTION**

DIAL BEFORE YOU DIG!
586-1333

UNDERGROUND POWER, TELEPHONE, T.V., COMMUNICATIONS, WATER AND SEWER LINES ARE IN THE AREA. UTILITIES SHOWN HERE DO NOT SUBSTITUTE FOR FIELD LOCATES.

MATERIAL SCHEDULE

SYMBOL	MATERIAL DESCRIPTION
①	8"t CONCRETE PAVING w/ NO.7 BARS @ 12" O.C. EACH WAY
②	6"t LAYER ROADWAY BASE COURSE, OR DEPTH AS SHOWN
③	CLASS A SHOT ROCK BORROW, THICKNESS AS SHOWN
④	4"t CONCRETE PAVING w/ NO.4 BARS @ 12" O.C. EACH WAY
⑤	VERTICAL CURB PER DTL; ELEVATION VARIES, SEE SITE PLAN
⑥	STANDARD CURB & GUTTER PER DOT/PF STD. DTL I.20.20
⑦	DEPRESSED CURB & GUTTER PER DOT/PF STD. DTL I.20.20

NOTES:
1. SEE SITE PLAN FOR PROJECT LIMITS
2. SEE POINT LAYOUT FOR FINAL GRADES
3. REMOVE AND DISPOSE OF UNSUITABLE EXCAVATED MATERIAL INCLUDING ORGANICS AND OTHER WASTE WITHIN FILL PRISM & AS DIRECTED BY ENGINEER.
4. SEE SITE PLAN FOR UTILITIES & STORM DRAINS.
5. PROTECT ALL CONCRETE EDGES FROM DAMAGE DUE TO CONSTRUCTION EQUIPMENT.

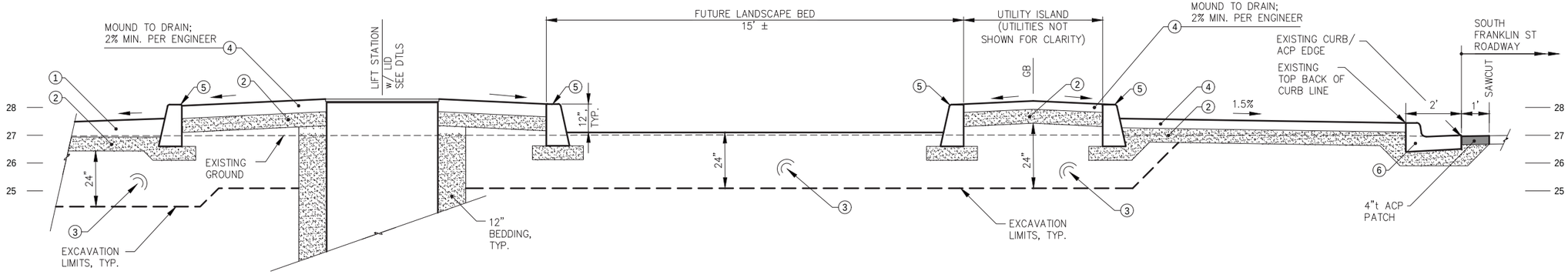

D C1.01 **TYPICAL SECTION**

REVISIONS

REV.	DATE	DESCRIPTION	DWN.	CKD.	APP.

PND ENGINEERS, INC.
9360 Glacier Highway Ste 100
Juneau, Alaska 99801
Phone: 907-586-2093
Fax: 907-586-2099
www.pndengineers.com

DESIGN: CRS CHECKED: CRS
DRAWN: PJD APPROVED: CRS
SCALE: AS SHOWN
DATE: 5/23/2019

STATE OF ALASKA 49TH Charles R. Somerville CE-8845 REGISTERED PROFESSIONAL ENGINEER

DOWNTOWN WATERFRONT IMPROVEMENTS PHASE I
CBJ CONTRACT NO. DH19-014

SHEET TITLE: **TYPICAL SITE SECTIONS**

PND PROJECT NO.: 182045 C.A.N. NO.: AECC250

C1.05

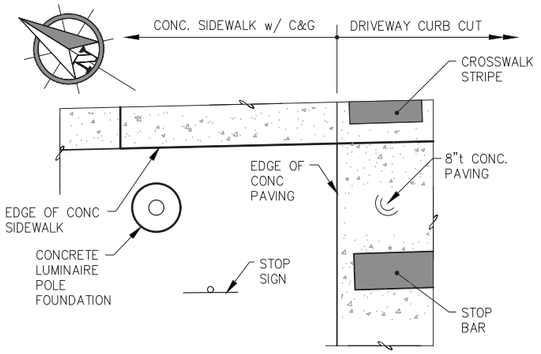

LUMINAIRE POLE PLAN AT ENTRANCE

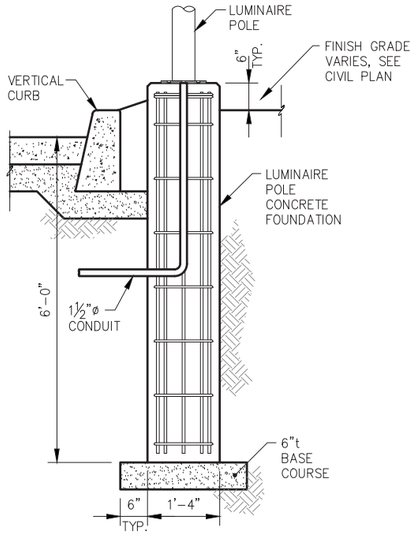

TYPICAL LUMINAIRE POLE PEDESTAL SECTION TYPE 6

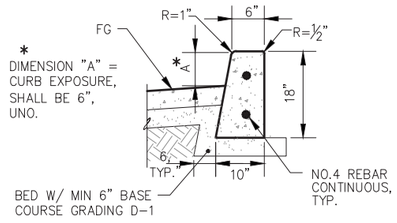

VERTICAL CURB DETAIL

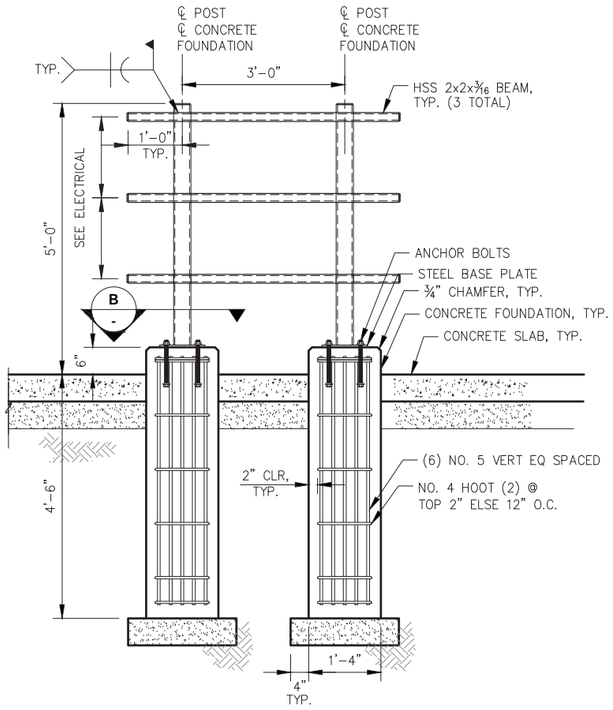

STEEL RACK FOUNDATION DETAILS

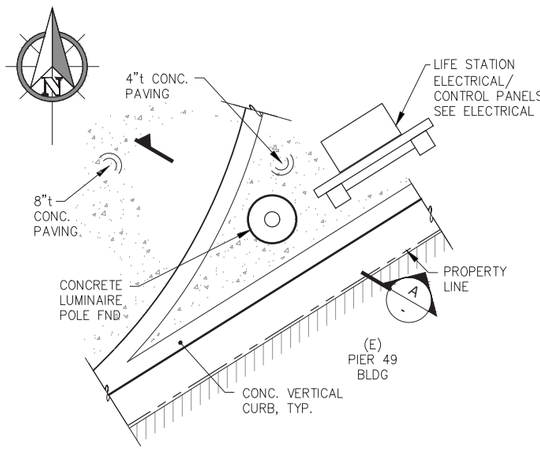

LUMINAIRE POLE PLAN AT PLANTER

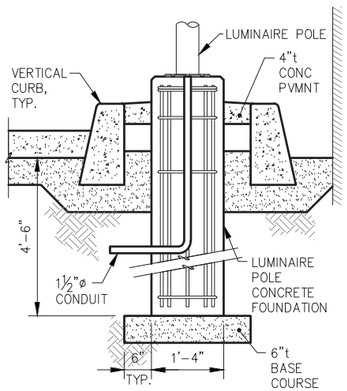

A LUMINAIRE PEDESTAL DETAIL TYPE 7

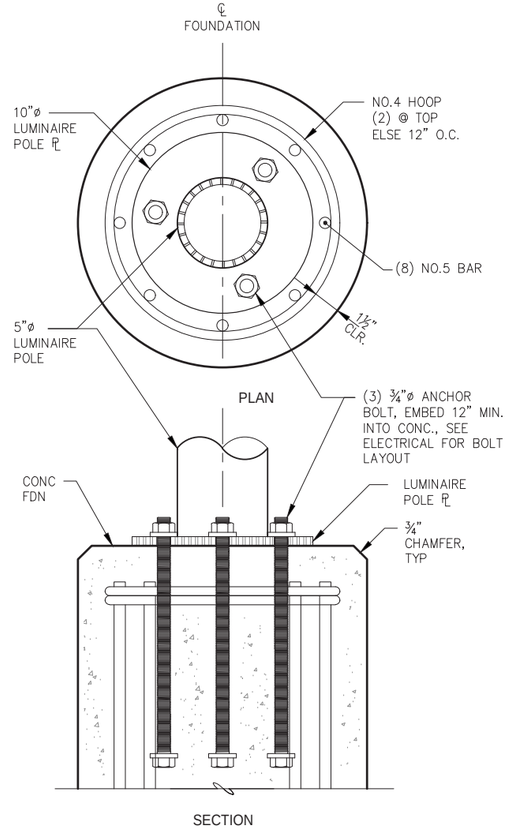

TYPICAL LUMINAIRE POLE FOUNDATION DETAILS

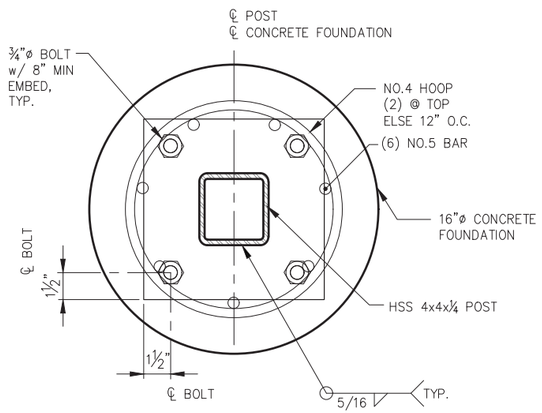

B - LUMINAIRE FOUNDATION DETAIL

NOTES:

1. SEE CIVIL SITE SECTIONS FOR DTLS NOT CALLED OUT.
2. SEE SITE GRADING PLAN FOR ELEVATIONS.
3. FOR LUMINAIRE PEDESTALS, HANDHOLDS AT EACH FOUNDATION BASE, SEE ELECTRICAL.
4. SEE LUMINAIRE FOUNDATION LAYOUT TABLE FOR COORDINATE LOCATIONS AND SIGNAGE AND STRIPING PLAN FOR SIGN COORDINATE LOCATION.

CITY & BOROUGH OF JUNEAU — DOCKS & HARBORS

REVISIONS

REV.	DATE	DESCRIPTION	DWN.	CKD.	APP.

PND ENGINEERS, INC.
9360 Glacier Highway Ste 100
Juneau, Alaska 99801
Phone: 907-586-2093
Fax: 907-586-2099
www.pndengineers.com

DESIGN: CRS CHECKED: CRS
DRAWN: PJD APPROVED: CRS
SCALE: AS SHOWN

STATE OF ALASKA 49TH — Charles R. Somerville CE-8845 REGISTERED PROFESSIONAL ENGINEER
DATE: 5/23/2019

DOWNTOWN WATERFRONT IMPROVEMENTS PHASE I
CBJ CONTRACT NO. DH19-014

SHEET TITLE: **CIVIL DETAILS**

PND PROJECT NO.: 182045 C.A.N. NO.: AECC250

C1.06

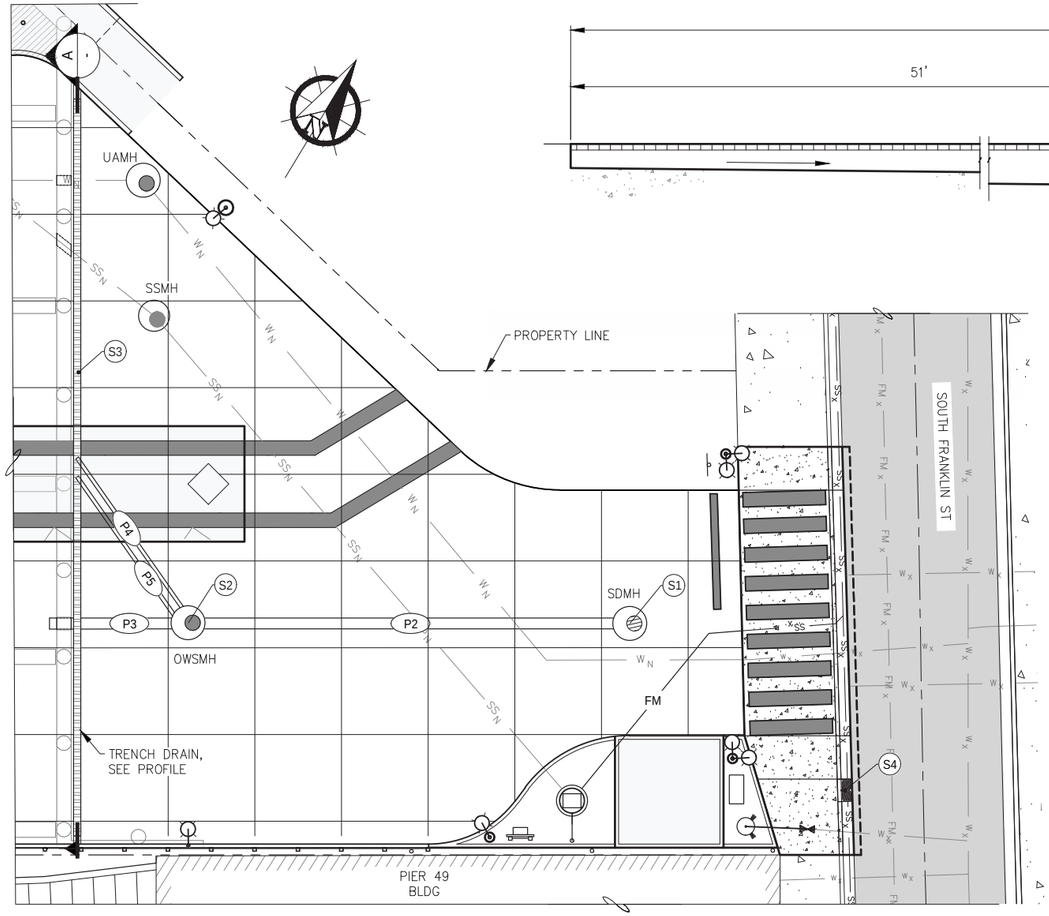

A **STORM DRAIN PARTIAL PLAN**
-

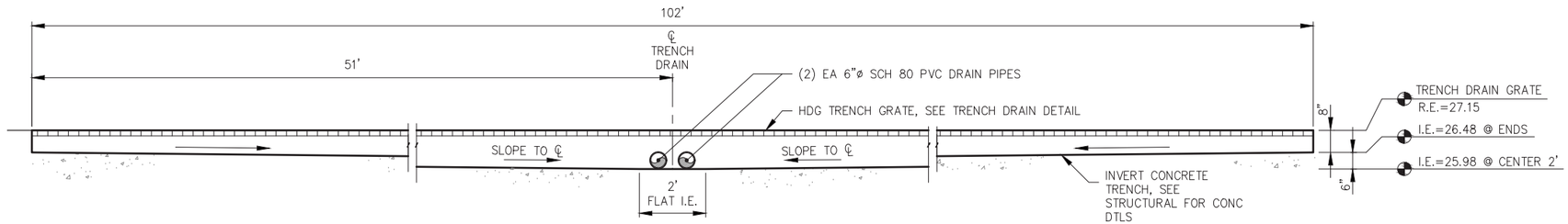

A **TRENCH DRAIN PROFILE**
NTS

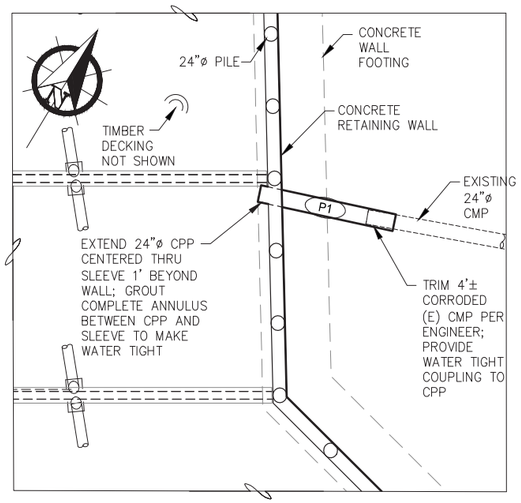

B **STORM DRAIN PARTIAL PLAN**
-

STORM DRAIN STRUCTURES

STRUCTURE DESIGNATION	NORTHING	EASTING	R.E. (FT)	DESCRIPTION
S1	2361658.50	2544399.45	27.24	CENTER SDMH TYPE I w/ TOP GRATE
S2	2361626.09	2544347.60	27.32	CENTER OWS SDMH TYPE I w/ SOLID LID
S3	SEE SITE PLAN C1.01		27.15	102 LF TD
S4	2361654.76	2544436.92	26.80 (FIELD VERIFY)	CENTER IB & CIFG PER DOT&PF STD DTLS D-26.04 & D-23.01

CIFG = CURB INLET FRAME & GRATE
IB = TYPE A INLET BOX
OWS = OIL WATER SEPARATOR
RE = RIM ELEVATION
SDMH = STORM DRAIN MANHOLE
TD = TRENCH DRAIN

STORM DRAIN PIPING

PIPE DESIGNATION	NOMINAL Ø	LENGTH (LF)	FROM	I.E. (FT)	TO	IE
P1	24" CPP	20'	EXIST.	15.41	DAY LITE	14.80
P2	18" CPP	62'	S1	21.75	S2	20.50
P3	18" CPP	20'	S2	20.40	DAY LITE	20.00
P4	6" PVC	28'	TD	25.98	S2	24.68
P5	6" PVC	26'	TD	25.98	S2	24.68

CPP = CORRUGATED POLYETHYLENE PIPE, TYPE S

CITY & BOROUGH OF JUNEAU DOCKS & HARBORS

REVISIONS

REV.	DATE	DESCRIPTION	DWN.	CKD.	APP.

PND ENGINEERS, INC.
9360 Glacier Highway Ste 100
Juneau, Alaska 99801
Phone: 907-586-2093
Fax: 907-586-2099
www.pndengineers.com

DESIGN: CRS CHECKED: CRS
DRAWN: PJD APPROVED: CRS
SCALE: SCALE IN FEET 0 10 20 FT.

STATE OF ALASKA 49TH Charles R. Somerville CE-8845 REGISTERED PROFESSIONAL ENGINEER
DATE: 5/23/2019

DOWNTOWN WATERFRONT IMPROVEMENTS PHASE I
CBJ CONTRACT NO. DH19-014

SHEET TITLE: **STORM DRAIN PLAN**

PND PROJECT NO.: 182045 C.A.N. NO.: AECC250

C1.07

SEWER SERVICE LAYOUT POINTS

POINT	NORTHING	EASTING	I.E. (FT)	DESCRIPTION
S1	2361664.17	2544207.06	–	SEWER SERVICE SLAB PENETRATION, CONNECT TO S3
S2	2361677.02	2544227.54	–	SEWER SERVICE SLAB PENETRATION, CONNECT TO S3
S3	2361664.11	2544221.23	21.44	SEWER SERVICE SLAB PENETRATION w/ HDPE TEE DROP OUT
S4	2361669.25	2544229.42	21.34	ELBOW
S5	2361659.58	2544321.04	–	CENTER UTILITY ACCESS MANHOLE TYPE I w/ SOLID LID
S6	2361633.47	2544405.70	19.13	CENTER E-ONE SEWER LIFT STATION; GRAVITY SEWER I.E. IN
S7	2361663.16	2544409.42	19.56	2" HDPE ELBOW
S8	2361665.90	2544413.12	M.E.	FIELD LOCATE & CTE 6"ø DIP SEWER SERVICE IAW CBJ STD DTL 216
S9	2361660.78	2544213.87	–	FLOOR DRAIN, SEE DTL
S10	2361669.30	2544227.44	–	FLOOR DRAIN, SEE DTL

SEWER SERVICE LAYOUT POINTS (CON'T.)

POINT	NORTHING	EASTING	I.E. (FT)	DESCRIPTION
S11	2361664.16	2544209.40	–	3"x3" TEE
S12	2361664.14	2544214.28	–	3"x2" TEE
S13	2361670.44	2544224.33	–	3"x2" TEE
S14	2361674.69	2544226.40	–	3"x3" TEE

WATER SYSTEM LAYOUT POINTS

POINT	NORTHING	EASTING	I.E. (FT)	DESCRIPTION
W1	2361672.67	2544213.50	21.44	WATER SERVICE SLAB PENETRATION
W2	2361664.51	2544293.56	20.71	ELBOW
W3	2361674.68	2544309.79	20.54	CENTER UTILITY ACCESS MANHOLE TYPE I w/ SOLID LID
W4	2361648.05	2544392.35	19.15	ELBOW
W5	2361663.09	2544416.16	M.E.	FIELD LOCATE & CTE 6"ø DIP WATER SERVICE w/ SERIES 3800 RESTRAINED JOINT MEGA-COUPLING
W6	2361643.26	2544428.00	–	CENTER FIRE HYDRANT – IAW CBJ STD DTL 403

NOTE:
1. PIPE SWAY STRUTS FOR WATER AND SEWER PIPES NOT SHOWN FOR CLARITY. SEE SHT C1.12 FOR PIPE SWAY STRUT DETAILS.

NOTES:
1. MAINTAIN 5 FEET MIN. BURY ON WATER LINE.
2. MAINTAIN 10 FEET LATERAL SEPARATION DISTANCE BETWEEN WATER & SEWER LINES.
3. MAINTAIN 18 INCH VERTICAL SEPARATION DISTANCE BETWEEN WATER, SEWER SERVICE AND STORM WATER LINES.
4. NOT ALL FITTINGS & APPURTENANCES ARE SHOWN; CONTRACTOR SHALL USE INDUSTRY STANDARD PRACTICES TO ACHIEVE CONNECTIONS NOT DETAILED IN ACCORDANCE WITH THE SPECIFICATIONS CONSISTENT WITH APPLICABLE LOCAL, STATE & FEDERAL REGULATIONS PER ENGINEER DIRECTION (INCIDENTAL).
5. 1 ¼"ø AND 2"ø WASTEWATER PIPE SHALL BE HYDROSTATIC PRESSURE TESTED TO FORCE MAIN REQUIREMENTS, SEE SPECIFICATIONS)
6. SUPPORT ALL BELOW DECK PIPING WITH HANGERS AND BRACES PER DETAILS.
7. ADJUSTMENTS TO FINAL LOCATIONS PER ENGINEER APPROVAL TO FIT FIELD CONDITIONS ENCOUNTERED.
8. WHERE WATER & SEWER LINES ARE PARALLEL, ADJUST WATERLINE INVERT ELEVATION TO MATCH SEWER.

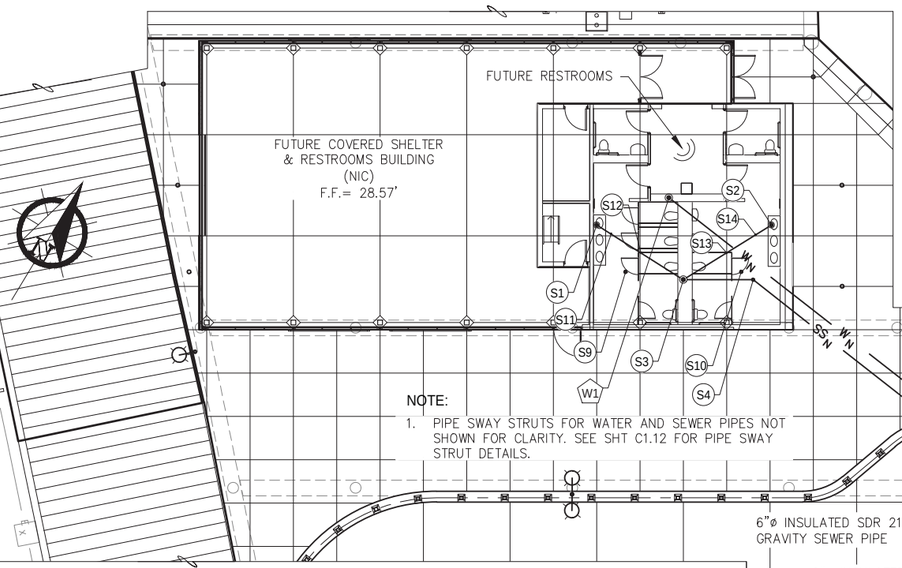

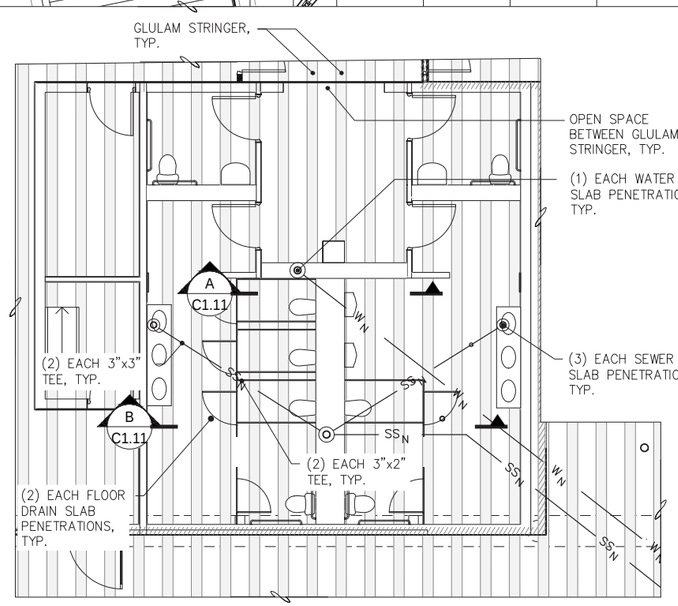

A FUTURE RESTROOM FLOOR PLAN SLAB PENETRATIONS

SCALE IN FEET
0 5 10 FT.

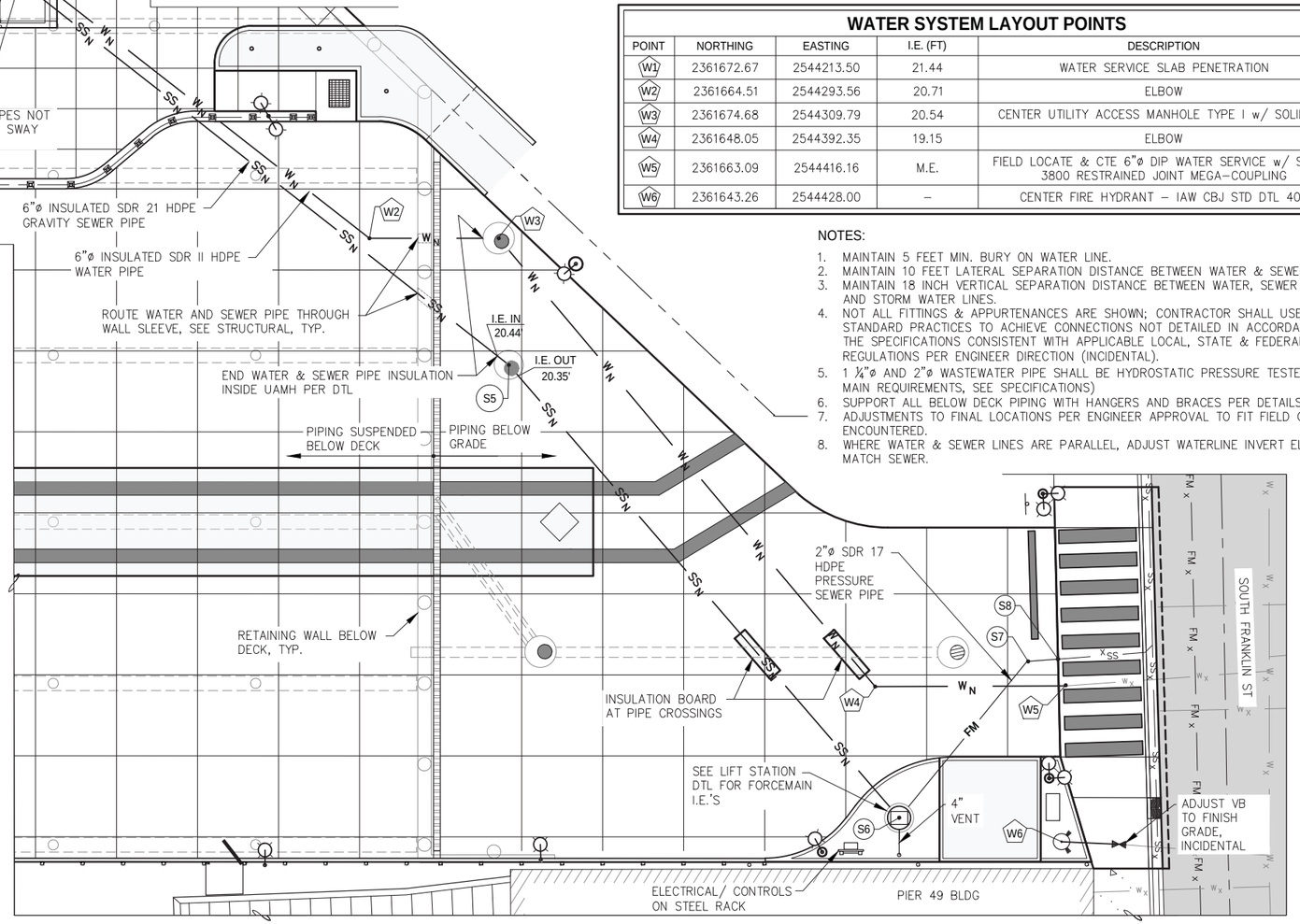

REVISIONS

REV.	DATE	DESCRIPTION	DWN.	CKD.	APP.

P N D ENGINEERS, INC.
9360 Glacier Highway Ste 100
Juneau, Alaska 99801
Phone: 907-586-2093
Fax: 907-586-2099
www.pndengineers.com

DESIGN: BCL CHECKED: CRS
DRAWN: PJD APPROVED: CRS
SCALE: SCALE IN FEET 0 10 20 FT.
DATE: 5/23/2019

Charles R. Somerville CE-8845 REGISTERED PROFESSIONAL ENGINEER

DOWNTOWN WATERFRONT IMPROVEMENTS PHASE I
CBJ CONTRACT NO. DH19-014

SHEET TITLE: **WATER & SEWER UTILITY PLAN**

PND PROJECT NO.: 182045 C.A.N. NO.: AECC250

C1.08

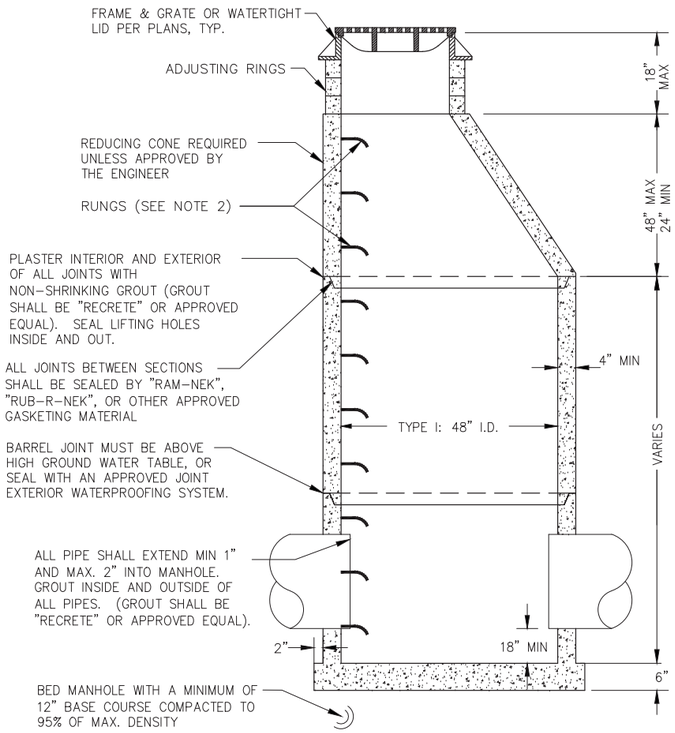

1 TYPE I STORM DRAIN MANHOLE

NOTES:
1. RUNGS PLACED 12" O.C. ON UNOBSTRUCTED SIDE OF MANHOLE. LAST RUNG 18" MAX FROM BOTTOM OF MANHOLE, AND TOP RUNG 6" MAX FROM TOP OF CONE. IF UNOBSTRUCTED SIDE NOT AVAILABLE, LAST RUNG PLACED 6" OVER SMALLEST PIPE.
2. REFER TO A.S.T.M. C-478 FOR DESIGN REQUIREMENTS AND C-478-69 FOR MINIMUM STEEL FOR BARREL. BARREL SHALL BE IMBEDDED IN BASE SO THAT FIRST BARREL SECTION IS CONNECTED WITH BASE.
3. BLOCKOUTS MUST BE FORMED.
4. CONFORM ALL OTHER ASPECTS TO CBJ STD DTL 303.

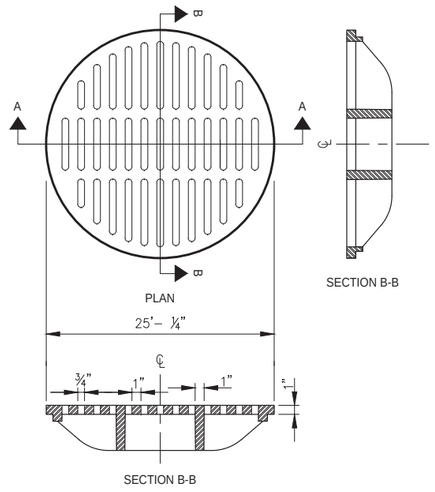

2 TOP INTAKE GRATE

SLOTTED COVER IFCO 705-G, OR EQUAL

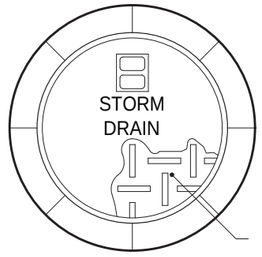

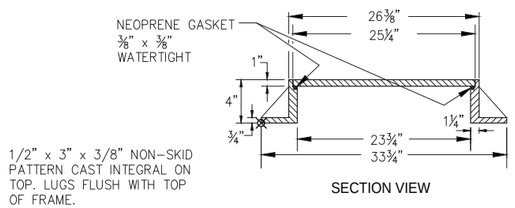

1/2" x 3" x 3/8" NON-SKID PATTERN CAST INTEGRAL ON TOP. LUGS FLUSH WITH TOP OF FRAME.

3 STORM DRAIN MANHOLE
WATERTIGHT SOLID LID AND FRAME

NOTES:
1. FRAME MUST BE MACHINED TO FIT WATERTIGHT NEOPRENE GASKET.
2. COVER SHALL BE WATER TIGHT WITH NO HOLES, SHALL HAVE THE WORD "STORM" CAST IN AND SHALL BE PROVIDED WITH AN INTEGRAL POCKET LIFT HANDLE.
3. FRAME AND COVER SHALL BE DUCTILE IRON AND SHALL CONFORM TO AASHTO M-306.
4. CONFORM ALL OTHER ASPECTS TO CBJ STD DTL 206A.

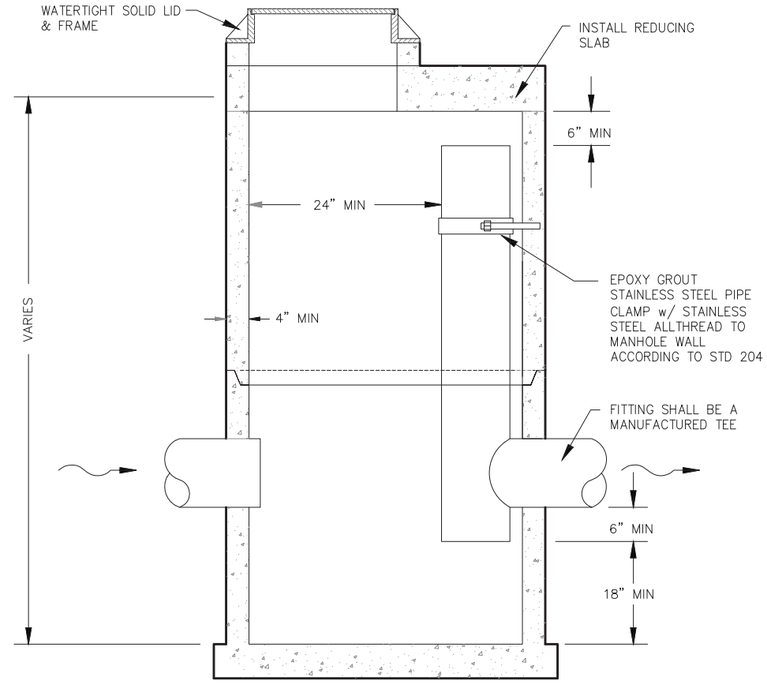

4 OIL-WATER SEPARATOR STORM DRAIN MANHOLE

NOTES:
1. ACCESS TO THE MANHOLE SHALL BE CONSTRUCTED TO ALLOW FOR MAINTENANCE AND PUMPING.
2. MANHOLE SHALL CONFORM IN ALL OTHER ASPECTS TO A TYPE I STORM DRAIN MANHOLE AS SHOWN IN CBJ STD DTL 303.
3. INLET, OUTLET, AND RISER PIPE SHALL BE THE SAME DIMENSION.

REVISIONS

REV.	DATE	DESCRIPTION	DWN.	CKD.	APP.

PND ENGINEERS, INC.
9360 Glacier Highway Ste 100
Juneau, Alaska 99801
Phone: 907-586-2093
Fax: 907-586-2099
www.pndengineers.com

DESIGN: BCL CHECKED: CRS
DRAWN: PJD APPROVED: CRS
SCALE: SCALE IN FEET 0 10 20 FT.

STATE OF ALASKA 49TH Charles R. Somerville CE-8845 REGISTERED PROFESSIONAL ENGINEER
DATE: 5/23/2019

DOWNTOWN WATERFRONT IMPROVEMENTS PHASE I
CBJ CONTRACT NO. DH19-014

SHEET TITLE: **STORM DRAIN DETAILS**

PND PROJECT NO.: 182045 C.A.N. NO.: AECC250

C1.09

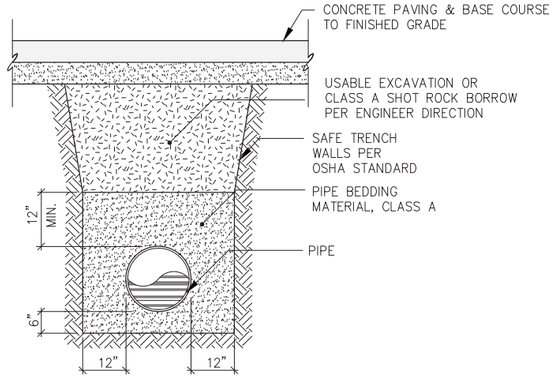

TYPICAL PIPE BEDDING SECTION

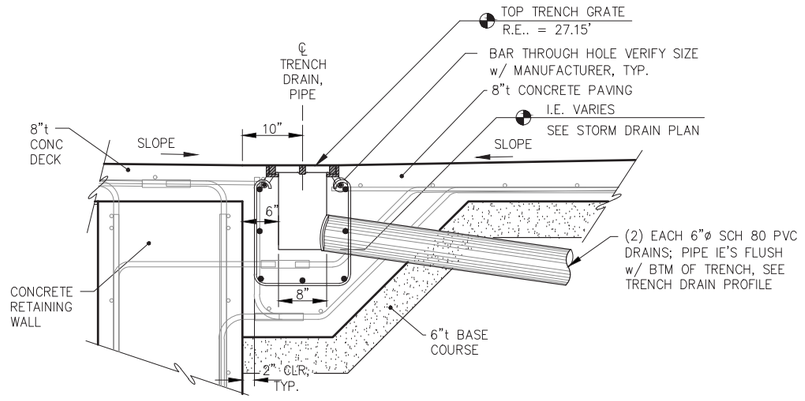

TRENCH DRAIN DETAIL

NOTES:

1. TRENCH GRATE SHALL BE EJIW V–7382–20 ADA BOLTED ASSEMBLY, OR APPROVED EQUAL, HOT–DIPPED GALVANIZED.
2. CAST 6" SCH. 80 PVC DRAIN PIPE INTO CONCRETE.

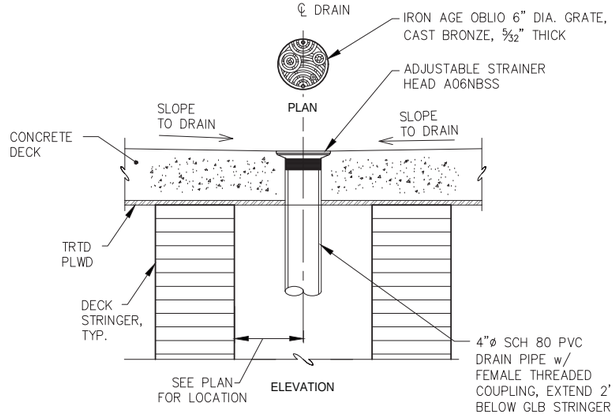

6 INCH DECK DRAIN DETAIL

NOTES:

1. OFFSET & EXTEND PVC DRAIN LINE w/ FABRICATED ELBOWS AS REQUIRED TO AVOID DRAINING ONTO STRUCTURE BELOW.
2. PLANTER DRAINS SIMILAR.

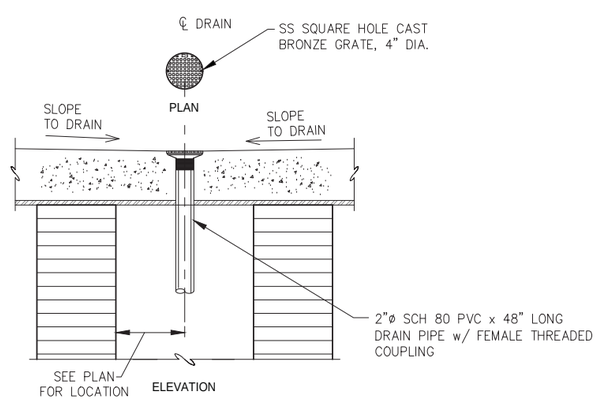

4 INCH FLOOR DRAIN DETAIL

NOTE:

DETAILS NOT SHOWN SIMILAR TO 6" DECK DRAIN.

REVISIONS

REV.	DATE	DESCRIPTION	DWN.	CKD.	APP.

PND ENGINEERS, INC.
9360 Glacier Highway Ste 100
Juneau, Alaska 99801
Phone: 907-586-2093
Fax: 907-586-2099
www.pndengineers.com

DESIGN: CRS CHECKED: CRS
DRAWN: PJD APPROVED: CRS
SCALE: SCALE IN FEET 0 10 20 FT.
DATE: 5/23/2019

STATE OF ALASKA 49TH Charles R. Somerville CE-8845 REGISTERED PROFESSIONAL ENGINEER

DOWNTOWN WATERFRONT IMPROVEMENTS PHASE I
CBJ CONTRACT NO. DH19-014

SHEET TITLE: **STORM DRAIN DETAILS**

PND PROJECT NO.: 182045 C.A.N. NO.: AECC250

C1.10

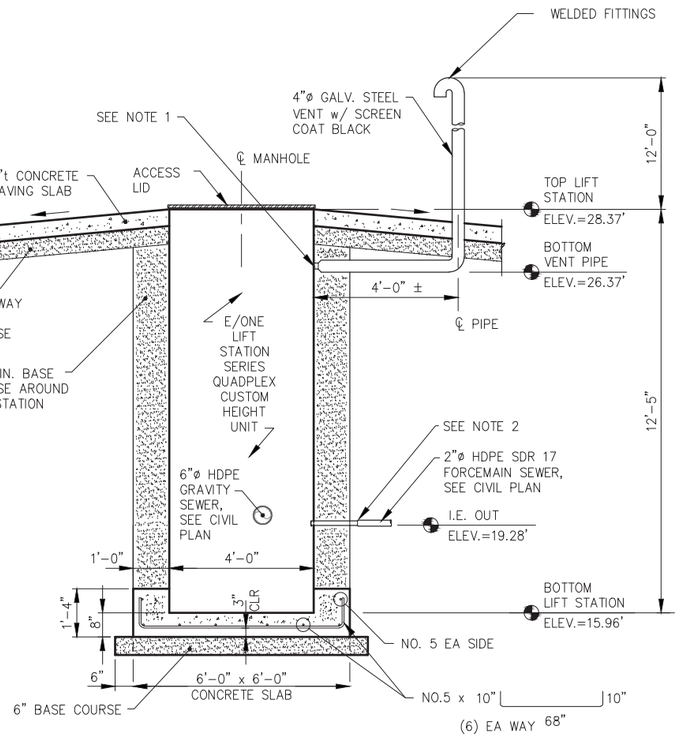

1 SEWER LIFT STATION DETAIL

NOTES:

1. ADAPT 4–INCH VENT PIPE TO 2–INCH GROMET AT WET WELL; SUBMIT CONNECTION DETAIL FOR ENGINEER APPROVAL.
2. ADAPT 1½"ø FEMALE NPT TO 2"ø HDPE PRESSURE DISCHARGE LINE OUTSIDE WET WELL; PROVIDE SUBMITTAL FOR ENGINEER APPROVAL.
3. SEE SPEC SECTION 09900 FOR VENT COATING REQUIREMENTS.

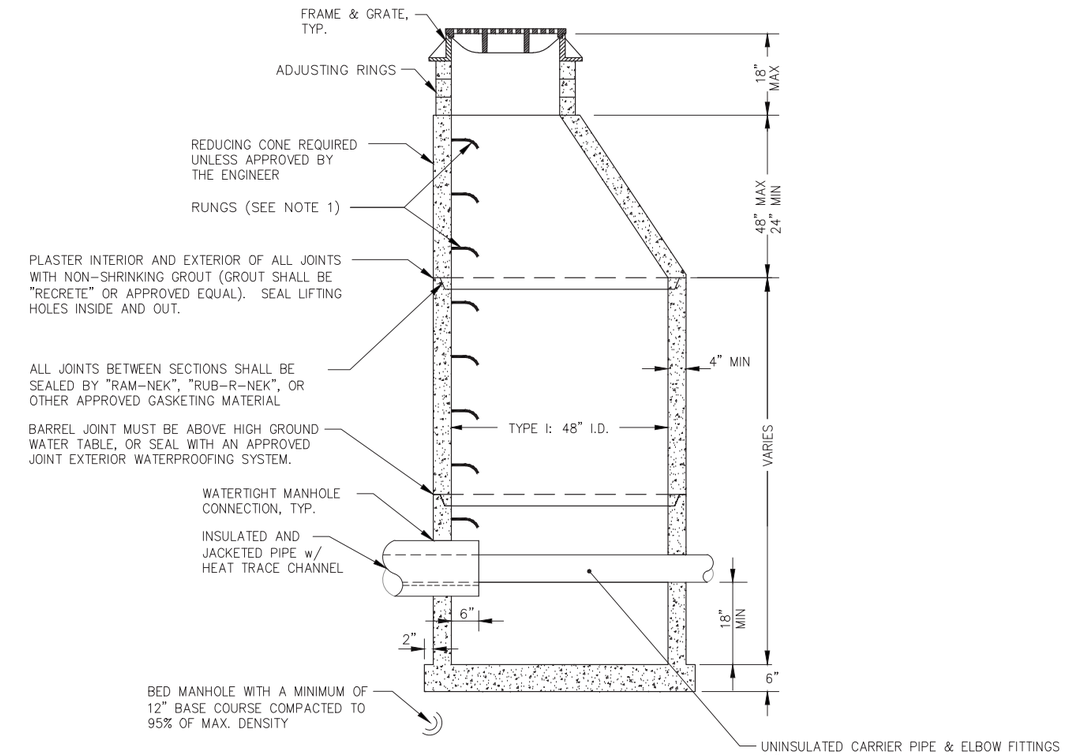

2 UTILITY ACCESS MANHOLE TYPE I

NOTES:

1. RUNGS PLACED 12" O.C. ON UNOBSTRUCTED SIDE OF MANHOLE. LAST RUNG 18" MAX FROM BOTTOM OF MANHOLE, AND TOP RUNG 6" MAX FROM TOP OF CONE. IF UNOBSTRUCTED SIDE NOT AVAILABLE, LAST RUNG PLACED 6" OVER SMALLEST PIPE.
2. REFER TO A.S.T.M. C–478 FOR DESIGN REQUIREMENTS AND C–478–69 FOR MINIMUM STEEL FOR BARREL. BARREL SHALL BE IMBEDDED IN BASE SO THAT FIRST BARREL SECTION IS CONNECTED WITH BASE.
3. BLOCKOUTS MUST BE FORMED.
4. WATERTIGHT CONNECTION DETAIL PER CBJ STD DTL 209.
5. HEAT TRACE INSULATION SHALL BE TERMINATED AND SEALED WATERTIGHT PRIOR TO THE PIPE FITTINGS WITHIN THE MANHOLE; PROVIDE OPEN ACCESS TO HEAT TRACE CHANNEL.

CITY & BOROUGH OF JUNEAU DOCKS & HARBORS

REVISIONS

REV.	DATE	DESCRIPTION	DWN.	CKD.	APP.

PND ENGINEERS, INC.
9360 Glacier Highway Ste 100
Juneau, Alaska 99801
Phone: 907-586-2093
Fax: 907-586-2099
www.pndengineers.com

DESIGN: BCL CHECKED: CRS
DRAWN: PJD APPROVED: CRS
SCALE: SCALE IN FEET 0 10 20 FT.

STATE OF ALASKA 49TH Charles R. Somerville CE-8845 REGISTERED PROFESSIONAL ENGINEER
DATE: 5/23/2019

DOWNTOWN WATERFRONT IMPROVEMENTS PHASE I
CBJ CONTRACT NO. DH19-014

SHEET TITLE: **WATER & SEWER DETAILS**

PND PROJECT NO.: 182045 C.A.N. NO.: AECC250

C1.11

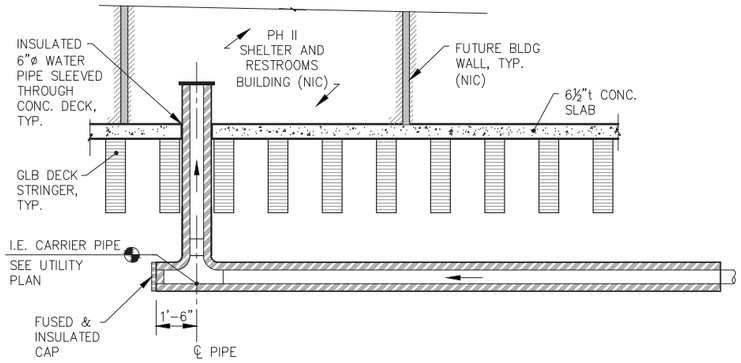

A C1.08 WATER T-CONNECTION DETAIL

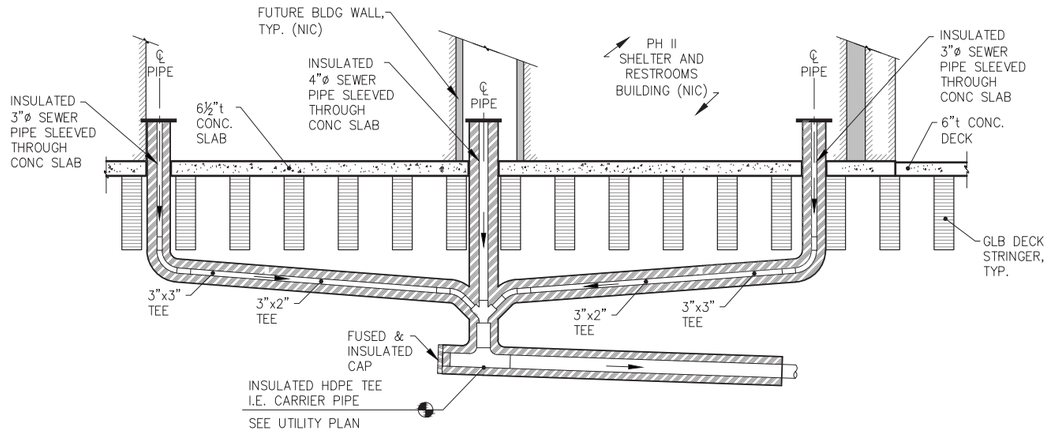

B C1.08 SEWER WYE - CONNECTOR DETAIL

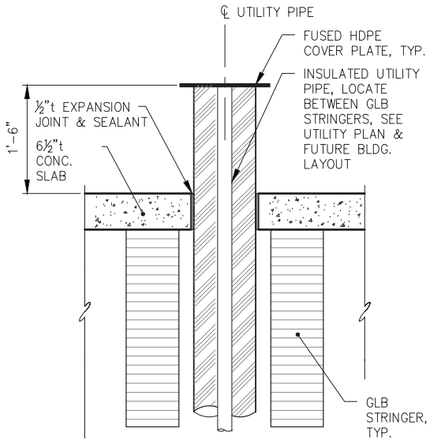

1 TYPICAL UTILITY SERVICE SLAB PENETRATION DETAIL

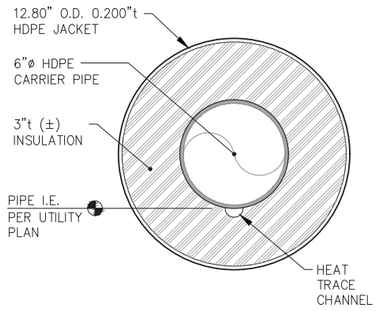

6"Ø INSULATED PIPE DETAIL

NOTE:
2"ø AND 4"ø SEWER PIPES ARE SIMILAR BUT DIFFERENT DIMENSIONS

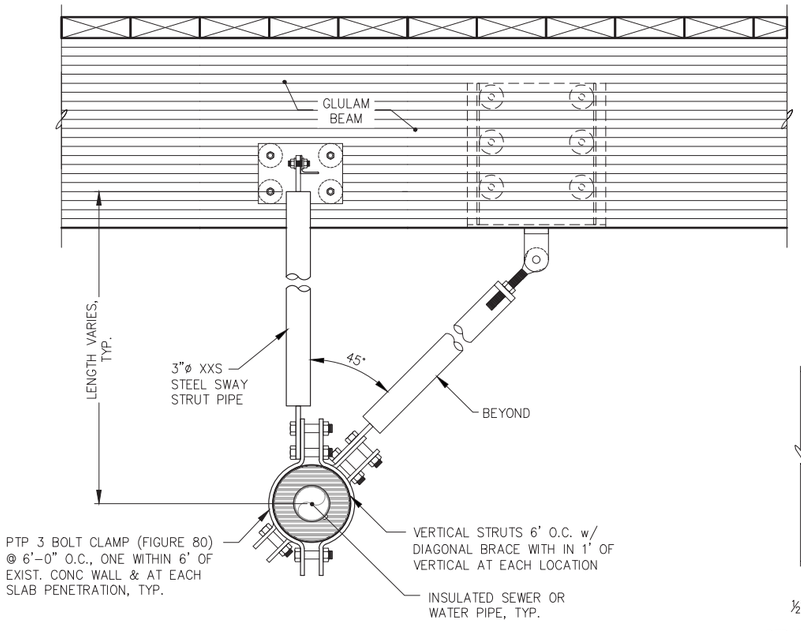

2 PIPE SWAY STRUT DETAIL

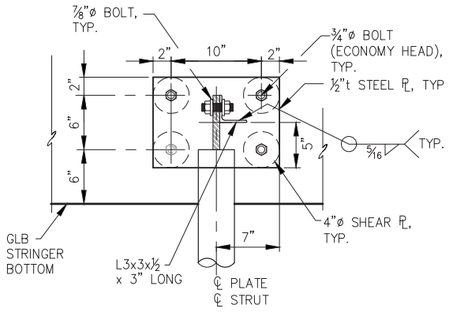

STRUT CONNECTION PLATE DETAIL

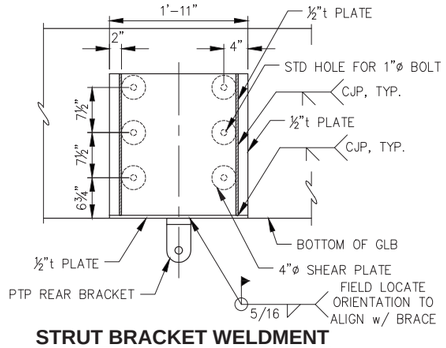

STRUT BRACKET WELDMENT ELEVATION

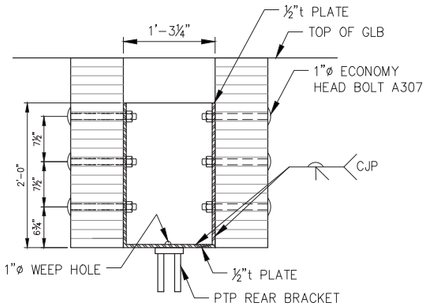

STRUT BRACKET WELDMENT SECTION

REVISIONS

REV.	DATE	DESCRIPTION	DWN.	CKD.	APP.

P N D ENGINEERS, INC.
9360 Glacier Highway Ste 100
Juneau, Alaska 99801
Phone: 907-586-2093
Fax: 907-586-2099
www.pndengineers.com

DESIGN: BCL CHECKED: CRS
DRAWN: PJD APPROVED: CRS
SCALE: AS SHOWN
DATE: 5/23/2019

STATE OF ALASKA 49TH Charles R. Somerville CE-8845 REGISTERED PROFESSIONAL ENGINEER

DOWNTOWN WATERFRONT IMPROVEMENTS PHASE I
CBJ CONTRACT NO. DH19-014

SHEET TITLE: **WATER & SEWER DETAILS**

PND PROJECT NO.: 182045 C.A.N. NO.: AECC250

C1.12

STRIPE POINT LAYOUT

POINT NO.	DESCRIPTION	NORTHING	EASTING
1	STRAIGHT AHEAD ARROW, TIP. SEE DETAILS	2361586.53	2544213.87
2	END 4" WHITE STRIPE	2361602.99	2544236.39
3	END 4" WHITE STRIPE	2361617.68	2544242.85
4	STRAIGHT AHEAD ARROW, TIP. SEE DETAILS	2361636.36	2544253.77
5	BEGIN 4" WHITE STRIPE	2361615.63	2544283.51
6	END 8" WHITE STRIPE	2361669.03	2544290.78
7	END 4" WHITE STRIPE	2361658.45	2544307.83
8	BEGIN 4" WHITE STRIPE	2361646.20	2544332.24
9	STRAIGHT AHEAD ARROW, TIP. SEE DETAILS	2361664.78	2544334.36
10	CORNER 24" WHITE STRIPE	2361656.46	2544348.60

STRIPE POINT LAYOUT (CON'T.)

POINT NO.	DESCRIPTION	NORTHING	EASTING
11	BEGIN 24" WHITE STRIPE	2361668.74	2544354.82
12	BEGIN 24" WHITE STRIPE	2361666.27	2544367.02
13	STRAIGHT AHEAD ARROW, TIP. SEE DETAILS	2361672.60	2544403.50
14	BEGIN 12" WHITE STOP BAR	2361666.60	2544408.65
15	BEGIN 24" WHITE STRIPE	2361680.50	2544404.14
16	BEGIN 24" WHITE STRIPE	2361655.60	2544420.87
17	STRAIGHT AHEAD ARROW, TIP. SEE DETAILS	2361652.87	2544404.24
18	CORNER 24" WHITE STRIPE	2361648.07	2544357.80
19	BEGIN 4" WHITE STRIPE	2361636.34	2544366.04
20	END 4" WHITE STRIPE	2361637.61	2544341.07

STRIPE POINT LAYOUT (CON'T.)

POINT NO.	DESCRIPTION	NORTHING	EASTING
21	BEGIN 4" WHITE STRIPE	2361625.36	2544365.48
22	STRAIGHT AHEAD ARROW, TIP. SEE DETAILS	2361616.90	2544370.79
23	STRAIGHT AHEAD ARROW, TIP. SEE DETAILS	2361566.66	2544290.76
24	BEGIN 4" WHITE STRIPE	2361564.20	2544268.01
25	END 4" WHITE STRIPE	2361576.45	2544243.60
26	END 4" WHITE STRIPE	2361565.47	2544243.04
27	STRAIGHT AHEAD ARROW, TIP. SEE DETAILS	2361561.51	2544236.53
28	END 24" WHITE STRIPE	2361562.06	2544220.71
29	END 24" WHITE STRIPE	2361571.28	2544212.82
30	STOP SIGN, SEE SIGNING SCHEDULE	2361682.94	2544397.05

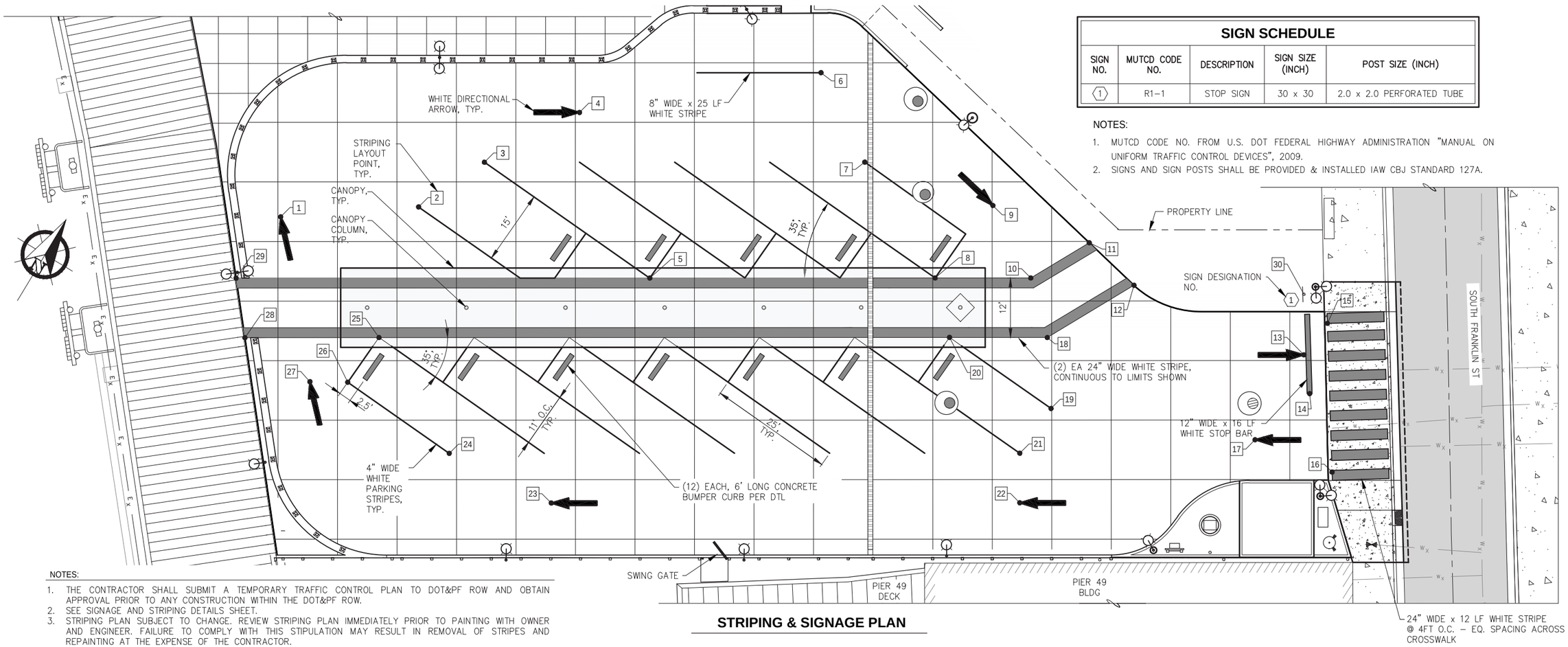

SIGN SCHEDULE

SIGN NO.	MUTCD CODE NO.	DESCRIPTION	SIGN SIZE (INCH)	POST SIZE (INCH)
1	R1-1	STOP SIGN	30 x 30	2.0 x 2.0 PERFORATED TUBE

NOTES:

1. MUTCD CODE NO. FROM U.S. DOT FEDERAL HIGHWAY ADMINISTRATION "MANUAL ON UNIFORM TRAFFIC CONTROL DEVICES", 2009.
2. SIGNS AND SIGN POSTS SHALL BE PROVIDED & INSTALLED IAW CBJ STANDARD 127A.

NOTES:

1. THE CONTRACTOR SHALL SUBMIT A TEMPORARY TRAFFIC CONTROL PLAN TO DOT&PF ROW AND OBTAIN APPROVAL PRIOR TO ANY CONSTRUCTION WITHIN THE DOT&PF ROW.
2. SEE SIGNAGE AND STRIPING DETAILS SHEET.
3. STRIPING PLAN SUBJECT TO CHANGE. REVIEW STRIPING PLAN IMMEDIATELY PRIOR TO PAINTING WITH OWNER AND ENGINEER. FAILURE TO COMPLY WITH THIS STIPULATION MAY RESULT IN REMOVAL OF STRIPES AND REPAINTING AT THE EXPENSE OF THE CONTRACTOR.

STRIPING & SIGNAGE PLAN

REVISIONS

REV.	DATE	DESCRIPTION	DWN.	CKD.	APP.

PND ENGINEERS, INC.
9360 Glacier Highway Ste 100
Juneau, Alaska 99801
Phone: 907-586-2093
Fax: 907-586-2099
www.pndengineers.com

DESIGN: CRS CHECKED: CRS
DRAWN: PJD APPROVED: CRS
SCALE: SCALE IN FEET 0 10 20 FT.
DATE: 5/23/2019

STATE OF ALASKA 49TH — Charles R. Somerville CE-8845 — REGISTERED PROFESSIONAL ENGINEER

DOWNTOWN WATERFRONT IMPROVEMENTS PHASE I
CBJ CONTRACT NO. DH19-014

SHEET TITLE: **STRIPING & SIGNAGE PLAN**

PND PROJECT NO.: 182045 C.A.N. NO.: AECC250

C1.13

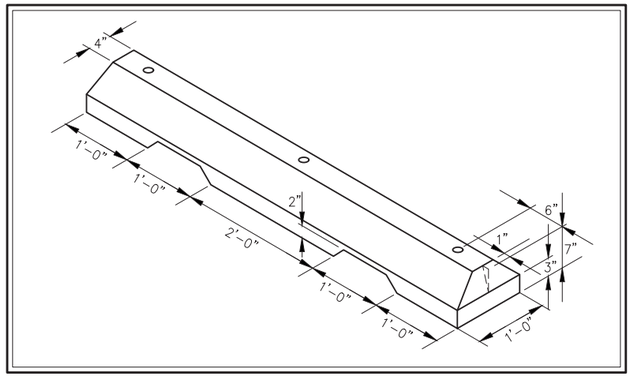

PRECAST CONCRETE BUMPER CURB DETAIL

(QUANTITY: 12 REQ'D.)

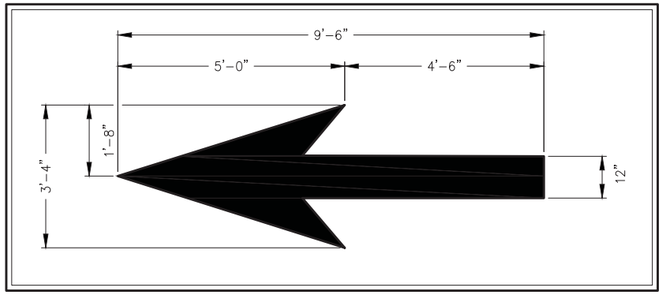

THROUGH LANE-USE ARROW

(QUANTITY: 8 REQ'D.)

NOTE:

ARROWS TO BE LOCATED AT APPROXIMATE LOCATION SHOWN ON SIGNING AND STRIPING PLAN. EXACT LOCATION TO BE DETERMINED IN FIELD AS INSTRUCTED BY ENGINEER.

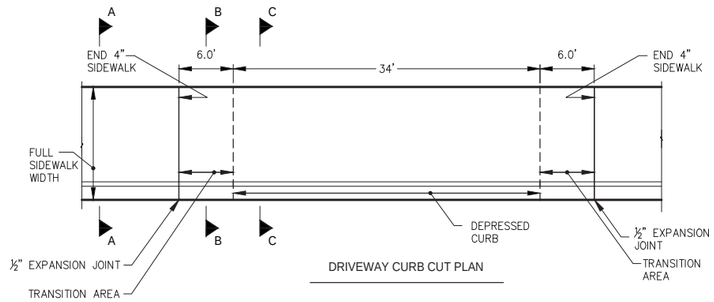

DRIVEWAY CURB CUT PLAN

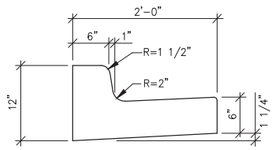

STANDARD CURB & GUTTER

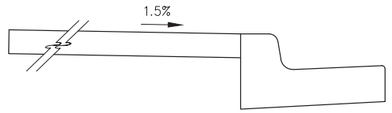

NORMAL SECTION A-A

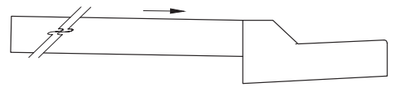

TRANSITION SECTION B-B

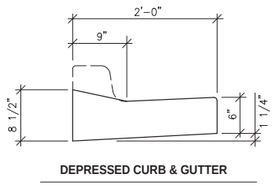

DEPRESSED CURB & GUTTER

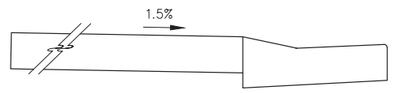

DEPRESSED SECTION C-C

DRIVEWAY CURB CUT, CURB & GUTTER DETAILS

(DOT&PF STD DTL I.20.20)

GENERAL CURB & GUTTER NOTES:

1. THE VERTICAL MATCH POINT FOR ALL CURB AND GUTTER TRANSITIONS SHALL BE THE FLOWLINE.
2. CURB AND GUTTER TRANSITIONS SHALL BE GRADUAL OVER A MIN DISTANCE OF 6 LF PER ENGINEER DIRECTION.
3. ALL STEEL MUST HAVE A MINIMUM OF 2" OF CONCRETE COVER.
4. ALL JOINTS AND SEAMS SHALL BE TOOLED AND EDGED, SEE SERIES 6 FOR CONTROL JOINT DTL.
5. STEEL TROWELING FINISH REQUIRED PRIOR TO BROOM FINISHING OF ALL SURFACES.
6. CONCRETE INTERNATIONAL CORPORATION ASHFORD FORMULA OR APPROVED EQUAL SHALL BE APPLIED AS A CURING COMPOUND. APPLICATION SHALL EXPLICITLY CONFORM TO THE MANUFACTURER'S RECOMMENDATIONS.
7. BED ALL TYPES OF CURB AND GUTTER W/ 6"t. MIN LAYER OF BASE COURSE GRADING D-1, ALL AROUND.
8. SUBBASE MATERIALS SHALL BE PER APPLICABLE FILL SECTION, EXCEPT AS NOTED.
9. CURBS SHALL HAVE POLY-FIBER REINFORCEMENT UNO, SEE SPECIFICATIONS.
10. PROVIDE A COARSE BROOMED FINISH ON RAMP RUNS PERPENDICULAR TO THE RAMP SLOPE.

CITY & BOROUGH OF JUNEAU DOCKS & HARBORS

REVISIONS

REV.	DATE	DESCRIPTION	DWN.	CKD.	APP.

PND ENGINEERS, INC.
9360 Glacier Highway Ste 100
Juneau, Alaska 99801
Phone: 907-586-2093
Fax: 907-586-2099
www.pndengineers.com

DESIGN: CRS CHECKED: CRS
DRAWN: PJD APPROVED: CRS
SCALE: SCALE IN FEET 0 10 20 FT.

STATE OF ALASKA 49TH Charles R. Somerville CE-8845 REGISTERED PROFESSIONAL ENGINEER
DATE: 5/23/2019

DOWNTOWN WATERFRONT IMPROVEMENTS PHASE I
CBJ CONTRACT NO. DH19-014

SHEET TITLE: **STRIPING, BUMPER CURB & DRIVEWAY CURB CUT**

PND PROJECT NO.: 182045 C.A.N. NO.: AECC250

C1.14

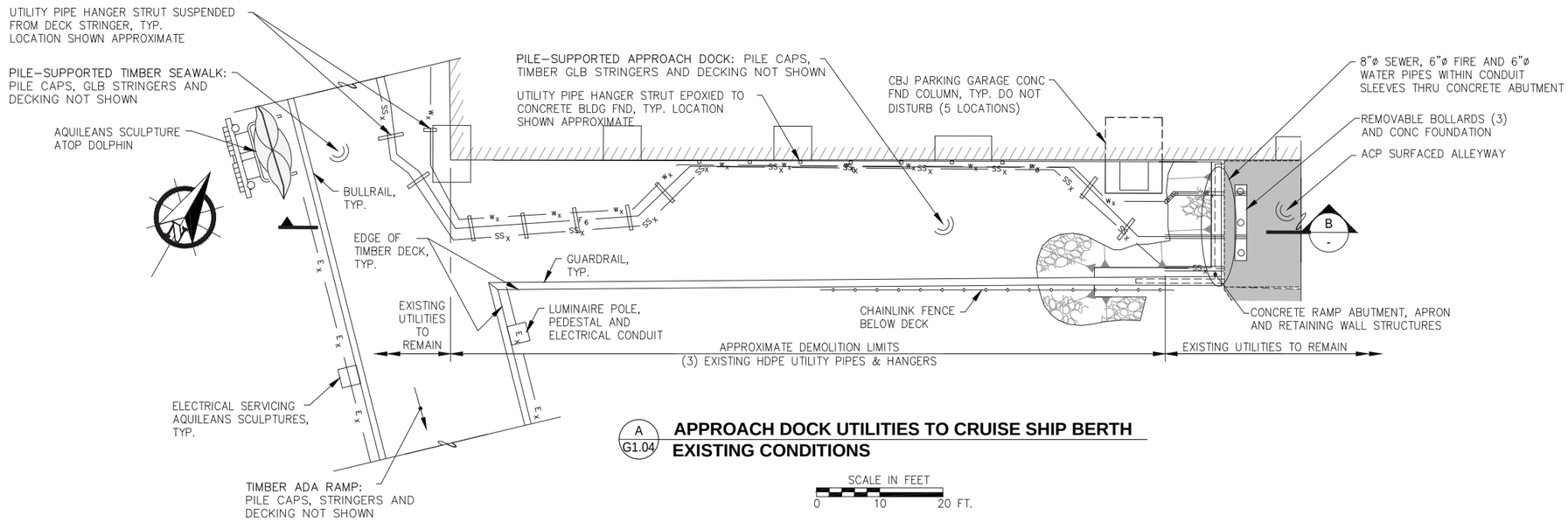

A G1.04 **APPROACH DOCK UTILITIES TO CRUISE SHIP BERTH EXISTING CONDITIONS**

SCALE IN FEET
0 10 20 FT.

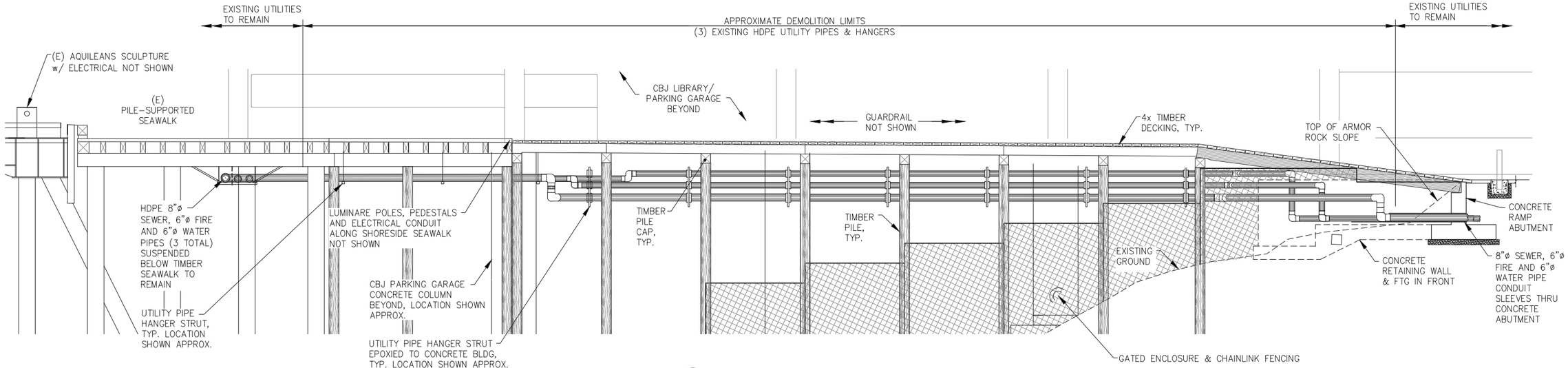

B **APPROACH DOCK EXISTING UTILITIES PROFILE**

SCALE IN FEET
0 5 10 FT.

NOTE:
SEE ALSO DEMOLITION PLANS

REVISIONS

REV.	DATE	DESCRIPTION	DWN.	CKD.	APP.

PND ENGINEERS, INC.
9360 Glacier Highway Ste 100
Juneau, Alaska 99801
Phone: 907-586-2093
Fax: 907-586-2099
www.pndengineers.com

DESIGN: CRS CHECKED: CRS
DRAWN: PJD APPROVED: CRS
SCALE: AS SHOWN
DATE: 5/23/2019

STATE OF ALASKA 49TH — Charles R. Somerville CE-8845 — REGISTERED PROFESSIONAL ENGINEER

DOWNTOWN WATERFRONT IMPROVEMENTS PHASE I
CBJ CONTRACT NO. DH19-014

SHEET TITLE: **APPROACH DOCK UTILITIES EXISTING CONDITIONS**

PND PROJECT NO.: 182045 C.A.N. NO.: AECC250

C1.15

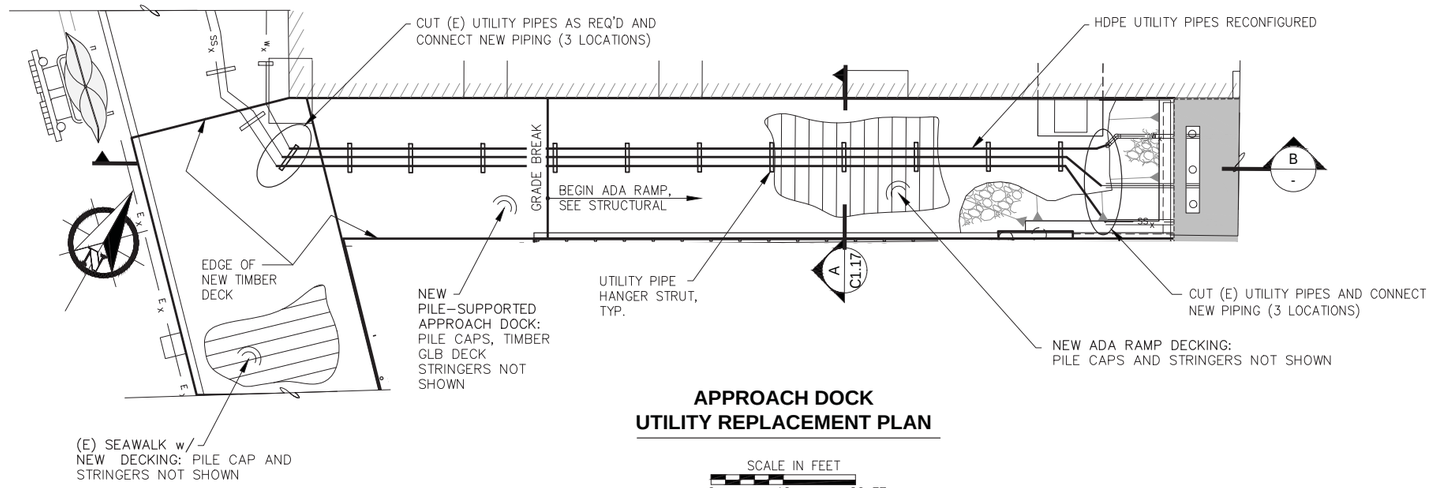

APPROACH DOCK UTILITY REPLACEMENT PLAN

SCALE IN FEET
0 10 20 FT.

UTILITY RELOCATION NOTES:

1. UTILITIES SHOWN APPROXIMATE, FIELD LOCATE AND ADJUST PER ENGINEER APPROVAL.
2. FABRICATE ALL BENDS IN UTILITY PIPES AS REQ'D.
3. EXISTING PIPING AND HANGER EQUIPMENT IN GOOD CONDITION MAY BE SALVAGED AND INCORPORATED INTO THE UTILITY RECONFIGURATION WORK TO THE EXTENT PRACTICABLE.

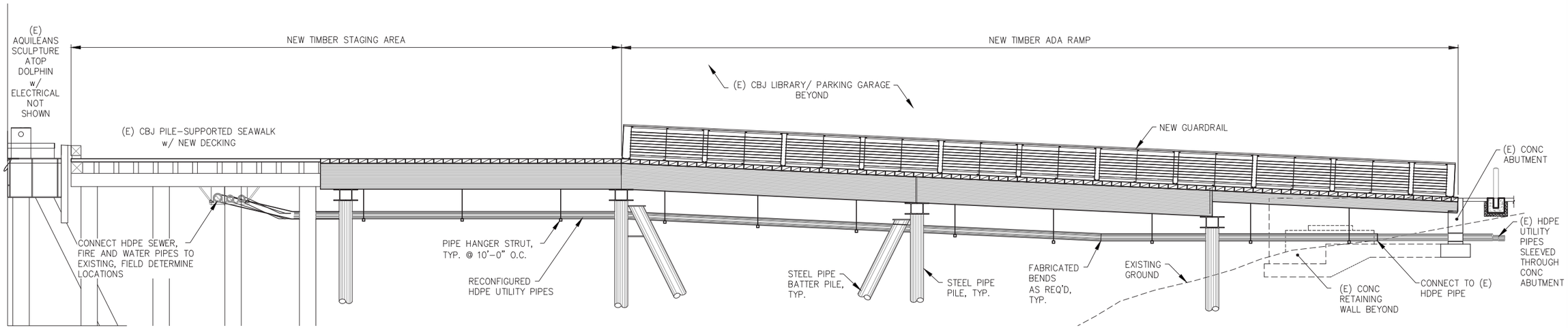

APPROACH DOCK PROFILE w/ REPLACEMENT UTILITY PIPES

B
-

SCALE IN FEET
0 5 10 FT.

REVISIONS

REV.	DATE	DESCRIPTION	DWN.	CKD.	APP.

PND ENGINEERS, INC.
9360 Glacier Highway Ste 100
Juneau, Alaska 99801
Phone: 907-586-2093
Fax: 907-586-2099
www.pndengineers.com

DESIGN: CRS CHECKED: CRS
DRAWN: PJD APPROVED: CRS
SCALE: AS SHOWN
DATE: 5/23/2019

STATE OF ALASKA 49TH Charles R. Somerville CE-8845 REGISTERED PROFESSIONAL ENGINEER

DOWNTOWN WATERFRONT IMPROVEMENTS PHASE I
CBJ CONTRACT NO. DH19-014

SHEET TITLE: **APPROACH DOCK UTILITIES REPLACEMENT PLAN**

C1.16

PND PROJECT NO.: 182045 C.A.N. NO.: AECC250

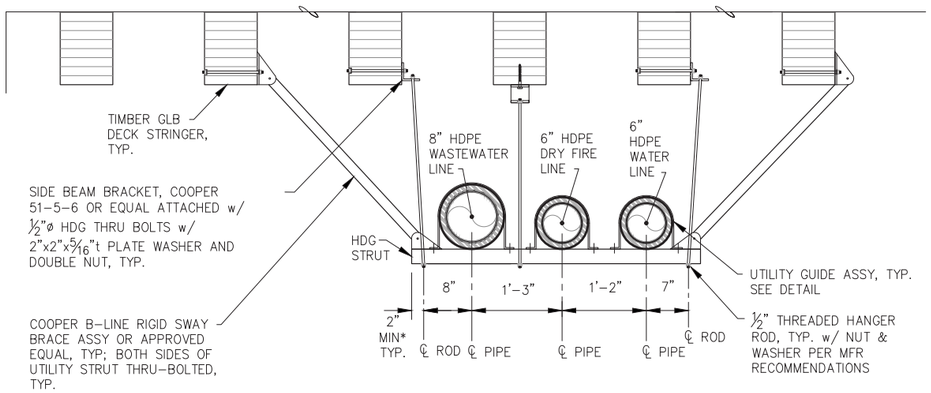

THREE-PIPE HANGER STRUT DETAIL

A / C1.16

HANGER STRUT NOTES:

1. HANGERS SHALL BE INSTALLED ON UTILITY LINE PATH @ 10'–0" OC MAX.
2. HANGERS SHALL BE INSTALLED ADJACENT TO EACH SIDE OF ALL FITTINGS, UNO. MAINTAIN 6" CLR TO FUSED JOINTS.
3. FIELD DRILL HANGER AND SWAY BRACE ATTACHMENT HOLES THROUGH TIMBER STRINGERS.
4. TREAT ALL HOLES AND CUTS IN TIMBER PER AWPA M–4
5. STRUT, ROD & SWAY BRACE LENGTHS SHALL VARY w/ PIPE ROUTE AND LOCATION.
6. ALL HANGER AND SWAY BRACE COMPONENTS SHALL BE HOT DIP GALVANIZED OR 316 SS.
7. ALL HANGERS AND SWAY BRACE COMPONENTS SHALL BE COORDINATED w/ MFR TO ENSURE SEISMIC LOAD CAPABILITY IS MET TO THE LOADS PROVIDED ON S1.01 TO 2013 NFPA STANDARDS. MAX ROD LENGTH SHALL BE 3'–0", UNO.

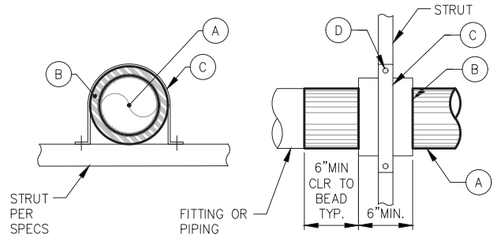

UTILITY GUIDE SUPPORT

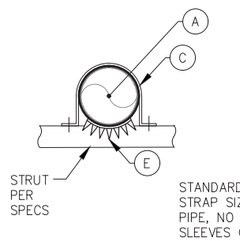

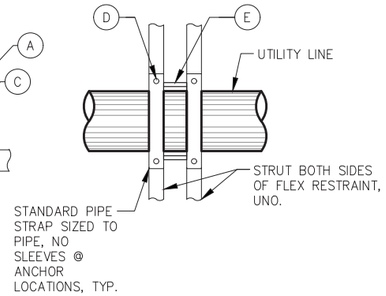

UTILITY ANCHOR SUPPORT

UTILITY SUPPORT DETAILS

NOTES:

1. SLEEVES SHALL BE SLID OVER PIPE PRIOR TO BUTT WELD AS REQUIRED.
2. PIPE STRAPS SHALL BE SIZED FOR PIPE SLEEVES WHERE SLEEVES ARE REQ'D.
3. UTILITY GUIDE SUPPORTS SHALL HAVE 6" MIN CLEARANCE FROM BUTT–WELDED JOINTS.
4. STRUTS SUPPORTING (2) OR MORE PIPES SHALL BE SECURED w/ MIN (3) ½" BOLTS OR EPOXY ANCHORS, UNO.
5. STRUTS SUPPORTING (1) PIPE SHALL BE SECURED w/ MIN (2) ½" BOLTS OR EPOXY ANCHORS, UNO.

SUPPORT COMPONENT TABLE

UTILITY	(A)	(B)	(C)	(D)	(E)
6" WATER OR FIRE	6" HDPE UTILITY LINE	8" SDR 11 HDPE SLEEVE	STANDARD PIPE STRAP	½" 316 SS BOLT & CHANNEL NUT	ELECTROFUSION FLEX RESTRAINT
8" WASTEWATER	8" HDPE UTILITY LINE	10" SDR 13.5 HDPE SLEEVE	STANDARD PIPE STRAP	½" 316 SS BOLT & CHANNEL NUT	ELECTROFUSION FLEX RESTRAINT

CITY & BOROUGH OF JUNEAU — DOCKS & HARBORS

REVISIONS

REV.	DATE	DESCRIPTION	DWN.	CKD.	APP.

PND ENGINEERS, INC.
9360 Glacier Highway Ste 100
Juneau, Alaska 99801
Phone: 907-586-2093
Fax: 907-586-2099
www.pndengineers.com

DESIGN: CRS CHECKED: CRS
DRAWN: PJD APPROVED: CRS
SCALE: AS SHOWN
DATE: 5/23/2019

STATE OF ALASKA — 49TH — Charles R. Somerville — CE-8945 — REGISTERED PROFESSIONAL ENGINEER

DOWNTOWN WATERFRONT IMPROVEMENTS PHASE I
CBJ CONTRACT NO. DH19-014

SHEET TITLE: **APPROACH DOCK UTILITIES SUPPORT DETAILS**

PND PROJECT NO.: 182045 C.A.N. NO.: AECC250

C1.17

STRUCTURAL GENERAL NOTES

APPLICABLE CODES AND STANDARDS

1. INTERNATIONAL CODE COUNCIL (ICC), "INTERNATIONAL BUILDING CODE (IBC) 2012".
2. AMERICAN ASSOCIATION OF STATE HIGHWAY BRIDGES (AASHTO), "STANDARD SPECIFICATIONS FOR HIGHWAY BRIDGES, SEVENTEENTH EDITION, 2002".
3. AMERICAN SOCIETY FOR TESTING AND MATERIALS (ASTM) STANDARDS, CURRENT EDITION.
4. AMERICAN INSTITUTE OF STEEL CONSTRUCTION (AISC), "MANUAL OF STEEL CONSTRUCTION, FIFTEENTH EDITION".
5. AMERICAN WELDING SOCIETY (AWS), "D1.1 STRUCTURAL WELDING CODE – STEEL, CURRENT EDITION".
6. AMERICAN CONCRETE INSTITUTE (ACI), "ACI MANUAL OF CONCRETE PRACTICE, CURRENT EDITION".
7. AMERICAN CONCRETE INSTITUTE (ACI), "318–14 BUILDING CODE REQUIREMENTS FOR STRUCTURAL CONCRETE AND COMMENTARY".
8. NATIONAL DESIGN SPECIFICATIONS FOR WOOD CONSTRUCTION (NDS), 2012 EDITION.
9. AMERICAN BUREAU OF SHIPPING (ABS), RULES FOR BUILDING AND CLASSING OFFSHORE INSTALLATIONS, 1997.
10. AMERICAN SOCIETY OF CIVIL ENGINEERS (ASCE), MINIMUM DESIGN LOADS AND ASSOCIATED CRITERIA FOR BUILDING AND OTHER STRUCTURES, ASCE 7–16

DESIGN CRITERIA

THE FOLLOWING LOADS ARE PRESCRIBED BY THE INTERNATIONAL BUILDING CODE, 2012. LOADS ARE ALSO GENERATED FROM THE AASHTO STANDARD SPECIFICATIONS FOR HIGHWAY BRIDGES 17TH EDITION – 2002 WHERE NOTED.

DESIGN PARAMETERS

DOCK LIVE LOAD:
AASHTO H20 TRUCK (2 MONTH DURATION, Cd= 1.15)
400 PSF UNIFORM LOAD
50,000 lb. FORK LIFT AXLE LOAD (2 MONTH DURATION, Cd= 1.15)
200,000 lb. TRUCK CRANE (7 DAY DURATION, Cd= 1.25), OUT RIGGER LOAD (1–DAY DURATION, Cd=1.33) WHILE IN OPERATION OUTRIGGER MUST BE SPREAD OVER A MIN OF 5 STRINGERS AND THE LIFTING PLAN SHALL BE APPROVED BY A REGISTERED PROFESSIONAL ENGINEER IN THE STATE OF ALASKA AND SUBMITTED TO THE ENGINEER FOR APPROVAL.

VEHICLE GUARDRAILS:
6,000# POINT LOAD ANYWHERE ON RAIL OR POST
50 PLF @ HORIZONTAL PEDESTRIAN RAILS.

ADA APPROACH RAMP:
AASHTO H15 TRUCK (7 DAY DURATION, CD=1.25)
200PSF UNIFORM LOAD

OVER FRAMING:
100 PSF UNIFORM AREA LOAD
AASHTO H10 TRUCK (7 DAY DURATION (1)=1.25)

SNOW LOAD

GROUND SNOW LOAD = 70 PSF UNIFORM

SEISMIC LOAD

SITE CLASS =C, SOFT ROCK
SEISMIC DESIGN CATEGORY = D SIESMIC IMPORTANCE FACTOR = Ie=1.0
SS= 0.528g SDS=0.418g SIESMIC RESPONSE MODIFICATION FACTOR = R=1.0
SS= 0.356g SDS=0.343g SIESMIC RESPONSE COEFFICIENT FACTOR = CS=0.418

WIND LOAD

IBC 140 MPH 3–SECOND GUST, EXPOSURE D UNLESS OTHERWISE NOTED.
WIND OCCUPANCY IMPORTANCE = II

FLOOD LOAD

CODE: ASCE 7–16
BASE FLOOD ELEVATION (BFE) = +25' MLLW
BREAKING WAVE HEIGHT (Hb) = 3'
STILL WATER DEPTH (ds) = 50'

ABBREVIATIONS

ø	DIAMETER
@	AT
ADA	AMERICANS WITH DISABILITIES ACT
APPROX	APPROXIMATELY
ASCE	AMERICAN SOCIETY OF CIVIL ENGINEERS
AASHTO	AMERICAN ASSOCIATION OF STATE HIGHWAY TRANSPORTATION OFFICIALS
ASTM	AMERICAN SOCIETY OF TESTING AND MATERIALS
BTM	BOTTOM
CJ	CONSTRUCTION JOINT
℄	CENTERLINE
CON	CONNECTION
CONC.	CONCRETE
CONT	CONTINUOUS
CP	COMPLETE PENETRATION
CPP	CORRUGATED PLASTIC PIPE
CRNRS	CORNERS
CS	COUNTER SINK
DBL	DOUBLE
E	EXISTING
EA.	EACH
ELEV.	ELEVATION
E.W.	EACH WAY
FLGS	FLANGES
FTG	FOOTING
FND	FOUNDATION
GALV	GALVANIZED
GLB	GLUE–LAMINATED BEAM
GLULAM	GLUE LAMINATED TIMBER
HORZ.	HORIZANTAL
HDPE	HIGH–DENSITY POLYETHYLENE
kip	1000 POUNDS
Lb	POUND
LBS	POUNDS
MI	MALLEABLE IRON
MID	MIDDLE
MIN	MINIMUM
MLLW	MEAN LOW LOW WATER
NIC	NOT IN CONTRACT
NO.	NUMBER
O.C.	ON CENTER
OS.	OWNER SUPPLIED
OPP.	OPPOSITE
OSHA	OCCUPATIONAL SAFETY AND HEALTH ADMINISTRATION
ℙ	PLATE
PSF	POUND PER SQUARE FOOT
PLF	POUND PER LINEAR FOOT
PED	PEDESTRIAN
R	RADIUS
REG.	REGULATION
REQ'D	REQUIRED
SC	SLIP CRITICAL
SIM	SIMILAR
S.S.	STAINLESS STEEL
STA	STATION
STD	STANDARD
TRTD	TREATED
TYP.	TYPICAL
t	THICKNESS
UNO	UNLESS NOTED OTHERWISE
VERT.	VERTICAL
W/	WITH
W/OUT	WITH OUT
WP	WORK POINT

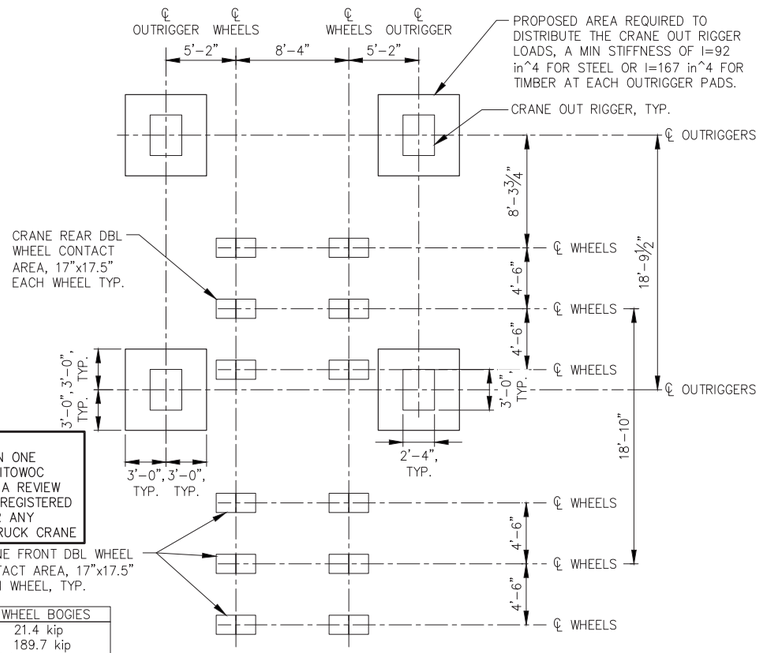

NOTE:
CRANE LOADING IS BASED ON ONE LENGTH OF BOOM ON A MANITOWOC 3900 SERIES TRUCK CRANE. A REVIEW SHALL BE COMPLETED BY A REGISTERED PROFESSIONAL ENGINEER FOR ANY VARIATION OF THE DESIGN TRUCK CRANE

CRANE FRONT AND REAR WHEEL BOGIES		
FRONT	= 70.6 kip	21.4 kip
REAR	= 140.5 kip	189.7 kip
OUTRIGGER	= 230kip OVER (2) OUTRIGGERS	

CRANE LOAD DISTRIBUTION REQUIREMENTS

FORKLIFT AXLE LOADS
FRONT = 44 kip
REAR = 6 kip

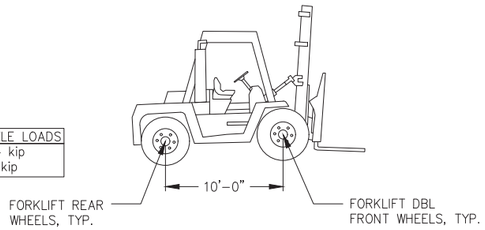

FORKLIFT ELEVATION

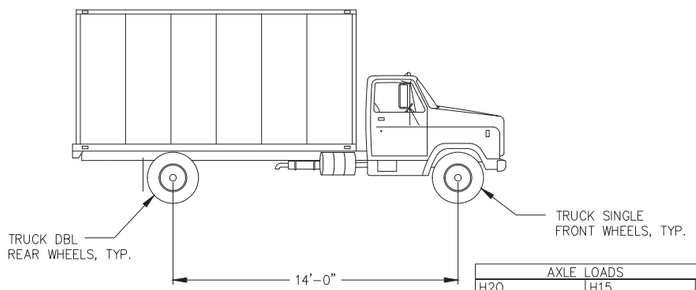

AXLE LOADS		
H20	H15	H10
FRONT = 8 kip	FRONT = 6 kip	FRONT = 4 kip
REAR = 32 kip	REAR = 24 kip	REAR = 16 kip

AASHTO TRUCK ELEVATION

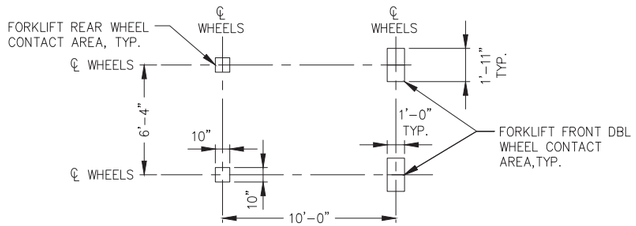

FORKLIFT WHEEL DISTRIBUTION LAYOUT

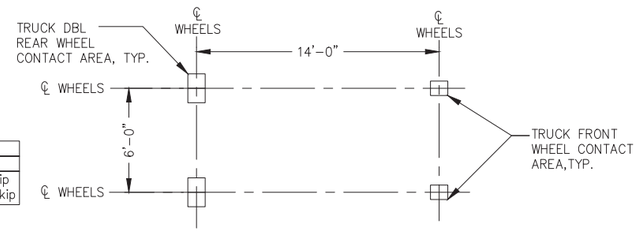

AASHTO TRUCK WHEEL DISTRIBUTION LAYOUT

REVISIONS

REV.	DATE	DESCRIPTION	DWN.	CKD.	APP.

P N D ENGINEERS, INC.
9360 Glacier Highway Ste 100
Juneau, Alaska 99801
Phone: 907-586-2093
Fax: 907-586-2099
www.pndengineers.com

DESIGN: MDS CHECKED: CRS
DRAWN: KLL APPROVED: CRS
SCALE: NTS
DATE: 5/23/2019

STATE OF ALASKA 49 TH Charles R. Somerville CE-8845 REGISTERED PROFESSIONAL ENGINEER

DOWNTOWN WATERFRONT IMPROVEMENTS PHASE I
CBJ CONTRACT NO. DH19-014

SHEET TITLE: **STRUCTURAL GENERAL NOTES**

PND PROJECT NO.: 182045 C.A.N. NO.: AECC250

S1.01

PILE SCHEDULE SUMMARY TABLE

LOCATION		DIA. (INCH)	THICKNESS (INCH)	BATTER	SUPPLY LENGTH (ft)	ULTIMATE LOAD (kips)	
						TENSION	COMPRESSION
CONCRETE DOCK	1B VERT	18"	0.500		90		370
	1C VERT	18"	0.500		90		400
	1C BATTER	18"	0.500	2V:1H	110	70	70
	1D VERT	18"	0.500		100		420
	1G VERT	18"	0.500		100		220
	2B VERT	18"	0.500		80		750
	2C VERT	18"	0.500		90		820
	2C BATTER	18"	0.500	2V:1H	100	70	70
	2D VERT	18"	0.500		90		620
	2D.5 VERT	18"	0.500		90		450
	2G VERT	18"	0.500		100		250
	3B VERT	18"	0.500		80		750
	3C VERT	18"	0.500		90		820
	3C BATTER	18"	0.500	2V:1H	110	70	70
	3D VERT	18"	0.500		90		620
	3D.5 VERT	18"	0.500		90		510
	3G VERT	18"	0.500		100		300
	4B VERT	18"	0.500		80		770
	4C VERT	18"	0.500		90		840
	4C BATTER	18"	0.500	2V:1H	100	70	70
	4D VERT	18"	0.500		90		840
	4E VERT	18"	0.500		90		620
	4G VERT	18"	0.500		90		200
	5B VERT	18"	0.500		90		730
	5C VERT	18"	0.500		90		800
	5C BATTER	18"	0.500	2V:1H	100	70	70
	5D VERT	18"	0.500		90		800
	5E VERT	18"	0.500		90		640
	5G VERT	18"	0.500		90		240
	6B.5 VERT	18"	0.500		90		710
	6C VERT	18"	0.500		90		760
	6D BATTER	18"	0.500	2V:1H	90	70	70
	6D VERT	18"	0.500		90		1020
	6E VERT	18"	0.500		90		880
	6G VERT	18"	0.500		90		370

PILE SCHEDULE SUMMARY TABLE

LOCATION		DIA. (INCH)	THICKNESS (INCH)	BATTER	SUPPLY LENGTH (ft)	ULTIMATE LOAD (kips)	
						TENSION	COMPRESSION
TIMBER DOCK	7C.5 VERT	18"	0.500		80		570
	7D VERT	18"	0.500		80		800
	7D BATTER	18"	0.500	2V:1H	100	70	70
	7E VERT	18"	0.500		80		1060
	7G VERT	18"	0.500		90		530
	8D VERT	16"	0.500		80		650
	8D BATTER	16"	0.500	2V:1H	90	70	70
	8E VERT	16"	0.500		80		850
	8G VERT	16"	0.500		80		540
	9E BATTER NW	16"	0.500	2V:1H	80		450
	9E BATTER SE	16"	0.500	2V:1H	90		450
	9F BATTER NW	16"	0.500	2V:1H	80		450
	9F BATTER SE	16"	0.500	2V:1H	90		450
	9G VERT	16"	0.500		80		170
	10E BATTER NW	16"	0.500	2V:1H	80		450
	10E BATTER SE	16"	0.500	2V:1H	90		450
	10F BATTER NW	16"	0.500	2V:1H	80		450
	10F BATTER SE	16"	0.500	2V:1H	90		450
	10G VERT	16"	0.500		80		280
	11E BATTER NW	16"	0.500	2V:1H	80		450
	11E BATTER SE	16"	0.500	2V:1H	80		450
	11F BATTER NW	16"	0.500	2V:1H	70		450
	11F BATTER SE	16"	0.500	2V:1H	90		450
	11G VERT	16"	0.500		80		380
	12E VERT	16"	0.500		70		680
	12F VERT	16"	0.500		70		710
	12G VERT	16"	0.500		80		380
APPROACH RAMP	13AA VERT	16"	0.500		70		200
	13BB VERT	16"	0.500		70	50	210
	13BB BATTER	16"	0.500	2V:1H	70	81	81
	13CC VERT	16"	0.500		70	54	210
	13CC BATTER	16"	0.500	2V:1H	70	84	81
	13G VERT	16"	0.500		70		110
	14AA VERT	16"	0.500		70		150
	14BB VERT	16"	0.500		70		160
	14CC VERT	16"	0.500		70		160
	14G VERT	16"	0.500		70		90
CANOPY FND.	3A' VERT	16"	0.500		90		100

RETAINING WALL PILE SCHEDULE SUMMARY TABLE

PILE DESIGNATION	NORTHING	EASTING	DIA. (INCH)	THICKNESS (INCH)	SUPPLY LENGTH (ft)	ULTIMATE LOAD (kips)
						COMPRESSION
1	2361819.69	2544107.73	24	0.750	60	500
2	2361816.99	2544103.94	24	0.750	60	500
3	2361809.47	2544108.93	24	0.750	60	950
4	2361801.11	2544114.47	24	0.750	60	500
5	2361792.78	2544120.00	24	0.750	60	500
6	2361784.46	2544125.51	24	0.750	60	950
7	2361776.11	2544131.05	24	0.750	70	500
8	2361767.78	2544136.58	24	0.750	70	500
9	2361759.45	2544142.10	24	0.750	70	950
10	2361751.11	2544147.63	24	0.750	70	500
11	2361742.78	2544153.16	24	0.750	70	500
12	2361734.44	2544158.68	24	0.750	70	950
13	2361731.88	2544169.00	24	0.750	80	500
14	2361729.74	2544179.60	24	0.750	80	500
15	2361727.59	2544190.19	24	0.750	80	500
16	2361725.44	2544200.79	24	0.750	80	950
17	2361718.06	2544207.73	24	0.750	70	500
18	2361709.73	2544213.26	24	0.750	70	500
19	2361701.39	2544218.78	24	0.750	70	950
20	2361699.36	2544228.81	24	0.750	70	500
21	2361697.33	2544238.84	24	0.750	70	500
22	2361695.30	2544248.86	24	0.750	70	500
23	2361693.27	2544258.89	24	0.750	70	500
24	2361691.24	2544268.91	24	0.750	70	700
25	2361689.21	2544278.94	24	0.750	70	700
26	2361687.18	2544288.97	24	0.750	70	500
27	2361675.04	2544296.58	24	0.750	70	950
28	2361664.59	2544303.14	24	0.750	70	500
29	2361654.14	2544309.70	24	0.750	70	950
30	2361643.69	2544316.25	24	0.750	70	500
31	2361633.24	2544322.81	24	0.750	70	950
32	2361623.10	2544329.17	24	0.750	70	500
33	2361612.97	2544335.53	24	0.750	70	950
34	2361602.84	2544341.89	24	0.750	70	500
35	2361592.70	2544348.24	24	0.750	70	950
36	2361597.33	2544357.52	24	0.750	70	500
SPARE	NA	NA	24	0.750	40	-

NOTES:

1. ALL PILES SHALL BE FABRICATED WITH AN APF INSIDE FLANGE OPEN CUTTING SHOE.
2. RETAINING WALL PILES ARE OWNER SUPPLIED, COORDINATE WITH OWNER FOR STORAGE LOCATION, CONTRACTOR SHALL SORT AND DELIVER PILES FROM STORAGE LOCATION TO JOB SITE, INCIDENTAL TO PILE INSTALLATION BID ITEM.

CITY & BOROUGH OF JUNEAU DOCKS & HARBORS

REVISIONS

REV.	DATE	DESCRIPTION	DWN.	CKD.	APP.

PND ENGINEERS, INC.
9360 Glacier Highway Ste 100
Juneau, Alaska 99801
Phone: 907-586-2093
Fax: 907-586-2099
www.pndengineers.com

DESIGN: MDS CHECKED: CRS
DRAWN: PJD APPROVED: CRS
SCALE: NTS

STATE OF ALASKA 49 TH Charles R. Somerville CE-8845 REGISTERED PROFESSIONAL ENGINEER
DATE: 5/23/2019

DOWNTOWN WATERFRONT IMPROVEMENTS PHASE I
CBJ CONTRACT NO. DH19-014

SHEET TITLE: **PILE SCHEDULES**

PND PROJECT NO.: 182045 C.A.N. NO.: AECC250

S1.02

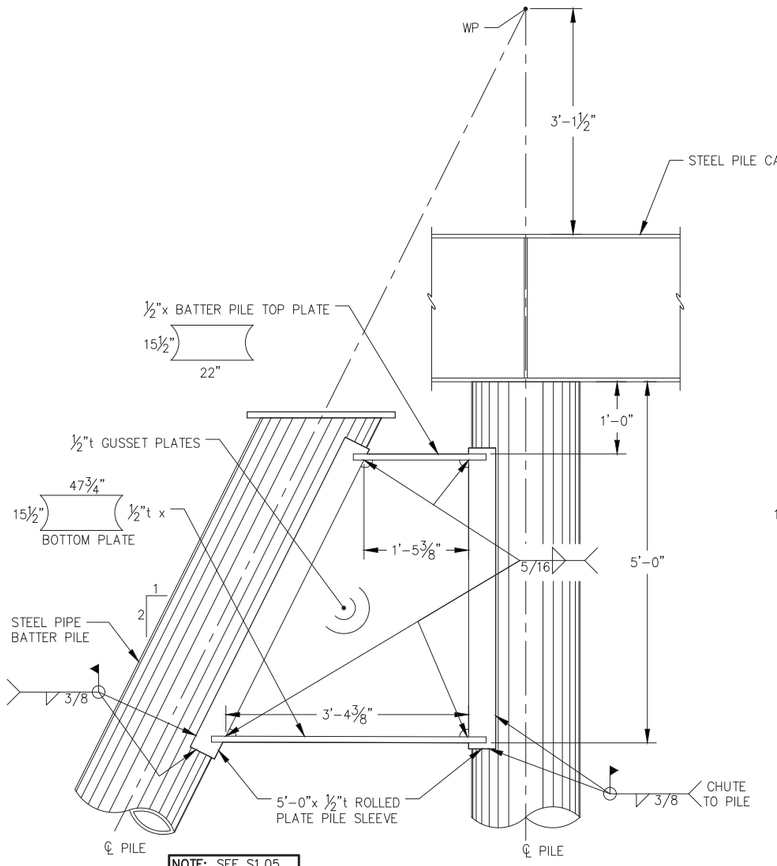

NOTE: SEE S1.05 FOR VERTICAL PILE WELD TO CAP

ELEVATION

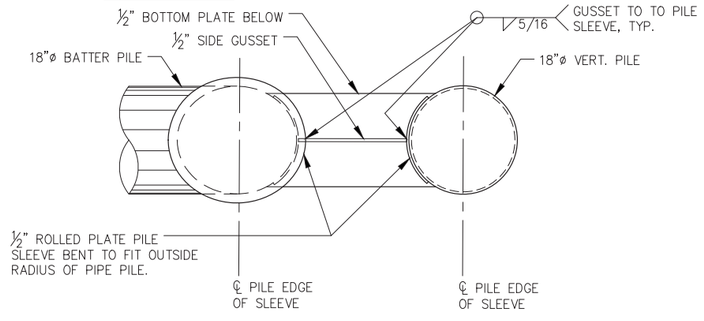

TYPICAL 18" SIDE BATTER PILE CONNECTION PLAN

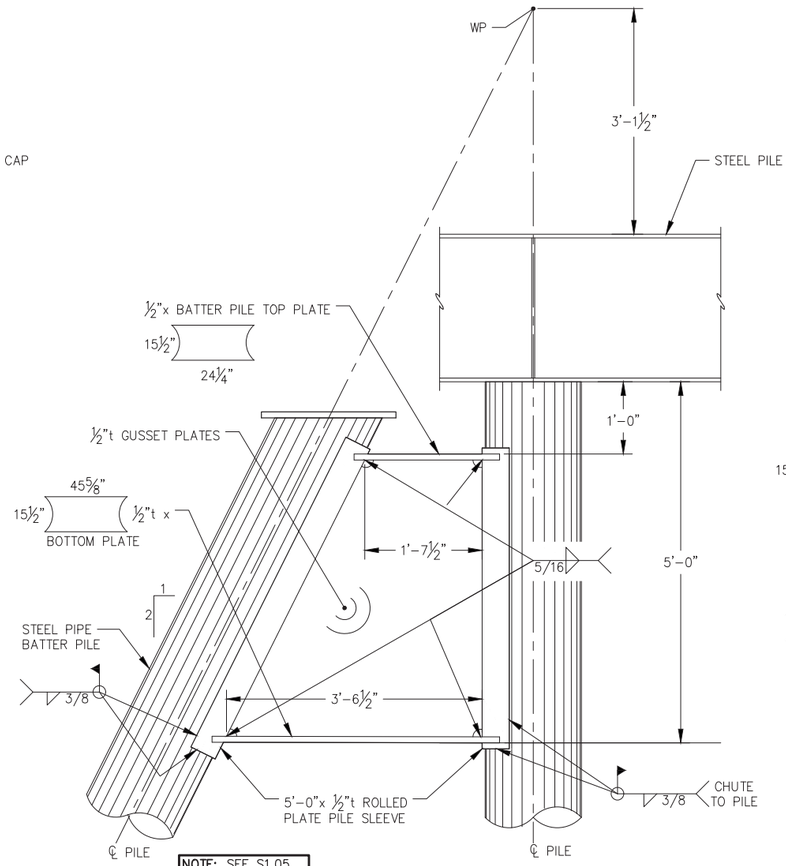

NOTE: SEE S1.05 FOR VERTICAL PILE WELD TO CAP

ELEVATION

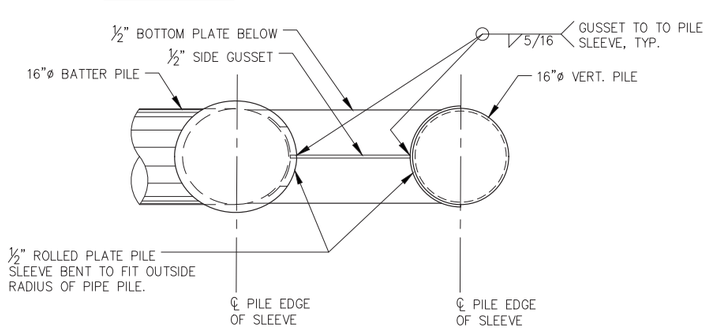

TYPICAL 16" SIDE BATTER PILE CONNECTION PLAN AT W24 PILE CAP

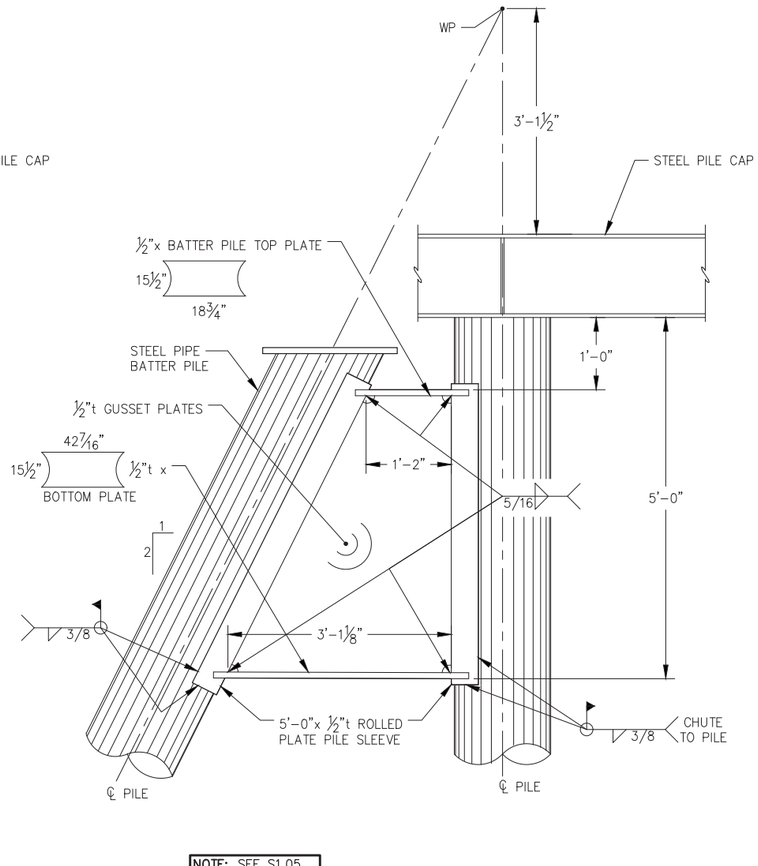

NOTE: SEE S1.05 FOR VERTICAL PILE WELD TO CAP

ELEVATION

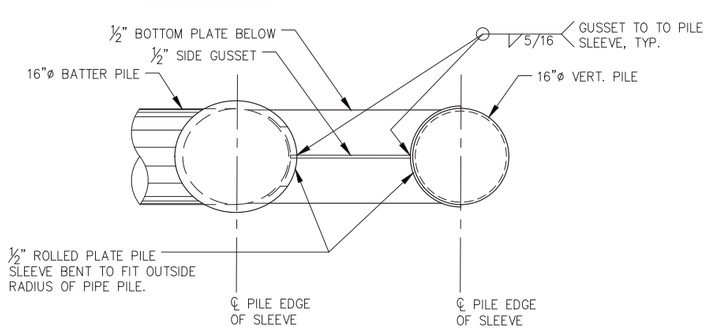

TYPICAL 16" SIDE BATTER PILE CONNECTION PLAN AT HP14 PILE CAP

REVISIONS

REV.	DATE	DESCRIPTION	DWN.	CKD.	APP.

P N D ENGINEERS, INC.
9360 Glacier Highway Ste 100
Juneau, Alaska 99801
Phone: 907-586-2093
Fax: 907-586-2099
www.pndengineers.com

DESIGN: MDS CHECKED: CRS
DRAWN: KLL APPROVED: CRS
SCALE: NTS
DATE: 5/23/2019

STATE OF ALASKA 49TH Charles R. Somerville CE-8845 REGISTERED PROFESSIONAL ENGINEER

DOWNTOWN WATERFRONT IMPROVEMENTS PHASE I
CBJ CONTRACT NO. DH19-014

SHEET TITLE:
PILE TYPICAL DETAILS

PND PROJECT NO.: 182045 C.A.N. NO.: AECC250

S1.03

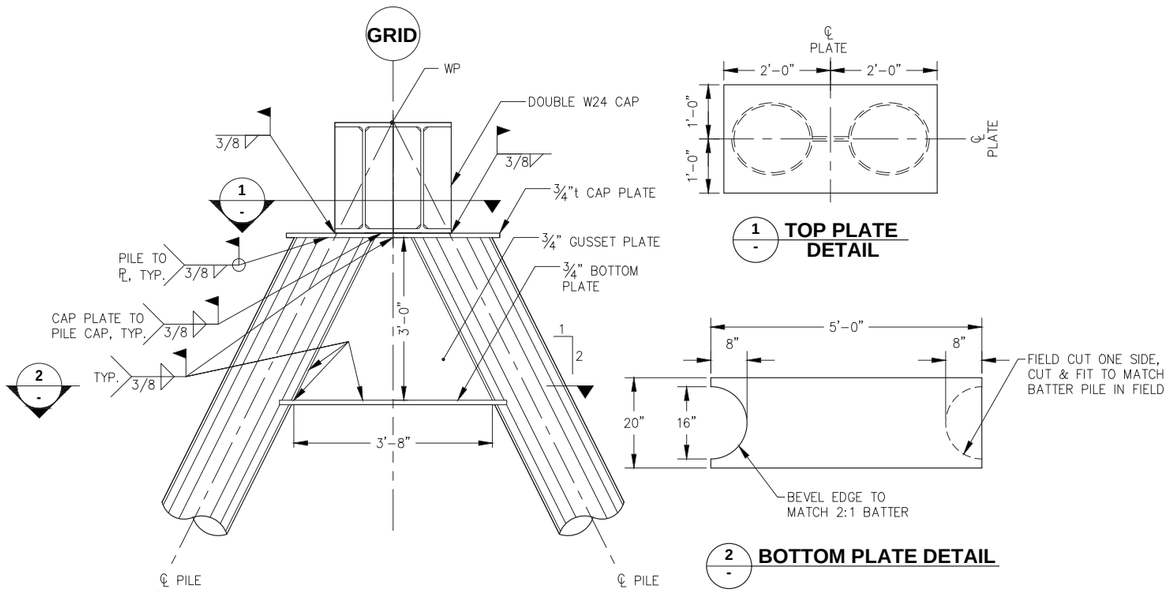

TYPICAL DOUBLE BATTER PILE CONNECTION

1 - **TOP PLATE DETAIL**

2 - **BOTTOM PLATE DETAIL**

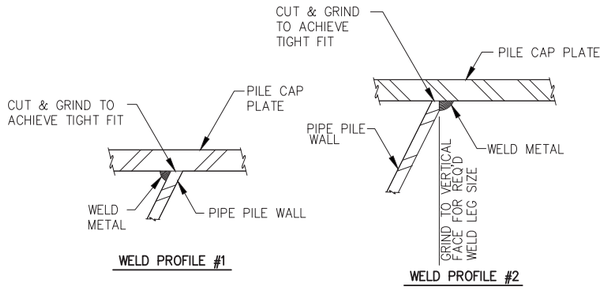

WELD PROFILE #1

WELD PROFILE #2

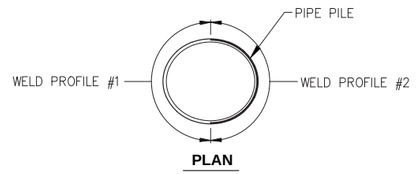

PLAN

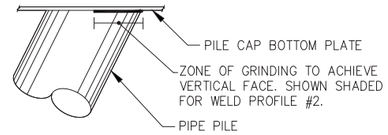

BATTER PILE TOP PLATE ELEVATION

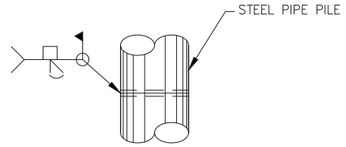

TYPICAL SPLICE ELEVATION

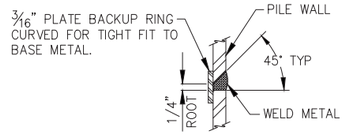

TYPICAL SPLICE SECTION

TYPICAL PILE CONNECTION DETAILS

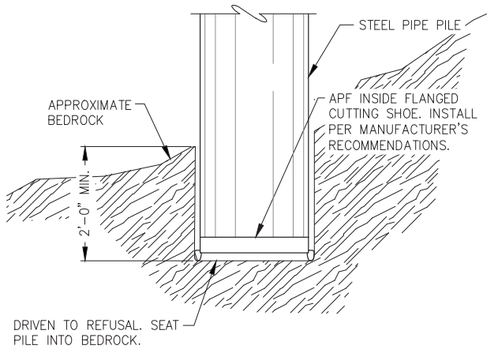

PILE DRIVING TIP DETAIL

REVISIONS

REV.	DATE	DESCRIPTION	DWN.	CKD.	APP.

P N D ENGINEERS, INC.
9360 Glacier Highway Ste 100
Juneau, Alaska 99801
Phone: 907-586-2093
Fax: 907-586-2099
www.pndengineers.com

DESIGN: MDS CHECKED: CRS
DRAWN: KLL APPROVED: CRS
SCALE: NTS
DATE: 5/23/2019

STATE OF ALASKA 49TH Charles R. Somerville CE-8845 REGISTERED PROFESSIONAL ENGINEER

DOWNTOWN WATERFRONT IMPROVEMENTS PHASE I
CBJ CONTRACT NO. DH19-014

SHEET TITLE: **PILE TYPICAL DETAILS**

S1.04

PND PROJECT NO.: 182045 C.A.N. NO.: AECC250

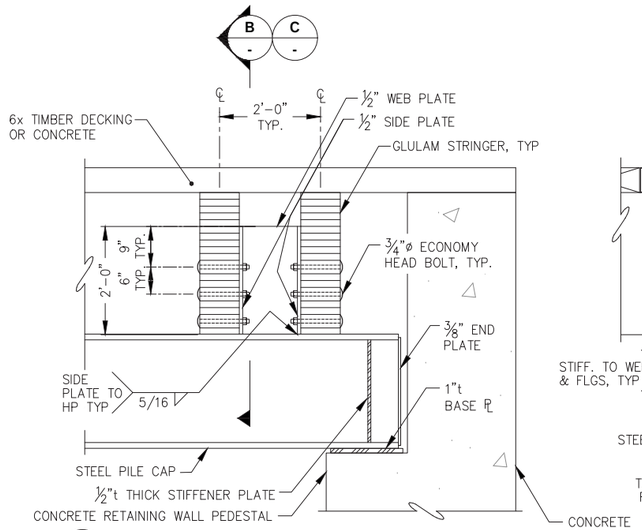

A - TYPICAL STRINGER CONNECTION ELEVATION

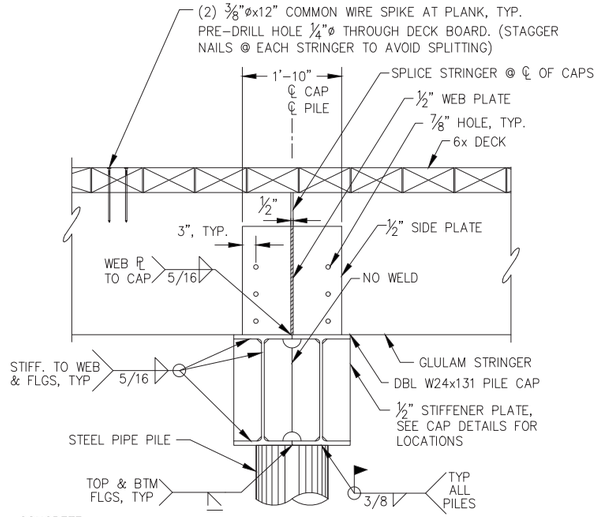

B - TYPICAL PILE CAP SECTION AT TIMBER DECK

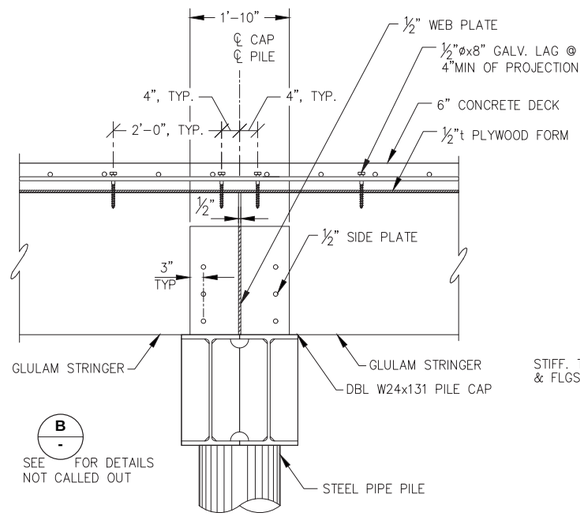

C - TYPICAL PILE CAP SECTION AT CONCRETE DECK

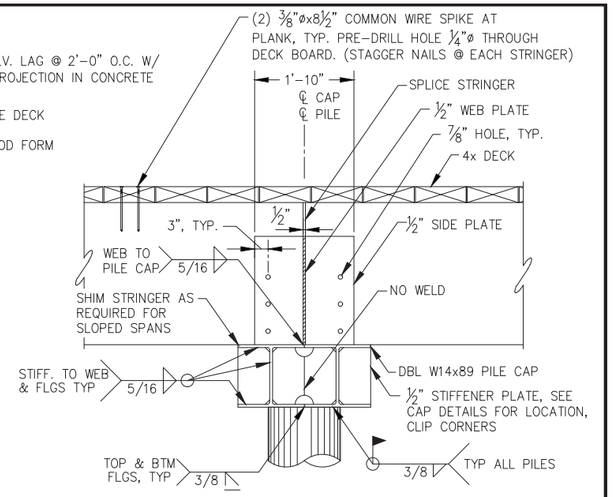

D - TYPICAL PILE CAP DETAIL AT ADA APPROACH RAMP

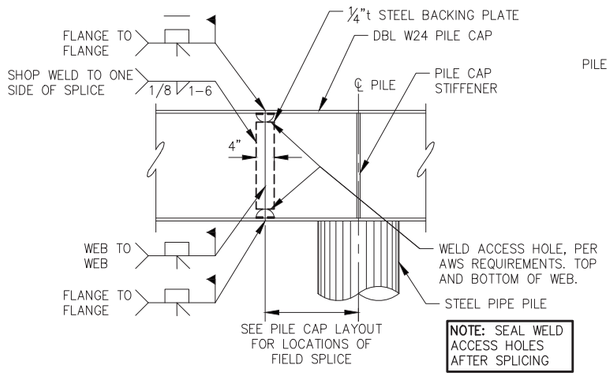

E - TYPICAL PILE CAP FIELD SPLICE DETAIL

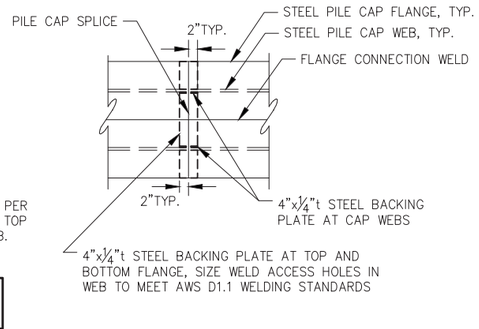

F - TYPICAL STEEL PILE CAP FIELD SPLICE DETAIL

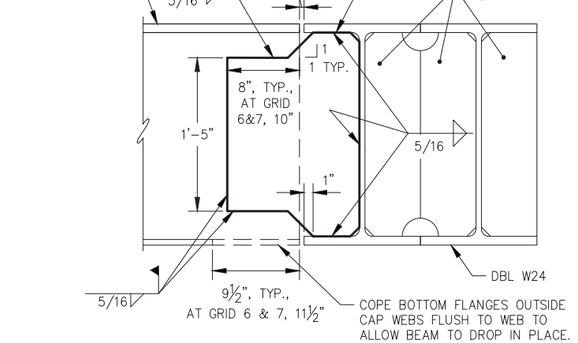

G - TYPICAL PILE CAP CONNECTION DETAIL

NOTE: ℄ NOT REQUIRED AT PILE CAP TO PILE CAP CONNECTIONS.

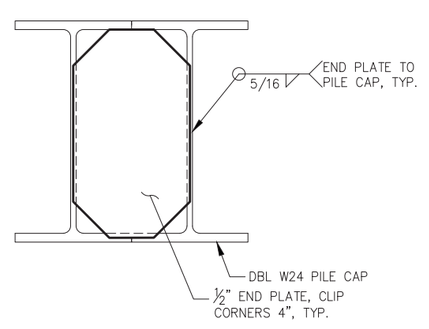

H - TYPICAL PILE END PLATE DETAIL AT DBL W24 PILE CAPS

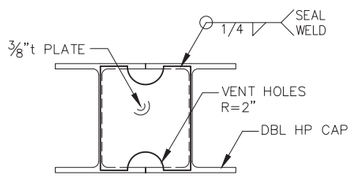

I - PILE CAP END PLATE FOR DOUBLE HP PILE CAPS

REVISIONS

REV.	DATE	DESCRIPTION	DWN.	CKD.	APP.

PND ENGINEERS, INC.
9360 Glacier Highway Ste 100
Juneau, Alaska 99801
Phone: 907-586-2093
Fax: 907-586-2099
www.pndengineers.com

DESIGN: MDS CHECKED: CRS
DRAWN: KLL APPROVED: CRS
SCALE: NTS
DATE: 5/23/2019

STATE OF ALASKA 49 TH — Charles R. Somerville CE-8845 — REGISTERED PROFESSIONAL ENGINEER

DOWNTOWN WATERFRONT IMPROVEMENTS PHASE I
CBJ CONTRACT NO. DH19-014

SHEET TITLE: **TYPICAL DOCK FRAMING DETAILS**

PND PROJECT NO.: 182045 C.A.N. NO.: AECC250

S1.05

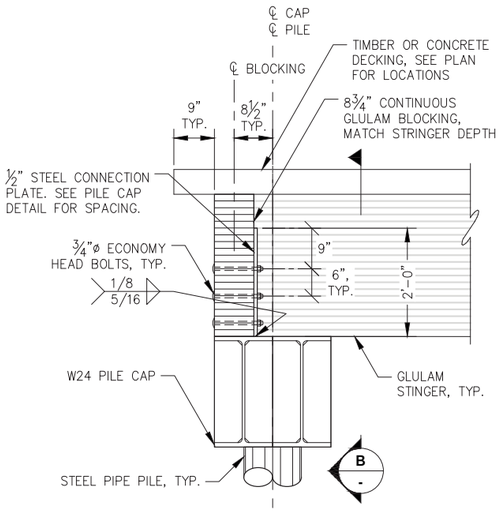

A - TYPICAL BLOCKING CONNECTION PLATE AT GRID G PILE CAP

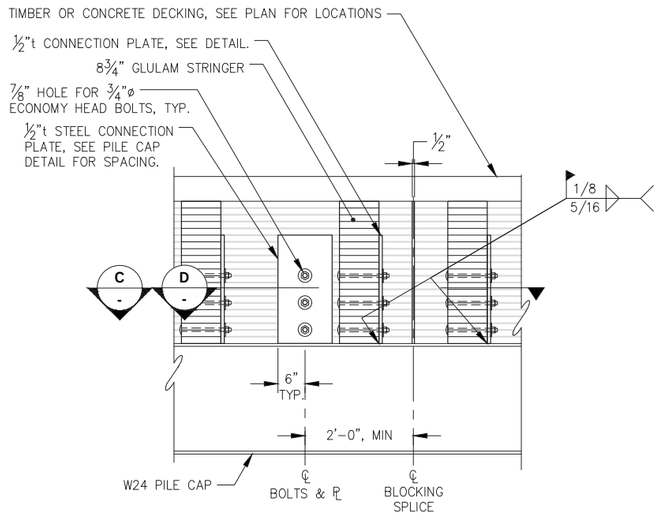

B - TYPICAL STRINGER CONNECTION ELEVATION AT DIAGONAL GLULAM BLOCKING

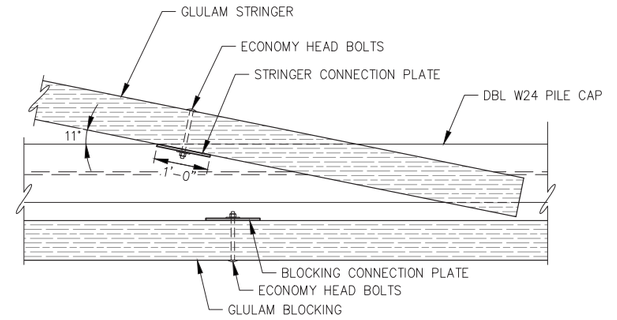

C - TYPICAL ANGLE CONNECTION PLATE AT CONTINUOUS GLULAM BLOCKING TYPE 1 (11°)

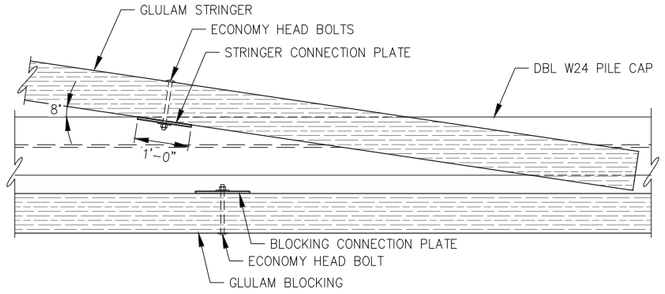

D - TYPICAL ANGLE CONNECTION PLATE AT CONTINUOUS GLULAM BLOCKING TYPE 2 (8°)

E - STRINGER TO CONCRETE WALL CONNECTION SECTION

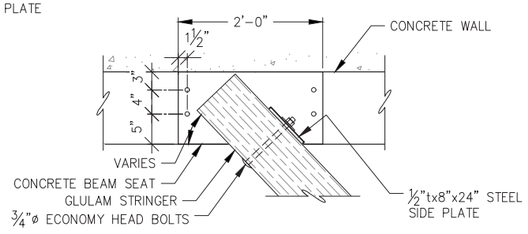

F - STRINGER TO CONCRETE WALL CONNECTION PLAN

CITY & BOROUGH OF JUNEAU — DOCKS & HARBORS

REVISIONS

REV.	DATE	DESCRIPTION	DWN.	CKD.	APP.

PND ENGINEERS, INC.
9360 Glacier Highway Ste 100
Juneau, Alaska 99801
Phone: 907-586-2093
Fax: 907-586-2099
www.pndengineers.com

DESIGN: MDS CHECKED: CRS
DRAWN: KLL APPROVED: CRS
SCALE: NTS
DATE: 5/23/2019

STATE OF ALASKA — 49TH — Charles R. Somerville CE-8845 — REGISTERED PROFESSIONAL ENGINEER

DOWNTOWN WATERFRONT IMPROVEMENTS PHASE I
CBJ CONTRACT NO. DH19-014

SHEET TITLE: **TYPICAL DOCK FRAMING DETAILS**

PND PROJECT NO.: 182045 C.A.N. NO.: AECC250

S1.06

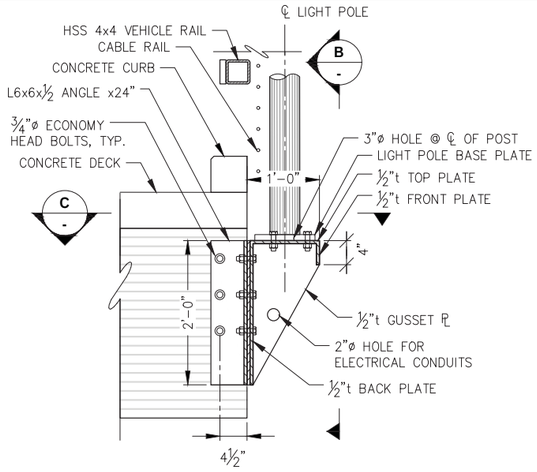

A - TYPICAL LIGHT POLE BRACKET TYPE 1 SECTION END STRINGER

(3) EACH, SEE CIVIL FOR LOCATIONS

NOTE:
USE SIMILAR BRACKET AND BOLT PATTERN FOR LIGHT POLE MOUNT @ CONCRETE RETAINING WALL, MOUNT BACK PLATE FLUSH WITH CONCRETE WALL AND EMBED ANCHOR BOLTS 8" MIN.

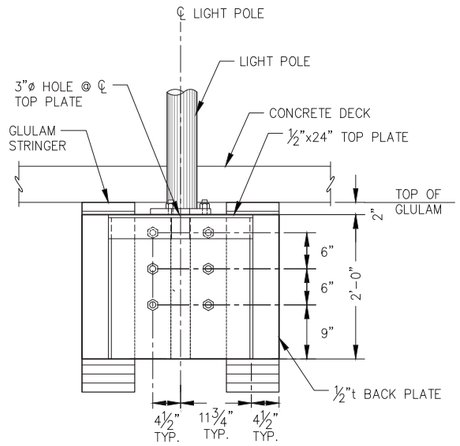

B - LIGHT POLE BRACKET DETAIL END STRINGER

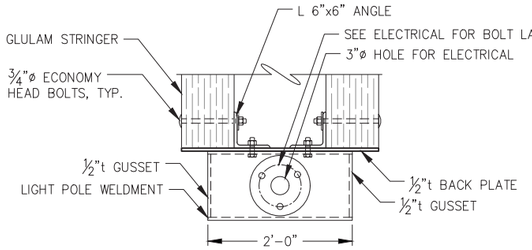

C - TYPICAL LIGHT POLE BRACKET PLAN END STRINGER

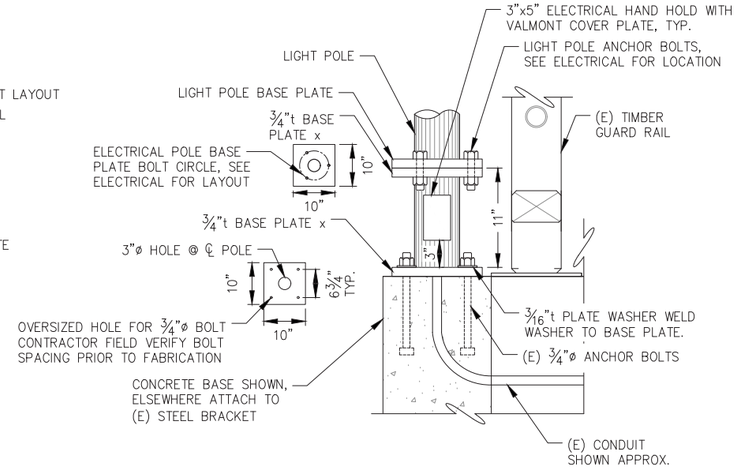

D - LIGHT POLE BRACKET TYPE 2 EXTENSION

(13) EACH, SEE ELECTRICAL FOR LOCATIONS

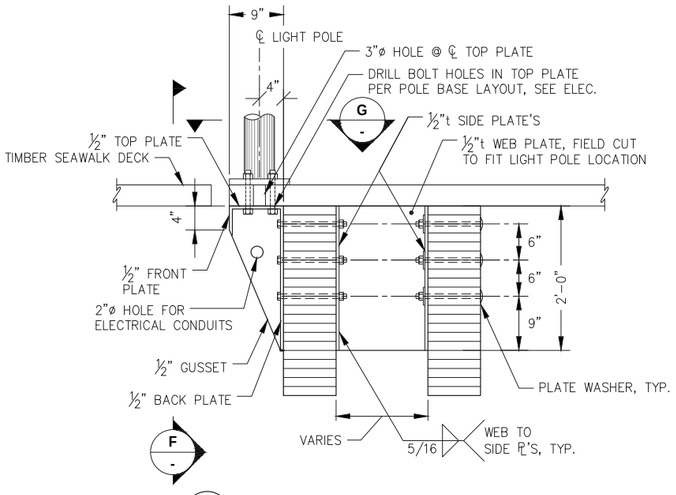

E - LIGHT POLE BRACKET TYPE 3 DETAIL STRINGER SIDE MOUNT

(6) EACH, SEE CIVIL FOR LOCATIONS

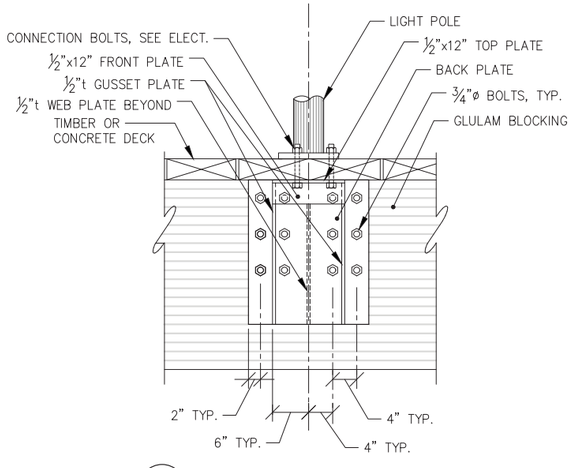

F - TYPICAL LIGHT POLE BRACKET SECTION STRINGER SIDE MOUNT

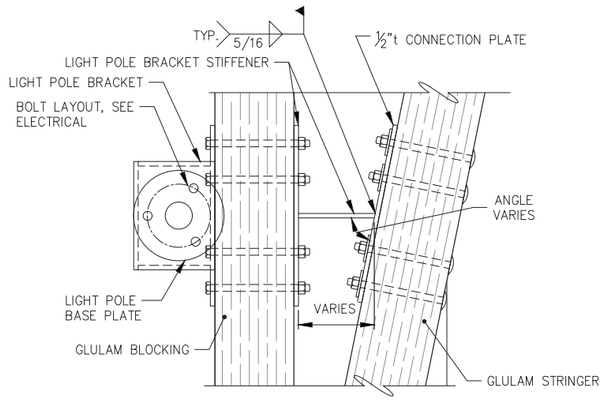

G - TYPICAL LIGHT POLE BRACKET STRINGER

REVISIONS

REV.	DATE	DESCRIPTION	DWN.	CKD.	APP.

PND ENGINEERS, INC.
9360 Glacier Highway Ste 100
Juneau, Alaska 99801
Phone: 907-586-2093
Fax: 907-586-2099
www.pndengineers.com

DESIGN: MDS CHECKED: CRS
DRAWN: KLL APPROVED: CRS
SCALE: NTS
DATE: 5/23/2019

STATE OF ALASKA 49TH — Charles R. Somerville CE-8845 REGISTERED PROFESSIONAL ENGINEER

DOWNTOWN WATERFRONT IMPROVEMENTS PHASE I
CBJ CONTRACT NO. DH19-014

SHEET TITLE: **LIGHT POLE TYPICAL DETAILS**

S1.07

PND PROJECT NO.: 182045 C.A.N. NO.: AECC250

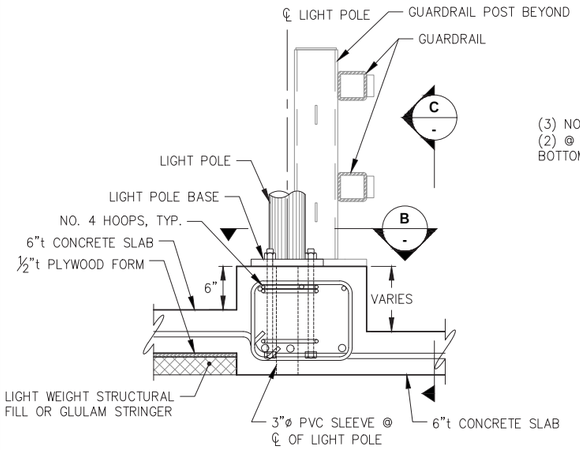

A - LIGHT POLE BRACKET TYPE 4 SECTION ON CURB

(2) REQUIRED SEE CIVIL FOR LOCATION

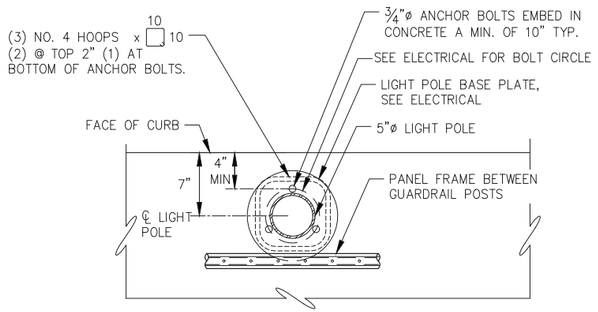

B - LIGHT POLE BRACKET PARTIAL PLAN AT CURB

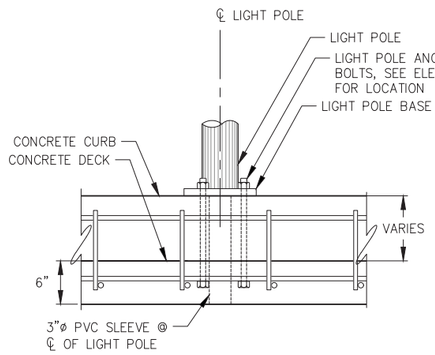

C - LIGHT POLE BRACKET DETAIL ON CONCRETE CURB

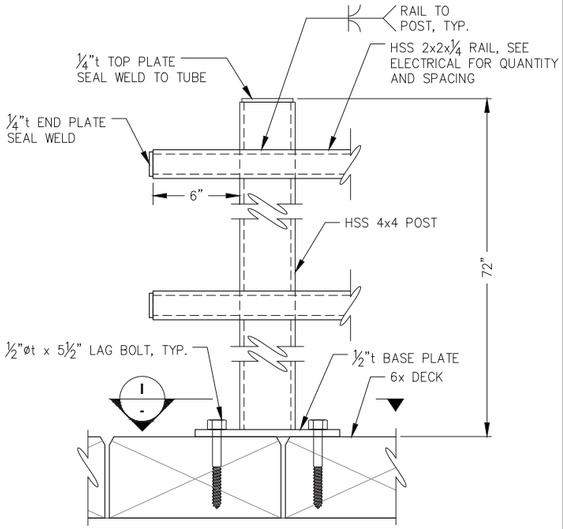

D - TYPICAL ELECTRICAL RACK POST ELEVATION

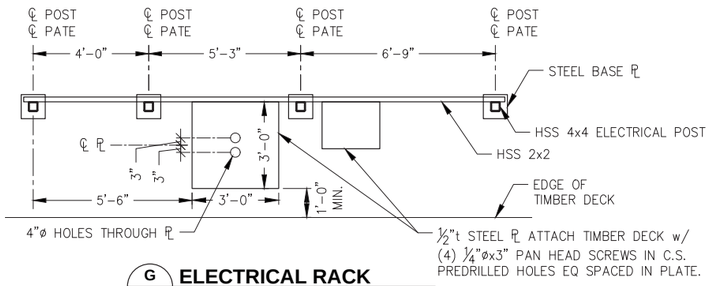

G - ELECTRICAL RACK PARTIAL FRAMING PLAN

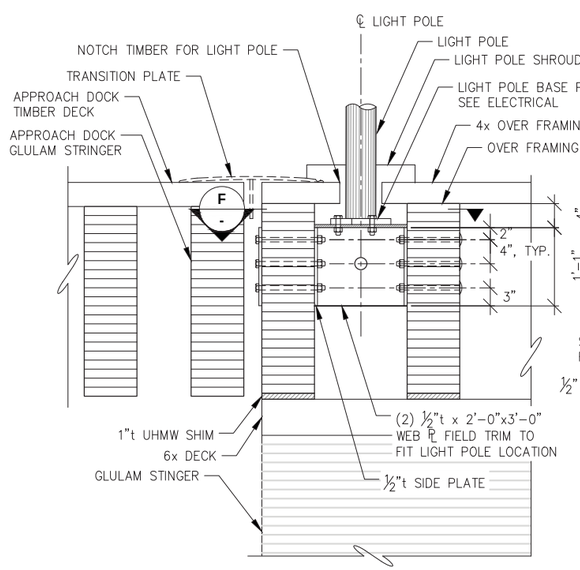

E - LIGHT POLE BRACKET TYPE 5 DOCK AND OVERFRAMING

(1) REQUIRED SEE CIVIL FOR LOCATION

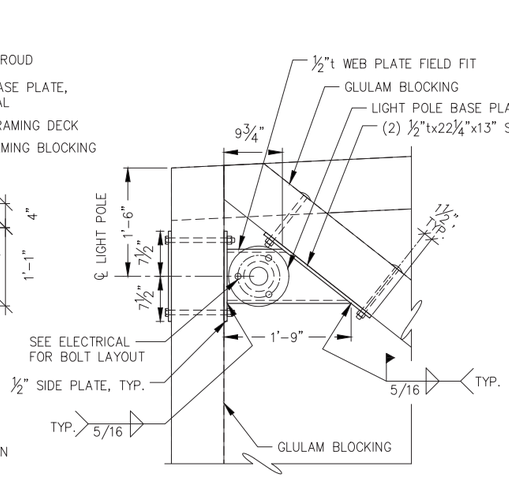

F - LIGHT POLE CONNECTION DETAIL AT OVER FRAMING AND APPROACH DOCK

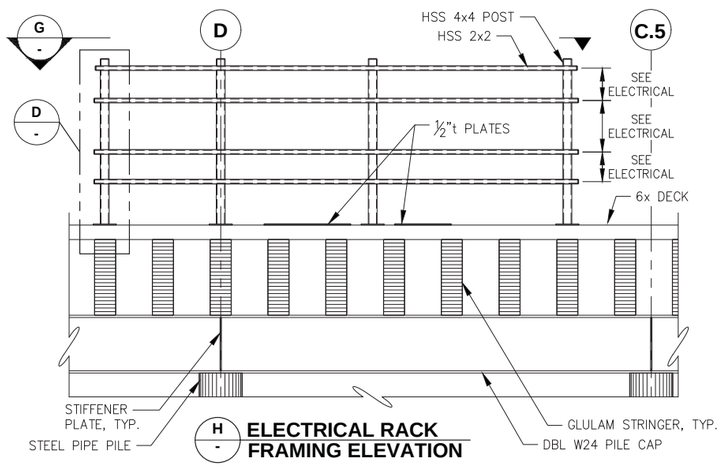

H - ELECTRICAL RACK FRAMING ELEVATION

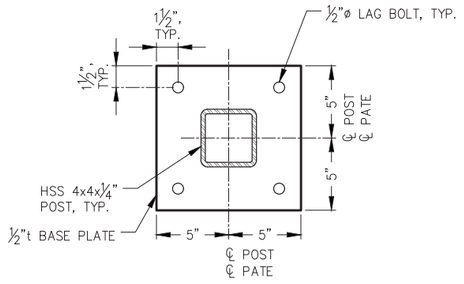

I - ELECTRICAL RACK BASE PLATE

REVISIONS

REV.	DATE	DESCRIPTION	DWN.	CKD.	APP.

CITY & BOROUGH OF JUNEAU DOCKS & HARBORS

PND ENGINEERS, INC.
9360 Glacier Highway Ste 100
Juneau, Alaska 99801
Phone: 907-586-2093
Fax: 907-586-2099
www.pndengineers.com

DESIGN: MDS CHECKED: CRS
DRAWN: KLL APPROVED: CRS
SCALE: NTS

STATE OF ALASKA 49TH — Charles R. Somerville CE-8845 — REGISTERED PROFESSIONAL ENGINEER
DATE: 5/23/2019

DOWNTOWN WATERFRONT IMPROVEMENTS PHASE I
CBJ CONTRACT NO. DH19-014

SHEET TITLE:
LIGHT POLE TYPICAL DETAILS

PND PROJECT NO.: 182045 C.A.N. NO.: AECC250

S1.08

WALL LAYOUT AND ELEVATIONS

POINT	NORTHING	EASTING	ELEV. FINISHED GRADE	DESCRIPTION
1	2361822.39	2544111.55	28.52	OUTSIDE FACE OF WALL AT END
2	2361816.99	2544103.94	28.52	℄ PILE
3	2361734.44	2544158.68	28.52	℄ PILE
4	2361724.07	2544202.55	28.52	OUTSIDE FACE OF WALL AT ANGLE POINT
5	2361701.39	2544218.78	28.52	℄ PILE
6	2361687.18	2544288.97	28.52	℄ PILE
7	2361592.70	2544348.24	27.17	℄ PILE
8	2361600.84	2544365.92	27.17	OUTSIDE FACE OF WALL AT END

NOTE:
FINISHED GRADE= TOP OF SLAB/TIMBER DECK AT ℄ CONCRETE WALL.

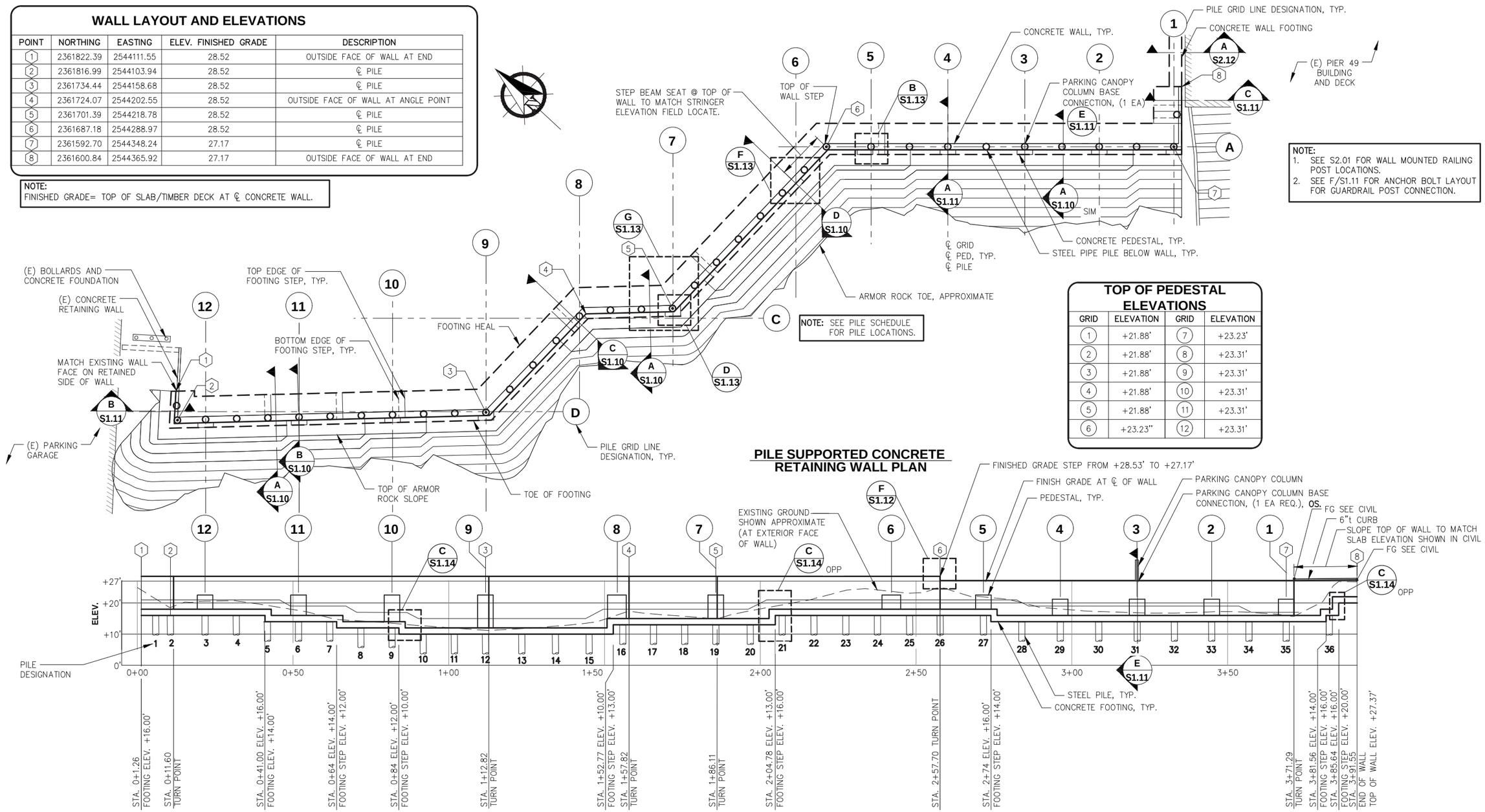

NOTE:
1. SEE S2.01 FOR WALL MOUNTED RAILING POST LOCATIONS.
2. SEE F/S1.11 FOR ANCHOR BOLT LAYOUT FOR GUARDRAIL POST CONNECTION.

NOTE: SEE PILE SCHEDULE FOR PILE LOCATIONS.

TOP OF PEDESTAL ELEVATIONS

GRID	ELEVATION	GRID	ELEVATION
1	+21.88'	7	+23.23'
2	+21.88'	8	+23.31'
3	+21.88'	9	+23.31'
4	+21.88'	10	+23.31'
5	+21.88'	11	+23.31'
6	+23.23"	12	+23.31'

PILE SUPPORTED CONCRETE RETAINING WALL PLAN

RETAINING WALL PROFILE

NOTE:
1. STATIONING IS AT SEAWARD FACE OF WALL
2. TOP OF CONCRETE WALL = COORDINATE FINISH GRADE WITH CIVIL PLANS, SLAB AND TIMBER DECKS NOT SHOWN FOR CLARITY
3. STA. FOOTING ELEVATIONS = BOTTOM OF FOOTING ELEVATION.

NOTE: OS INDICATES OWNER SUPPLIED MATERIALS

CITY & BOROUGH OF JUNEAU DOCKS & HARBORS

REVISIONS

REV.	DATE	DESCRIPTION	DWN.	CKD.	APP.

PND ENGINEERS, INC.
9360 Glacier Highway Ste 100
Juneau, Alaska 99801
Phone: 907-586-2093
Fax: 907-586-2099
www.pndengineers.com

DESIGN: MDS CHECKED: CRS
DRAWN: KLL APPROVED: CRS
SCALE: SCALE IN FEET 0 15 30 FT.

STATE OF ALASKA 49TH Charles R. Somerville CE-8845 REGISTERED PROFESSIONAL ENGINEER
DATE: 5/23/2019

DOWNTOWN WATERFRONT IMPROVEMENTS PHASE I
CBJ CONTRACT NO. DH19-014

SHEET TITLE: **CONCRETE RETAINING WALL PLAN AND PROFILE**

PND PROJECT NO.: 182045 C.A.N. NO.: AECC250

S1.09

Attachment G – BLD2019-0321

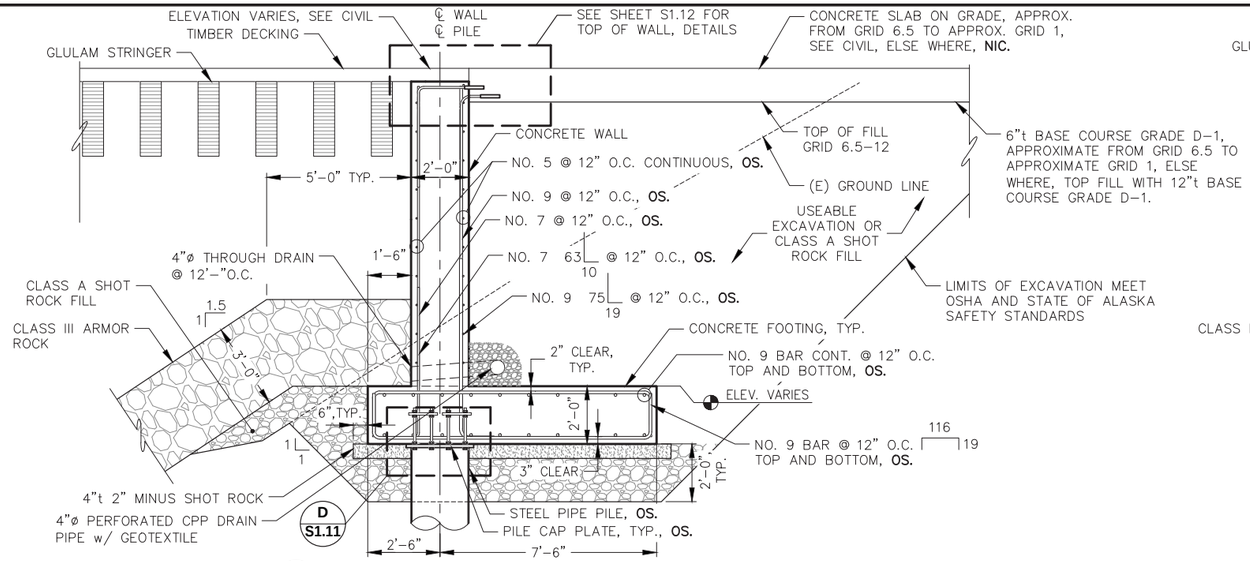

A S1.09 **TYPICAL RETAINING WALL SECTION**

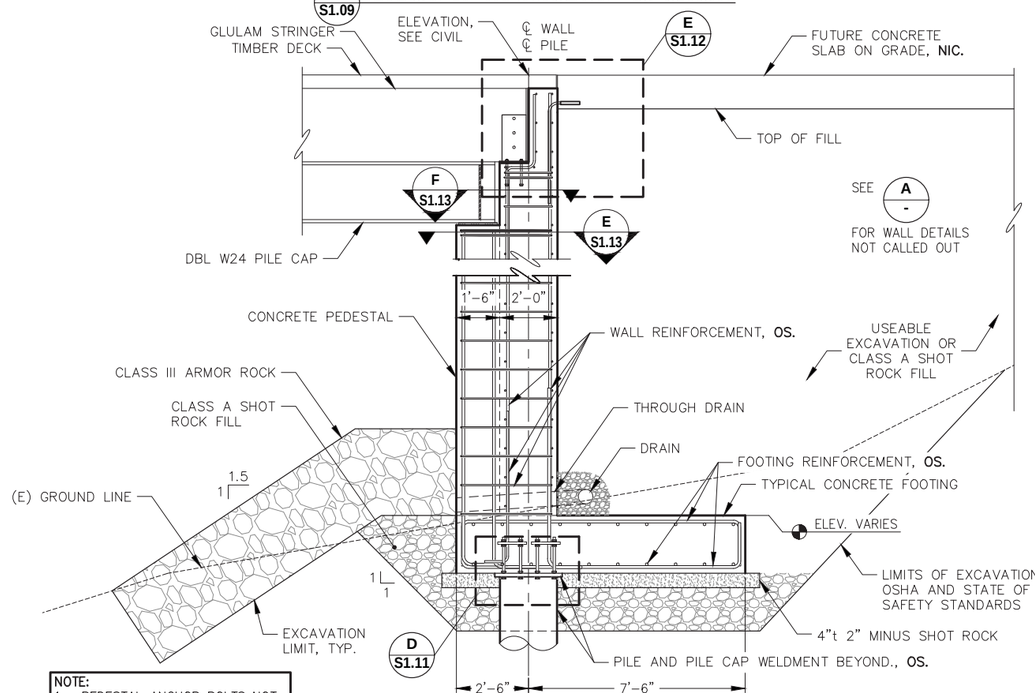

NOTE:
1. PEDESTAL ANCHOR BOLTS NOT SHOWN.
2. SEE SHEET S1.13 FOR PEDESTAL DETAILS NOT CALLED OUT

C S1.09 **RETAINING WALL SECTION WITH PEDESTAL**

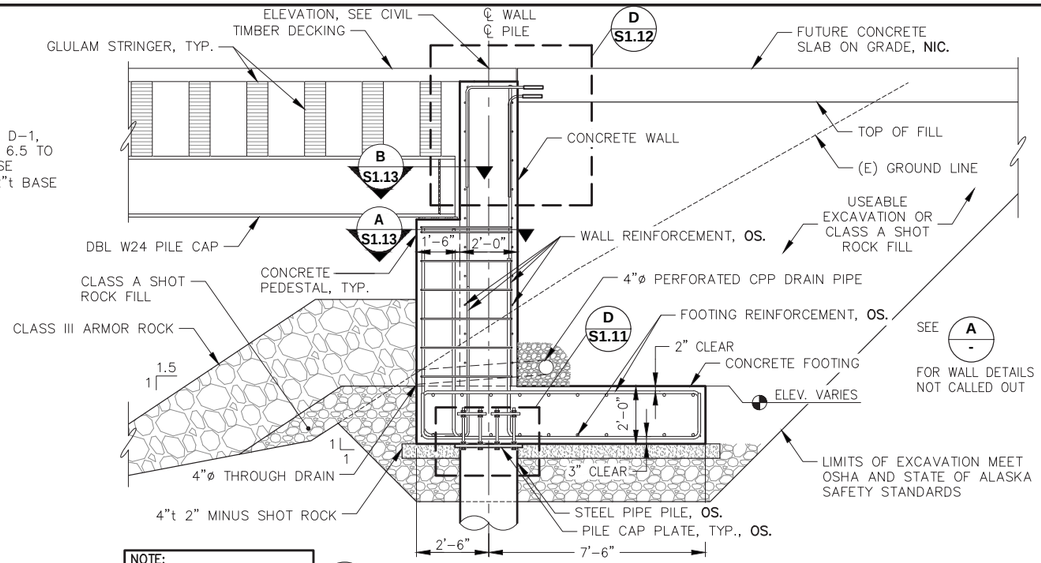

NOTE:
1. PEDESTAL ANCHOR BOLTS NOT SHOWN.
2. SEE SHEET S1.13 FOR PEDESTAL DETAILS NOT CALLED OUT

B S1.09 **RETAINING WALL SECTION WITH PEDESTAL**

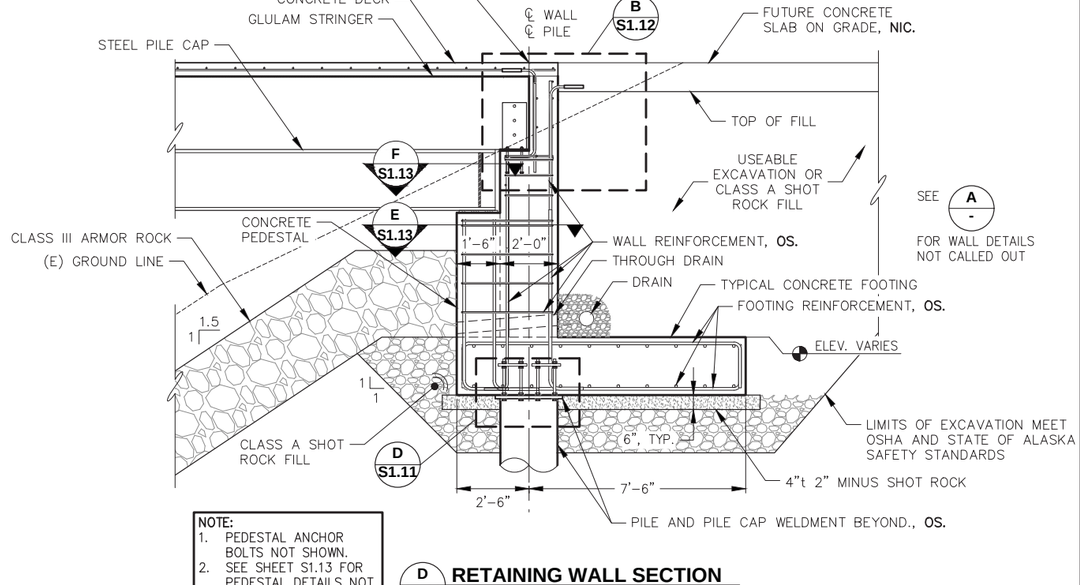

NOTE:
1. PEDESTAL ANCHOR BOLTS NOT SHOWN.
2. SEE SHEET S1.13 FOR PEDESTAL DETAILS NOT CALLED OUT

D S1.09 **RETAINING WALL SECTION WITH PEDESTAL**

NOTE: OS. INDICATES OWNER SUPPLIED MATERIALS

REVISIONS

REV.	DATE	DESCRIPTION	DWN.	CKD.	APP.

PND ENGINEERS, INC.
9360 Glacier Highway Ste 100
Juneau, Alaska 99801
Phone: 907-586-2093
Fax: 907-586-2099
www.pndengineers.com

DESIGN: MDS CHECKED: CRS
DRAWN: KLL APPROVED: CRS
SCALE: NTS
DATE: 5/23/2019

STATE OF ALASKA 49TH — Charles R. Somerville CE-8845 — REGISTERED PROFESSIONAL ENGINEER

DOWNTOWN WATERFRONT IMPROVEMENTS PHASE I
CBJ CONTRACT NO. DH19-014

SHEET TITLE: **CONCRETE RETAINING WALL SECTIONS**

PND PROJECT NO.: 182045 C.A.N. NO.: AECC250

S1.10

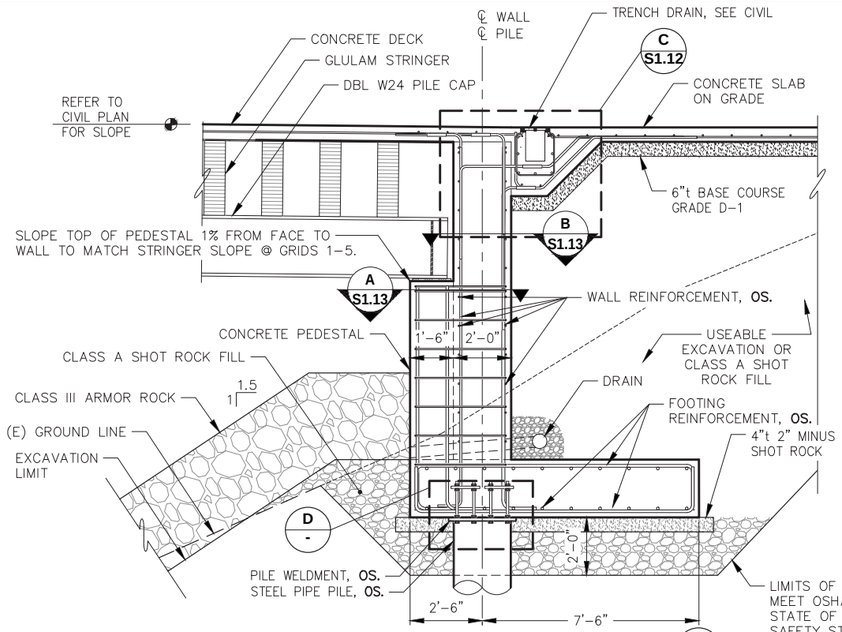

A S1.09 **RETAINING WALL SECTION**

NOTE:
1. PEDESTAL ANCHOR BOLTS NOT SHOWN.
2. SEE SHEET S1.13 FOR PEDESTAL DETAILS NOT CALLED OUT

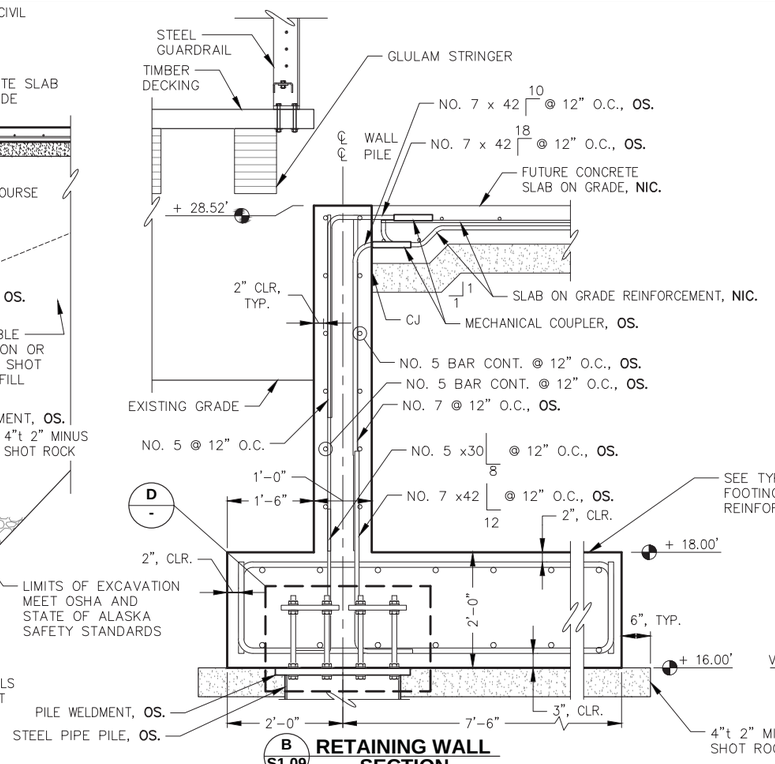

B S1.09 **RETAINING WALL SECTION**

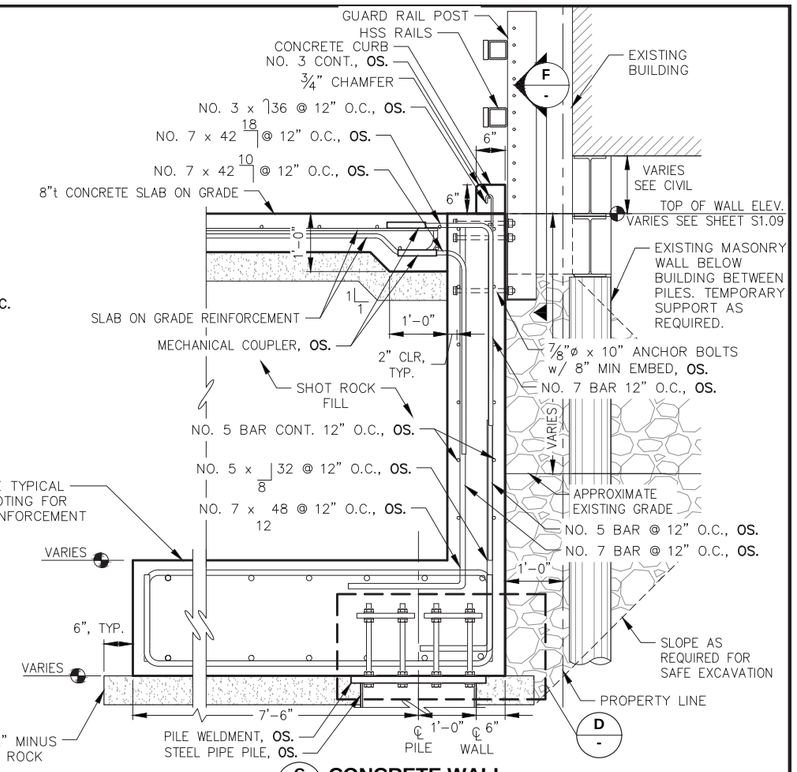

C S1.09 **CONCRETE WALL SECTION**

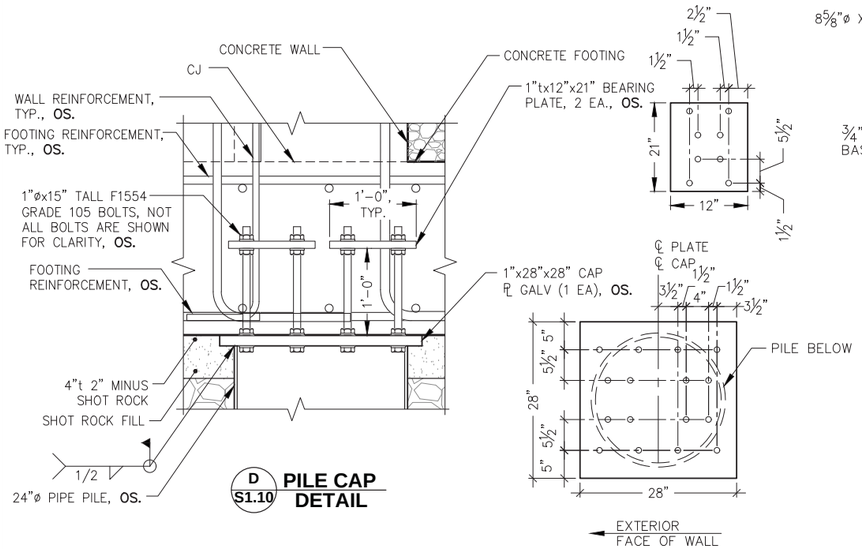

D S1.10 **PILE CAP DETAIL**

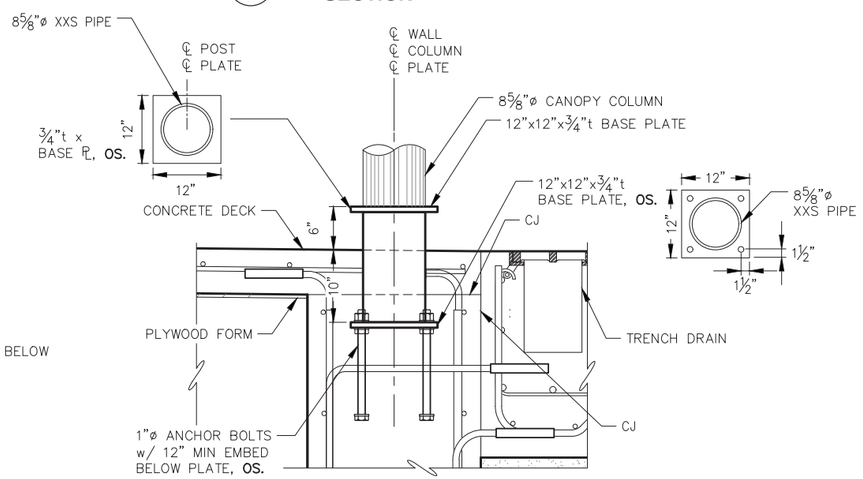

E S1.09 **CANOPY COLUMN BASE CONNECTION DETAIL** (1 EA REQ'D), OS.

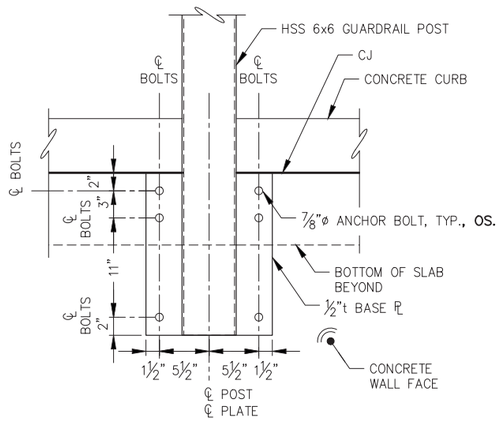

F - **VEHICLE RAIL POST CONNECTION DETAIL**

NOTE: OS. INDICATES OWNER SUPPLIED MATERIALS

REVISIONS

REV.	DATE	DESCRIPTION	DWN.	CKD.	APP.

P N D ENGINEERS, INC.
9360 Glacier Highway Ste 100
Juneau, Alaska 99801
Phone: 907-586-2093
Fax: 907-586-2099
www.pndengineers.com

DESIGN: MDS CHECKED: CRS
DRAWN: KLL APPROVED: CRS
SCALE: NTS

STATE OF ALASKA 49TH Charles R. Somerville CE-8845 REGISTERED PROFESSIONAL ENGINEER
DATE: 5/23/2019

DOWNTOWN WATERFRONT IMPROVEMENTS PHASE I
CBJ CONTRACT NO. DH19-014

SHEET TITLE: **CONCRETE RETAINING WALL SECTIONS AND DETAILS**

PND PROJECT NO.: 182045 C.A.N. NO.: AECC250

S1.11

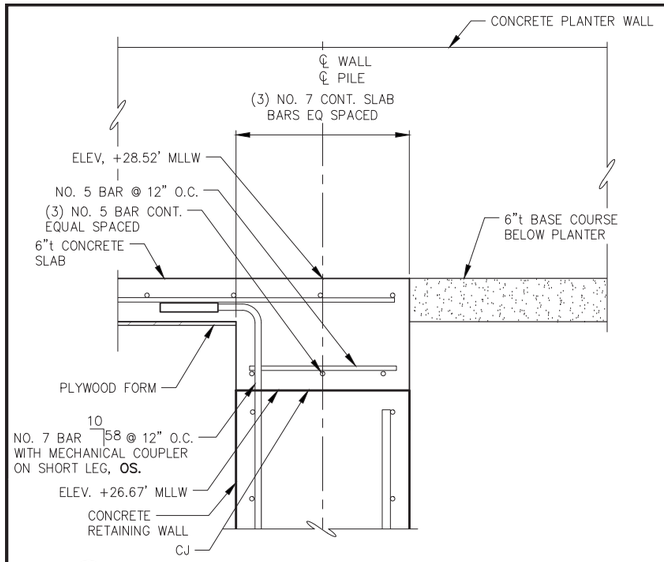

A / - TOP OF WALL CONCRETE DETAIL
STA. 2+57.70 TO STA. 2+62.16 END OF TRENCH DRAIN

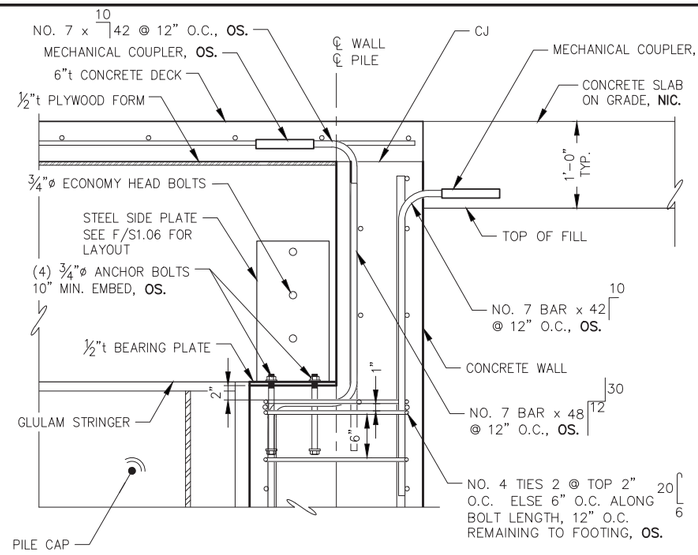

B / S1.10 TOP OF WALL DETAIL
CONCRETE DECK W/ BEAM SEAT

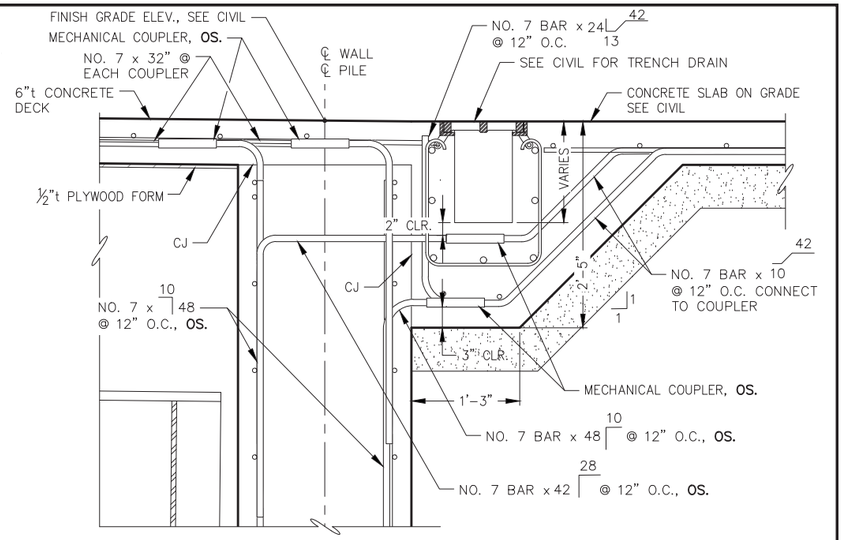

C / S1.11 TOP OF WALL DETAIL
CONCRETE DECK WITHOUT BEAM SEAT

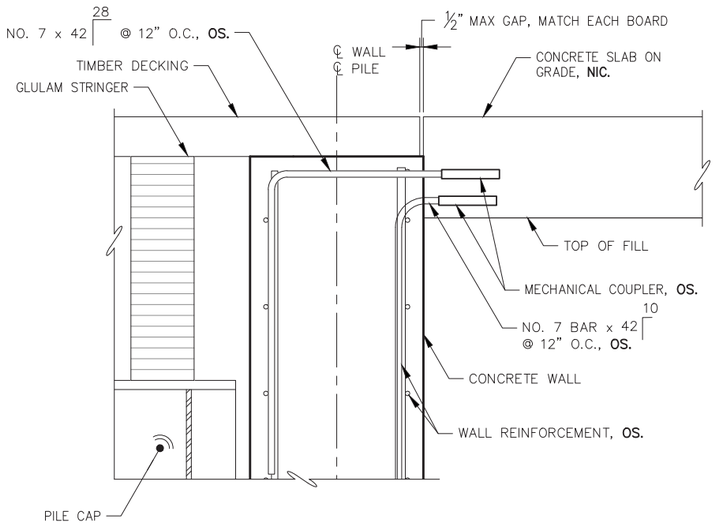

D / S1.10 TOP OF WALL DETAIL
TIMBER DECK WITHOUT BEAM SEAT

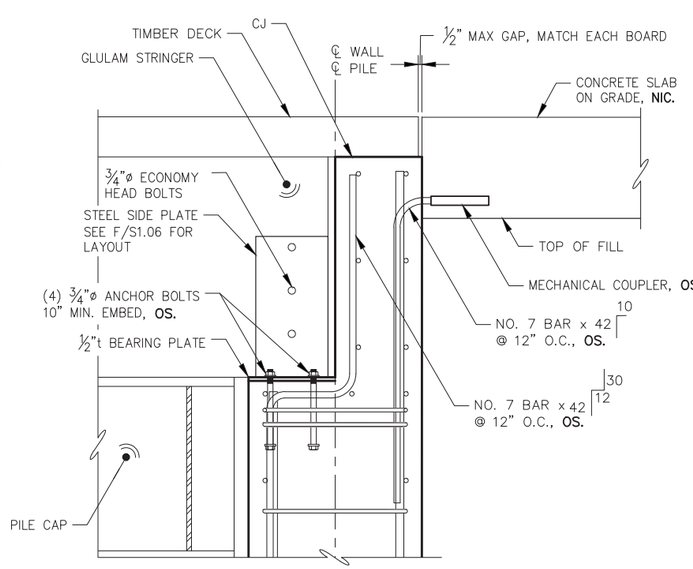

E / S1.10 TOP OF WALL DETAIL
TIMBER DECK WITH BEAM SEAT

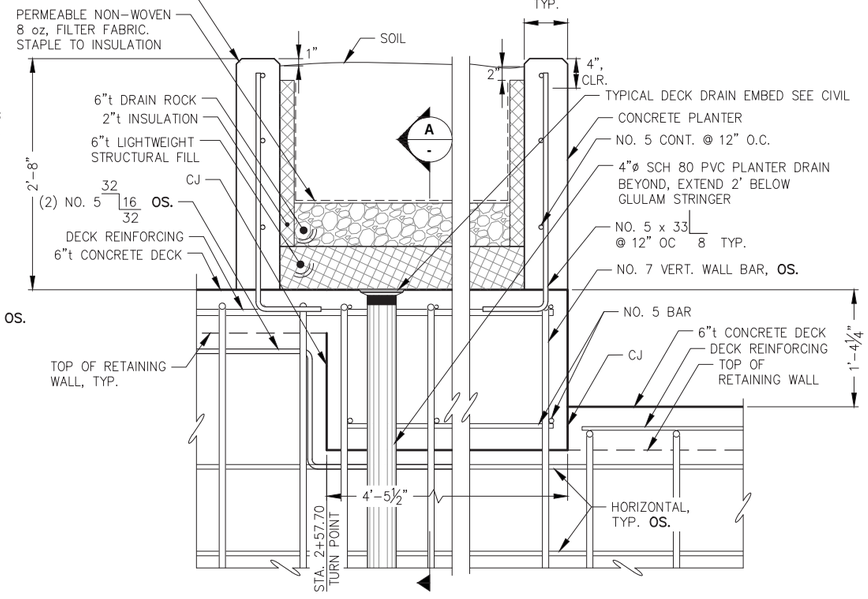

F / S1.09 TOP OF WALL STEP DETAIL
AND PLATER SECTION

NOTE: OS. INDICATES OWNER SUPPLIED MATERIALS

REVISIONS

REV.	DATE	DESCRIPTION	DWN.	CKD.	APP.

PND ENGINEERS, INC.
9360 Glacier Highway Ste 100
Juneau, Alaska 99801
Phone: 907-586-2093
Fax: 907-586-2099
www.pndengineers.com

STATE OF ALASKA 49 TH — Charles R. Somerville CE-8845 — REGISTERED PROFESSIONAL ENGINEER

DESIGN: MDS CHECKED: CRS
DRAWN: KLL APPROVED: CRS
SCALE: NTS
DATE: 5/23/2019

DOWNTOWN WATERFRONT IMPROVEMENTS PHASE I
CBJ CONTRACT NO. DH19-014

SHEET TITLE: **CONCRETE RETAINING WALL DETAILS**

PND PROJECT NO.: 182045 C.A.N. NO.: AECC250

S1.12

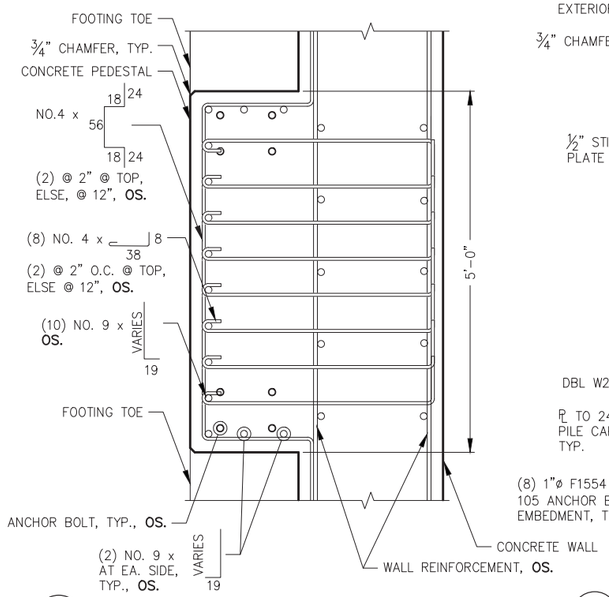

A **S1.10** **TYPICAL PILE CAP SUPPORT PEDESTAL**

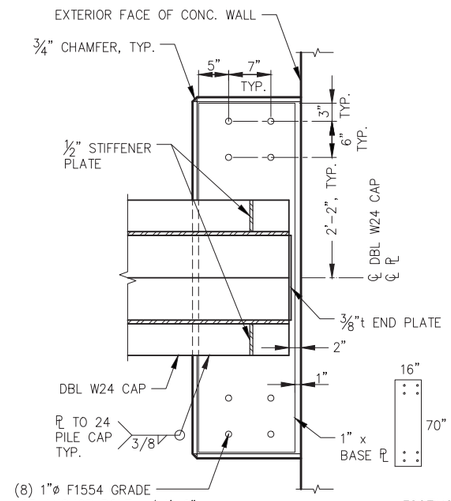

B **S1.09** **S1.10** **PILE CAP BASE PLATE**

NOTE: PILE CAP ANGLE TO ℄ OF PEDESTAL = ±2° FROM PERPENDICULAR TO THE PEDESTAL

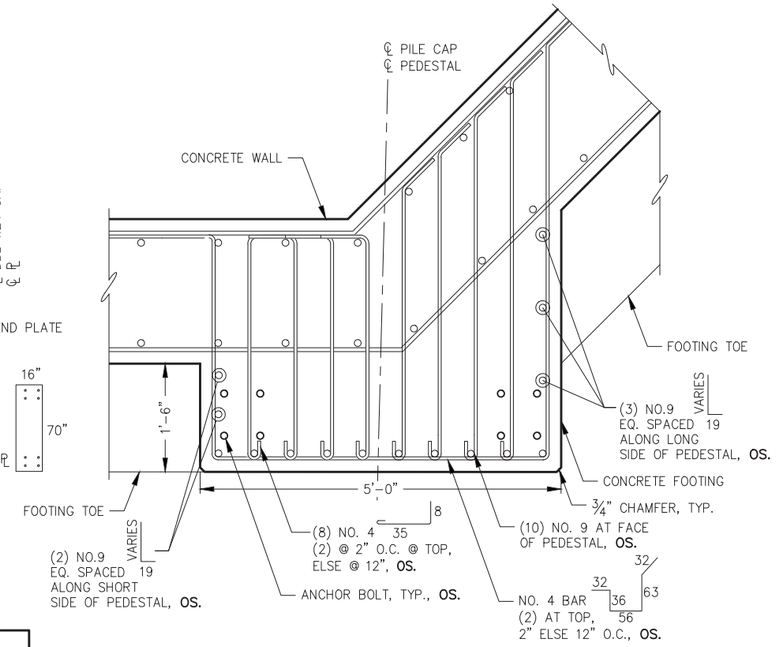

C **S1.09** **PILE CAP SUPPORT PEDESTAL AT WALL TURNING POINT**

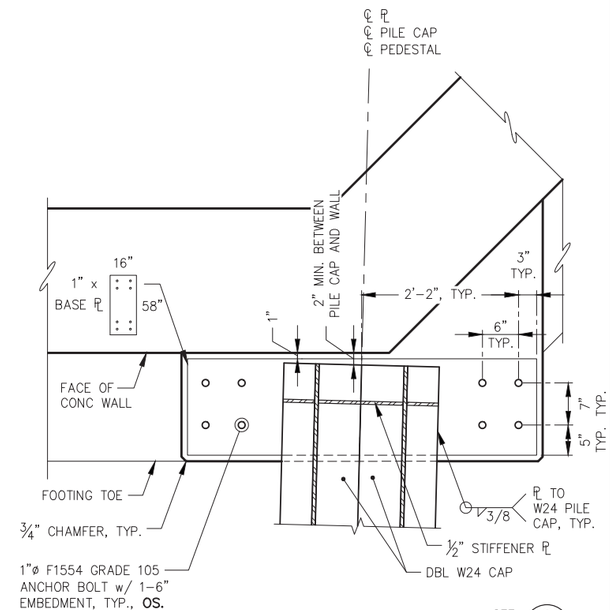

D **S1.09** **PILE CAP BASE PLATE AT WALL TURNING POINT**

SEE C - FOR PEDESTAL REINFORCEMENT

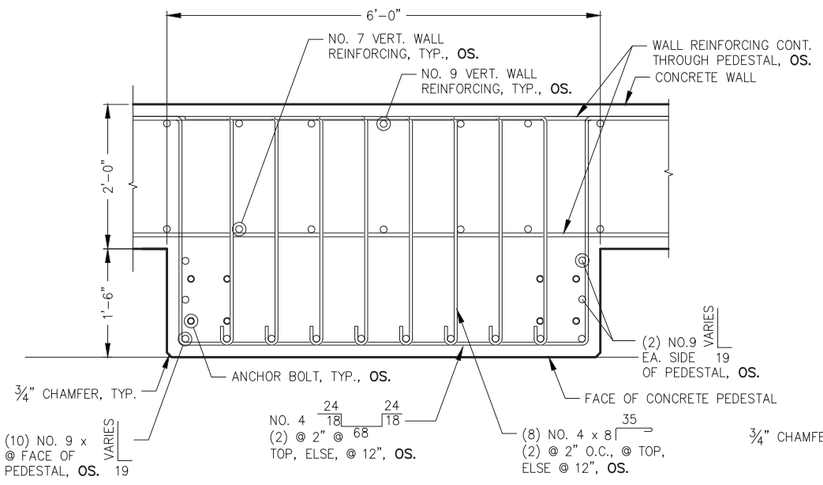

E **S1.10** **PILE CAP SUPPORT PEDESTAL AT ANGLED WALL**

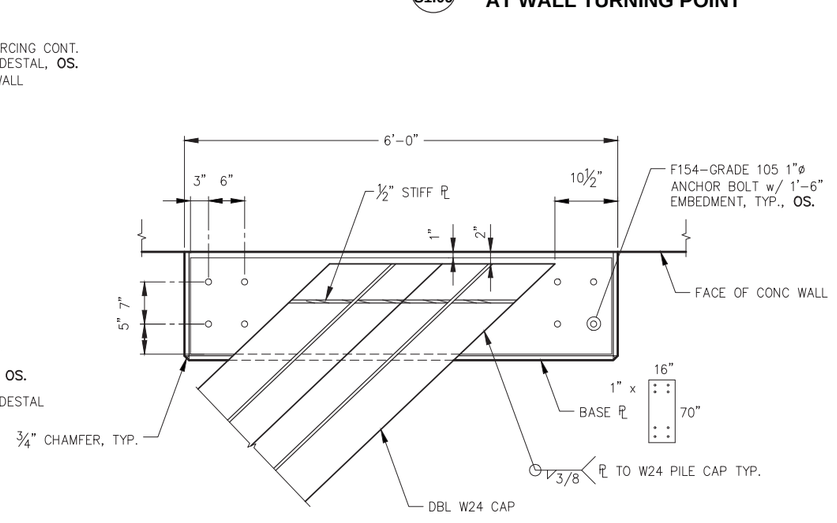

F **S1.09** **S1.10** **PILE CAP BASE PLATE**

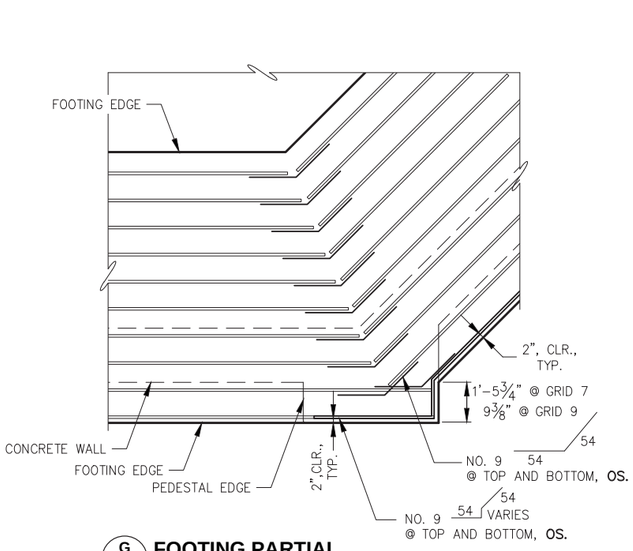

G **S1.09** **FOOTING PARTIAL PLAN AT ANGLE POINT PEDESTALS**

NOTE: OS. INDICATES OWNER SUPPLIED MATERIALS

CITY & BOROUGH OF JUNEAU DOCKS & HARBORS

REVISIONS

REV.	DATE	DESCRIPTION	DWN.	CKD.	APP.

P N D ENGINEERS, INC.
9360 Glacier Highway Ste 100
Juneau, Alaska 99801
Phone: 907-586-2093
Fax: 907-586-2099
www.pndengineers.com

DESIGN: MDS CHECKED: CRS
DRAWN: KLL APPROVED: CRS
SCALE: NTS

STATE OF ALASKA 49TH Charles R. Somerville CE-8845 REGISTERED PROFESSIONAL ENGINEER
DATE: 5/23/2019

DOWNTOWN WATERFRONT IMPROVEMENTS PHASE I
CBJ CONTRACT NO. DH19-014

SHEET TITLE: **CONCRETE RETAINING WALL PEDESTAL DETAILS**

S1.13

PND PROJECT NO.: 182045 C.A.N. NO.: AECC250

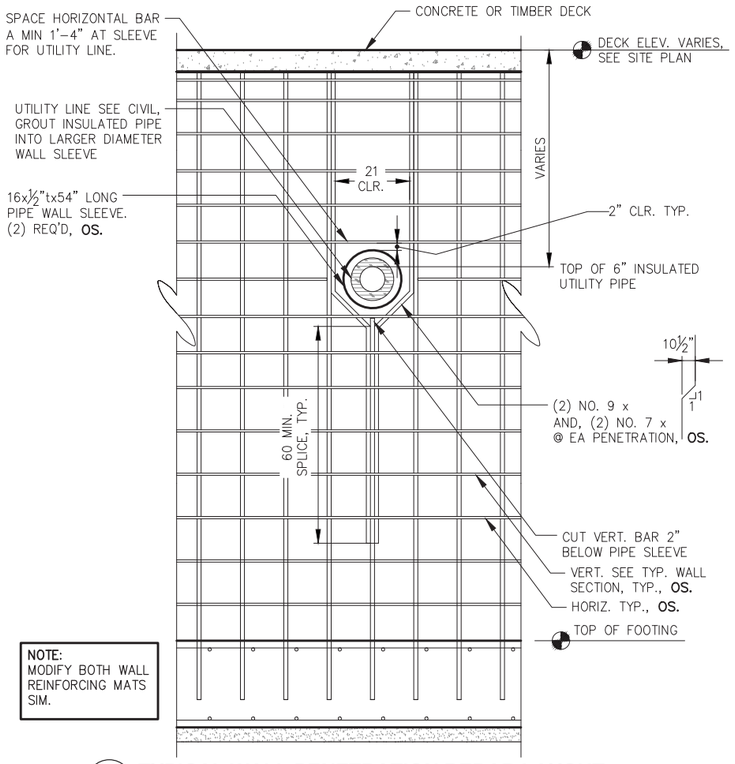

NOTE:
MODIFY BOTH WALL REINFORCING MATS SIM.

A - TYPICAL WALL PENETRATION REBAR LAYOUT FOR PENETRATIONS 16" DIA.

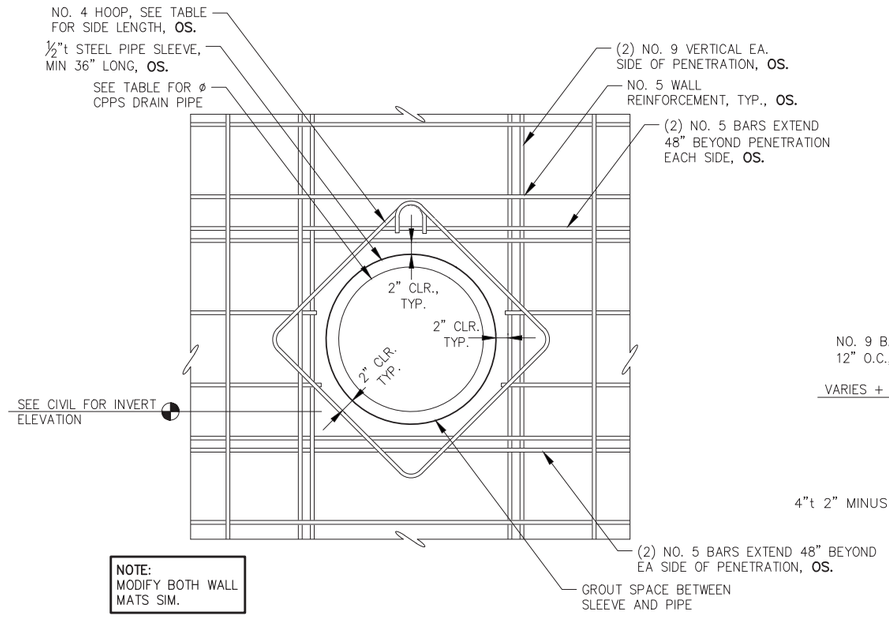

NOTE:
MODIFY BOTH WALL MATS SIM.

B - TYPICAL WALL PENETRATION REBAR LAYOUT FOR PENETRATIONS GREATER THAN 16" DIA

NOTE:

PIPE Ø	PIPE OD	SLEEVE OD	HOOP DIAMETER	QUANTITY REQ'D
24"	28.2"	30"	34"x34"	1
18"	21.8"	24"	28"x28"	1

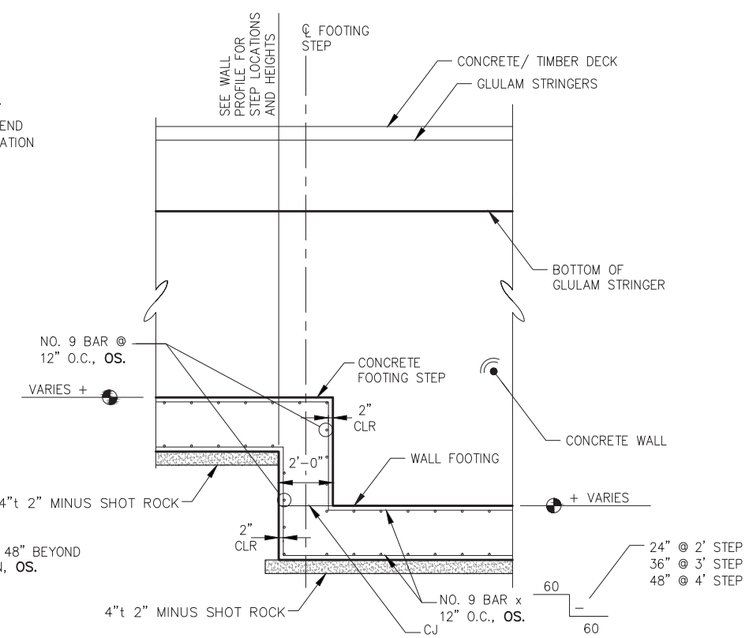

C S1.09 TYPICAL FOOTING STEP

NOTE:
1. COORDINATE w/ ELECTRICAL FOR CONDUIT PENETRATIONS.
2. SLEEVE ELECTRICAL CONDUITS w/ 4"ø PVC SCHEDULE 40 PIPE. ANGLE PIPE THOUGH WALL TO MATCH CONDUIT ANGLE. MAINTAIN A MINIMUM OF 1.5" OF CONCRETE COVER BETWEEN SLEEVE AND REINFORCEMENT.

NOTE: OS. INDICATES OWNER SUPPLIED MATERIALS

CITY & BOROUGH OF JUNEAU DOCKS & HARBORS

REVISIONS

REV.	DATE	DESCRIPTION	DWN.	CKD.	APP.

PND ENGINEERS, INC.
9360 Glacier Highway Ste 100
Juneau, Alaska 99801
Phone: 907-586-2093
Fax: 907-586-2099
www.pndengineers.com

DESIGN: MDS CHECKED: CRS
DRAWN: KLL APPROVED: CRS
SCALE: NTS
DATE: 5/23/2019

STATE OF ALASKA 49TH Charles R. Somerville CE-8845 REGISTERED PROFESSIONAL ENGINEER

DOWNTOWN WATERFRONT IMPROVEMENTS PHASE I
CBJ CONTRACT NO. DH19-014

SHEET TITLE: **CONCRETE RETAINING WALL DETAILS**

PND PROJECT NO.: 182045 C.A.N. NO.: AECC250

S1.14

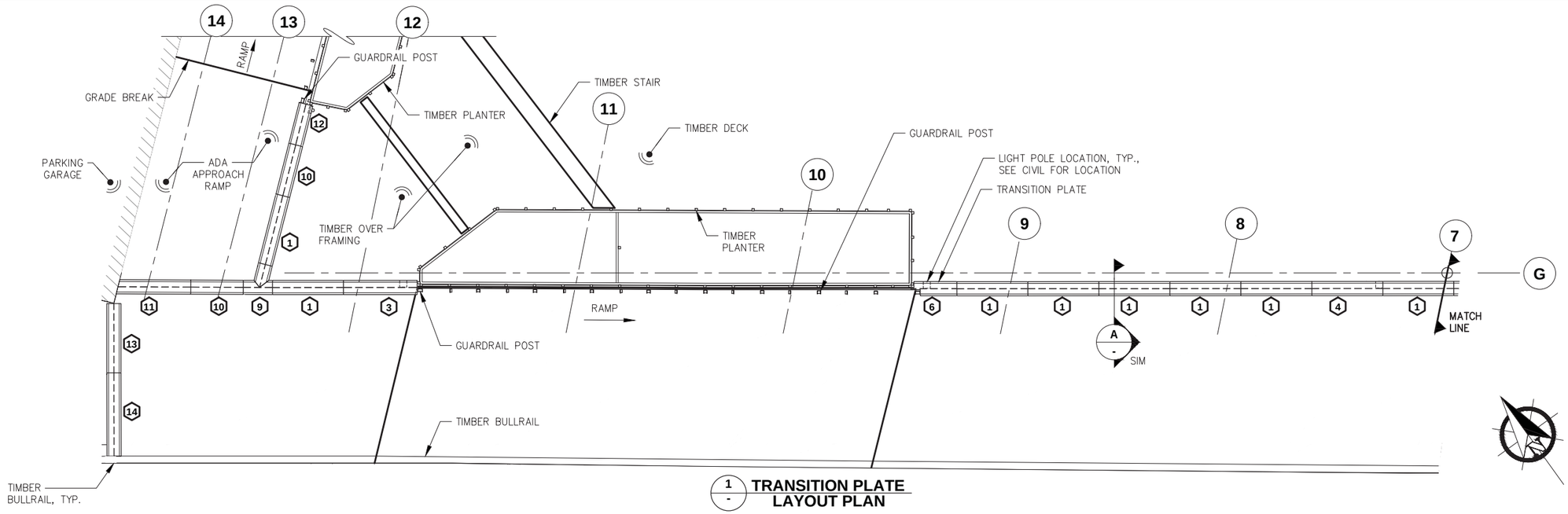

1 / - TRANSITION PLATE LAYOUT PLAN

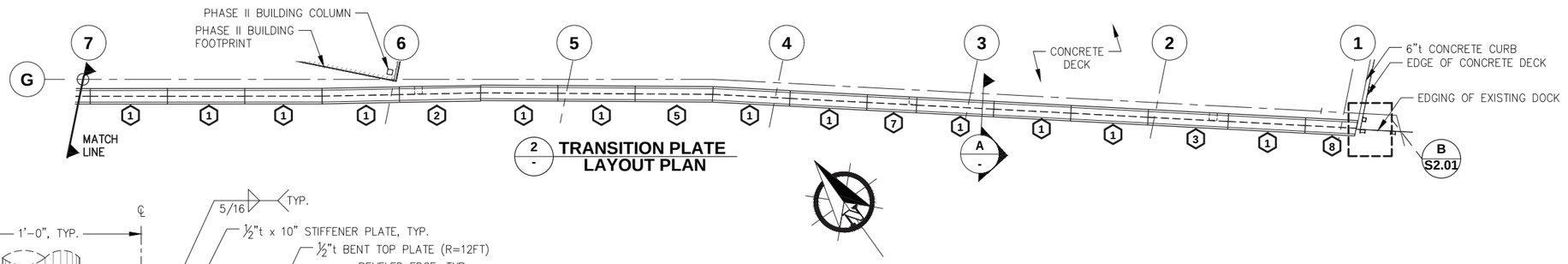

2 / - TRANSITION PLATE LAYOUT PLAN

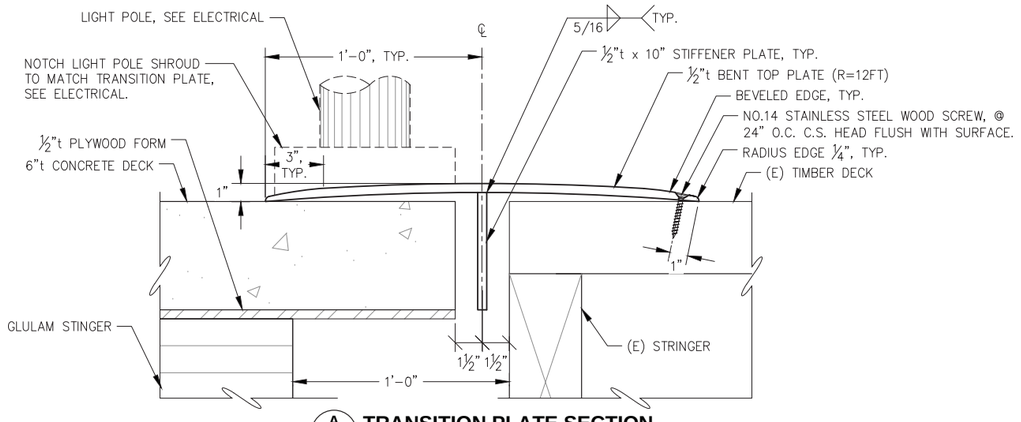

A / - TRANSITION PLATE SECTION
NTS

NOTE:
1. ⬡ # INDICATES PLATE DESIGNATION
2. PLATE EDGES ARE 90° UNLESS NOTED OTHERWISE
3. FIELD MEASURE ALL FINAL NOTCH LOCATIONS PRIOR TO FABRICATION.

REVISIONS

REV.	DATE	DESCRIPTION	DWN.	CKD.	APP.

CITY & BOROUGH OF JUNEAU DOCKS & HARBORS

PND ENGINEERS, INC.
9360 Glacier Highway Ste 100
Juneau, Alaska 99801
Phone: 907-586-2093
Fax: 907-586-2099
www.pndengineers.com

STATE OF ALASKA 49TH
Charles R. Somerville
CE-8845
REGISTERED PROFESSIONAL ENGINEER

DESIGN: MDS CHECKED: CRS
DRAWN: KLL APPROVED: CRS
SCALE: SCALE IN FEET 0 8 16 FT.
DATE: 5/23/2019

DOWNTOWN WATERFRONT IMPROVEMENTS PHASE I
CBJ CONTRACT NO. DH19-014

SHEET TITLE:
TRANSITION PLATE PARTIAL PLAN AND SECTION

PND PROJECT NO.: 182045 C.A.N. NO.: AECC250

S1.15

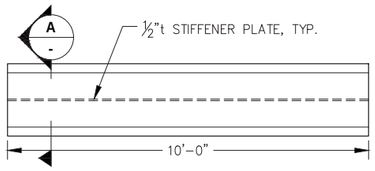

TRANSITION PLATE PLAN TYPE 1
NTS

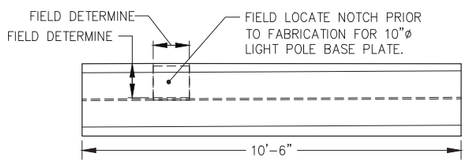

TRANSITION PLATE PLAN TYPE 2
NTS

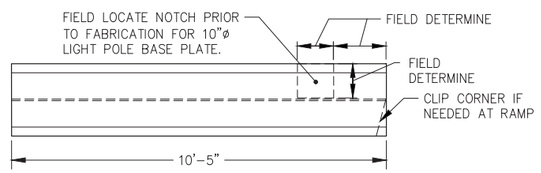

TRANSITION PLATE PLAN TYPE 3
NTS

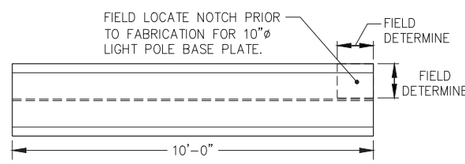

TRANSITION PLATE PLAN TYPE 4
NTS

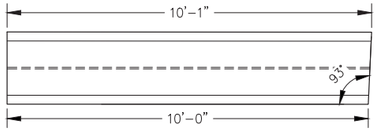

TRANSITION PLATE PLAN TYPE 5
NTS

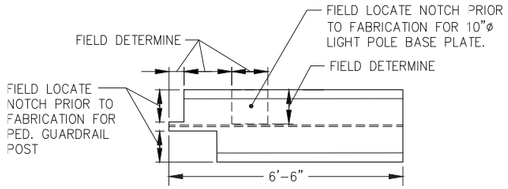

TRANSITION PLATE PLAN TYPE 6
NTS

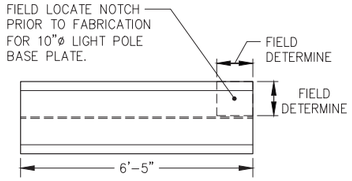

TRANSITION PLATE PLAN TYPE 7
NTS

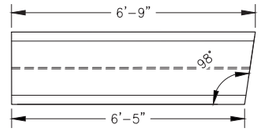

TRANSITION PLATE PLAN TYPE 8
NTS

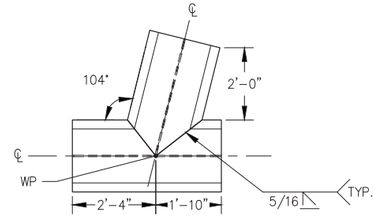

TRANSITION PLATE PLAN TYPE 9
NTS

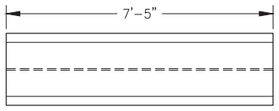

TRANSITION PLATE PLAN TYPE 10

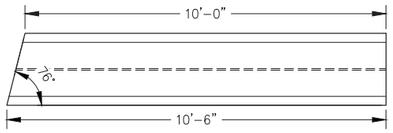

TRANSITION PLATE PLAN TYPE 11
NTS

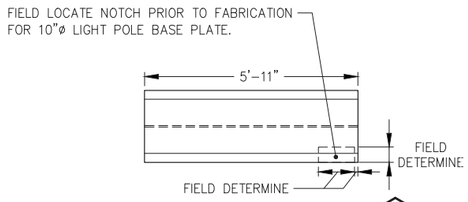

TRANSITION PLATE PLAN TYPE 12
NTS

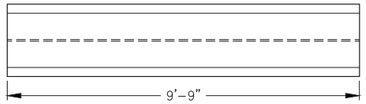

TRANSITION PLATE PLAN TYPE 13
NTS

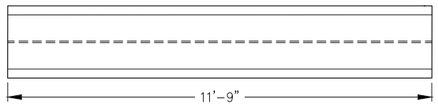

TRANSITION PLATE PLAN TYPE 14
NTS

REVISIONS

REV.	DATE	DESCRIPTION	DWN.	CKD.	APP.

P N D ENGINEERS, INC.
9360 Glacier Highway Ste 100
Juneau, Alaska 99801
Phone: 907-586-2093
Fax: 907-586-2099
www.pndengineers.com

DESIGN: MDS CHECKED: CRS
DRAWN: KLL APPROVED: CRS
SCALE: NTS
DATE: 5/23/2019

STATE OF ALASKA 49TH Charles R. Somerville CE-8845 REGISTERED PROFESSIONAL ENGINEER

DOWNTOWN WATERFRONT IMPROVEMENTS PHASE I
CBJ CONTRACT NO. DH19-014

SHEET TITLE:
TRANSITION PLATE LAYOUT

PND PROJECT NO.: 182045 C.A.N. NO.: AECC250

S1.16

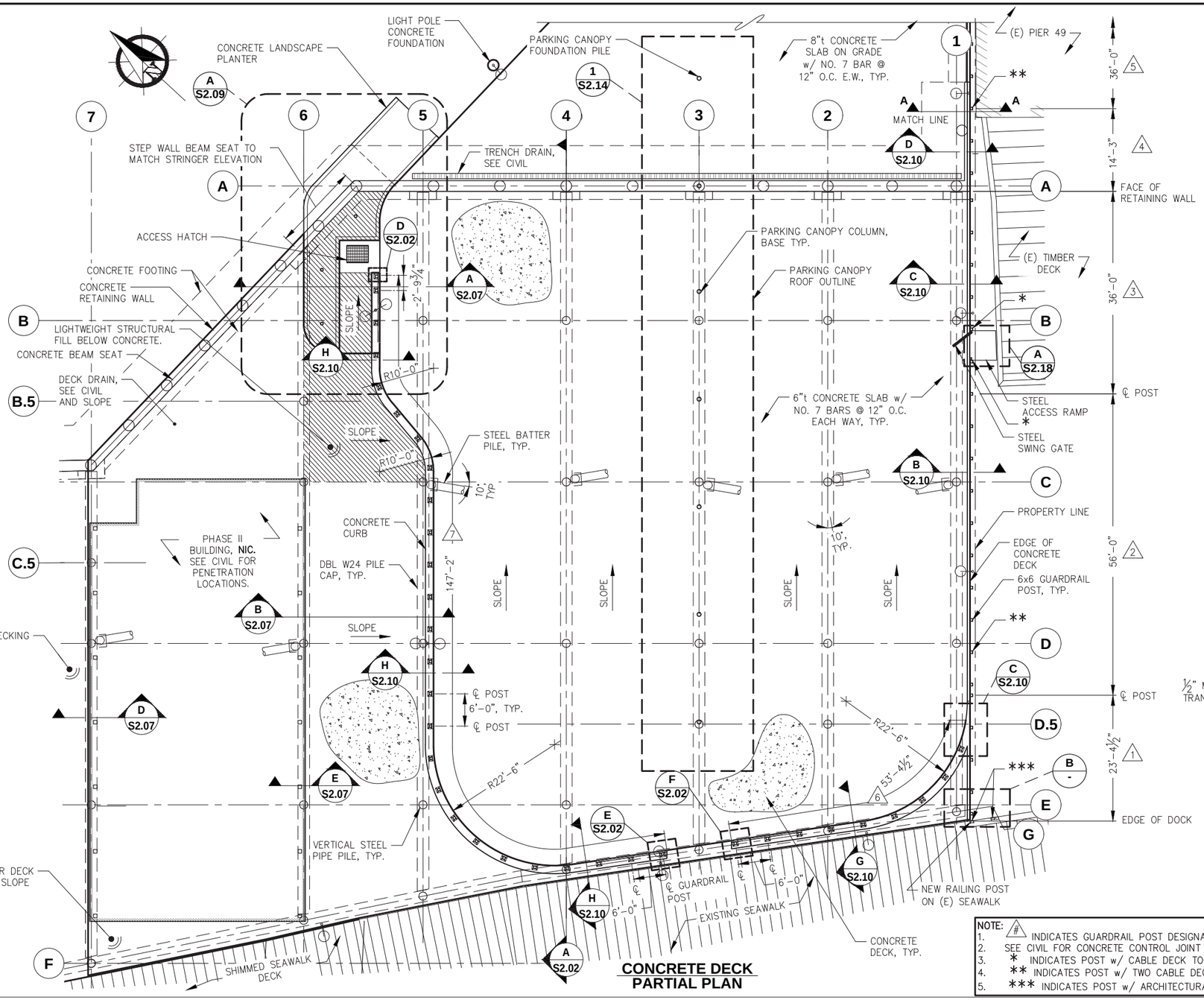

CONCRETE DECK PARTIAL PLAN

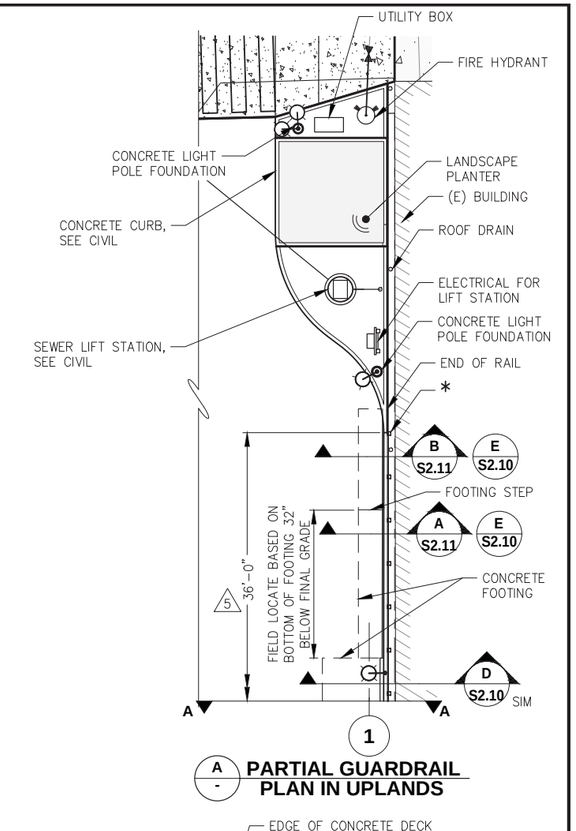

PARTIAL GUARDRAIL PLAN IN UPLANDS

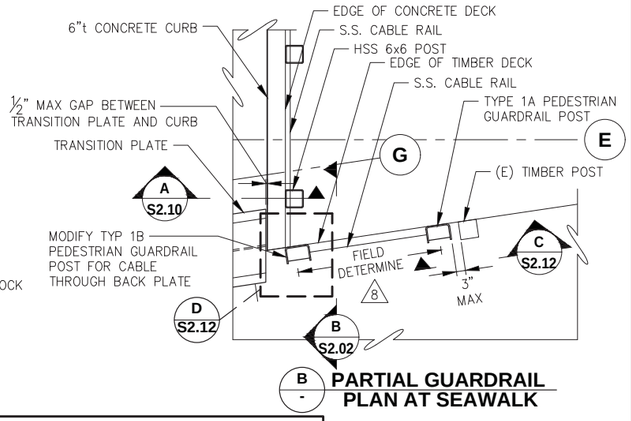

PARTIAL GUARDRAIL PLAN AT SEAWALK

NOTE:
1. # INDICATES GUARDRAIL POST DESIGNATIONS
2. SEE CIVIL FOR CONCRETE CONTROL JOINT PATTERN AND GRADES
3. * INDICATES POST w/ CABLE DECK TOGGLE TERMINATIONS.
4. ** INDICATES POST w/ TWO CABLE DECK TOGGLE TERMINATIONS OR TURNBUCKLES
5. *** INDICATES POST w/ ARCHITECTURAL TERMINATIONS/TURNBUCKLES.

REVISIONS

REV.	DATE	DESCRIPTION	DWN.	CKD.	APP.

PND ENGINEERS, INC.
9360 Glacier Highway Ste 100
Juneau, Alaska 99801
Phone: 907-586-2093
Fax: 907-586-2099
www.pndengineers.com

DESIGN: MDS CHECKED: CRS
DRAWN: KLL APPROVED: CRS
SCALE: SCALE IN FEET 0 10 20 FT.

STATE OF ALASKA 49TH Charles R. Somerville CE-8845 REGISTERED PROFESSIONAL ENGINEER
DATE: 5/23/2019

DOWNTOWN WATERFRONT IMPROVEMENTS PHASE I
CBJ CONTRACT NO. DH19-014

SHEET TITLE: **CONCRETE DECK PARTIAL PLAN**

PND PROJECT NO.: 182045 C.A.N. NO.: AECC250

S2.01

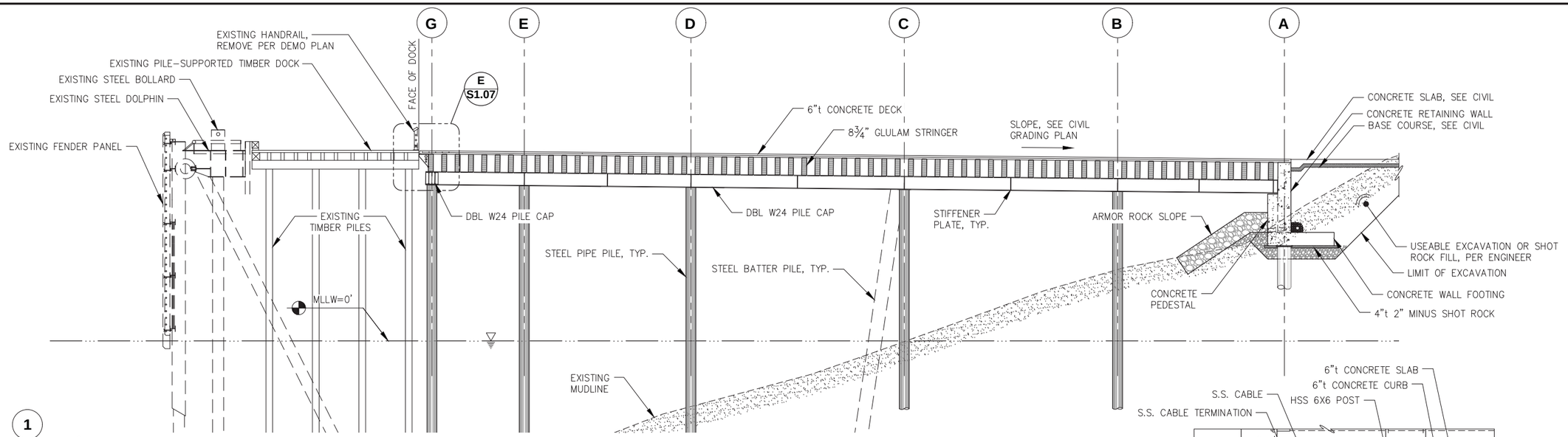

A S2.01 CONCRETE DECK ELEVATION

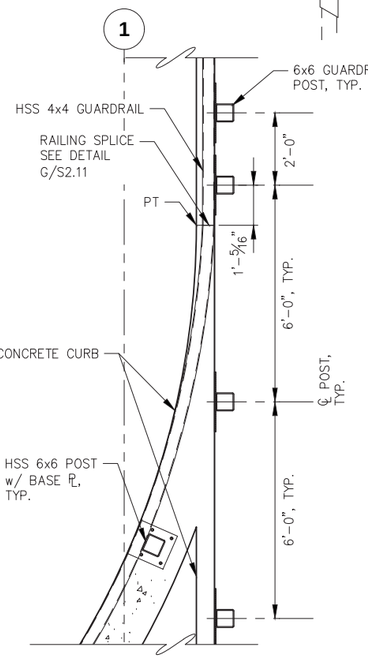

C S2.01 TYPICAL END OF CURB GUARDRAIL POST DETAIL

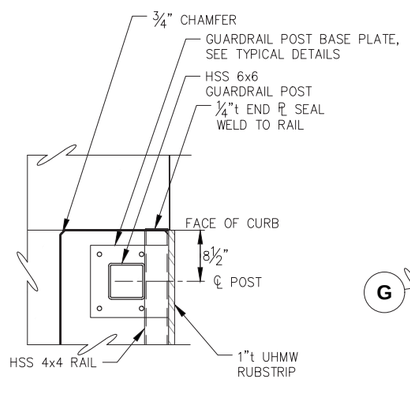

D S2.01 TYPICAL END OF CURB GUARDRAIL POST DETAIL

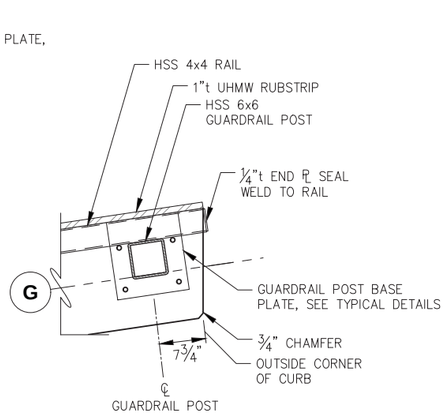

E S2.01 TYPICAL END OF CURB GUARDRAIL POST DETAIL

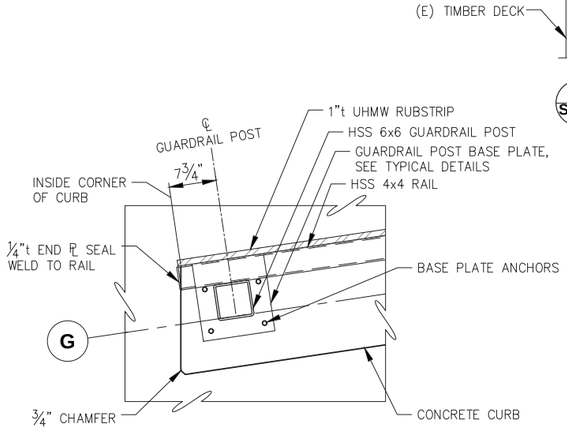

F S2.01 TYPICAL END OF CURB GUARDRAIL POST DETAIL

NOTE:
1. RUBSTRIP NOT SHOWN FOR CLARITY

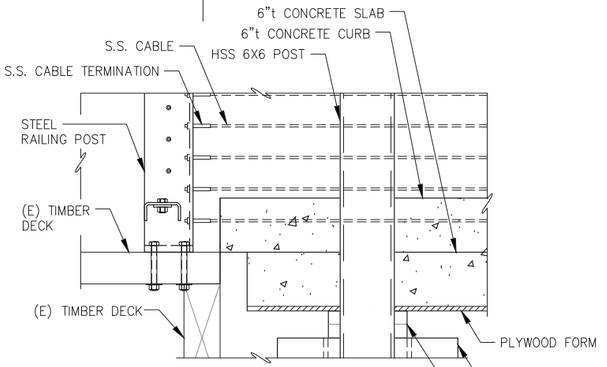

B S2.01 CURB AT EXISTING SEAWALK

REVISIONS

REV.	DATE	DESCRIPTION	DWN.	CKD.	APP.

CITY & BOROUGH OF JUNEAU DOCKS & HARBORS

PND ENGINEERS, INC.
9360 Glacier Highway Ste 100
Juneau, Alaska 99801
Phone: 907-586-2093
Fax: 907-586-2099
www.pndengineers.com

DESIGN: MDS CHECKED: CRS
DRAWN: KLL APPROVED: CRS
SCALE: SCALE IN FEET 0 10 20 FT.

STATE OF ALASKA 49TH Charles R. Somerville CE-8845 REGISTERED PROFESSIONAL ENGINEER
DATE: 5/23/2019

DOWNTOWN WATERFRONT IMPROVEMENTS PHASE I
CBJ CONTRACT NO. DH19-014

SHEET TITLE: **CONCRETE DECK ELEVATION AND SECTION**

S2.02

PND PROJECT NO.: 182045 C.A.N. NO.: AECC250

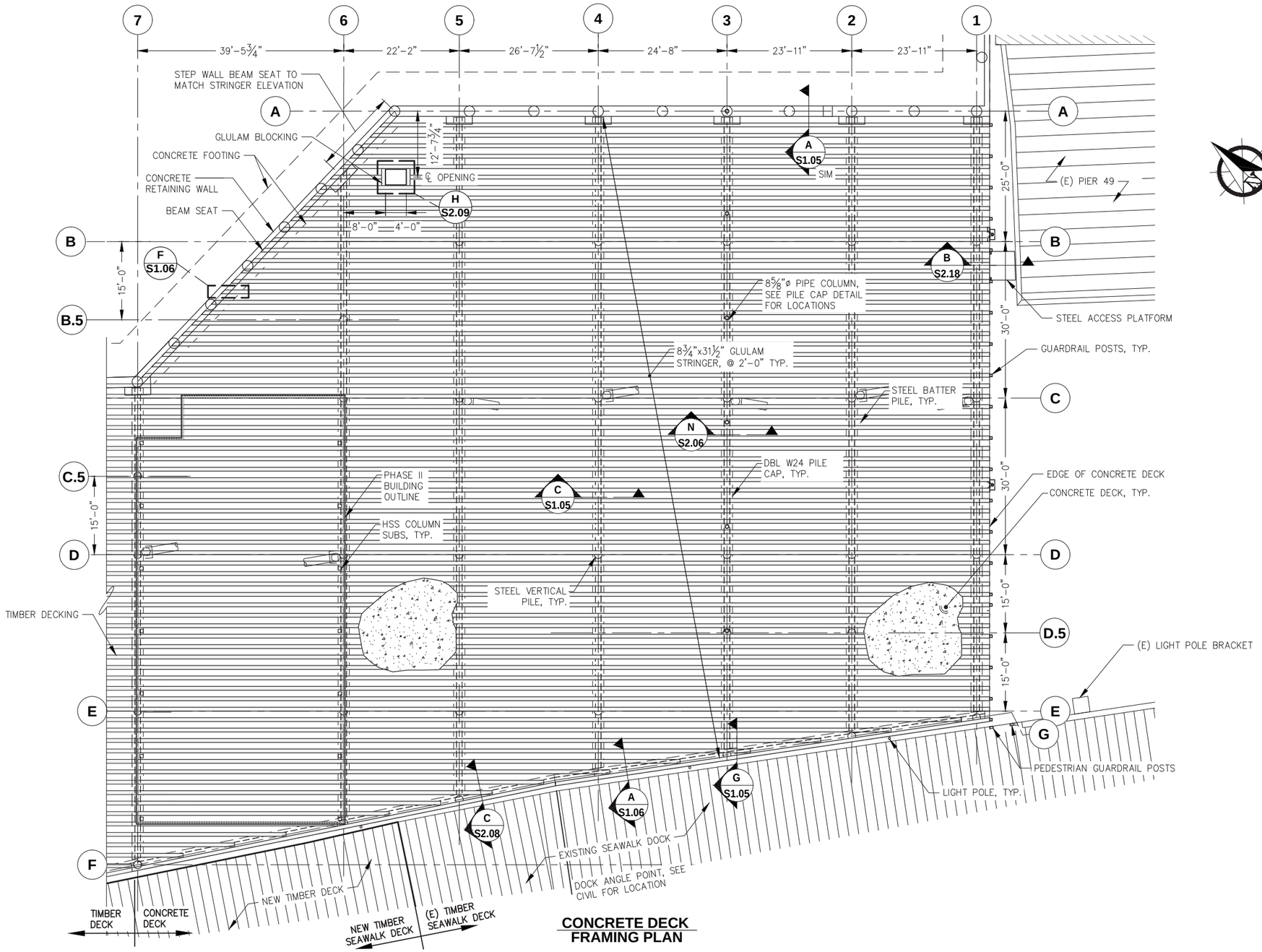

CONCRETE DECK FRAMING PLAN

CITY & BOROUGH OF JUNEAU — DOCKS & HARBORS

REVISIONS

REV.	DATE	DESCRIPTION	DWN.	CKD.	APP.

PND ENGINEERS, INC.
9360 Glacier Highway Ste 100
Juneau, Alaska 99801
Phone: 907-586-2093
Fax: 907-586-2099
www.pndengineers.com

DESIGN: MDS CHECKED: CRS
DRAWN: KLL APPROVED: CRS
SCALE: SCALE IN FEET 0 10 20 FT.

STATE OF ALASKA 49TH — Charles R. Somerville CE-8845 — REGISTERED PROFESSIONAL ENGINEER
DATE: 5/23/2019

DOWNTOWN WATERFRONT IMPROVEMENTS PHASE I
CBJ CONTRACT NO. DH19-014

SHEET TITLE: **CONCRETE DECK FRAMING PLAN**

S2.03

PND PROJECT NO.: 182045 C.A.N. NO.: AECC250

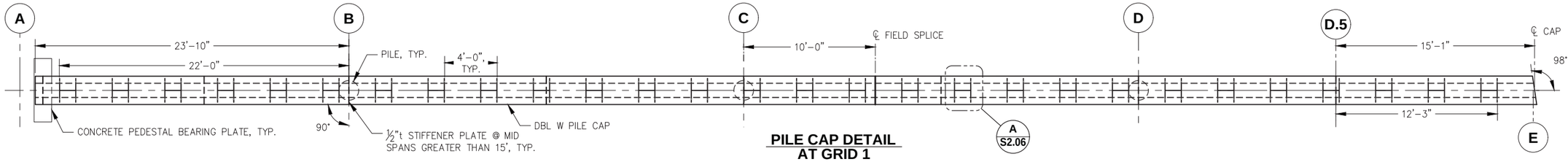

PILE CAP DETAIL AT GRID 1

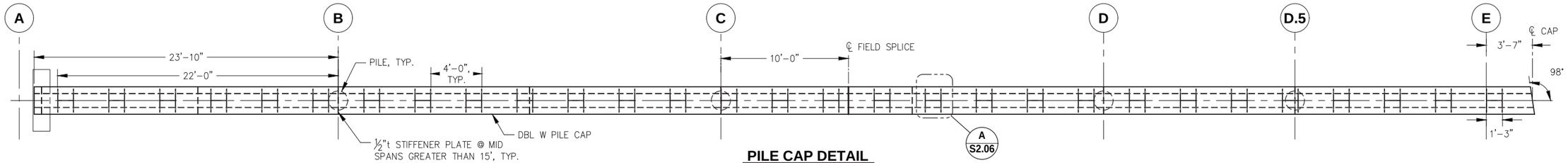

PILE CAP DETAIL AT GRID 2

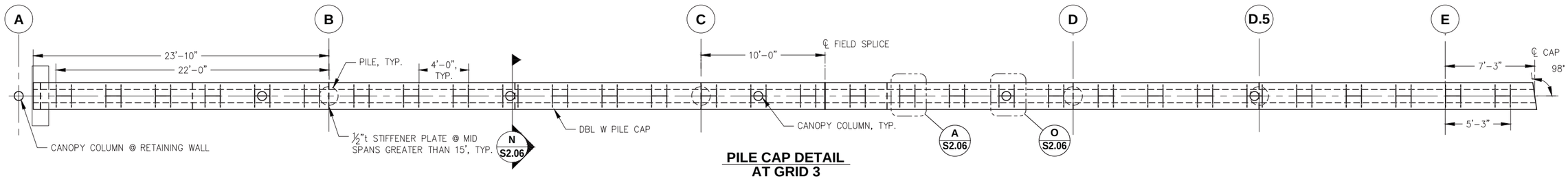

PILE CAP DETAIL AT GRID 3

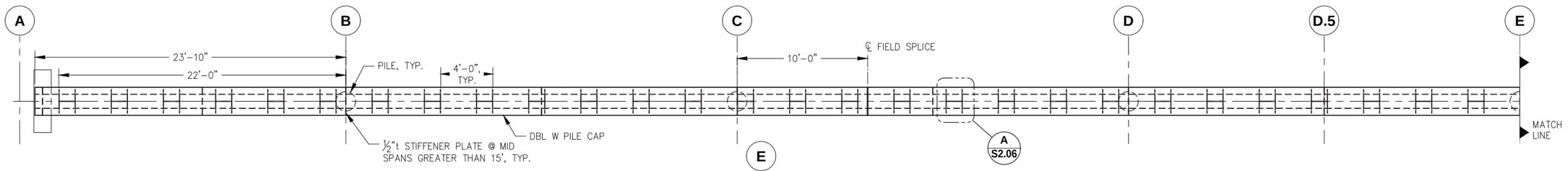

PILE CAP DETAIL AT GRID 4

NOTE:
1. SHOP SPLICE AS REQUIRED FOR SECTIONS TO FIT IN GALVANIZING TANKS.
2. ALL PLATE DIMENSIONS ARE TO THE OUTSIDE OF SIDE PLATE, UNLESS NOTED OTHERWISE
3. ALL PILE CAPS ARE DBL W24x131, UNLESS OTHERWISE NOTED
4. ONE STIFFENER PLATE SHALL BE LOCATED AT ℄ EACH PILE, AND ONE PLATE AT MIDSPAN BETWEEN PILES AT PILE SPACING GREATER THAN 15' O.C.

CITY & BOROUGH OF JUNEAU DOCKS & HARBORS

REVISIONS

REV.	DATE	DESCRIPTION	DWN.	CKD.	APP.

PND ENGINEERS, INC.
9360 Glacier Highway Ste 100
Juneau, Alaska 99801
Phone: 907-586-2093
Fax: 907-586-2099
www.pndengineers.com

DESIGN: MDS CHECKED: CRS
DRAWN: KLL APPROVED: CRS
SCALE: SCALE IN FEET 0 10 20 FT.

STATE OF ALASKA 49TH
Charles R. Somerville
CE-8845
REGISTERED PROFESSIONAL ENGINEER
DATE: 5/23/2019

DOWNTOWN WATERFRONT IMPROVEMENTS PHASE I
CBJ CONTRACT NO. DH19-014

SHEET TITLE: **PILE CAP PLAN**

PND PROJECT NO.: 182045 C.A.N. NO.: AECC250

S2.04

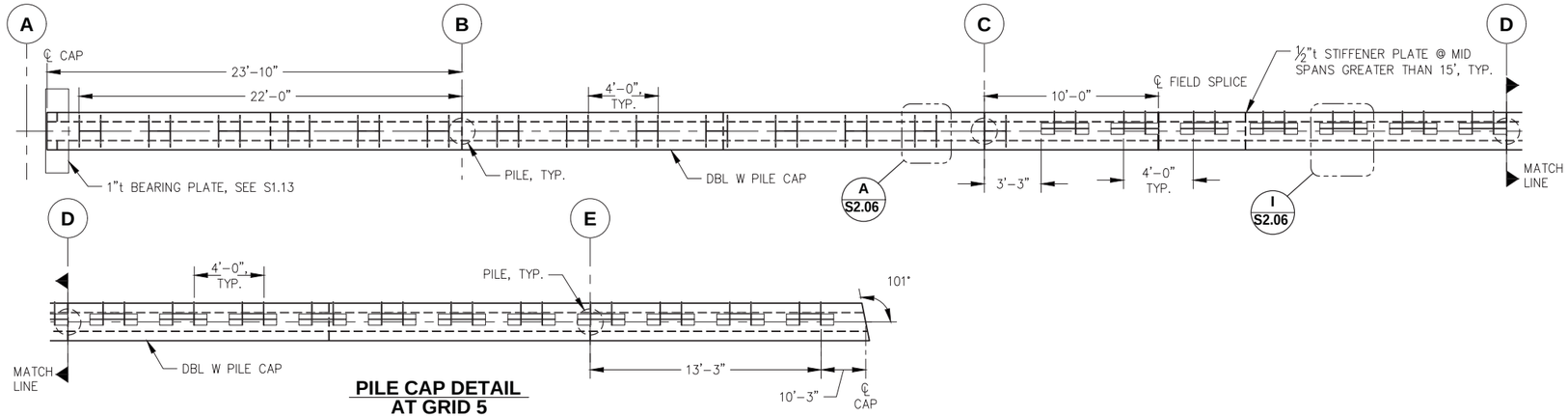

PILE CAP DETAIL AT GRID 5

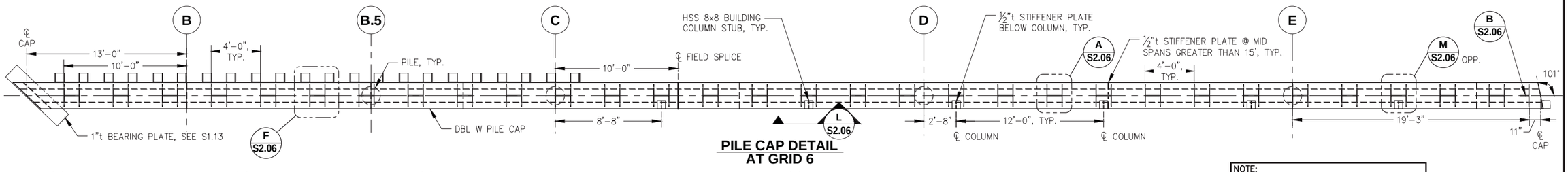

PILE CAP DETAIL AT GRID 6

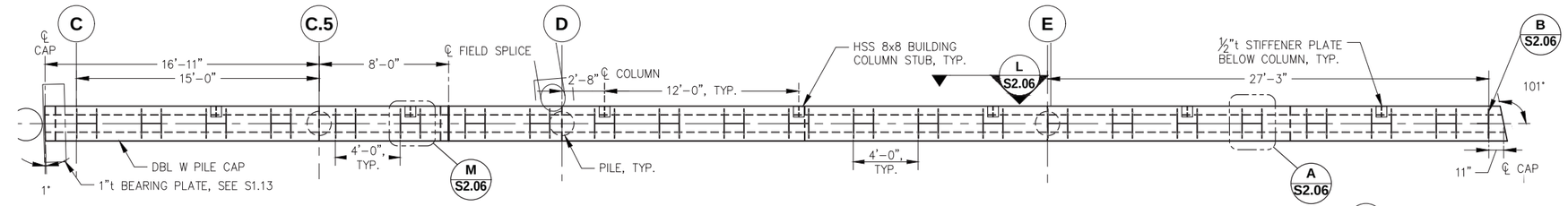

PILE CAP DETAIL AT GRID 7

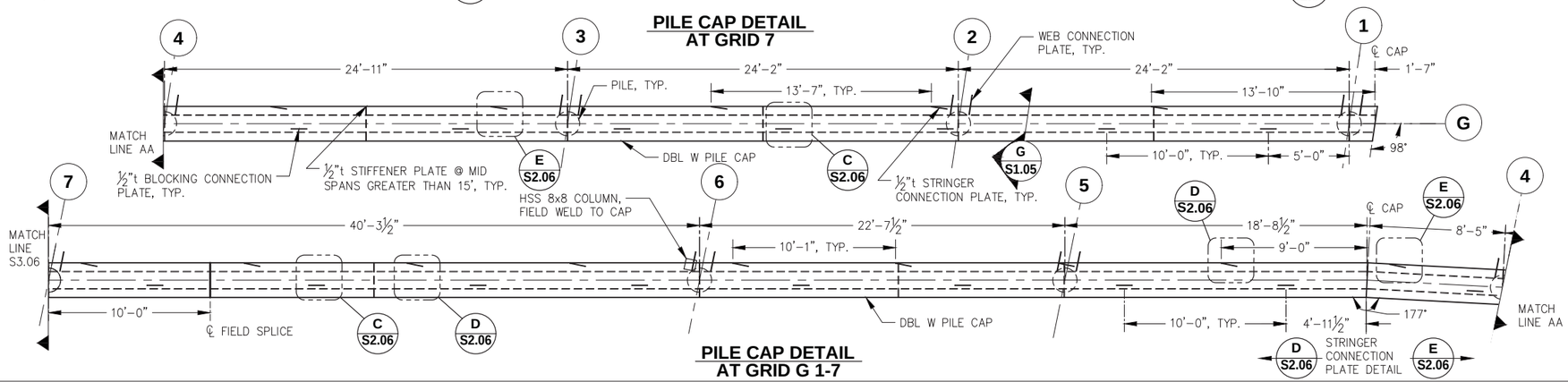

NOTE:
1. GRID 6 AND 7 PILE CAPS SHALL BE ALIGNED SO THE ℄ OF EACH COLUMN POSTS SHALL BE ALIGNED HORIZONTALLY WITHIN ± 1/16"

NOTE:
1. SHOP SPLICE AS REQUIRED FOR SECTIONS TO FIT IN GALVANIZING TANKS.
2. ALL PLATE DIMENSIONS ARE TO THE OUTSIDE OF SIDE PLATE, UNLESS NOTED OTHERWISE
3. ALL PILE CAPS ARE DBL W24x131, UNLESS OTHERWISE NOTED
4. ONE STIFFENER PLATE SHALL BE LOCATED AT ℄ EACH PILE, AND ONE PLATE AT MIDSPAN BETWEEN PILES AT PILE SPACING GREATER THAN 15' O.C.

CITY & BOROUGH OF JUNEAU DOCKS & HARBORS

REVISIONS

REV.	DATE	DESCRIPTION	DWN.	CKD.	APP.

PND ENGINEERS, INC.
9360 Glacier Highway Ste 100
Juneau, Alaska 99801
Phone: 907-586-2093
Fax: 907-586-2099
www.pndengineers.com

DESIGN: MDS CHECKED: CRS
DRAWN: KLL APPROVED: CRS
SCALE: SCALE IN FEET 0 4 8 FT.

STATE OF ALASKA 49 TH Charles R. Somerville CE-8845 REGISTERED PROFESSIONAL ENGINEER
DATE: 5/23/2019

DOWNTOWN WATERFRONT IMPROVEMENTS PHASE I
CBJ CONTRACT NO. DH19-014

SHEET TITLE: **PILE CAP PLAN**

S2.05

PND PROJECT NO.: 182045 C.A.N. NO.: AECC250

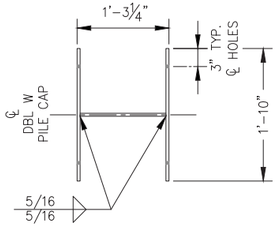

A STRINGER CONNECTION WELDMENT

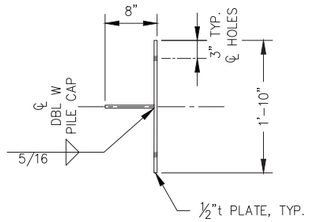

B STRINGER CONNECTION WELDMENT

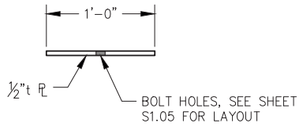

C STRINGER CONNECTION WELDMENT

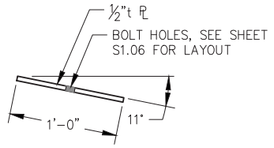

D TYPICAL ANGLED STRINGER CONNECTION PLATE

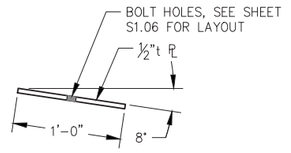

E TYPICAL ANGLED STRINGER CONNECTION PLATE

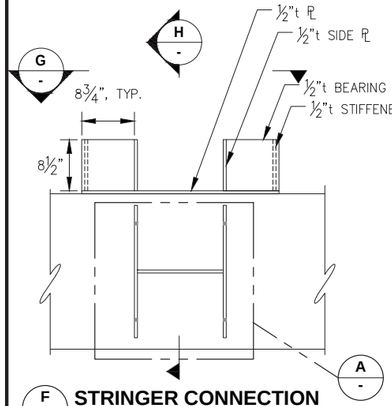

F STRINGER CONNECTION WELDMENT

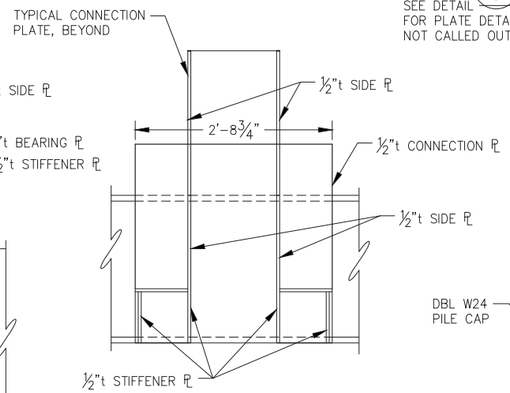

G TYPE F ELEVATION

NOTE: BOLT HOLES NOT SHOWN FOR CLARITY

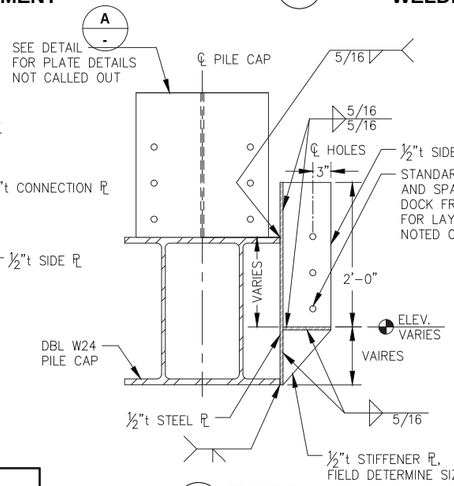

H TYPE F SECTION

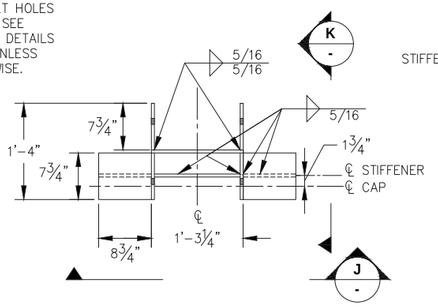

I STRINGER CONNECTION WELDMENT

NOTE: ALL ℄ ARE ½"t STEEL

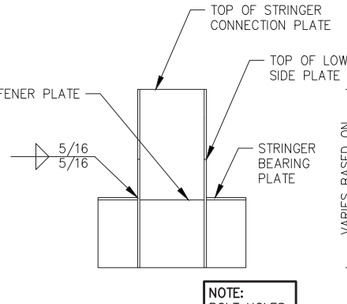

NOTE: BOLT HOLES NOT SHOWN FOR CLARITY

J STRINGER CONNECTION ELEVATION

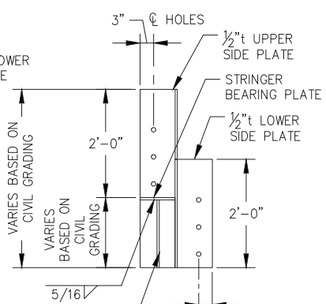

K STRINGER CONNECTION SECTION

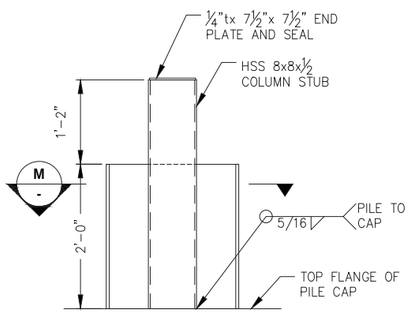

NOTE: BOLT HOLES NOT SHOWN FOR CLARITY

L TYPICAL BUILDING COLUMN STUB DETAIL

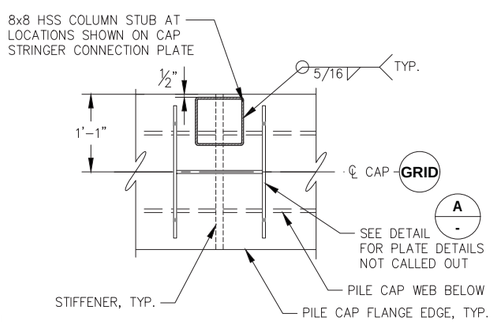

M TYPICAL BUILDING COLUMN STUB CONNECTION DETAIL

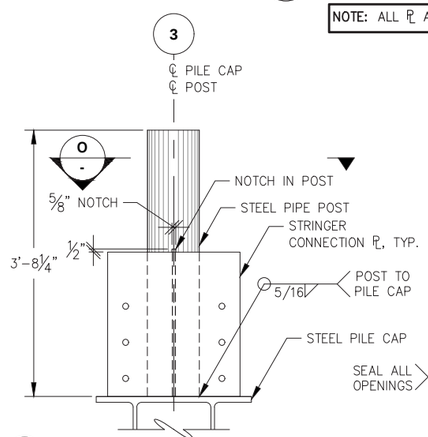

N TYPICAL PARKING CANOPY CONNECTION DETAIL

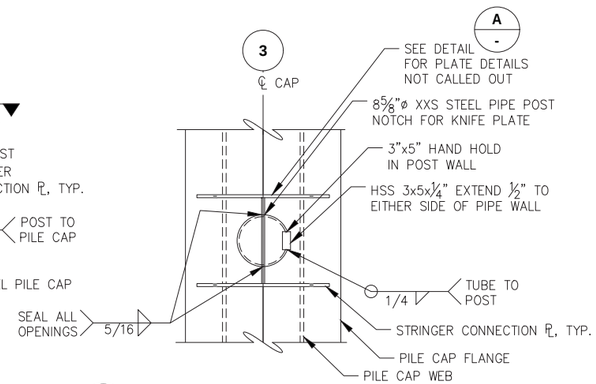

O TYPICAL PRE-ENGINEERED CANOPY CONNECTION DETAIL

REVISIONS

REV.	DATE	DESCRIPTION	DWN.	CKD.	APP.

P N D ENGINEERS, INC.
9360 Glacier Highway Ste 100
Juneau, Alaska 99801
Phone: 907-586-2093
Fax: 907-586-2099
www.pndengineers.com

DESIGN: MDS CHECKED: CRS
DRAWN: KLL APPROVED: CRS
SCALE: SCALE IN FEET 0 10 20 FT.
DATE: 5/23/2019

STATE OF ALASKA 49TH Charles R. Somerville CE-8845 REGISTERED PROFESSIONAL ENGINEER

DOWNTOWN WATERFRONT IMPROVEMENTS PHASE I
CBJ CONTRACT NO. DH19-014

SHEET TITLE: **PILE CAP PLAN**

S2.06

PND PROJECT NO.: 182045 C.A.N. NO.: AECC250

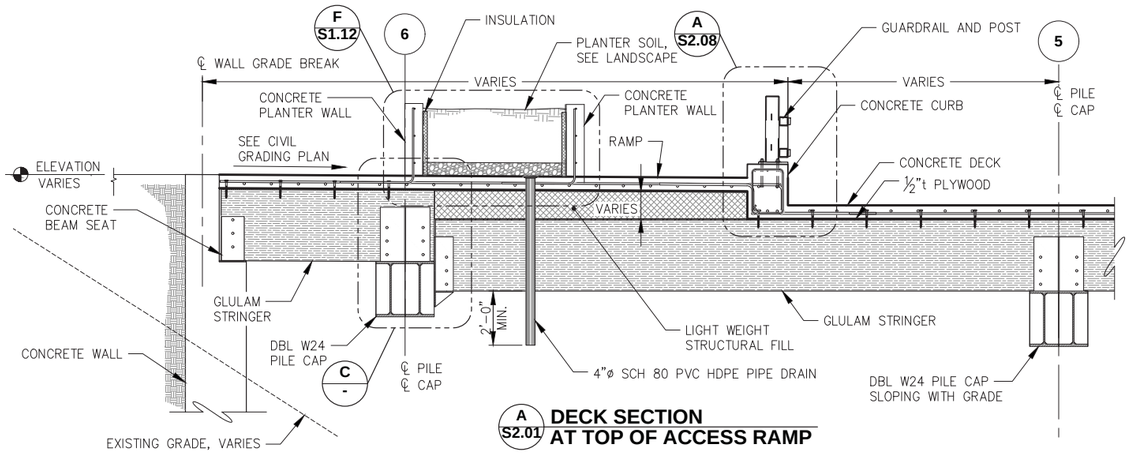

A S2.01 **DECK SECTION AT TOP OF ACCESS RAMP**

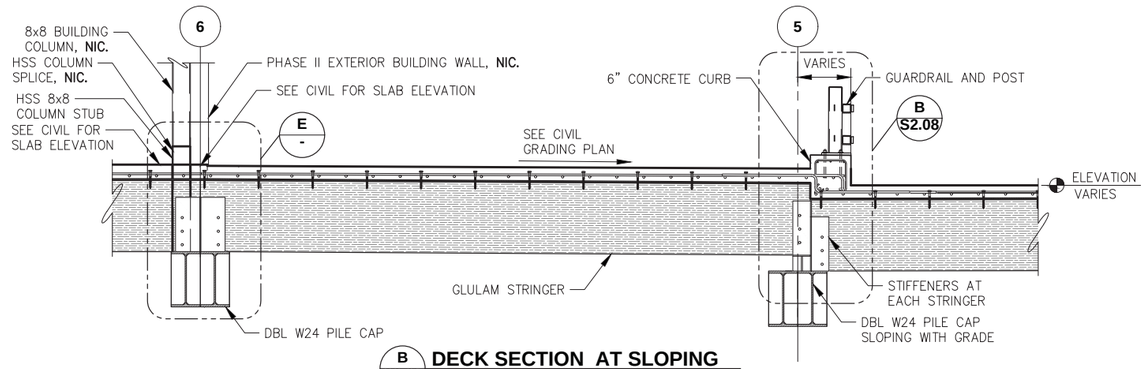

B S2.01 **DECK SECTION AT SLOPING PILE CAP TRANISION**

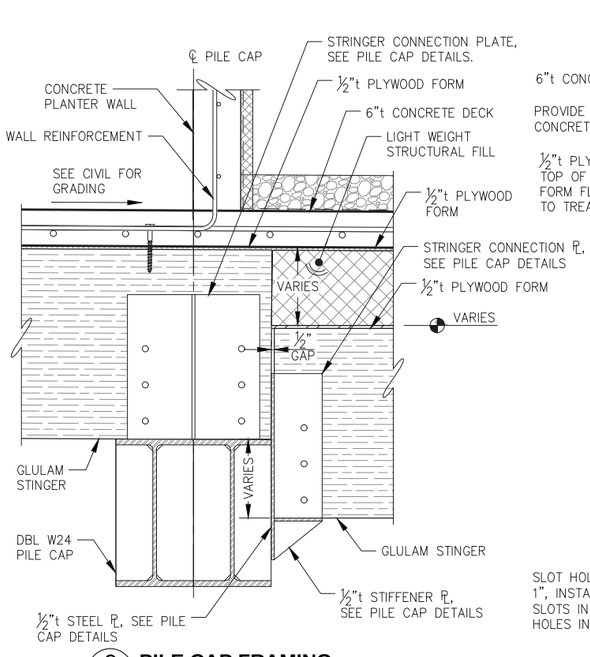

C - **PILE CAP FRAMING DETAIL**

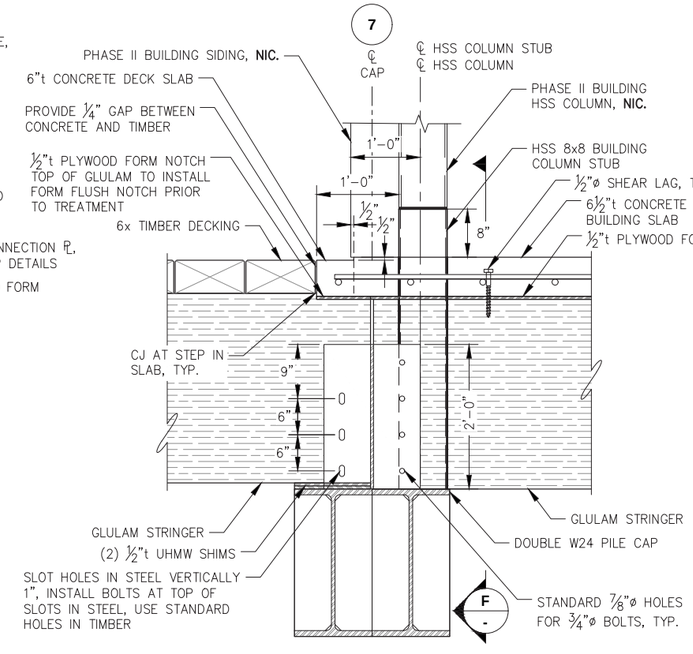

D S2.01 **TIMBER TO CONCRETE JOINT DETAIL AT PHASE II BUILDING EXTERIOR**

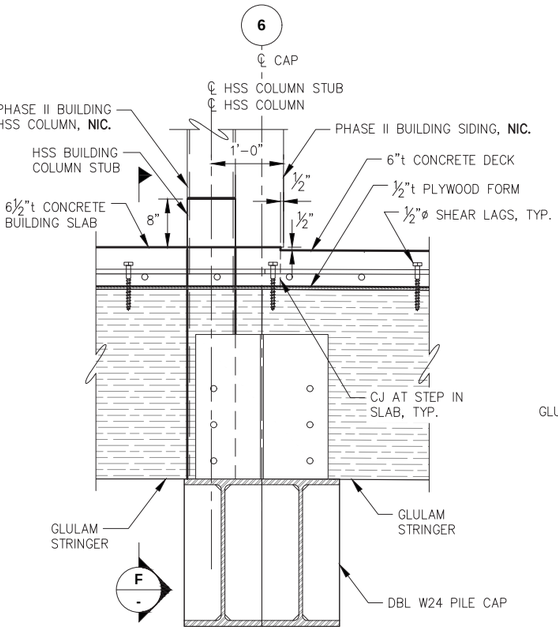

E - **DECK SECTION AT PHASE II BUILDING EXTERIOR**

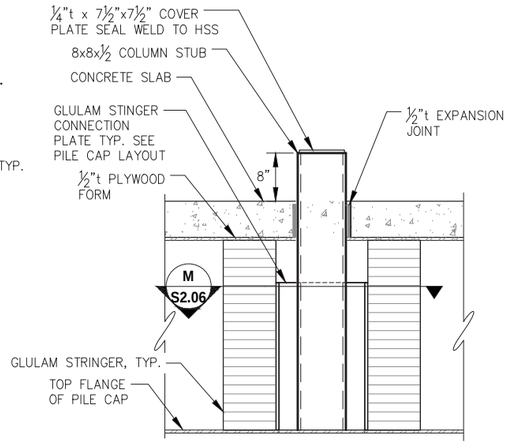

F - **TYPICAL BUILDING COLUMN DETAIL**

REVISIONS

REV.	DATE	DESCRIPTION	DWN.	CKD.	APP.

PND ENGINEERS, INC.
9360 Glacier Highway Ste 100
Juneau, Alaska 99801
Phone: 907-586-2093
Fax: 907-586-2099
www.pndengineers.com

DESIGN: MDS CHECKED: CRS
DRAWN: KLL APPROVED: CRS
SCALE: NTS
DATE: 5/23/2019

STATE OF ALASKA 49TH — Charles R. Somerville CE-8845 — REGISTERED PROFESSIONAL ENGINEER

DOWNTOWN WATERFRONT IMPROVEMENTS PHASE I
CBJ CONTRACT NO. DH19-014

SHEET TITLE: **CONCRETE DECK SECTIONS**

S2.07

PND PROJECT NO.: 182045 C.A.N. NO.: AECC250

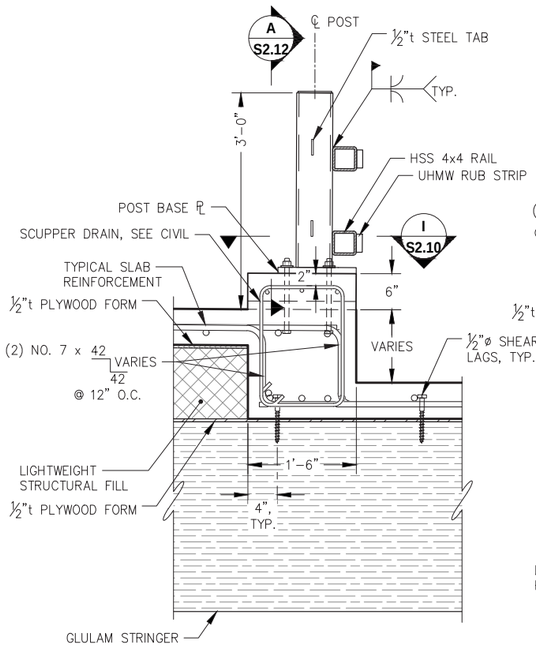

A S2.07 **DECK SECTION AT FACE MOUNTED VEHICLE RAIL**

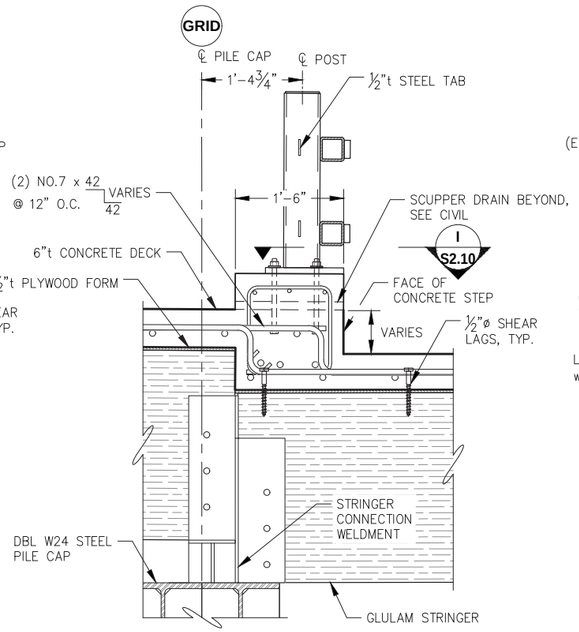

B S2.07 **DECK SECTION AT PILE CAP**

NOTE: SEE DETAIL A/- FOR DETAILS NOT CALLED OUT

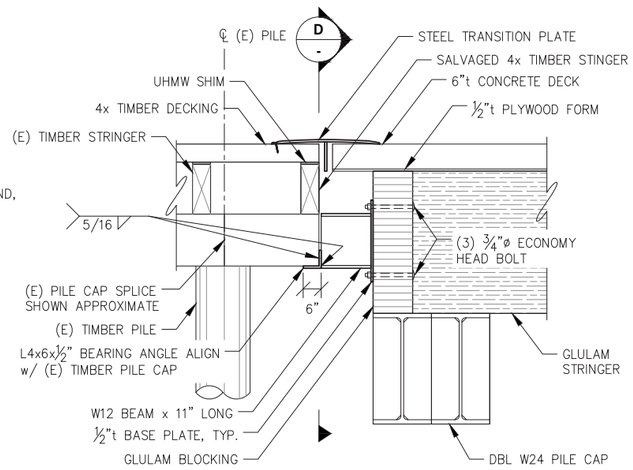

C S2.03 **EXISTING CAP SUPPORT BRACKET DETAIL**

NOTE:
1. REQUIRED AT (3) (E) PILE CAPS THAT ARE CUT OFF WHEN DEMOLISHING APPROACH DOCK.
2. BLOCKING AND STRINGER CONNECTION PLATES AND BOLTS NOT SHOWN FOR CLARITY.

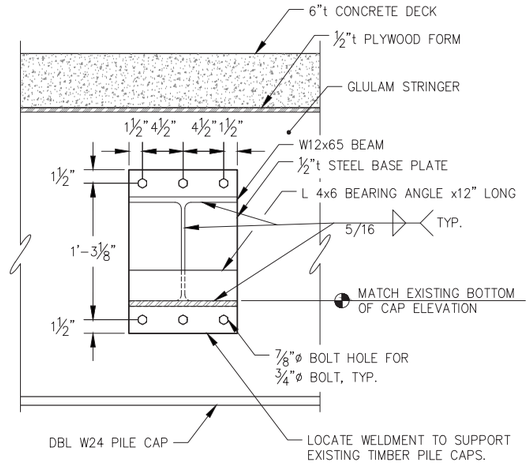

D - **EXISTING CAP SUPPORT BRACKET DETAIL**

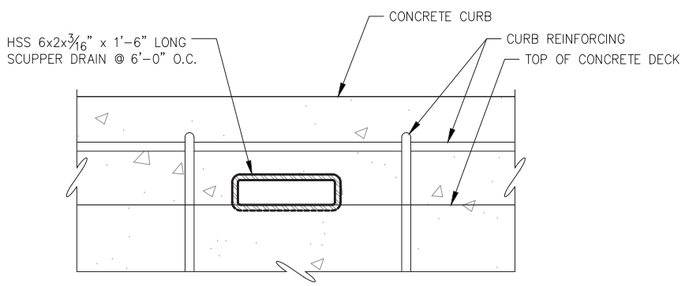

E - **TYPICAL SCUPPER DRAIN DETAIL CENTER BETWEEN GUARDRAIL POSTS, TYP.**

CITY & BOROUGH OF JUNEAU DOCKS & HARBORS

REVISIONS

REV.	DATE	DESCRIPTION	DWN.	CKD.	APP.

P N D ENGINEERS, INC.
9360 Glacier Highway Ste 100
Juneau, Alaska 99801
Phone: 907-586-2093
Fax: 907-586-2099
www.pndengineers.com

DESIGN: MDS CHECKED: CRS
DRAWN: KLL APPROVED: CRS
SCALE: NTS
DATE: 5/23/2019

STATE OF ALASKA 49TH — Charles R. Somerville CE-8845 — REGISTERED PROFESSIONAL ENGINEER

DOWNTOWN WATERFRONT IMPROVEMENTS PHASE I
CBJ CONTRACT NO. DH19-014

SHEET TITLE: **CONCRETE DECK DETAILS**

PND PROJECT NO.: 182045 C.A.N. NO.: AECC250

S2.08

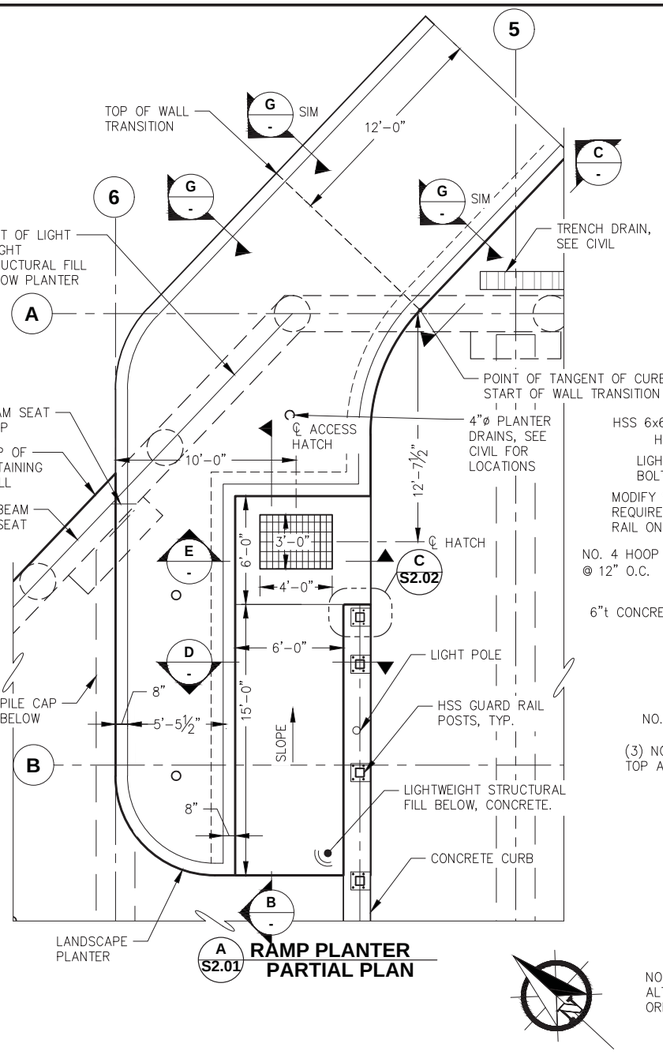

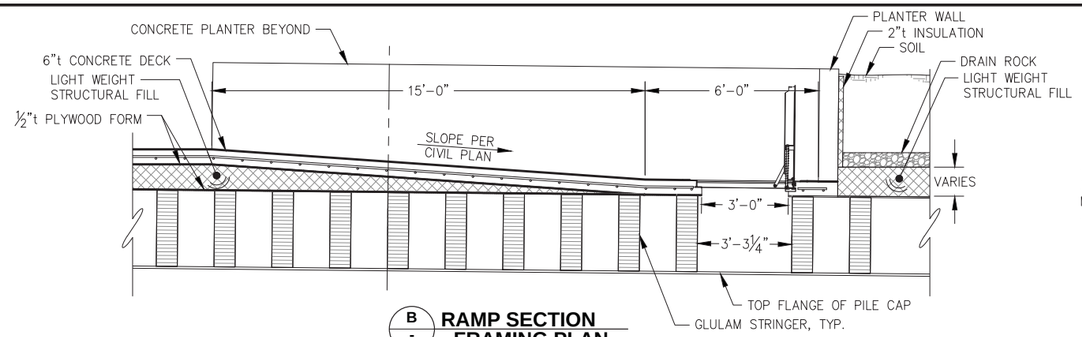

B **RAMP SECTION FRAMING PLAN**

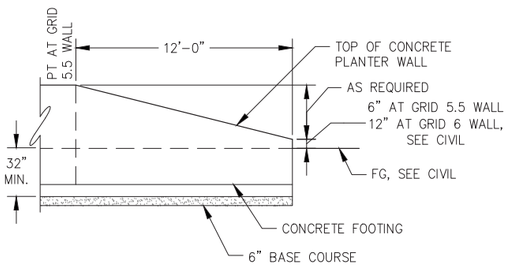

C **PLANTER WALL TRANSITION**

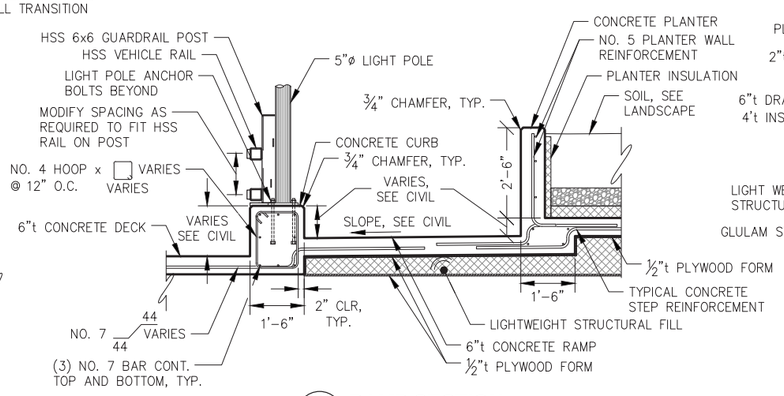

D **RAMP SECTION**

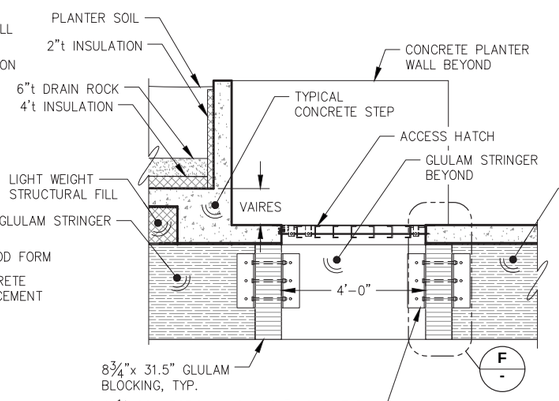

E **ACCESS HATCH SECTION**

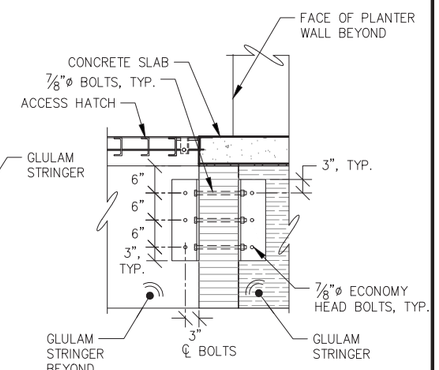

F **ACCESS HATCH SECTION**

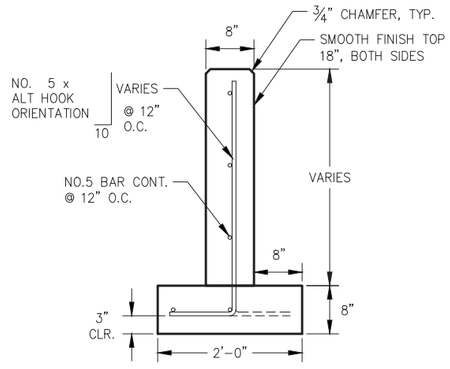

G **PLANTER WALL SECTION**

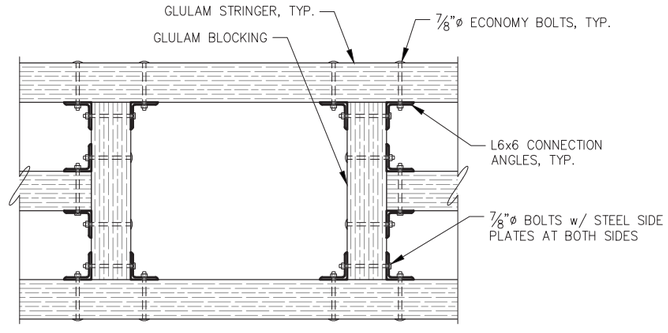

H **HATCH FRAMING PARTIAL PLAN**

CITY & BOROUGH OF JUNEAU DOCKS & HARBORS

REVISIONS

REV.	DATE	DESCRIPTION	DWN.	CKD.	APP.

PND ENGINEERS, INC.
9360 Glacier Highway Ste 100
Juneau, Alaska 99801
Phone: 907-586-2093
Fax: 907-586-2099
www.pndengineers.com

DESIGN: MDS CHECKED: CRS
DRAWN: KLL APPROVED: CRS
SCALE: NTS

STATE OF ALASKA 49TH Charles R. Somerville CE-8845 REGISTERED PROFESSIONAL ENGINEER
DATE: 5/23/2019

DOWNTOWN WATERFRONT IMPROVEMENTS PHASE I
CBJ CONTRACT NO. DH19-014

SHEET TITLE: **CONCRETE DECK DETAILS**

PND PROJECT NO.: 182045 C.A.N. NO.: AECC250

S2.09

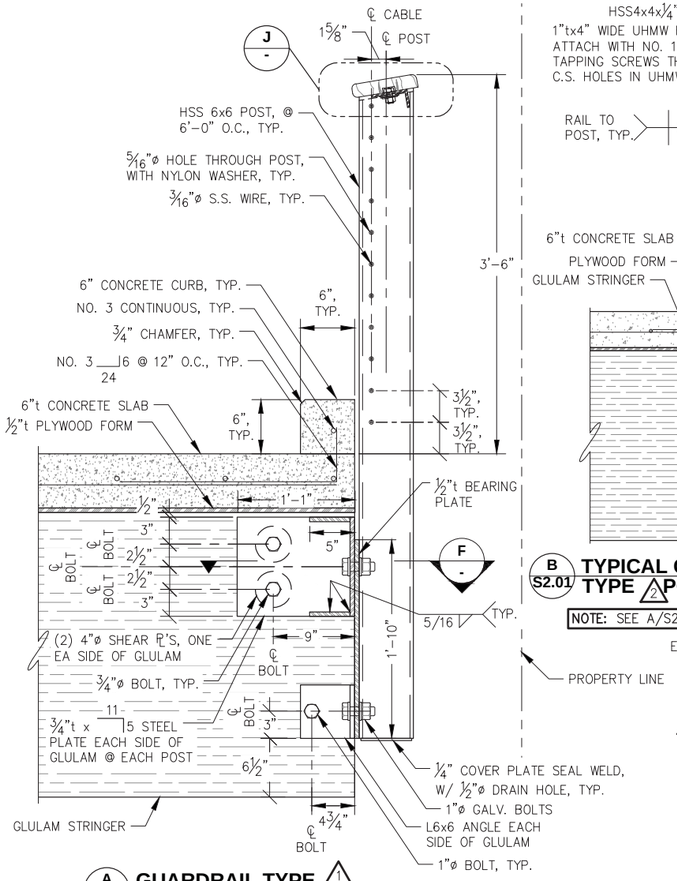

A - GUARDRAIL TYPE 1 POST SECTION

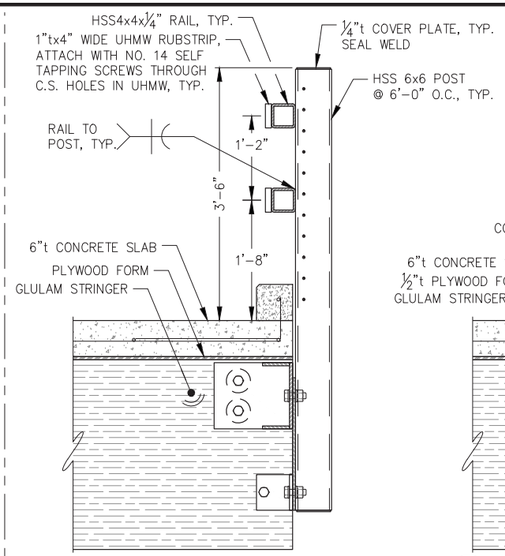

B S2.01 TYPICAL GUARDRAIL TYPE 2 POST CONNECTION DETAIL

NOTE: SEE A/S2.10 FOR CONNECTION DETAIL

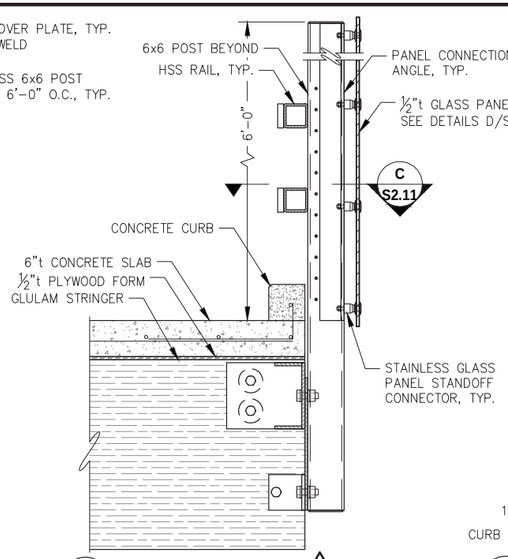

C S2.01 GUARDRAIL TYPE 3 NOISE BARRIER POST SECTION

NOTE: SEE A/S2.10 FOR CONNECTION DETAIL

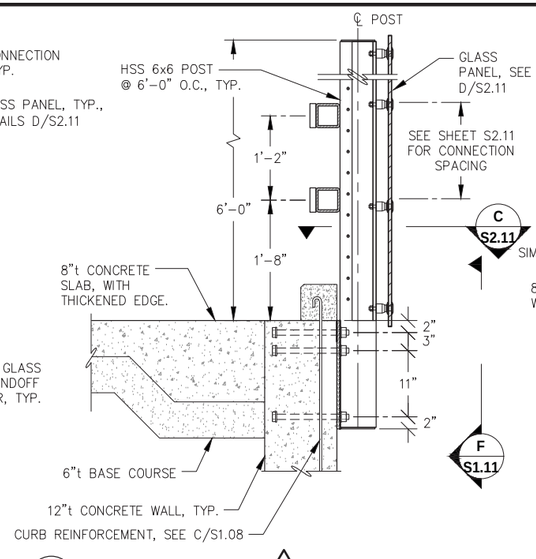

D S2.01 GUARDRAIL TYPE 4 POST CONNECTION AT CONCRETE WALL W/ NOISE BARRIER

NOTE: SEE A/S2.10 FOR NOTES NOT CALLED OUT

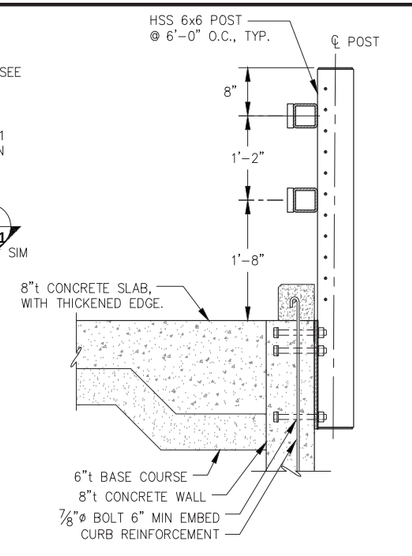

E S2.01 GUARDRAIL TYPE 5 POST CONNECTION AT CONCRETE WALL

NOTE: SEE A/S2.10 FOR NOTES NOT CALLED OUT

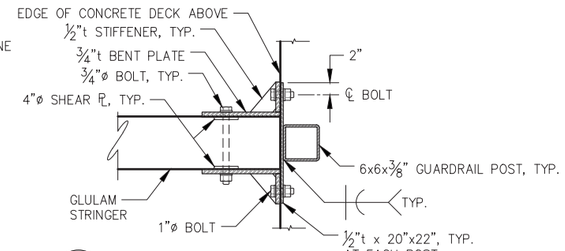

F - RAIL POST CONNECTION SECTION

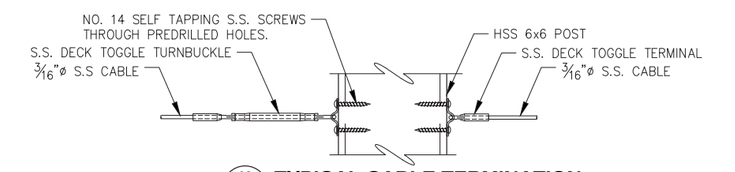

K - TYPICAL CABLE TERMINATION DETAILS

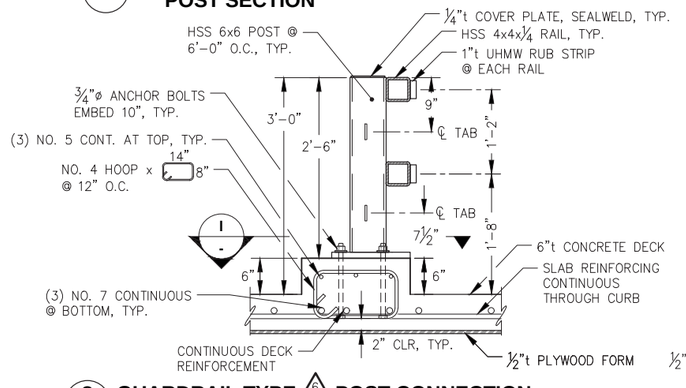

G S2.01 GUARDRAIL TYPE 6 POST CONNECTION AT SURFACE MOUNT LOCATION

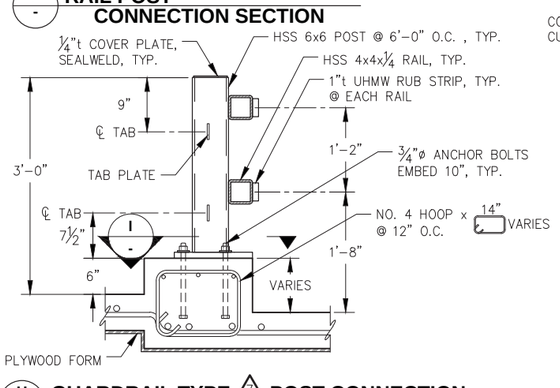

H - GUARDRAIL TYPE 7 POST CONNECTION AT SURFACE MOUNT LOCATION

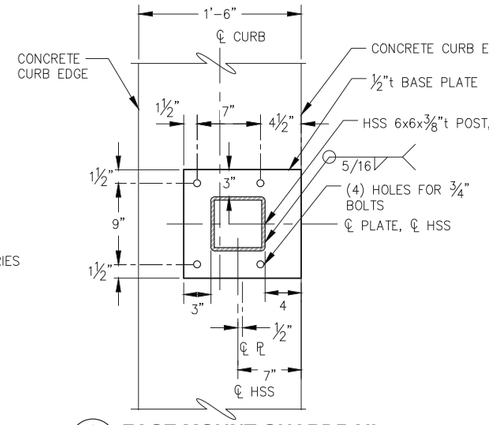

I - FACE MOUNT GUARDRAIL POST CONNECTION DETAIL

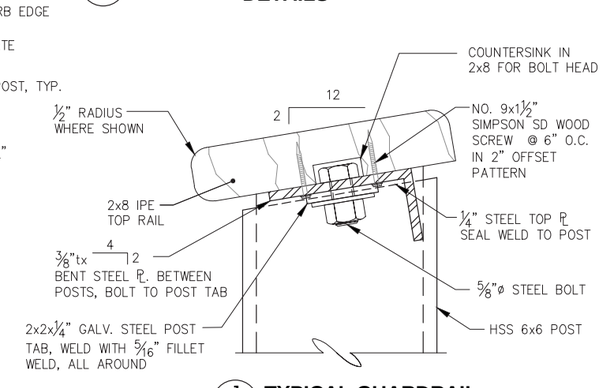

J - TYPICAL GUARDRAIL TOP RAIL DETAIL

CITY & BOROUGH OF JUNEAU DOCKS & HARBORS

REVISIONS

REV.	DATE	DESCRIPTION	DWN.	CKD.	APP.

PND ENGINEERS, INC.
9360 Glacier Highway Ste 100
Juneau, Alaska 99801
Phone: 907-586-2093
Fax: 907-586-2099
www.pndengineers.com

DESIGN: MDS CHECKED: CRS
DRAWN: KLL APPROVED: CRS
SCALE: NTS

STATE OF ALASKA 49TH Charles R. Somerville CE-8845 REGISTERED PROFESSIONAL ENGINEER
DATE: 5/23/2019

DOWNTOWN WATERFRONT IMPROVEMENTS PHASE I
CBJ CONTRACT NO. DH19-014

SHEET TITLE:
CONCRETE DECK RAILING SECTIONS AND ELEVATIONS

S2.10

PND PROJECT NO.: 182045 C.A.N. NO.: AECC250

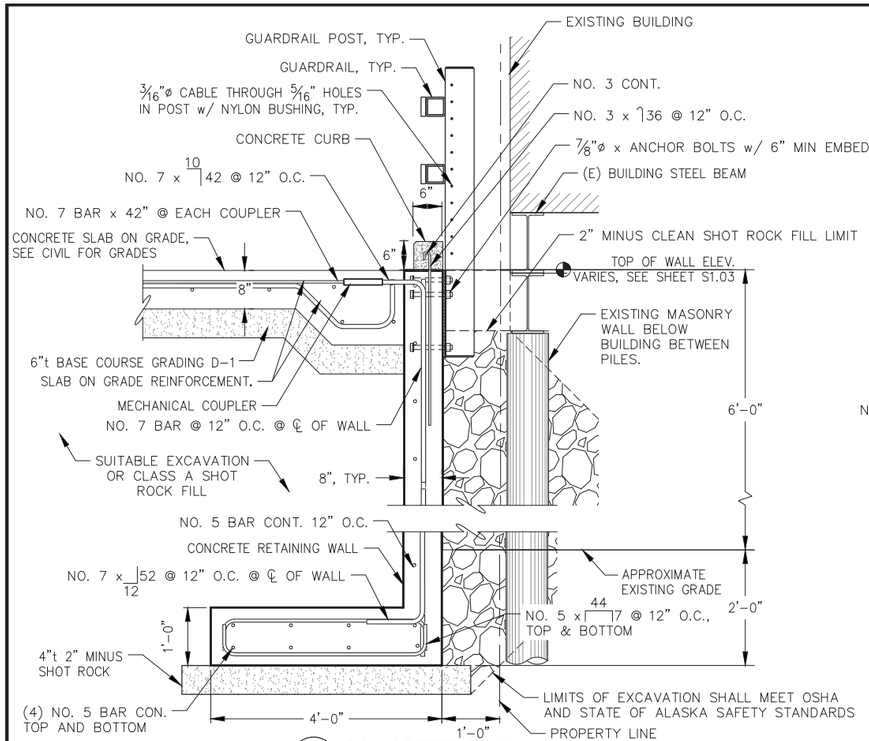

A S2.01 **CONCRETE WALL SECTION**

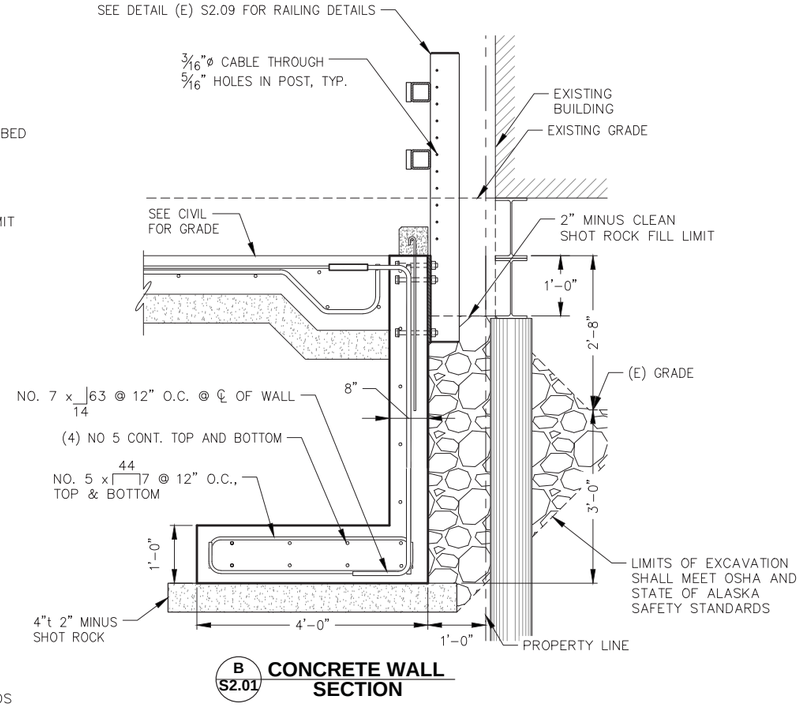

B S2.01 **CONCRETE WALL SECTION**

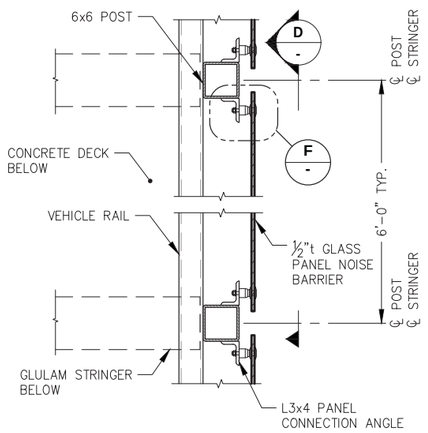

C - **VEHICLE RAIL NOISE BARRIER PANEL SECTION**

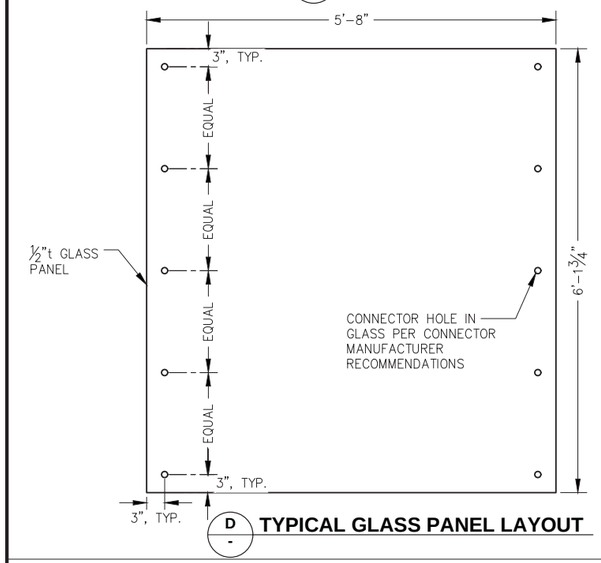

D - **TYPICAL GLASS PANEL LAYOUT**

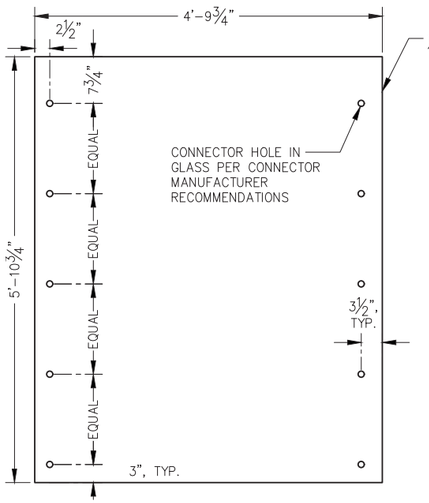

E - **GLASS PANEL AT GATE LAYOUT**

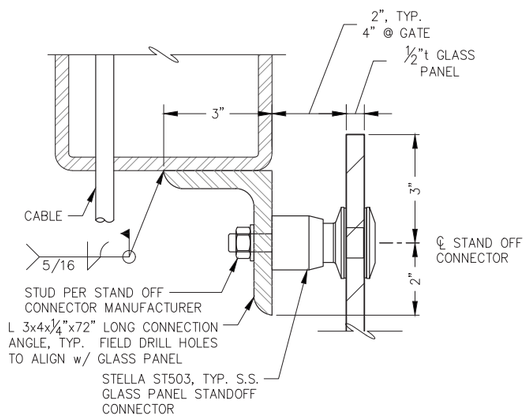

F - **TYPICAL GLASS STAND OFF CONNECTOR**

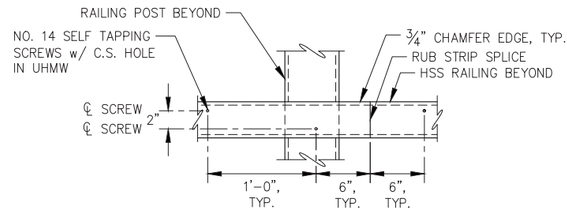

K - **RUB STRIP PROFILE**

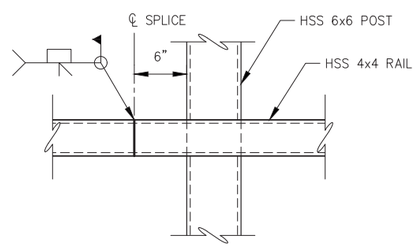

G - **TYPICAL RAIL SPLICE**

NOTE: LOCATE SPLICE IN OVERALL LENGTH OF RAILING AS REQ. FOR EASE OF CONSTRUCTION

CITY & BOROUGH OF JUNEAU DOCKS & HARBORS

REVISIONS

REV.	DATE	DESCRIPTION	DWN.	CKD.	APP.

P N D ENGINEERS, INC.
9360 Glacier Highway Ste 100
Juneau, Alaska 99801
Phone: 907-586-2093
Fax: 907-586-2099
www.pndengineers.com

DESIGN: MDS CHECKED: CRS
DRAWN: KLL APPROVED: CRS
SCALE: NTS
DATE: 5/23/2019

STATE OF ALASKA 49TH Charles R. Somerville CE-8845 REGISTERED PROFESSIONAL ENGINEER

DOWNTOWN WATERFRONT IMPROVEMENTS PHASE I
CBJ CONTRACT NO. DH19-014

SHEET TITLE:
CONCRETE WALL SECTIONS AND MISCELLANEOUS RAILING DETAIL

S2.11

PND PROJECT NO.: 182045 C.A.N. NO.: AECC250

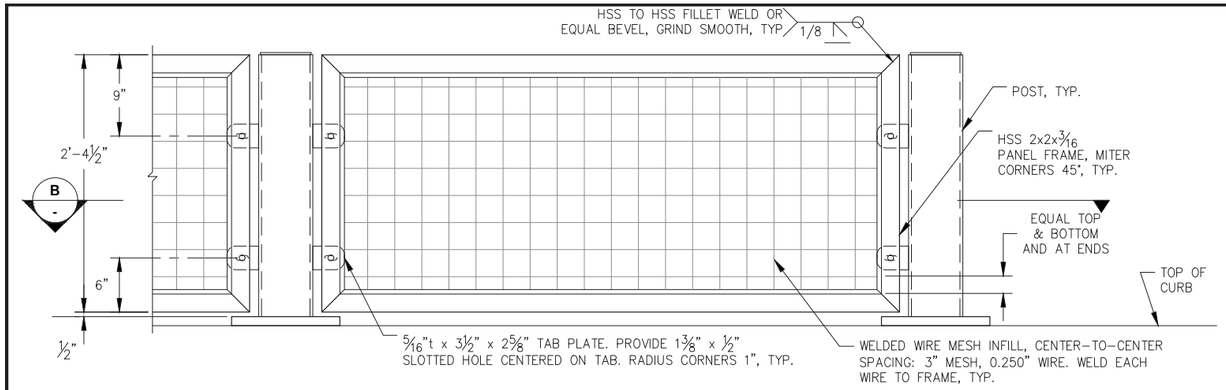

A - **TYPICAL RAILING PANEL FRAME ELEVATION**

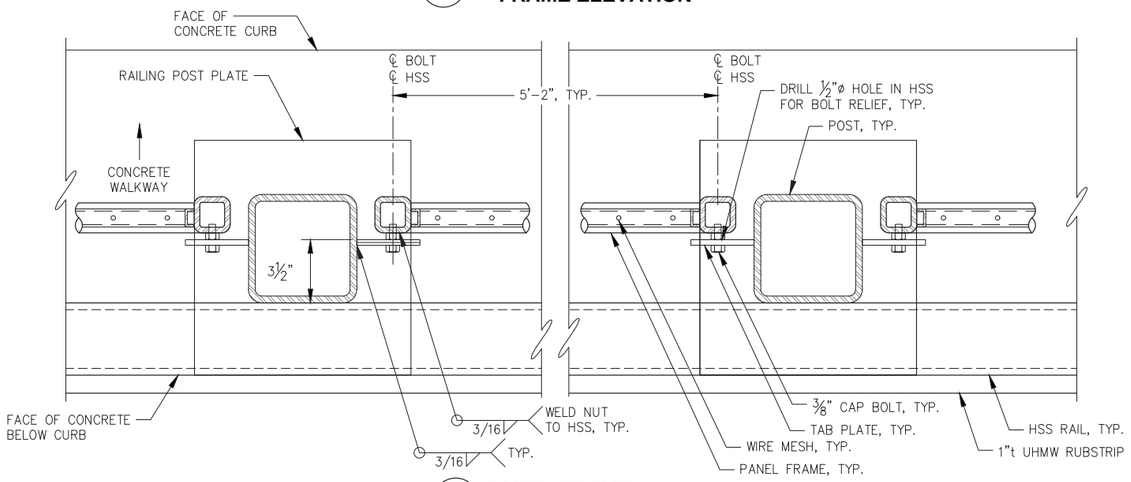

B - **PANEL FRAME CONNECTION DETAIL**

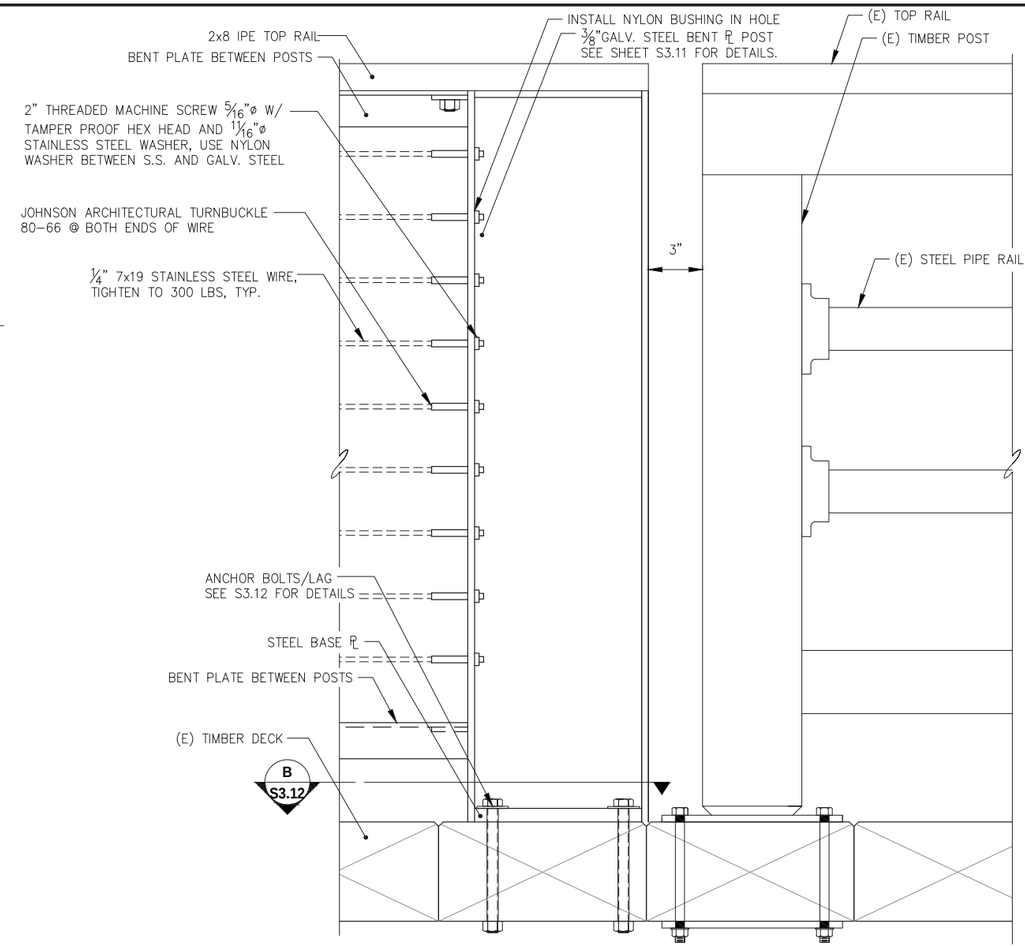

C S2.01 **SEAWALK GUARDRAIL DETAILS**

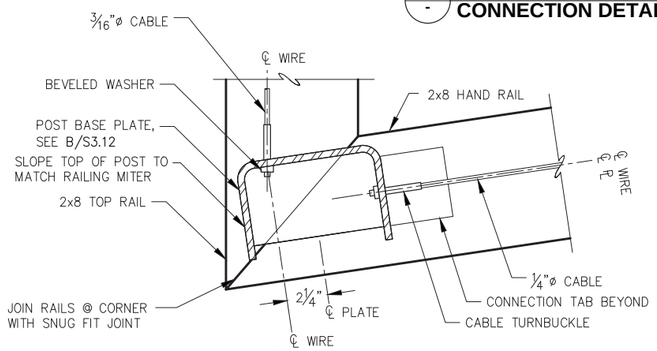

D S2.01 **CORNER POST PLAN**

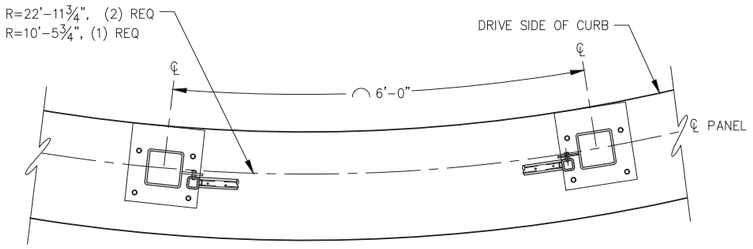

E - **PANEL FRAME CONNECTIN DETAIL**

NOTE: CONTRACTOR SHALL PROVIDE SHOP DRAWINGS OF PANEL FRAMES TO MATCH RADIUS OF CURB.

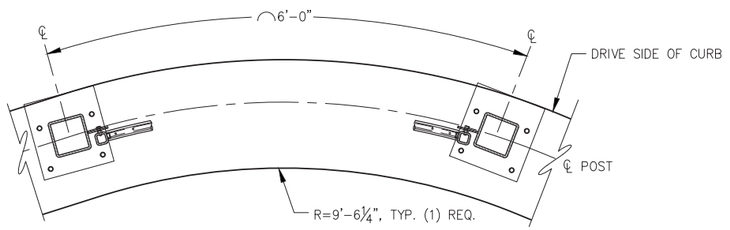

F - **PANEL FRAME CONNECTIN DETAIL**

NOTE: CONTRACTOR SHALL PROVIDE SHOP DRAWINGS OF PANEL FRAMES TO MATCH RADIUS OF CURB.

CITY & BOROUGH OF JUNEAU DOCKS & HARBORS

REVISIONS

REV.	DATE	DESCRIPTION	DWN.	CKD.	APP.

PND ENGINEERS, INC.
9360 Glacier Highway Ste 100
Juneau, Alaska 99801
Phone: 907-586-2093
Fax: 907-586-2099
www.pndengineers.com

DESIGN: MDS CHECKED: CRS
DRAWN: KLL APPROVED: CRS
SCALE: NTS

STATE OF ALASKA 49 TH Charles R. Somerville CE-8845 REGISTERED PROFESSIONAL ENGINEER
DATE: 5/23/2019

DOWNTOWN WATERFRONT IMPROVEMENTS PHASE I
CBJ CONTRACT NO. DH19-014

SHEET TITLE:
MISCELLANEOUS RAILING DETAIL

S2.12

PND PROJECT NO.: 182045 C.A.N. NO.: AECC250

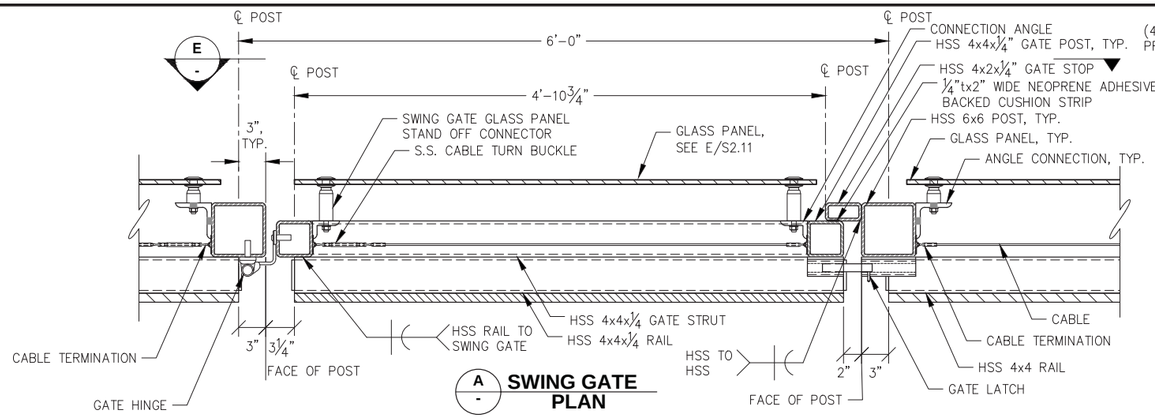

A SWING GATE PLAN

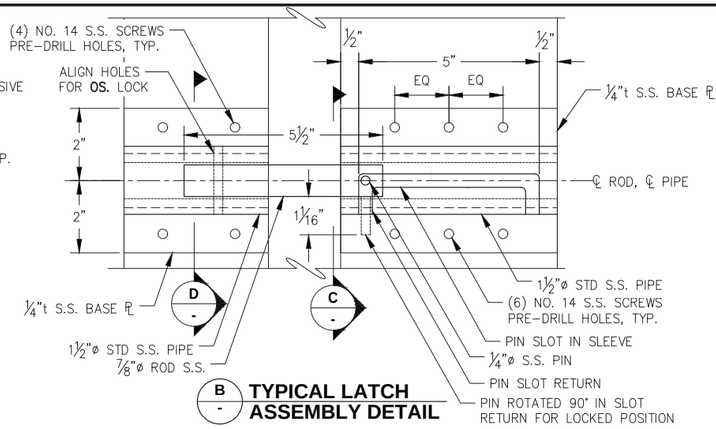

B TYPICAL LATCH ASSEMBLY DETAIL

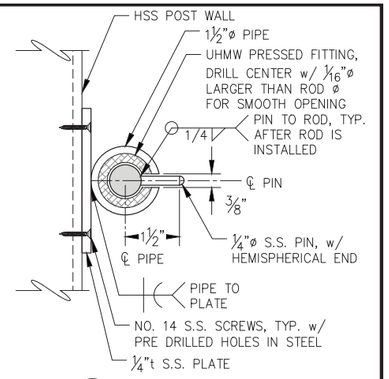

C ROD SLEEVE SECTION

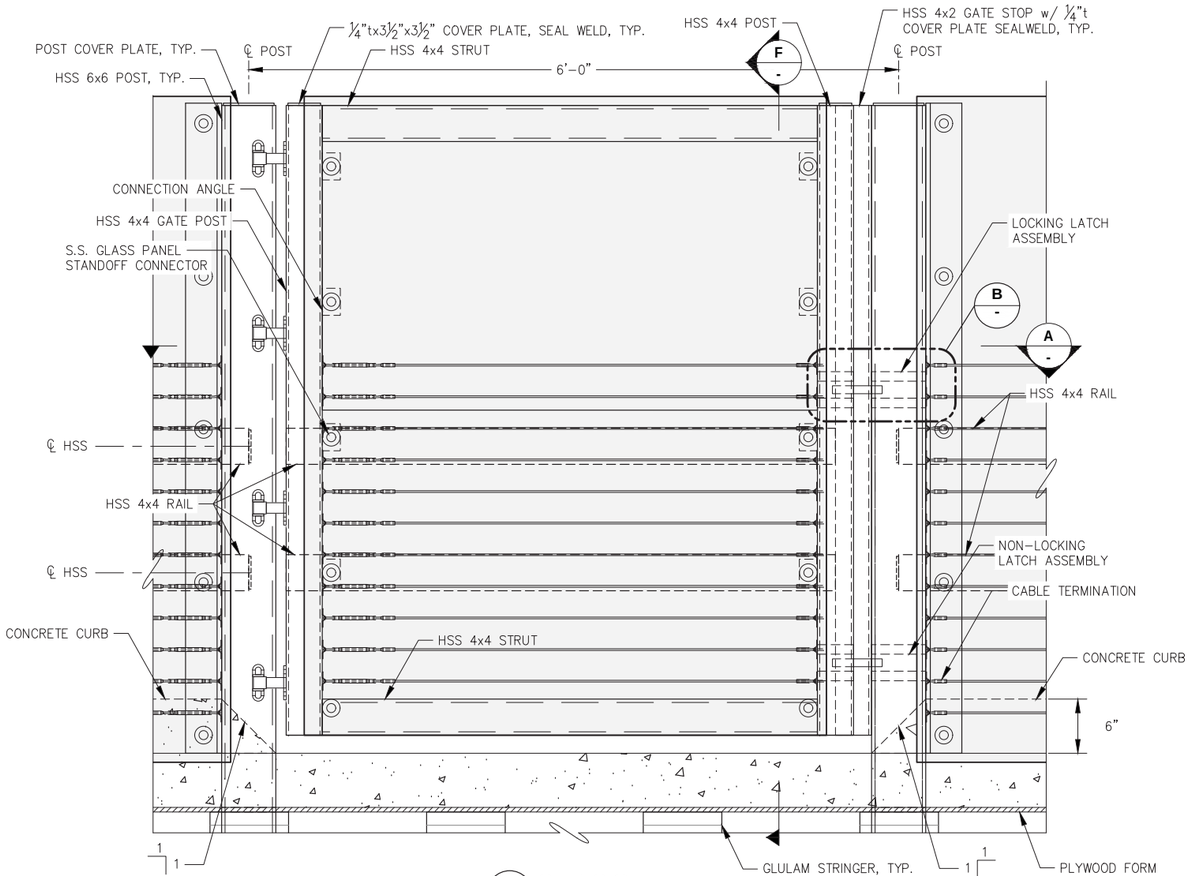

E SWING GATE ELEVATION

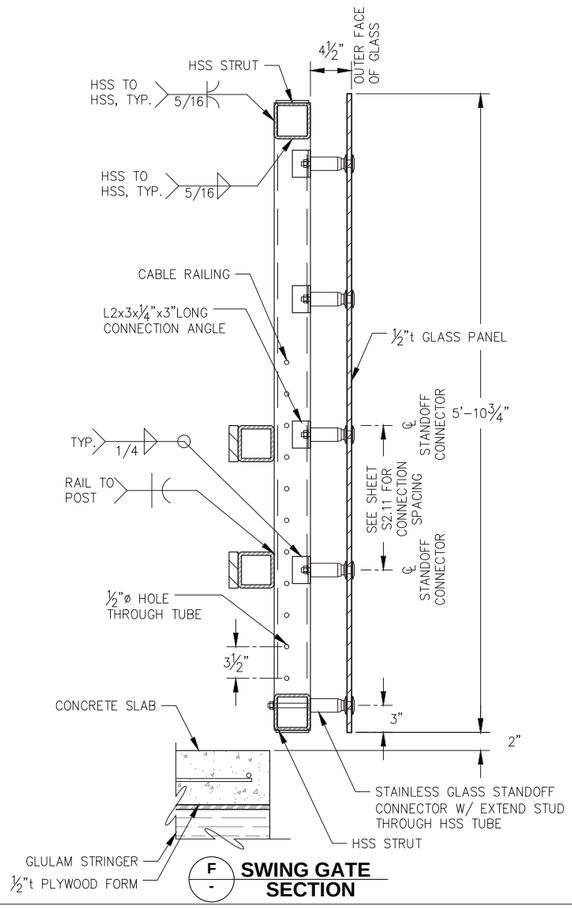

F SWING GATE SECTION

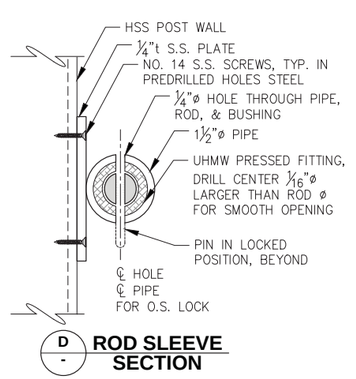

D ROD SLEEVE SECTION

NOTE:
1. FOR NON–LOCKING LATCH, NO HOLE REQUIRED ON RECEIVER SLEEVE.

2. CUT BUSHING TO MATCH STEEL PIPE SLOT @ BOTH ENDS OF SLOT, BUSHING MAY BE CUT AFTER INSTALLATION TO VERIFY ALIGNMENT.

CITY & BOROUGH OF JUNEAU DOCKS & HARBORS

REVISIONS

REV.	DATE	DESCRIPTION	DWN.	CKD.	APP.

PND ENGINEERS, INC.
9360 Glacier Highway Ste 100
Juneau, Alaska 99801
Phone: 907-586-2093
Fax: 907-586-2099
www.pndengineers.com

DESIGN: MDS CHECKED: CRS
DRAWN: KLL APPROVED: CRS
SCALE: NTS

STATE OF ALASKA 49TH — Charles R. Somerville CE-8845 — REGISTERED PROFESSIONAL ENGINEER
DATE: 5/23/2019

DOWNTOWN WATERFRONT IMPROVEMENTS PHASE I
CBJ CONTRACT NO. DH19-014

SHEET TITLE: **SWING GATE PLAN, ELEVATION, AND SECTION**

PND PROJECT NO.: 182045 C.A.N. NO.: AECC250

S2.13

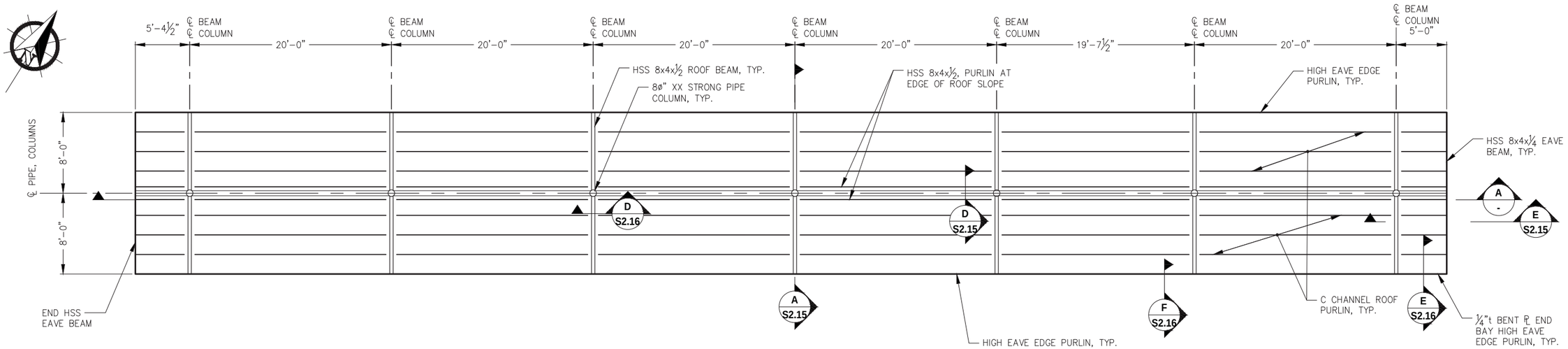

1 - **PARKING CANOPY ROOF FRAMING PLAN**

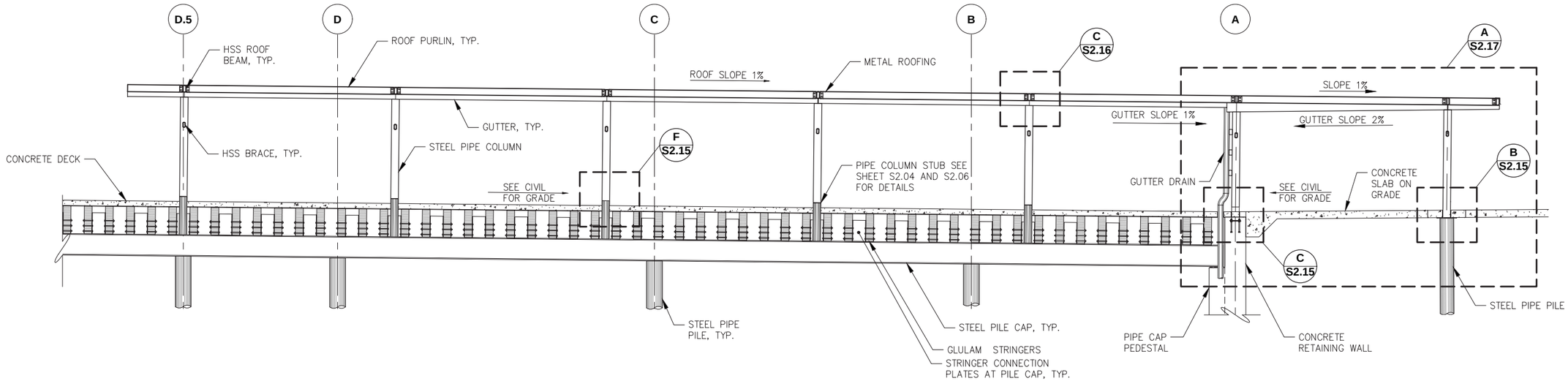

A - **PARKING CANOPY ELEVATION**

NOTE: SEE SHEET S2.04 FOR COLUMN ALIGNMENT w/ PILE CAP.

REVISIONS

REV.	DATE	DESCRIPTION	DWN.	CKD.	APP.

P N D ENGINEERS, INC.
9360 Glacier Highway Ste 100
Juneau, Alaska 99801
Phone: 907-586-2093
Fax: 907-586-2099
www.pndengineers.com

DESIGN: MDS CHECKED: CRS
DRAWN: KLL APPROVED: CRS
SCALE: SCALE IN FEET 0 5 10 FT.

STATE OF ALASKA 49 TH Charles R. Somerville CE-8845 REGISTERED PROFESSIONAL ENGINEER
DATE: 5/20/2019

DOWNTOWN WATERFRONT IMPROVEMENTS PHASE I
CBJ CONTRACT NO. DH19-014

SHEET TITLE: **PARKING CANOPY PLAN**

S2.14

PND PROJECT NO.: 182045 C.A.N. NO.: AECC250

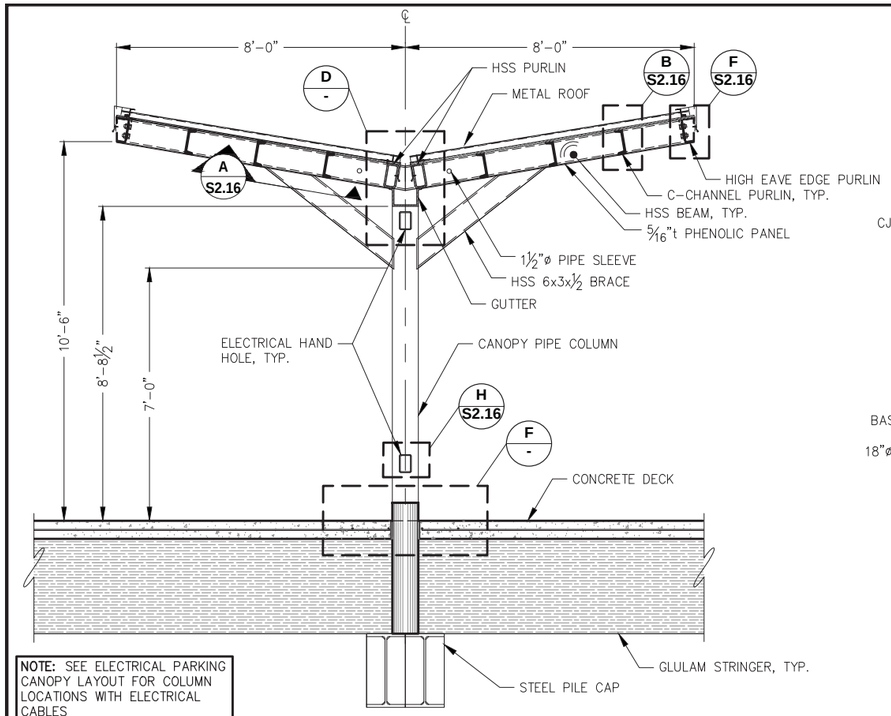

NOTE: SEE ELECTRICAL PARKING CANOPY LAYOUT FOR COLUMN LOCATIONS WITH ELECTRICAL CABLES

A S2.14 TYPICAL PARKING CANOPY SECTION

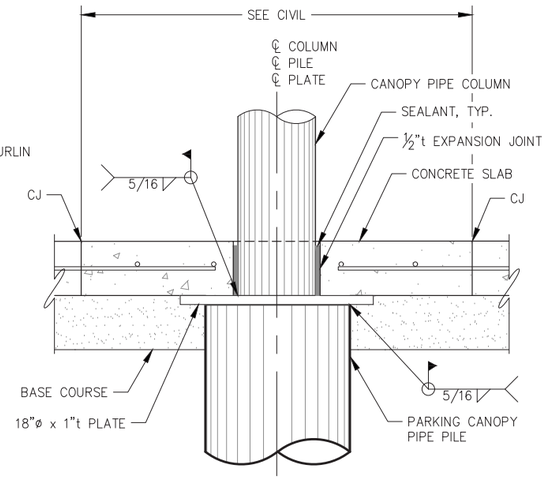

B S2.14 SHORE SIDE CANOPY CONCRETE COLLAR

(1 EA REQUIRED)

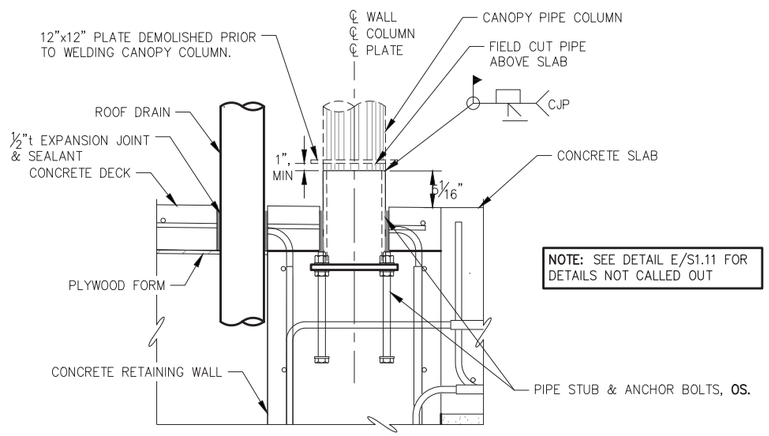

C S2.14 COLUMN BASE CONNECTION DETAIL AT RETAINING WALL

(1 EA REQUIRED)

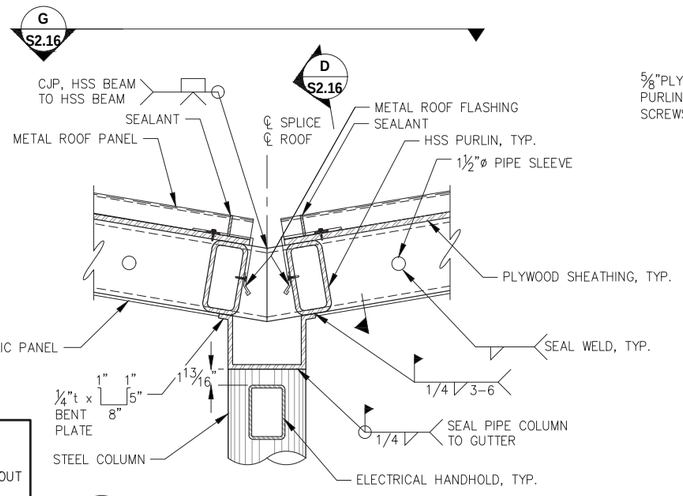

NOTE: SEE ELECTRICAL PARKING CANOPY LAYOUT FOR COLUMN LOCATIONS WITH ELECTRICAL CABLES

D S2.14 TYPICAL PARKING CANOPY ROOF BEAM AND GUTTER DETAIL

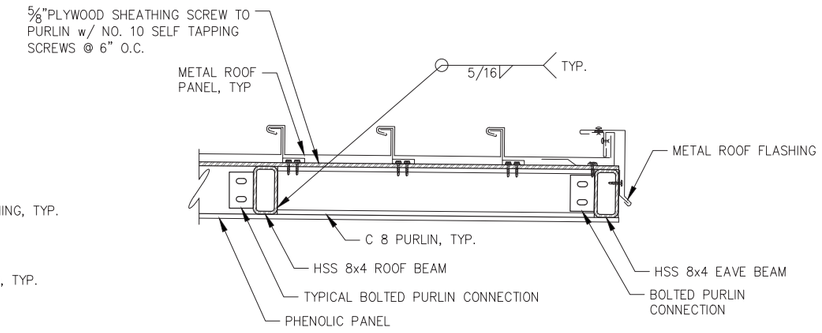

E S2.14 END EAVE DETAIL

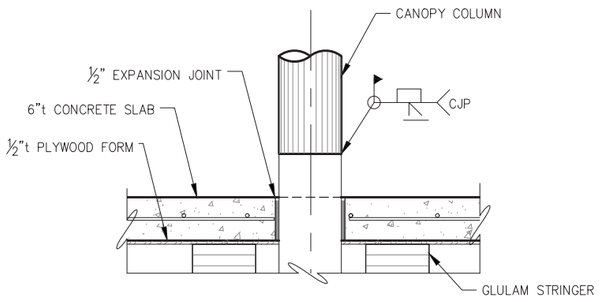

F - CANOPY COLUMN BASE CONNECTION DETAIL

REVISIONS

REV.	DATE	DESCRIPTION	DWN.	CKD.	APP.

P N D ENGINEERS, INC.
9360 Glacier Highway Ste 100
Juneau, Alaska 99801
Phone: 907-586-2093
Fax: 907-586-2099
www.pndengineers.com

DESIGN: MDS CHECKED: CRS
DRAWN: KLL APPROVED: CRS
SCALE: NTS
DATE: 5/23/2019

STATE OF ALASKA 49TH C.R. Somerville Charles R. Somerville CE-8845 REGISTERED PROFESSIONAL ENGINEER

DOWNTOWN WATERFRONT IMPROVEMENTS PHASE I
CBJ CONTRACT NO. DH19-014

SHEET TITLE: **PARKING CANOPY SECTIONS AND DETAILS**

PND PROJECT NO.: 182045 C.A.N. NO.: AECC250

S2.15

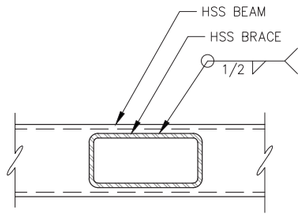

A S2.15 TYPICAL CANOPY BRACE TO BEAM CONNECTION

NOTE:
CONNECT BRACE COLUMN SIMILAR, NOTCH BRACES TO FORM TIGHT FIT w/ ROUND PIPE COLUMN.

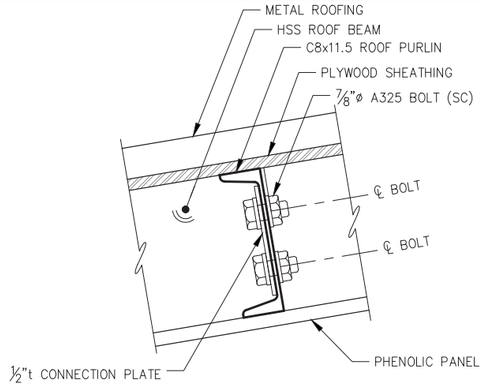

B S2.15 TYPICAL ROOF PURLIN TO ROOF BEAM CONNECTION

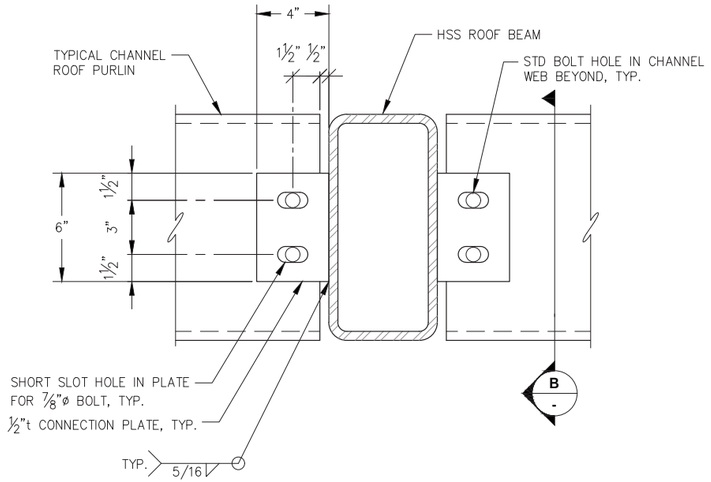

C S2.14 TYPICAL ROOF PURLIN TO BEAM CONNECTION

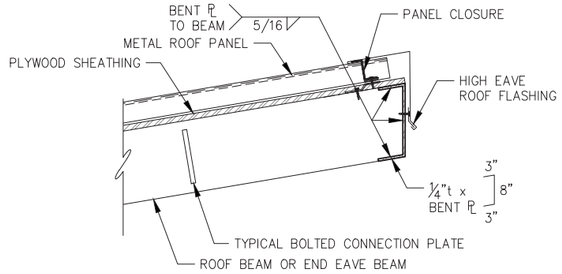

E S2.14 ROOF EAVE SECTION AT END BAY PURLINS

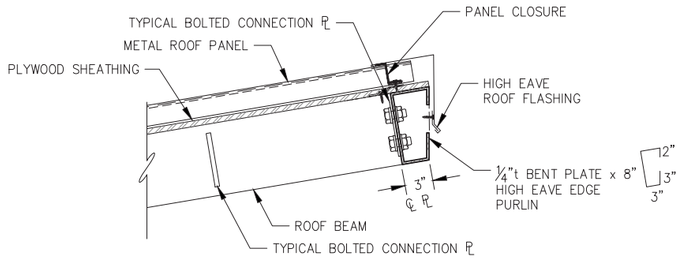

F S2.14 TYPICAL HIGH EAVE ROOF SECTION

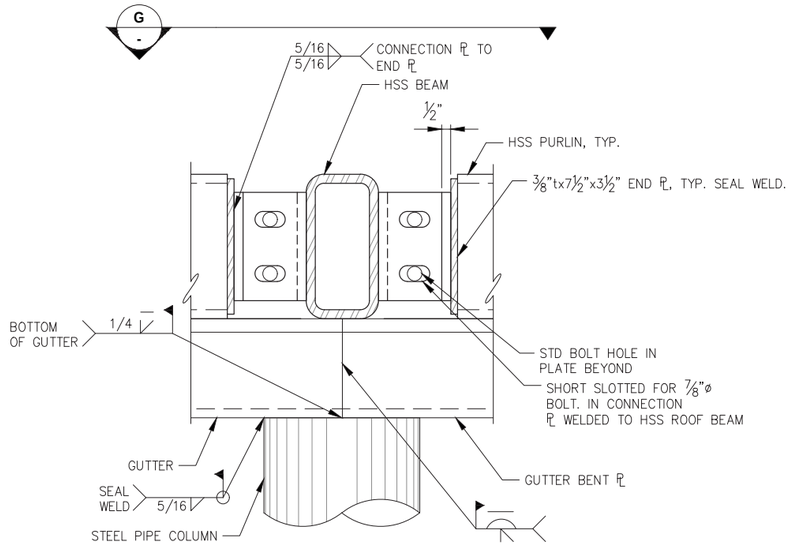

D S2.14 TYPICAL GUTTER SPLICE AND HSS PURLIN CONNECTION

NOTE:
1. CONTRACTOR TO LOCATE GUTTER FIELD SPLICE LOCATIONS. SPLICES SHALL BE LOCATED AT COLUMNS.
2. ALL HSS MEMBRANE SHALL HAVE ½"ø DRAIN HOLES AT LOWEST POINTS. DRAIN HOLES SHALL BE SHOWN ON SHOP DRAWINGS PRIOR TO FABRICATION.

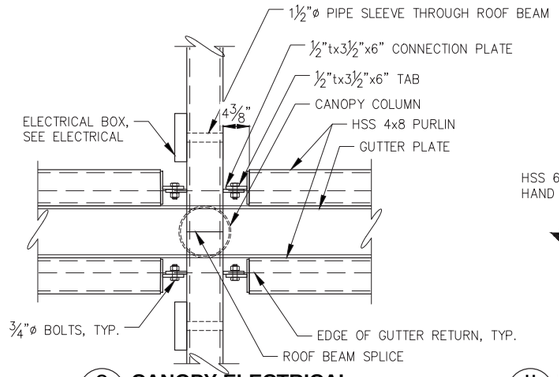

G - CANOPY ELECTRICAL PARTIAL PLAN

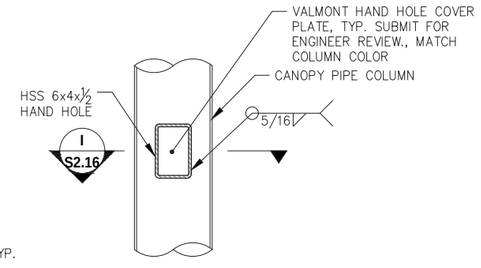

H - TYPICAL ELECTRICAL HAND HOLE

(3) REQ., TWO ON COLUMN ONE ON COLUMN STUB

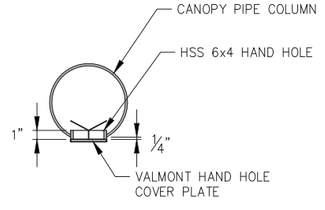

I - ELECTRICAL HAND HOLE SECTION

REVISIONS

REV.	DATE	DESCRIPTION	DWN.	CKD.	APP.

P N D ENGINEERS, INC.
9360 Glacier Highway Ste 100
Juneau, Alaska 99801
Phone: 907-586-2093
Fax: 907-586-2099
www.pndengineers.com

DESIGN: MDS CHECKED: CRS
DRAWN: KLL APPROVED: CRS
SCALE: NTS
DATE: 5/23/2019

STATE OF ALASKA 49TH
Charles R. Somerville
CE-8845
REGISTERED PROFESSIONAL ENGINEER

DOWNTOWN WATERFRONT IMPROVEMENTS PHASE I
CBJ CONTRACT NO. DH19-014

SHEET TITLE:
PARKING CANOPY SECTIONS AND DETAILS

PND PROJECT NO.: 182045 C.A.N. NO.: AECC250

S2.16

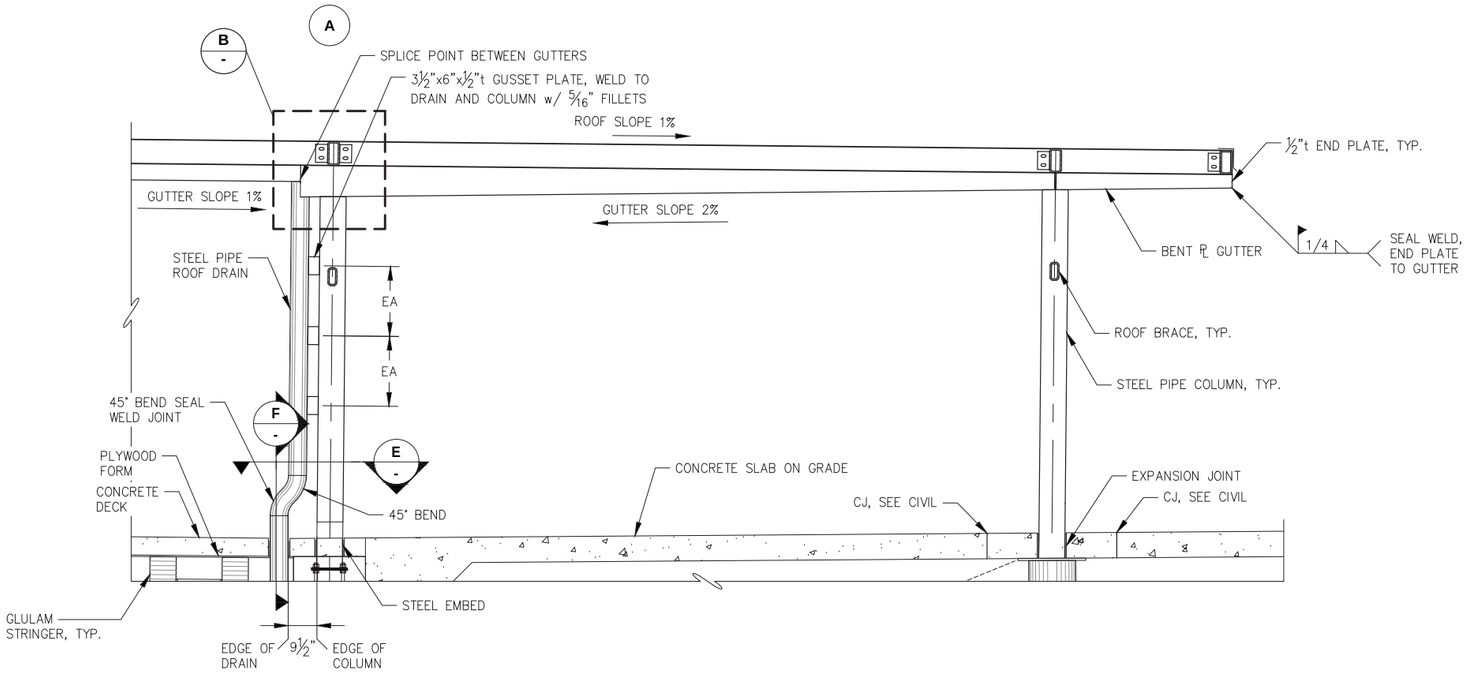

A S2.14 **CANOPY PARTIAL ELEVATION**

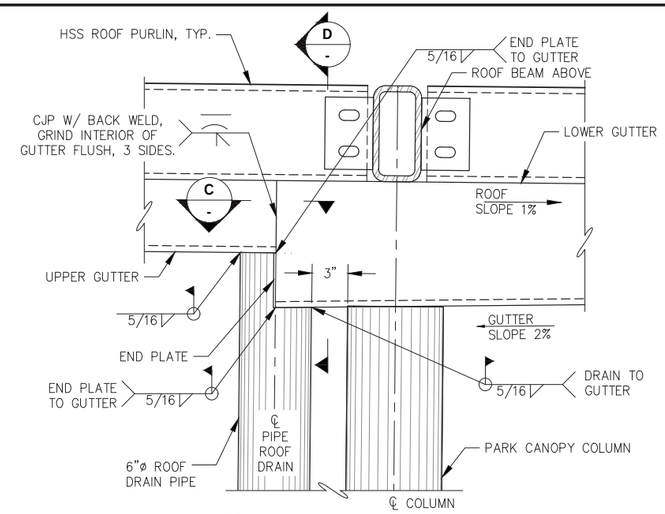

B - **GUTTER TO DRAIN DETAIL**

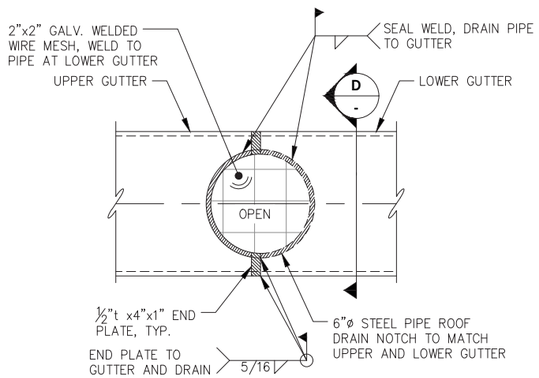

C - **GUTTER TO DRAIN SECTION**

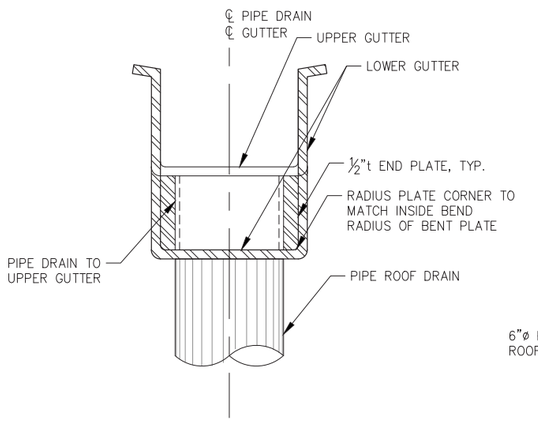

D - **GUTTER TO DRAIN SECTION**

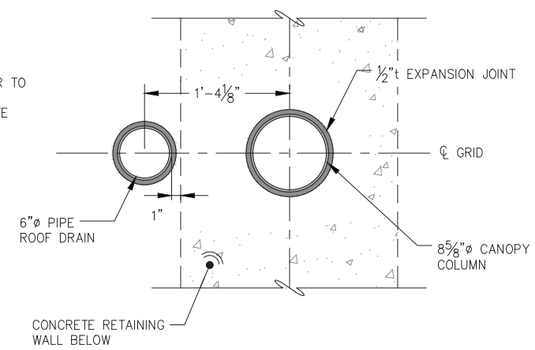

E - **PEDESTAL PLAN**

F - **PIPE DETAIL BELOW CONCRETE DECK**

REVISIONS

REV.	DATE	DESCRIPTION	DWN.	CKD.	APP.

PND ENGINEERS, INC.
9360 Glacier Highway Ste 100
Juneau, Alaska 99801
Phone: 907-586-2093
Fax: 907-586-2099
www.pndengineers.com

DESIGN: MDS CHECKED: CRS
DRAWN: KLL APPROVED: CRS
SCALE: NTS
DATE: 5/23/2019

STATE OF ALASKA 49TH — Charles R. Somerville CE-8845 — REGISTERED PROFESSIONAL ENGINEER

DOWNTOWN WATERFRONT IMPROVEMENTS PHASE I
CBJ CONTRACT NO. DH19-014

SHEET TITLE: **PARKING CANOPY SECTIONS AND DETAILS**

S2.17

PND PROJECT NO.: 182045 C.A.N. NO.: AECC250

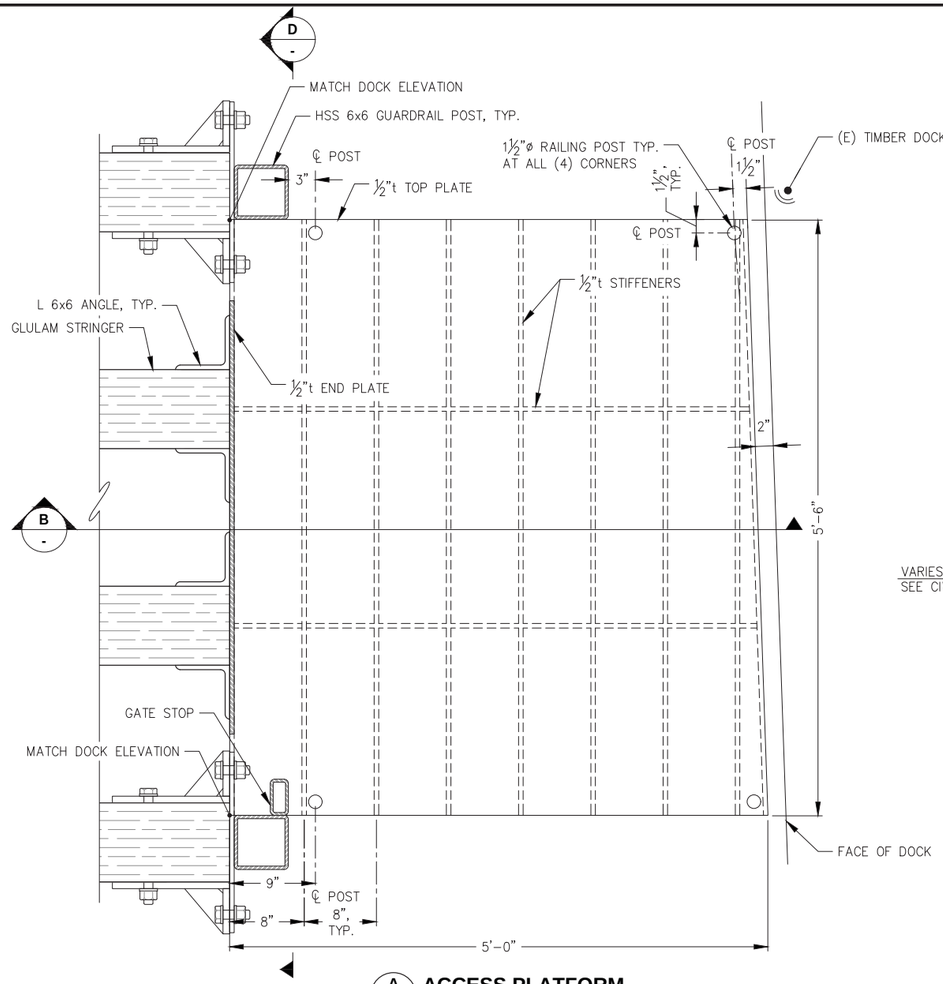

A - ACCESS PLATFORM PLAN

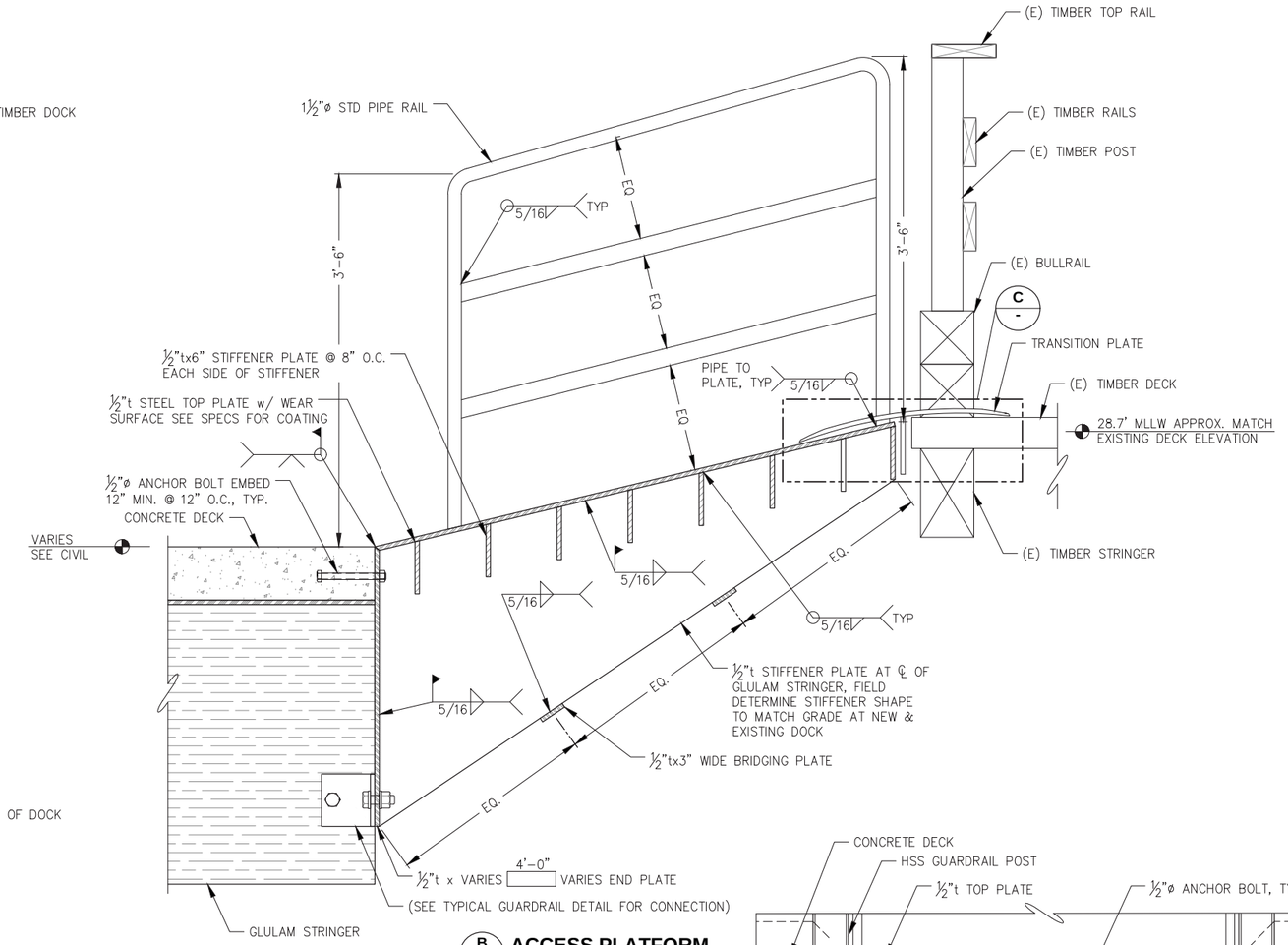

B - ACCESS PLATFORM SECTION

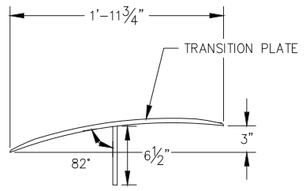

C - TRANSITION PLATE DETAIL

NOTE: FOR DETAILS NOT CALLED OUT, SEE A/S1.15

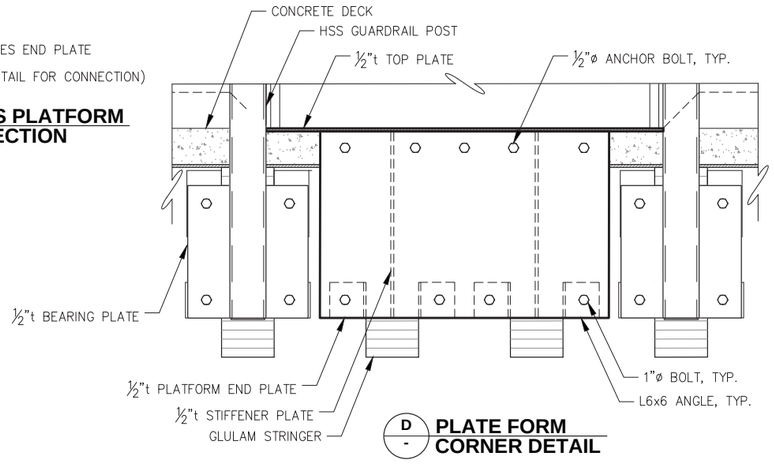

D - PLATE FORM CORNER DETAIL

CITY & BOROUGH OF JUNEAU DOCKS & HARBORS

REVISIONS

REV.	DATE	DESCRIPTION	DWN.	CKD.	APP.

PND ENGINEERS, INC.
9360 Glacier Highway Ste 100
Juneau, Alaska 99801
Phone: 907-586-2093
Fax: 907-586-2099
www.pndengineers.com

DESIGN: MDS CHECKED: CRS
DRAWN: KLL APPROVED: CRS
SCALE: NTS

STATE OF ALASKA 49TH Charles R. Somerville CE-8845 REGISTERED PROFESSIONAL ENGINEER
DATE: 5/29/2019

DOWNTOWN WATERFRONT IMPROVEMENTS PHASE I
CBJ CONTRACT NO. DH19-014

SHEET TITLE: **ACCESS PLATFORM**

PND PROJECT NO.: 182045 C.A.N. NO.: AECC250

S2.18

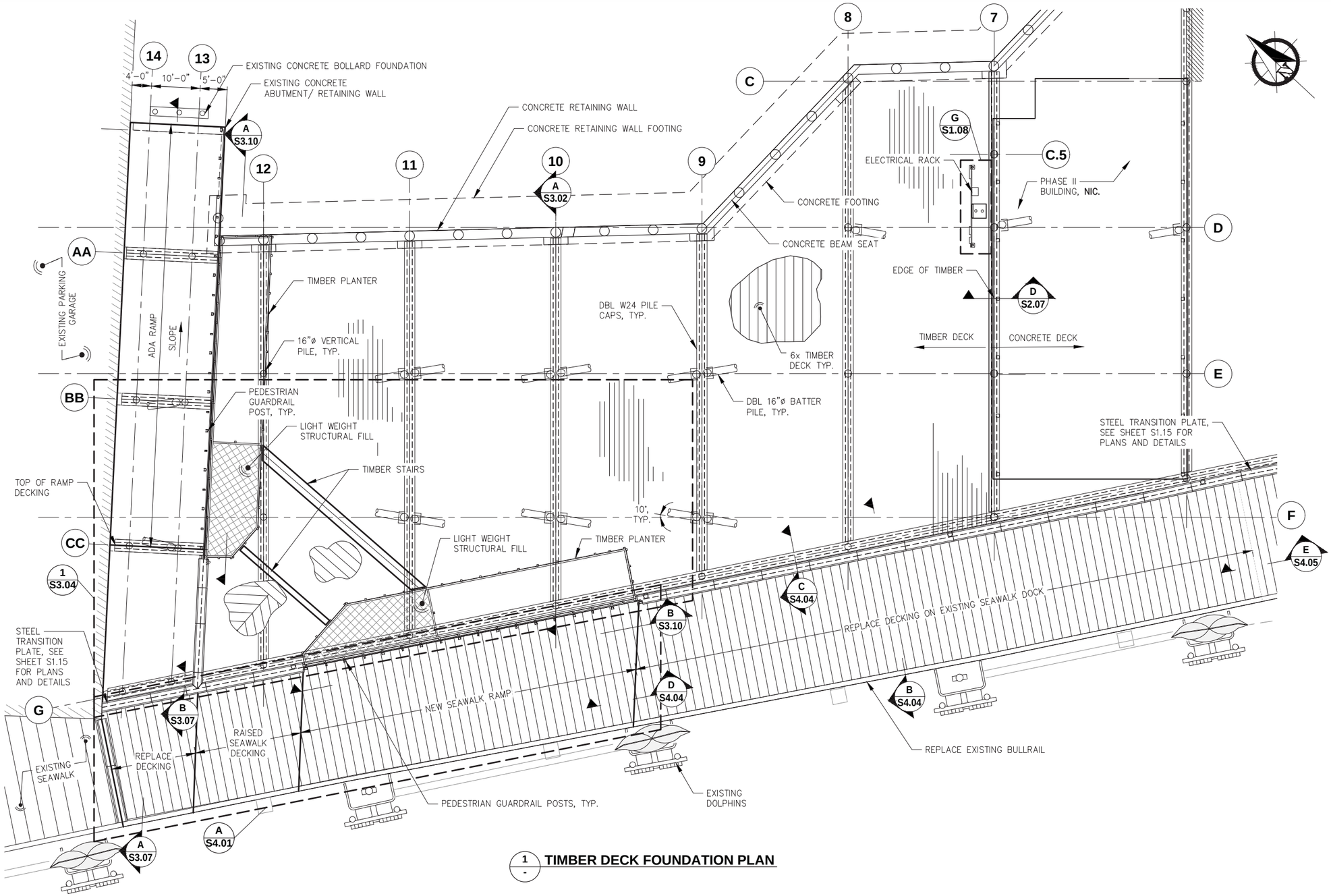

1 - **TIMBER DECK FOUNDATION PLAN**

REVISIONS

REV.	DATE	DESCRIPTION	DWN.	CKD.	APP.

PND ENGINEERS, INC.
9360 Glacier Highway Ste 100
Juneau, Alaska 99801
Phone: 907-586-2093
Fax: 907-586-2099
www.pndengineers.com

DESIGN: MDS CHECKED: CRS
DRAWN: KLL APPROVED: CRS
SCALE: SCALE IN FEET 0 10 20 FT.

STATE OF ALASKA 49 TH
Charles R. Somerville CE-8845
REGISTERED PROFESSIONAL ENGINEER
DATE: 5/23/2019

DOWNTOWN WATERFRONT IMPROVEMENTS PHASE I
CBJ CONTRACT NO. DH19-014

SHEET TITLE: **TIMBER DECK PARTIAL PLAN**

PND PROJECT NO.: 182045 C.A.N. NO.: AECC250

S3.01

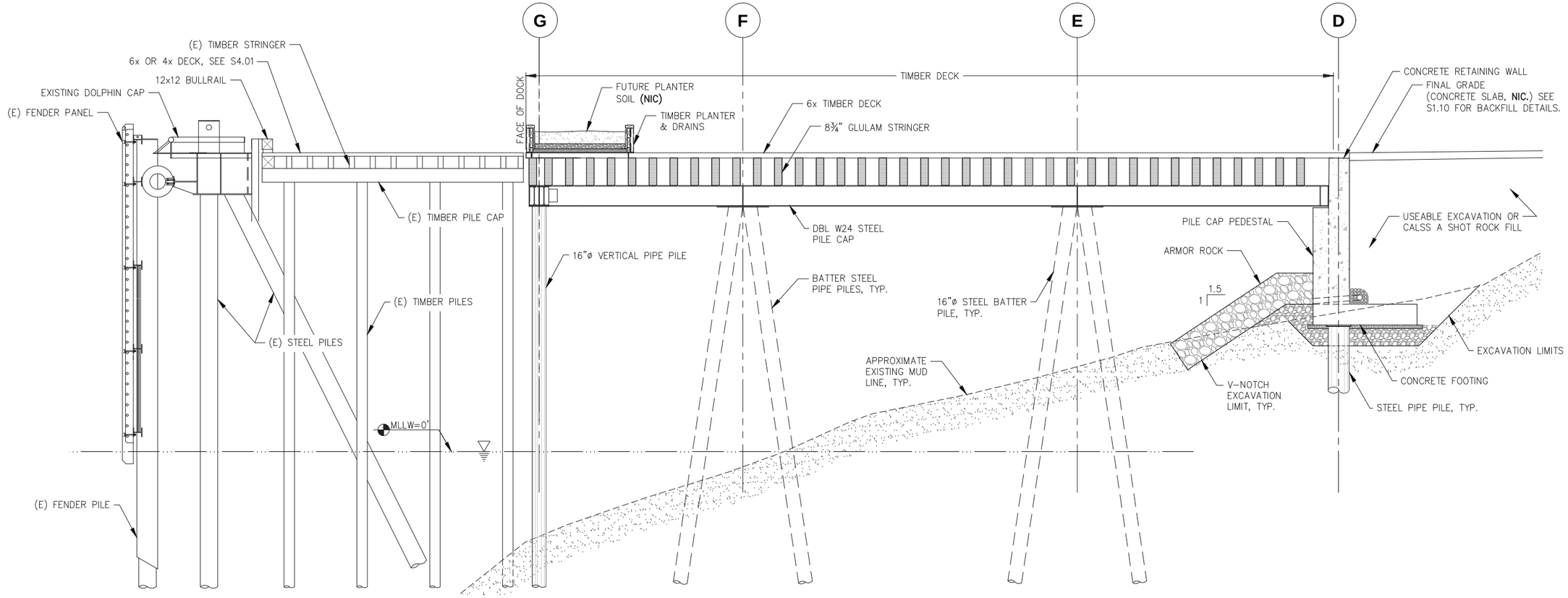

A / S3.01 TIMBER DECK SECTION AT GRID 10

REVISIONS

REV.	DATE	DESCRIPTION	DWN.	CKD.	APP.

P N D ENGINEERS, INC.
9360 Glacier Highway Ste 100
Juneau, Alaska 99801
Phone: 907-586-2093
Fax: 907-586-2099
www.pndengineers.com

DESIGN: MDS CHECKED: CRS
DRAWN: KLL APPROVED: CRS
SCALE: SCALE IN FEET 0 5 10 FT.

STATE OF ALASKA 49TH Charles R. Somerville CE-8845 REGISTERED PROFESSIONAL ENGINEER
DATE: 5/23/2019

DOWNTOWN WATERFRONT IMPROVEMENTS PHASE I
CBJ CONTRACT NO. DH19-014

SHEET TITLE: **TIMBER DECK SECTION**

S3.02

PND PROJECT NO.: 182045 C.A.N. NO.: AECC250

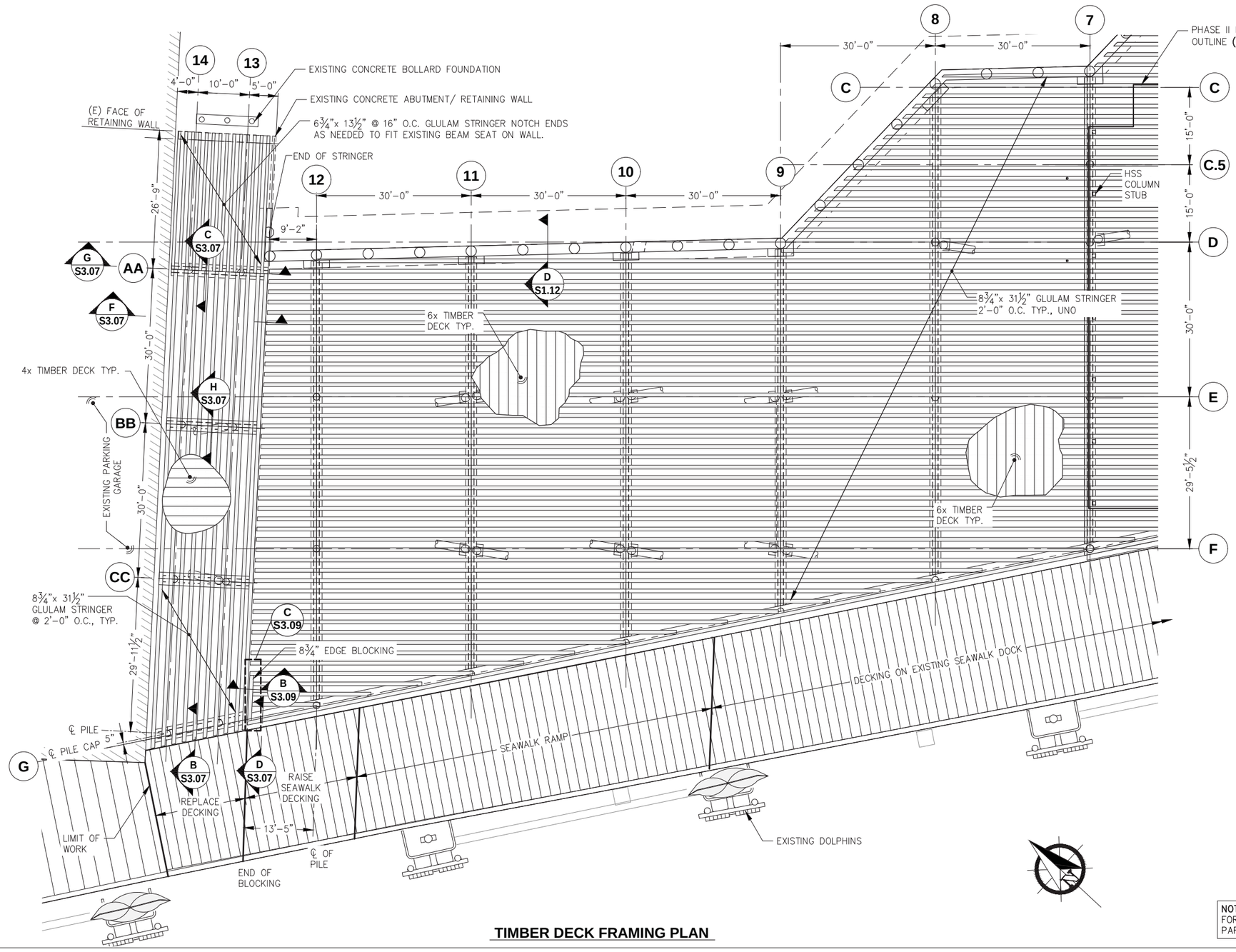

TIMBER DECK FRAMING PLAN

NOTE: OVER FRAMING NOT SHOWN THIS SHEET FOR CLARITY, SEE S3.04 FOR OVER FRAMING PARTIAL PLAN

CITY & BOROUGH OF JUNEAU DOCKS & HARBORS

REVISIONS

REV.	DATE	DESCRIPTION	DWN.	CKD.	APP.

PND ENGINEERS, INC.
9360 Glacier Highway Ste 100
Juneau, Alaska 99801
Phone: 907-586-2093
Fax: 907-586-2099
www.pndengineers.com

DESIGN: MDS CHECKED: CRS
DRAWN: KLL APPROVED: CRS
SCALE: SCALE IN FEET 0 10 20 FT.

STATE OF ALASKA 49TH Charles R. Somerville CE-8845 REGISTERED PROFESSIONAL ENGINEER
DATE: 5/23/2019

DOWNTOWN WATERFRONT IMPROVEMENTS PHASE I
CBJ CONTRACT NO. DH19-014

SHEET TITLE: **TIMBER DECK FRAMING PLAN**

PND PROJECT NO.: 182045 C.A.N. NO.: AECC250

S3.03

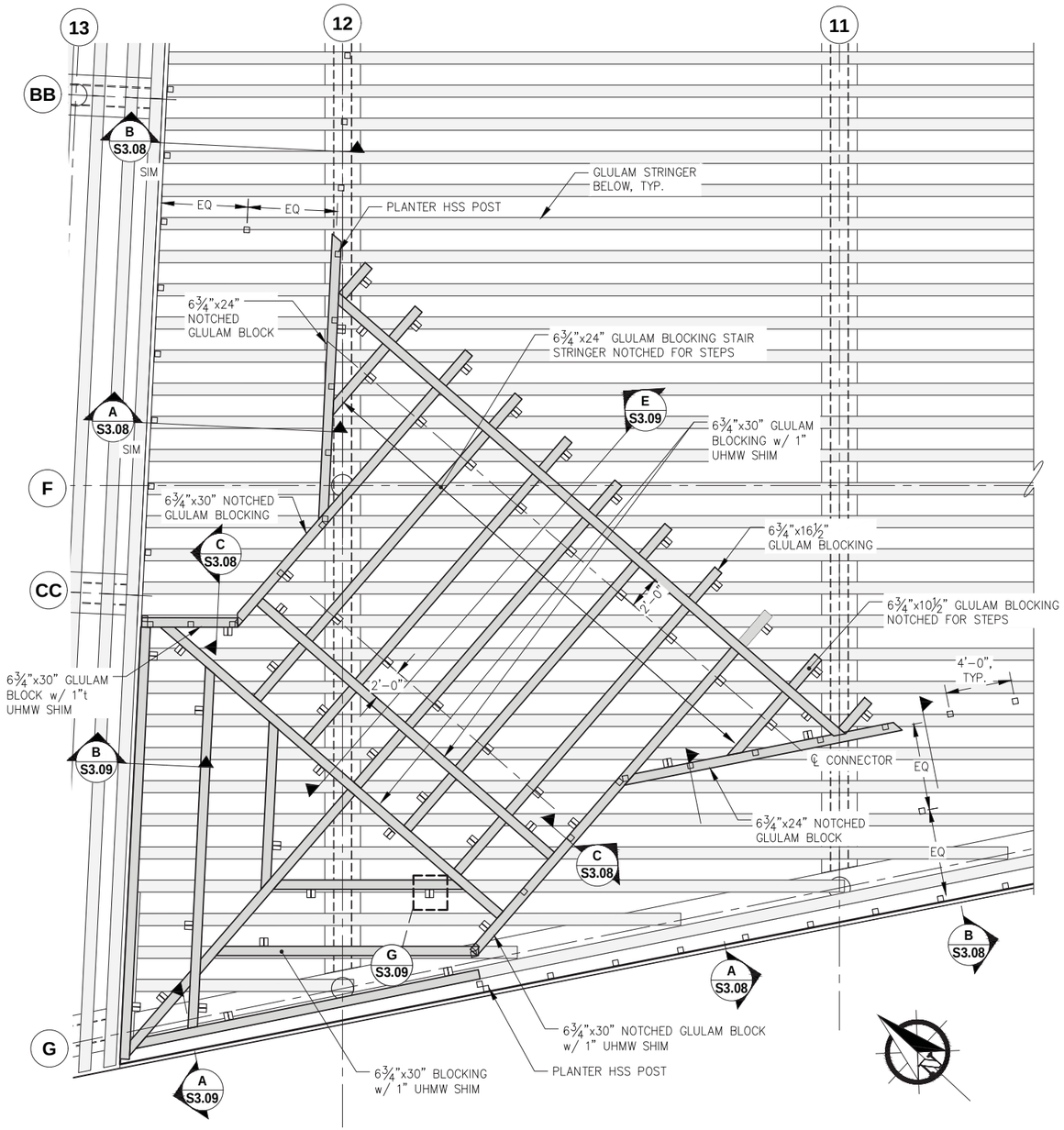

1 S3.01 **TIMBER DECK OVER FRAMING PLAN**

NOTE: ◫ INDICATES OVER FRAME CONNECTION BRACKET LOCATION
MEMBERS LESS THAN 4' LONG ONLY REQUIRE (1) CONNECTION BRACKET @ CENTER

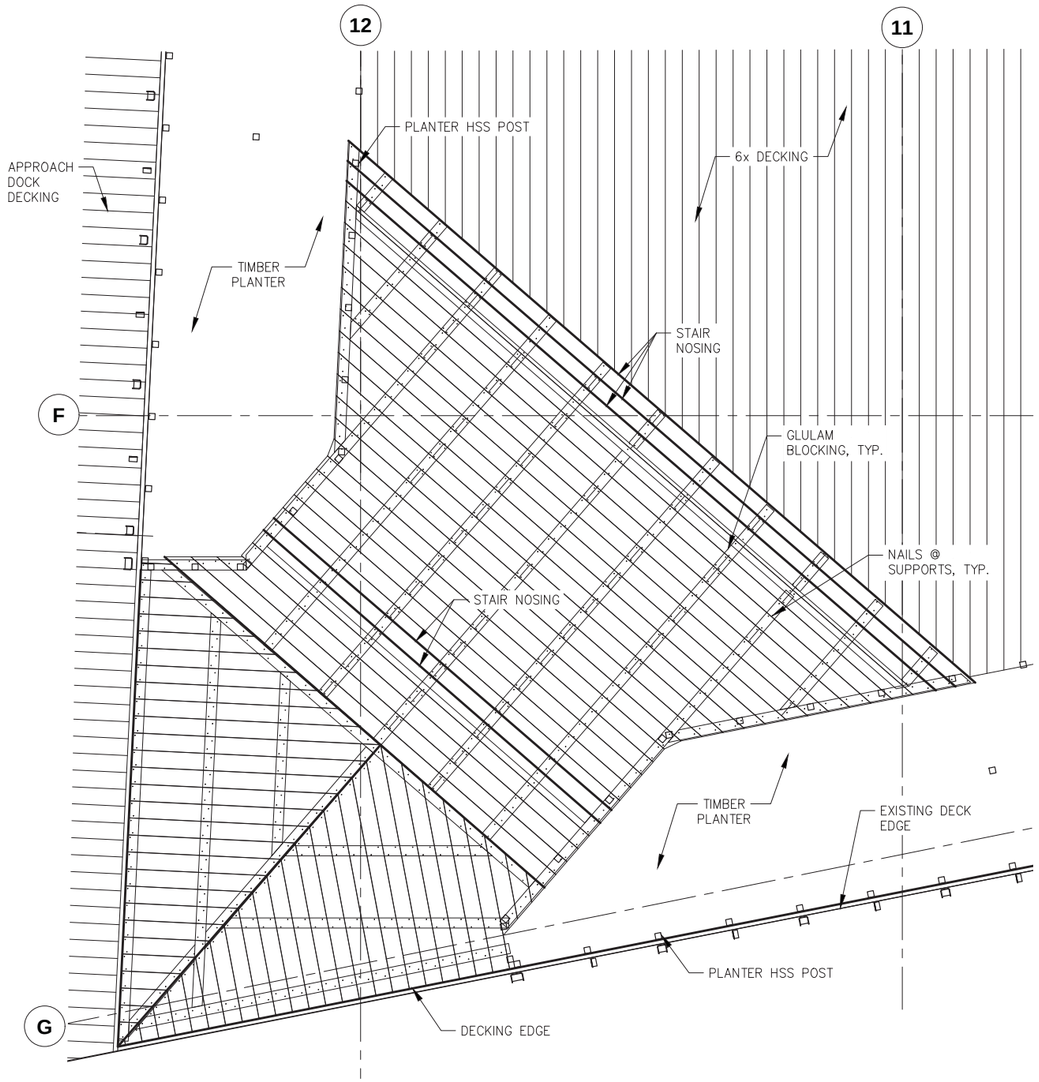

2 - **TIMBER DECKING PLAN**

NOTE: OVER FRAMING DECKING IS 4x TIMBER

CITY & BOROUGH OF JUNEAU — DOCKS & HARBORS

REVISIONS

REV.	DATE	DESCRIPTION	DWN.	CKD.	APP.

P N D ENGINEERS, INC.
9360 Glacier Highway Ste 100
Juneau, Alaska 99801
Phone: 907-586-2093
Fax: 907-586-2099
www.pndengineers.com

DESIGN: MDS CHECKED: CRS
DRAWN: KLL APPROVED: CRS
SCALE: SCALE IN FEET 0 10 20 FT.

STATE OF ALASKA 49TH — Charles R. Somerville CE-8845 REGISTERED PROFESSIONAL ENGINEER
DATE: 5/23/2019

DOWNTOWN WATERFRONT IMPROVEMENTS PHASE I
CBJ CONTRACT NO. DH19-014

SHEET TITLE: **TIMBER DECK OVER FRAMING**

PND PROJECT NO.: 182045 C.A.N. NO.: AECC250

S3.04

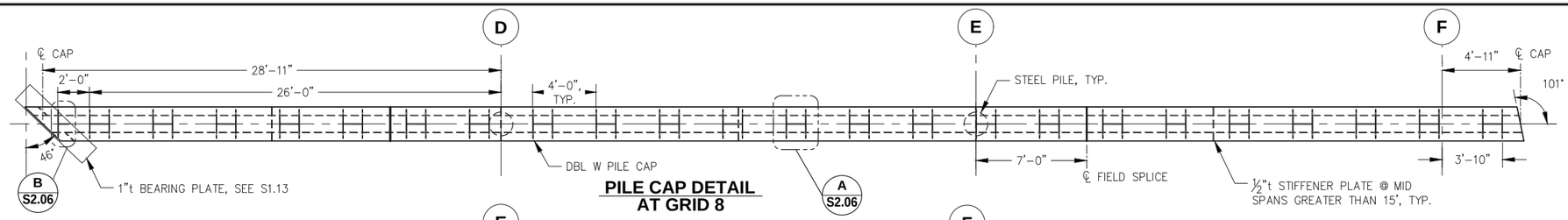

PILE CAP DETAIL AT GRID 8

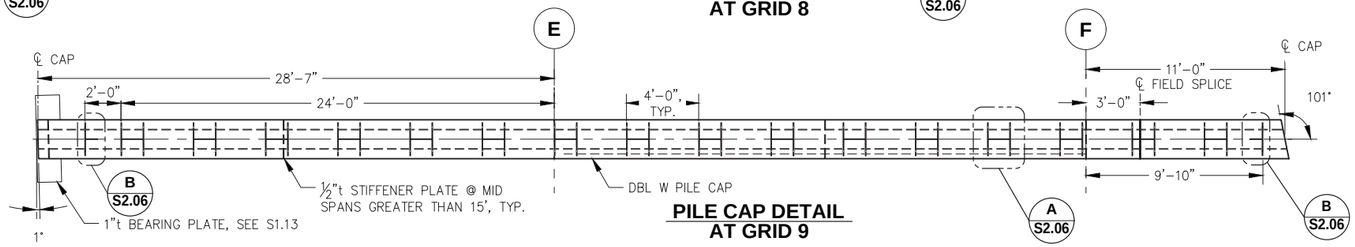

PILE CAP DETAIL AT GRID 9

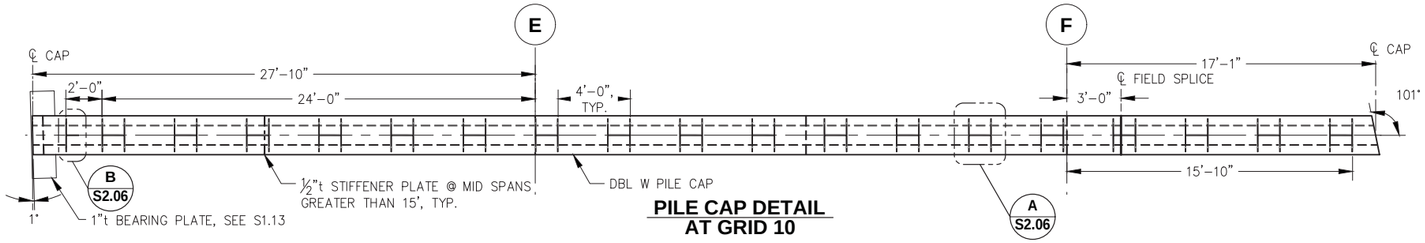

PILE CAP DETAIL AT GRID 10

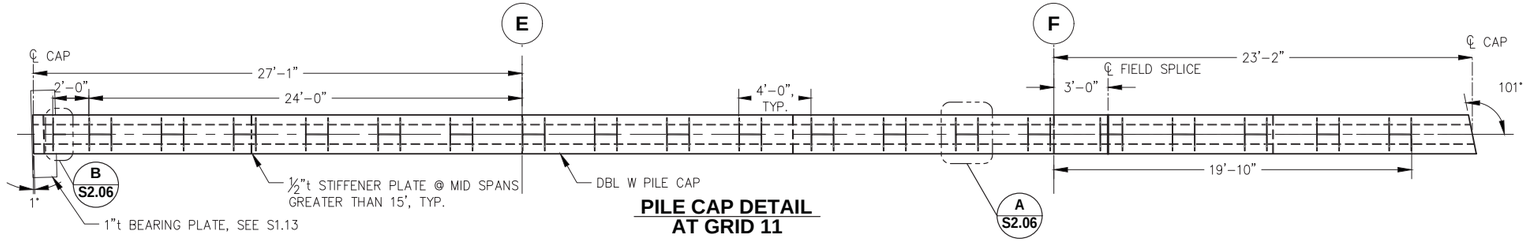

PILE CAP DETAIL AT GRID 11

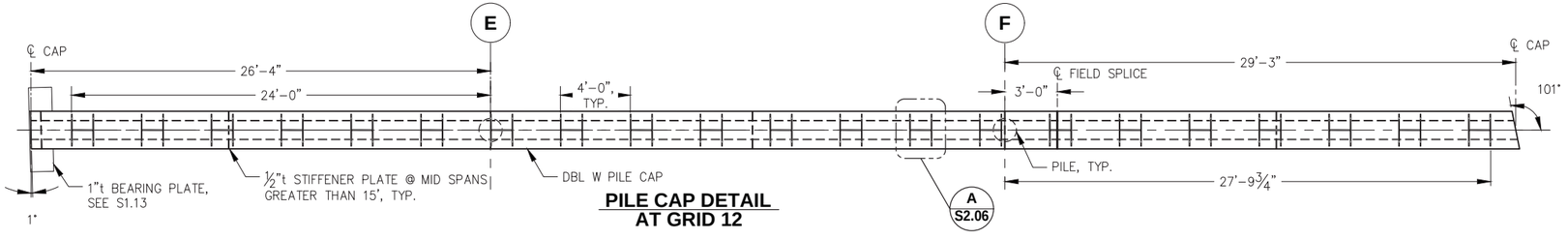

PILE CAP DETAIL AT GRID 12

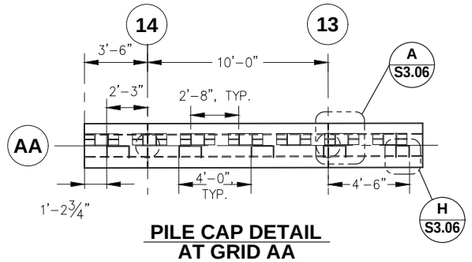

PILE CAP DETAIL AT GRID AA

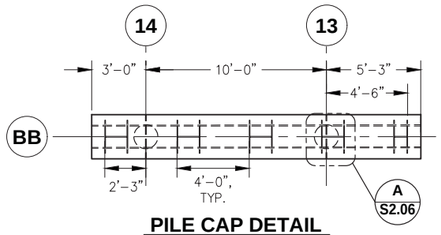

PILE CAP DETAIL AT GRID BB

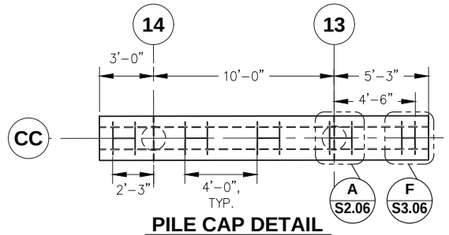

PILE CAP DETAIL AT GRID CC

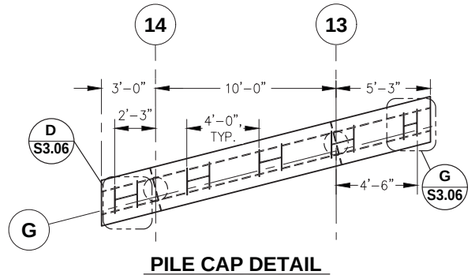

PILE CAP DETAIL AT GRID G

NOTE:
1. SHOP SPLICE AS REQUIRED FOR SECTIONS TO FIT IN GALVANIZING TANKS.
2. ALL PLATE DIMENSIONS ARE TO THE OUTSIDE OF SIDE PLATE, UNLESS NOTED OTHERWISE
3. ALL PILE CAPS ARE DBL W24x131, UNLESS OTHERWISE NOTED
4. ONE STIFFENER PLATE SHALL BE LOCATED AT ℄ EACH PILE, AND ONE PLATE AT MIDSPAN BETWEEN PILES AT PILE SPACING GREATER THAN 15' O.C.

REVISIONS

REV.	DATE	DESCRIPTION	DWN.	CKD.	APP.

P N D ENGINEERS, INC.
9360 Glacier Highway Ste 100
Juneau, Alaska 99801
Phone: 907-586-2093
Fax: 907-586-2099
www.pndengineers.com

DESIGN: MDS CHECKED: CRS
DRAWN: KLL APPROVED: CRS
SCALE: SCALE IN FEET 0 10 20 FT.
DATE: 5/23/2019

STATE OF ALASKA 49TH Charles R. Somerville CE-8845 REGISTERED PROFESSIONAL ENGINEER

DOWNTOWN WATERFRONT IMPROVEMENTS
PHASE I
CBJ CONTRACT NO. DH19-014

SHEET TITLE: **PILE CAP PLAN**

S3.05

PND PROJECT NO.: 182045 C.A.N. NO.: AECC250

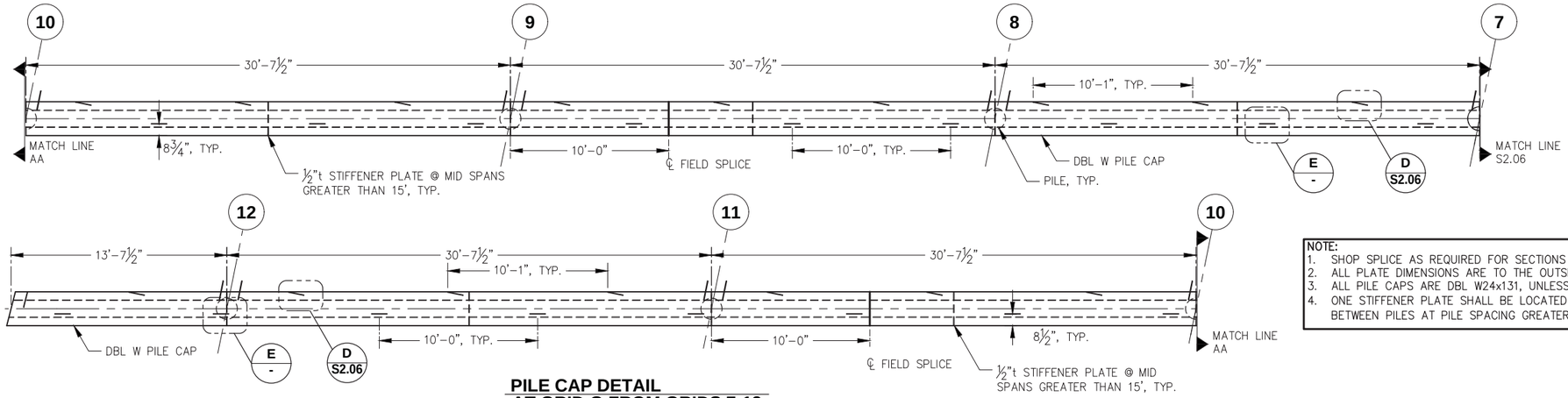

PILE CAP DETAIL
AT GRID G FROM GRIDS 7-12

NOTE:
1. SHOP SPLICE AS REQUIRED FOR SECTIONS TO FIT IN GALVANIZING TANKS.
2. ALL PLATE DIMENSIONS ARE TO THE OUTSIDE OF SIDE PLATE, UNLESS NOTED OTHERWISE
3. ALL PILE CAPS ARE DBL W24x131, UNLESS OTHERWISE NOTED
4. ONE STIFFENER PLATE SHALL BE LOCATED AT ℄ EACH PILE, AND ONE PLATE AT MIDSPAN BETWEEN PILES AT PILE SPACING GREATER THAN 15' O.C.

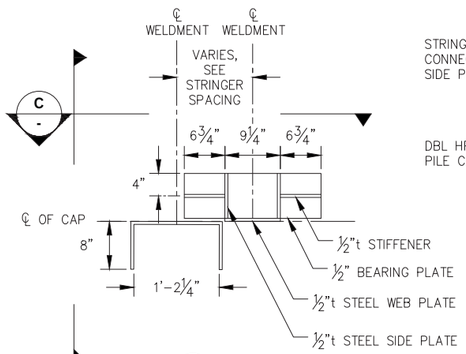

A - **GRID AA PLAN**

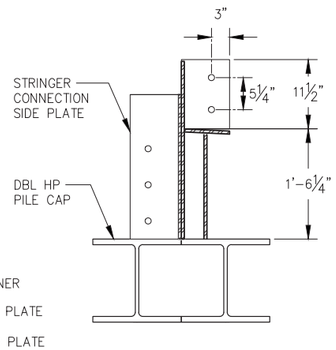

B - **GRID AA CAP SECTION**

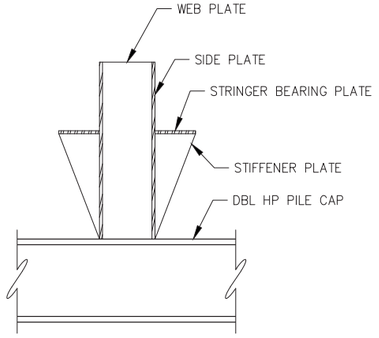

C - **GRID AA CAP ELEVATION**

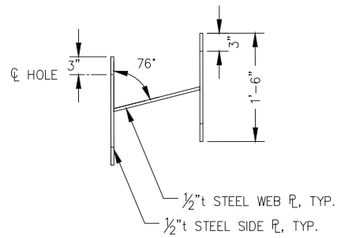

D - **STRINGER CONNECTION**

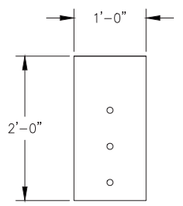

E - **BLOCKING CONNECTION PLATE**

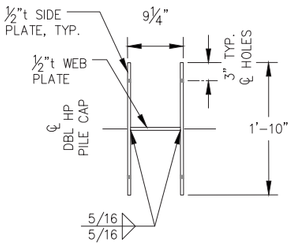

F - **STRINGER CONNECTION**

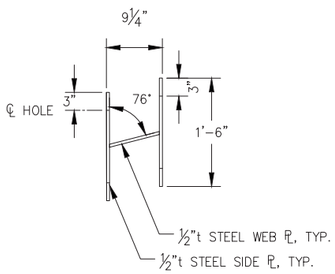

G - **STRINGER CONNECTION**

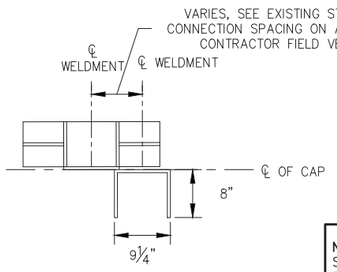

H - **STRINGER CONNECTION**

NOTE:
SEE DETAIL A - FOR DETAILS NOT CALLED OUT

REVISIONS

REV.	DATE	DESCRIPTION	DWN.	CKD.	APP.

PND ENGINEERS, INC.
9360 Glacier Highway Ste 100
Juneau, Alaska 99801
Phone: 907-586-2093
Fax: 907-586-2099
www.pndengineers.com

DESIGN: MDS CHECKED: CRS
DRAWN: KLL APPROVED: CRS
SCALE: SCALE IN FEET 0 10 20 FT.
DATE: 5/23/2019

STATE OF ALASKA 49TH — Charles R. Somerville CE-8845 — REGISTERED PROFESSIONAL ENGINEER

DOWNTOWN WATERFRONT IMPROVEMENTS
PHASE I
CBJ CONTRACT NO. DH19-014

SHEET TITLE: **PILE CAP PLAN**

S3.06

PND PROJECT NO.: 182045 C.A.N. NO.: AECC250

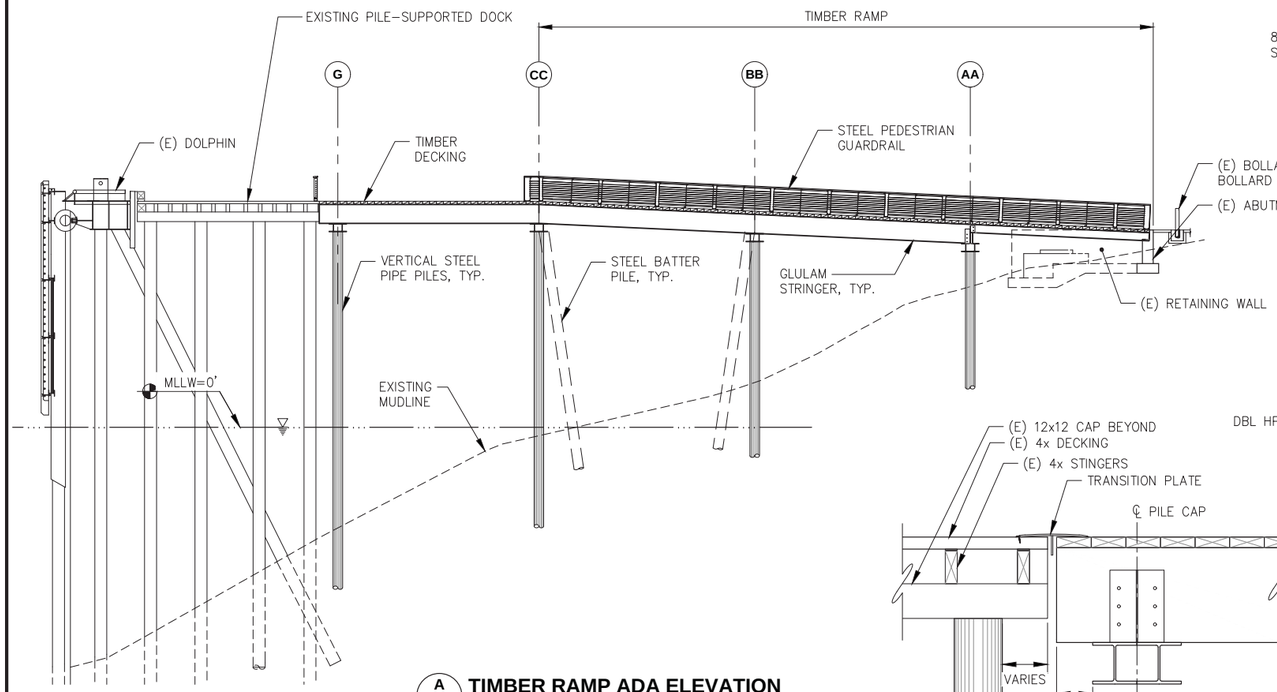

A S3.01 TIMBER RAMP ADA ELEVATION

B S3.03 DOCK SECTION AT RAMP AND SEAWALK, TYP.

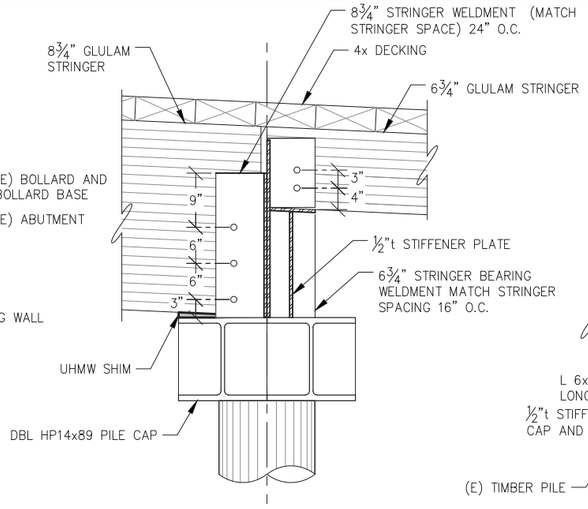

C - RAMP PILE CAP DETAIL AT STRINGER CHANGE

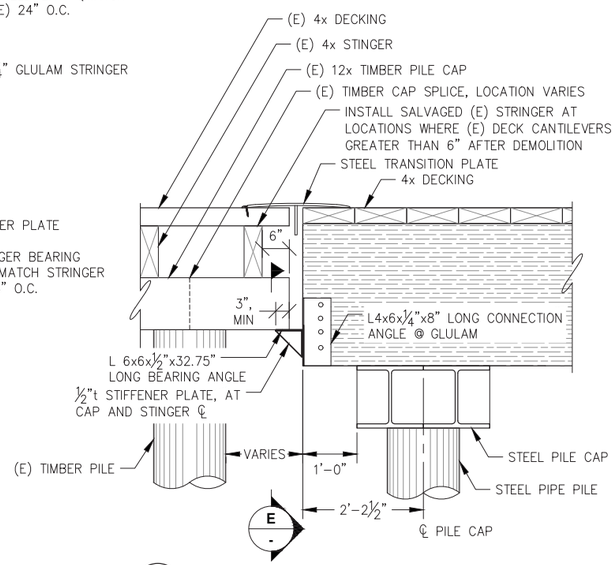

D S3.03 APPROACH DOCK CONNECTION TO EXISTING PILE CAP DETAIL
(3) REQUIRED, LOCATE AT EACH EXISTING PILE CAP.

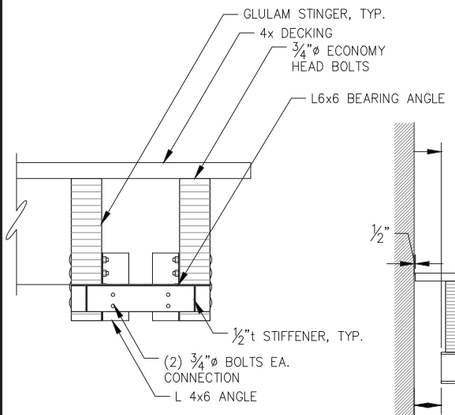

NOTE: LOCATE ANGLE FOR FULL BEARING OF EXITING PILE CAP ADJUST VERTICALLY AND HORIZONTALLY AS NEEDED.

E - APPROACH DOCK CONNECTION TO EXISTING DETAIL

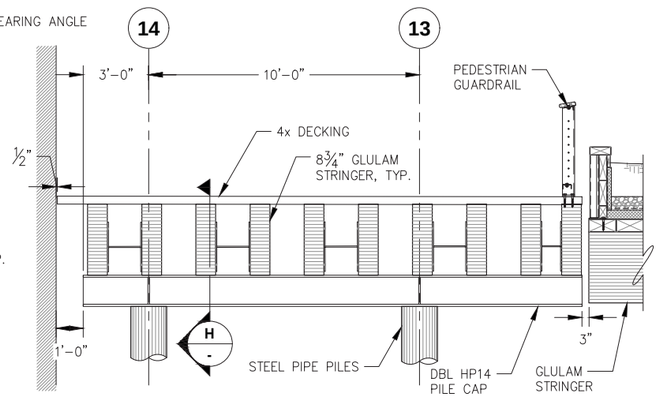

F S3.03 RAMP SECTION AT 8 3/4" GLULAM BEAM

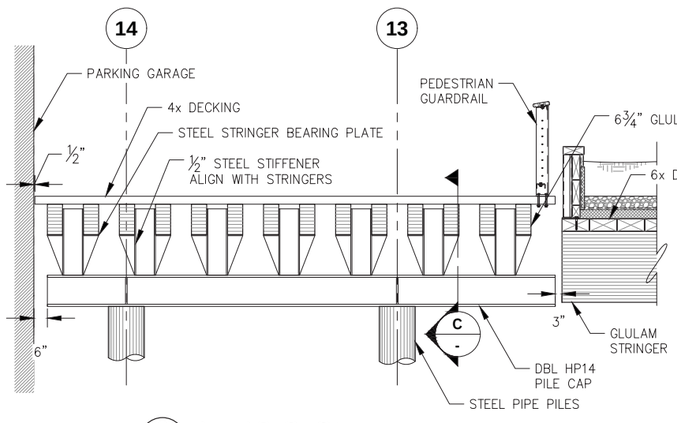

G S3.03 RAMP SECTION AT 6 3/4" GLULAM BEAM

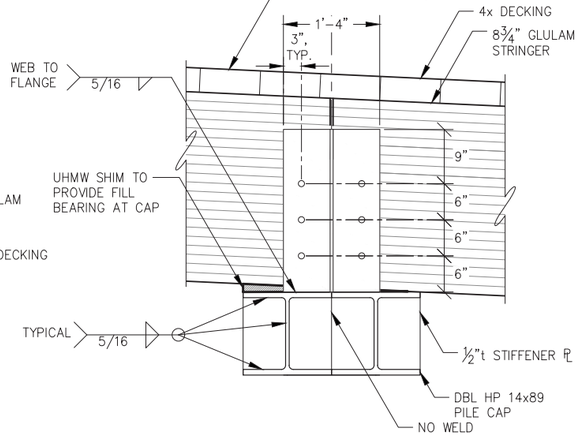

H S3.03 TYPICAL RAMP PILE CAP SECTION

REVISIONS

REV.	DATE	DESCRIPTION	DWN.	CKD.	APP.

CITY & BOROUGH OF JUNEAU — DOCKS & HARBORS

P N D ENGINEERS, INC.
9360 Glacier Highway Ste 100
Juneau, Alaska 99801
Phone: 907-586-2093
Fax: 907-586-2099
www.pndengineers.com

DESIGN: MDS CHECKED: CRS
DRAWN: KLL APPROVED: CRS
SCALE: SCALE IN FEET 0 10 20 FT.

STATE OF ALASKA 49TH — Charles R. Somerville CE-8845 REGISTERED PROFESSIONAL ENGINEER
DATE: 5/23/2019

DOWNTOWN WATERFRONT IMPROVEMENTS PHASE I
CBJ CONTRACT NO. DH19-014

SHEET TITLE: **ADA APPROACH RAMP ELEVATION AND SECTION**

PND PROJECT NO.: 182045 C.A.N. NO.: AECC250

S3.07

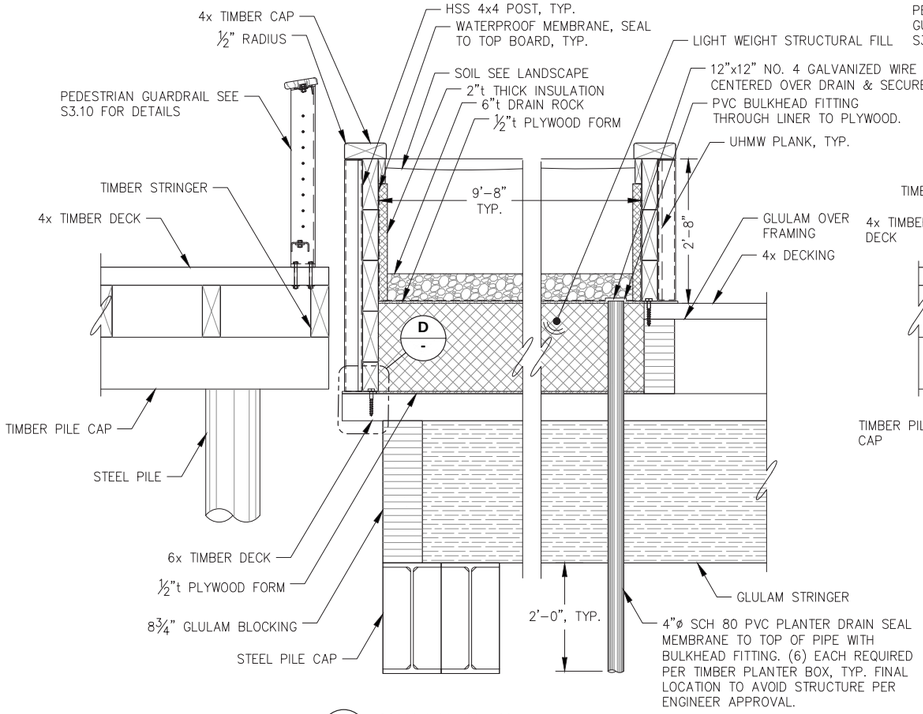

A S3.04 **DOCK SECTION AT WITH LIGHT WEIGHT FILL**

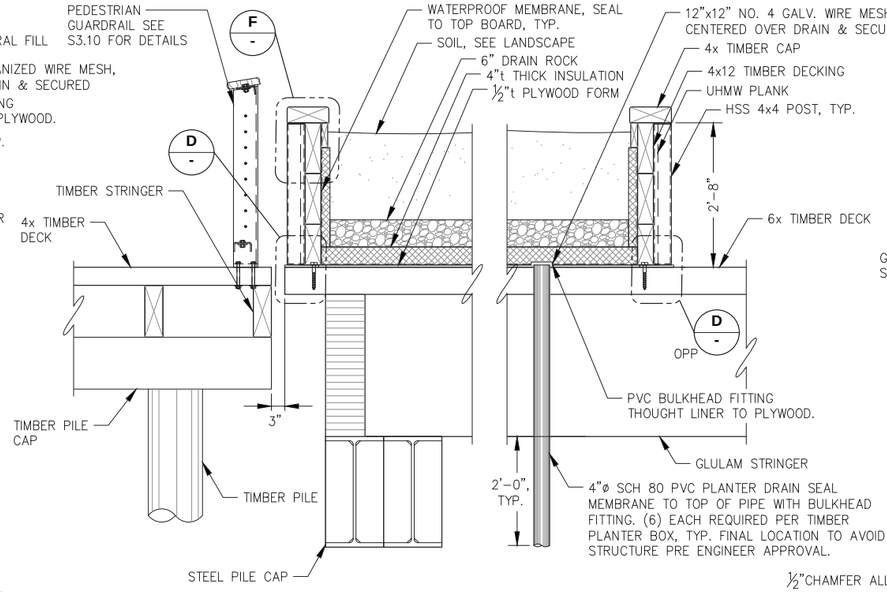

B S3.04 **DOCK SECTION AT SEA WALK RAMP**

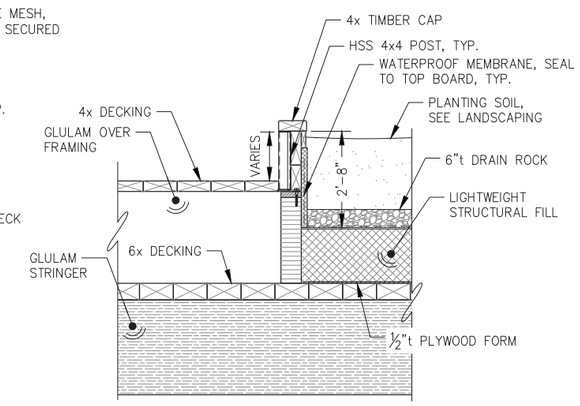

C S3.04 **PLANTER SECTION THROUGH OVER FRAMING**

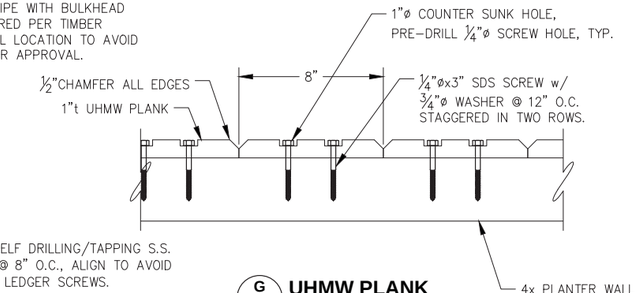

G - **UHMW PLANK SECTION**

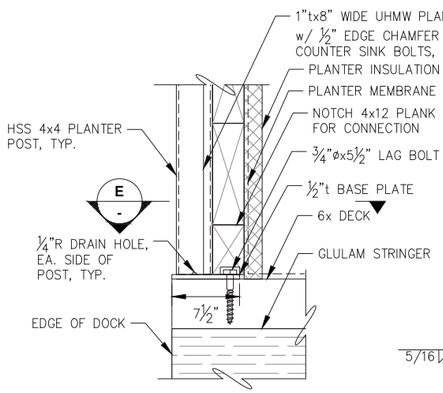

D - **PLANTER POST CONNECTION**

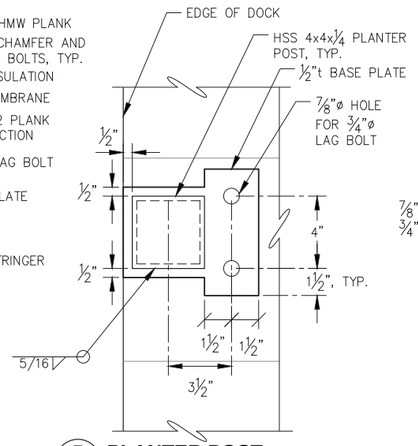

E - **PLANTER POST BASE PLATE DETAIL**

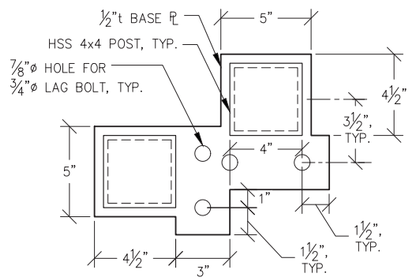

G - **PLANTER POST BASE PLATE AT CORNER**

NOTE: PLANTER WALL NOT SHOWN FOR CLARITY

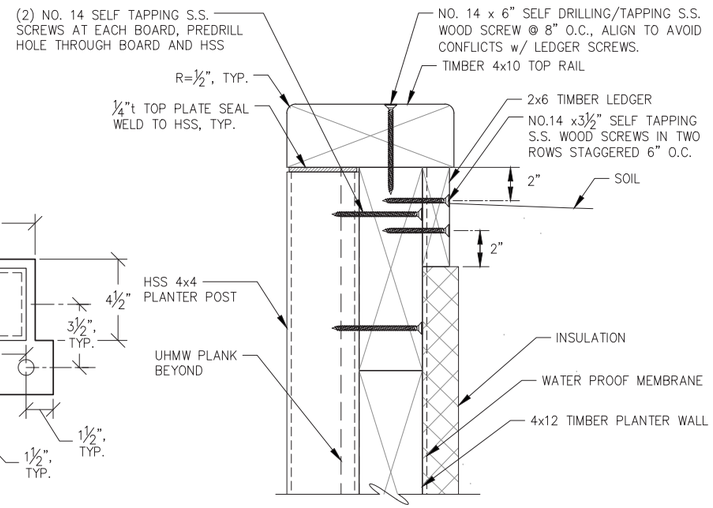

F - **TOP OF PLANTER WALL DETAIL**

REVISIONS

REV.	DATE	DESCRIPTION	DWN.	CKD.	APP.

PND ENGINEERS, INC.
9360 Glacier Highway Ste 100
Juneau, Alaska 99801
Phone: 907-586-2093
Fax: 907-586-2099
www.pndengineers.com

DESIGN: MDS CHECKED: CRS
DRAWN: KLL APPROVED: CRS
SCALE: NTS
DATE: 5/23/2019

STATE OF ALASKA 49 TH Charles R. Somerville CE-8845 REGISTERED PROFESSIONAL ENGINEER

DOWNTOWN WATERFRONT IMPROVEMENTS PHASE I
CBJ CONTRACT NO. DH19-014

SHEET TITLE: **TIMBER DECK SECTIONS AND DETAILS**

PND PROJECT NO.: 182045 C.A.N. NO.: AECC250

S3.08

Attachment G – BLD2019-0321

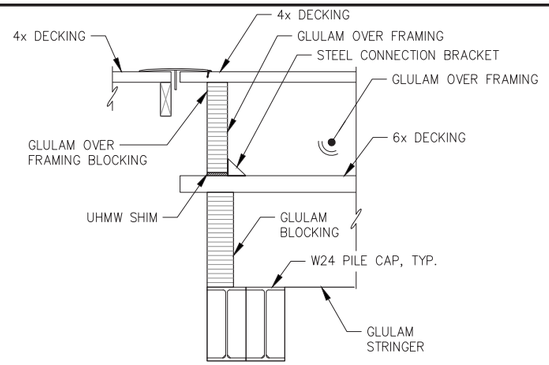

A S3.04 **OVER FRAMING SECTION AT SEAWALK**

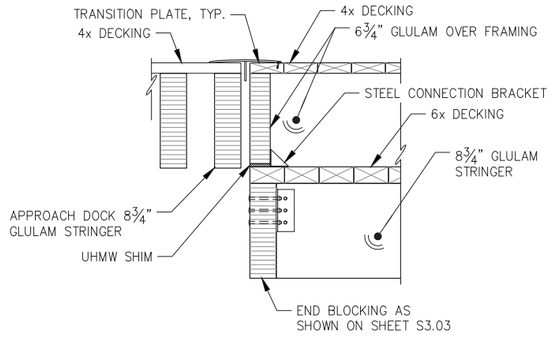

B S3.04 **OVERFRAMING SECTION AT APPROACH RAMP**

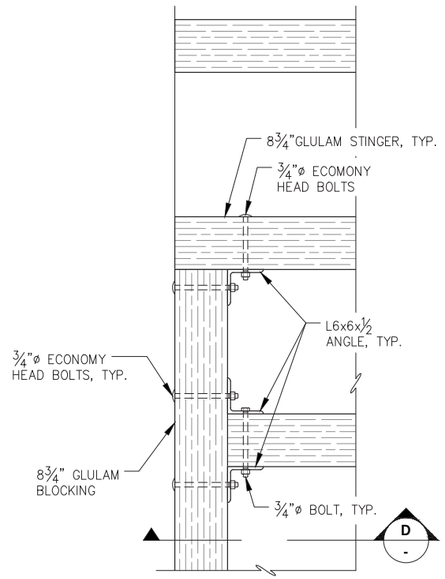

C S3.04 **EDGE BLOCKING CONNECTION SECTION**

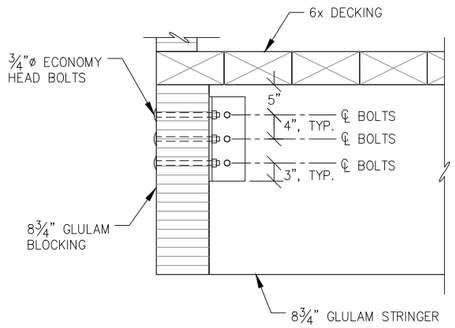

D - **EDGE BLOCKING CONNECTION PLAN**

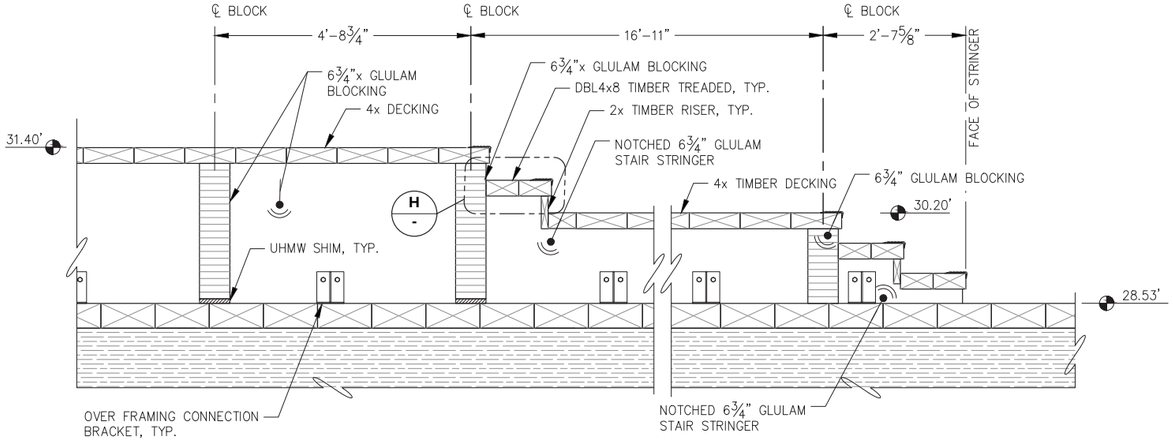

E S3.04 **OVERFRAMING STAIR SECTION**

NOTE:
1. NOTCH STRINGERS PRIOR TO PRESSURE TREATING TIMBER
2. PROVIDE UHMW SHIMS AS REQUIRED TO MATCH (E) DECK ELEVATIONS.

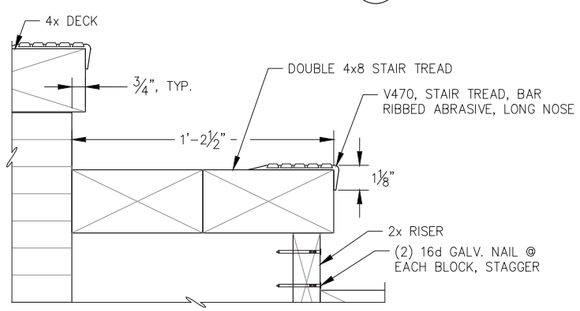

H - **STAIR NOSING DETAIL**

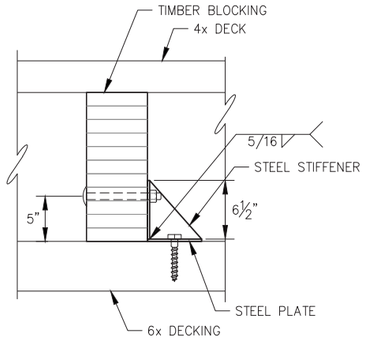

F - **TYPICAL OVER FRAMING CONNECTION SECTION**

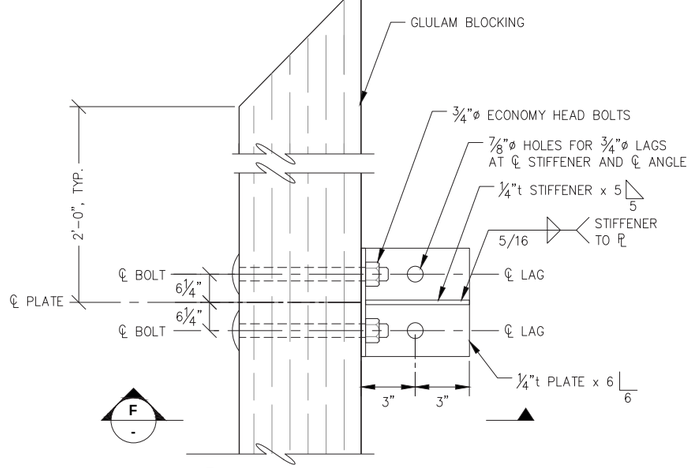

G S3.04 **TYPICAL OVER FRAMING CONNECTION PLAN**

REVISIONS

REV.	DATE	DESCRIPTION	DWN.	CKD.	APP.

P N D ENGINEERS, INC.
9360 Glacier Highway Ste 100
Juneau, Alaska 99801
Phone: 907-586-2093
Fax: 907-586-2099
www.pndengineers.com

DESIGN: MDS CHECKED: CRS
DRAWN: KLL APPROVED: CRS
SCALE: NTS
DATE: 5/23/2019

STATE OF ALASKA 49TH Charles R. Somerville CE-8845 REGISTERED PROFESSIONAL ENGINEER

DOWNTOWN WATERFRONT IMPROVEMENTS PHASE I
CBJ CONTRACT NO. DH19-014

SHEET TITLE: **TIMBER OVER FRAMING DETAILS**

PND PROJECT NO.: 182045 C.A.N. NO.: AECC250

S3.09

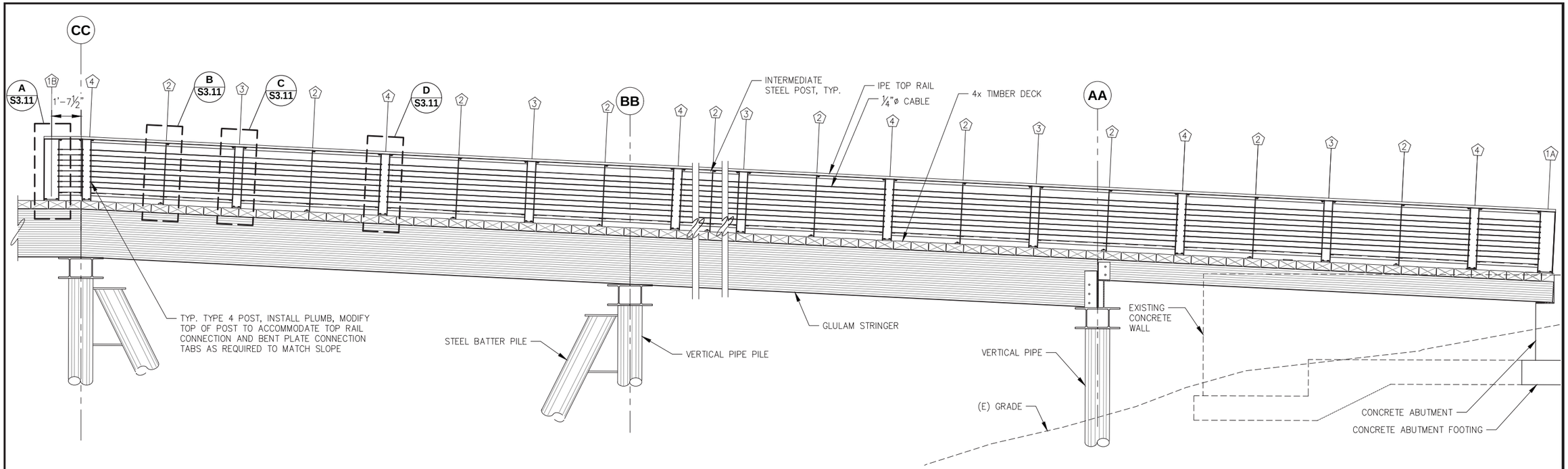

A S3.01 ADA APPROACH RAMP PEDESTRIAN GUARDRAIL ELEVATION

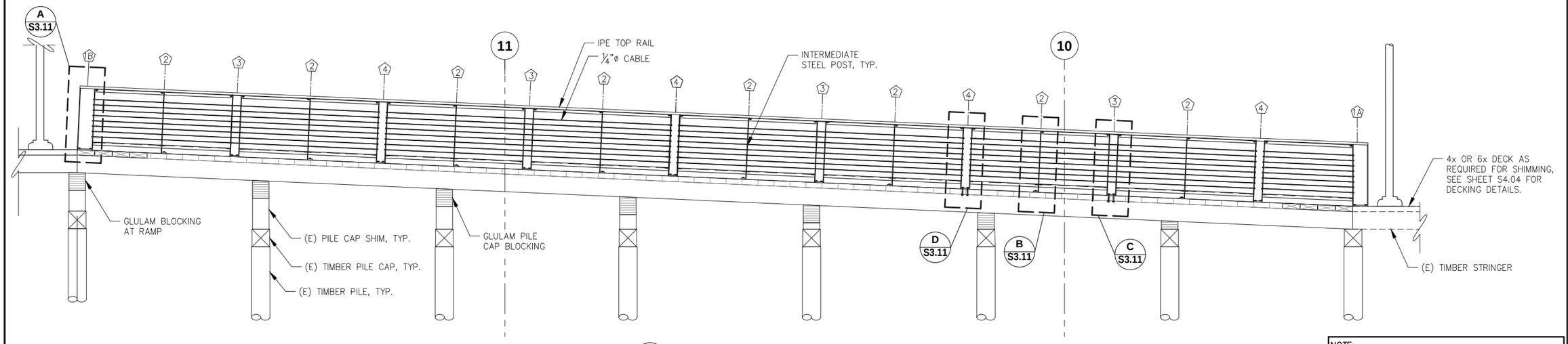

B S3.01 SEAWALK RAMP PEDESTRIAN GUARDRAIL ELEVATION

NOTE:
1. (#) INDICATES STEEL POST TYPE. SEE SHEET S3.11 FOR POST DETAILS

REVISIONS

REV.	DATE	DESCRIPTION	DWN.	CKD.	APP.

PND ENGINEERS, INC.
9360 Glacier Highway Ste 100
Juneau, Alaska 99801
Phone: 907-586-2093
Fax: 907-586-2099
www.pndengineers.com

DESIGN: MDS CHECKED: CRS
DRAWN: KLL APPROVED: CRS
SCALE: SCALE IN FEET 0 10 20 FT.

STATE OF ALASKA 49TH Charles R. Somerville CE-8845 REGISTERED PROFESSIONAL ENGINEER
DATE: 5/23/2019

DOWNTOWN WATERFRONT IMPROVEMENTS PHASE I
CBJ CONTRACT NO. DH19-014

SHEET TITLE: **PEDESTRIAN GUARDRAIL ELEVATION**

PND PROJECT NO.: 182045 C.A.N. NO.: AECC250

S3.10

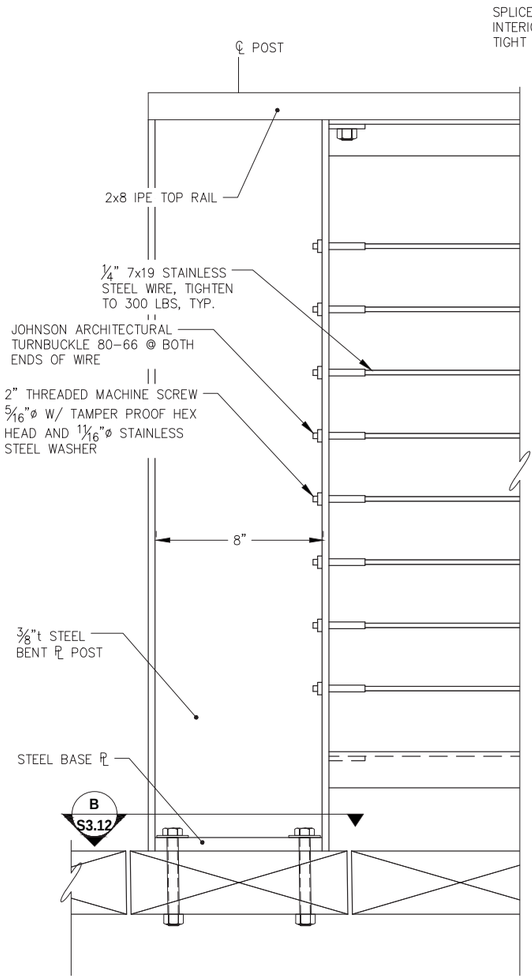

A - POST TYPE 1B 1A (OPP HAND) ELEVATION

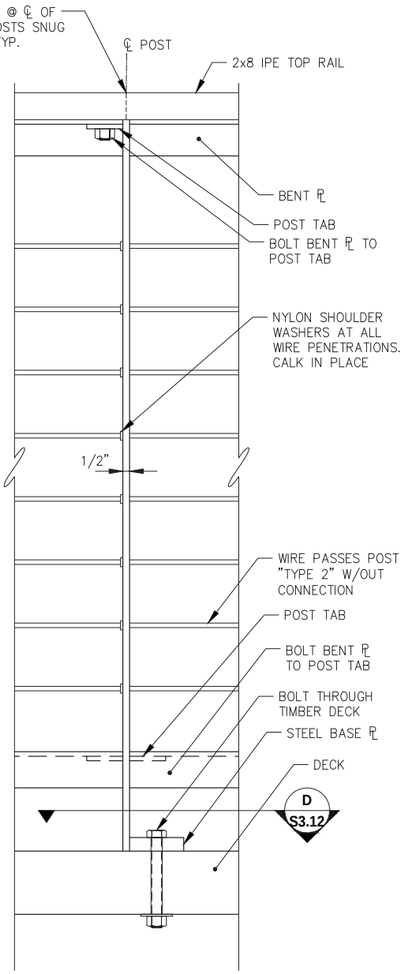

B - POST TYPE 2 ELEVATION

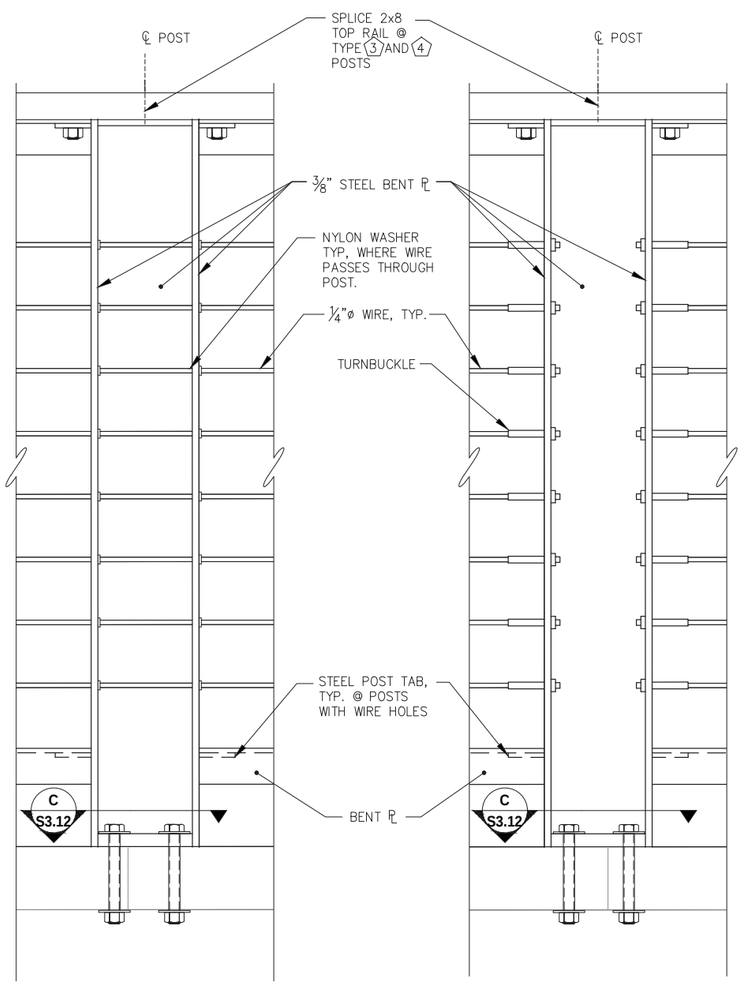

C - POST TYPE 3 ELEVATION

D - POST TYPE 4 ELEVATION

TYPE	TAB & HOLE LOCATIONS	NOTES
1A	RIGHT SIDE ONLY	CABLE PENETRATE RIGHT SIDE WITH TURNBUCKLES, SEE A/–
1B	LEFT SIDE ONLY	CABLE PENETRATE LEFT SIDE WITH TURNBUCKLES, SEE A/– SIM
2	BOTH SIDES	CABLE PENETRATE BOTH SIDE NO TURNBUCKLES, SEE DETAIL B/–
3	BOTH SIDES	CABLE PENETRATE BOTH SIDE NO TURNBUCKLES, SEE DETAIL C/–
4	BOTH SIDES	CABLE PENETRATE AND TURNBUCKLES BOTH SIDE, SEE DETAIL D/–

GUARD RAIL NOTES:

1. INSTALL POST PERPENDICULAR TO DECK, TOP RAIL, FOOTRAIL, AND CABLES TO FOLLOW DECK SLOPE.
2. HOT DIP GALVANIZE ENTIRE POST AND ALL METAL RAILING ASSEMBLIES AFTER FABRICATION. ALL WELDS TO BE GROUND SMOOTH AND ALL METAL EDGES DEBURRED AND LIGHTLY ROUNDED PRIOR TO GALVANIZING.
3. PROVIDE NYLON WASHERS AT ALL CABLE PENETRATIONS. CAULK SHOULDER WASHERS IN PLACE AT PENETRATIONS. PROVIDE NYLON SHOULDER WASHERS AND NYLON WASHERS UNDER TURNBUCKLE AND TERMINATION CONNECTIONS.
4. CUT TOP RAIL, BENT PLATES, AND WIRE TO FIT POST SPACING DETERMINED IN THE FIELD. FIELD TREAT ANY TIMBER FIELD CUT WITH AN APPROVED WOOD PRESERVATIVE TREATMENT. FIELD GALVANIZE ALL CUT OR FIELD WELDED MEMBERS WITH APPROVED GALVANIZING TECHNIQUE.
5. USE 3M 4200 FAST CURE MARINE SEALANT WHERE CAULKING IS CALLED FOR.
6. AT LOCATIONS WHERE EXISTING STRINGER BELOW DECKING PREVENTS THROUGH BOLTING, SUBSTITUTE ⅝"ø x 8" LAG BOLTS

CITY & BOROUGH OF JUNEAU DOCKS & HARBORS

REVISIONS

REV.	DATE	DESCRIPTION	DWN.	CKD.	APP.

PND ENGINEERS, INC.
9360 Glacier Highway Ste 100
Juneau, Alaska 99801
Phone: 907-586-2093
Fax: 907-586-2099
www.pndengineers.com

DESIGN: MDS CHECKED: CRS
DRAWN: KLL APPROVED: CRS
SCALE: SCALE IN FEET 0 10 20 FT.

STATE OF ALASKA 49TH Charles R. Somerville CE-8845 REGISTERED PROFESSIONAL ENGINEER
DATE: 5/23/2019

DOWNTOWN WATERFRONT IMPROVEMENTS PHASE I
CBJ CONTRACT NO. DH19-014

SHEET TITLE: **PEDESTRIAN GUARDRAIL DETAILS**

PND PROJECT NO.: 182045 C.A.N. NO.: AECC250

S3.11

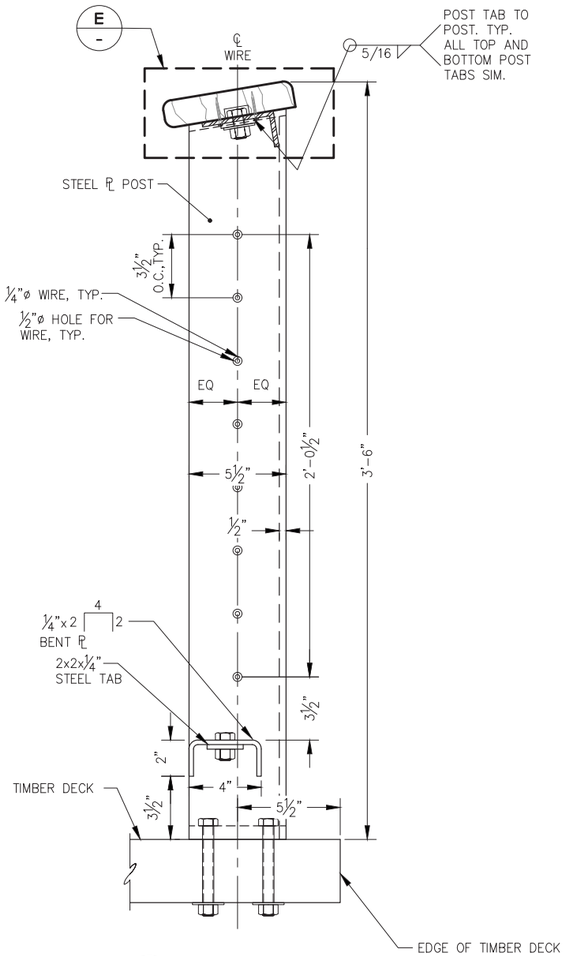

A - TYPICAL POST SECTION

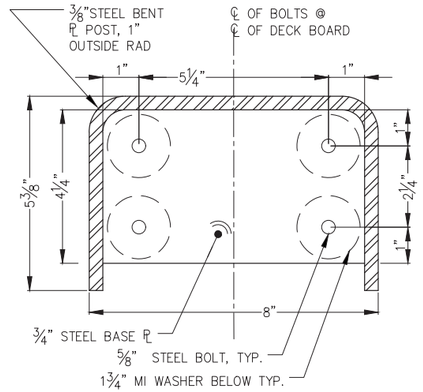

B S3.11 **POST BASE PLATE TYPE** 1A & 1B

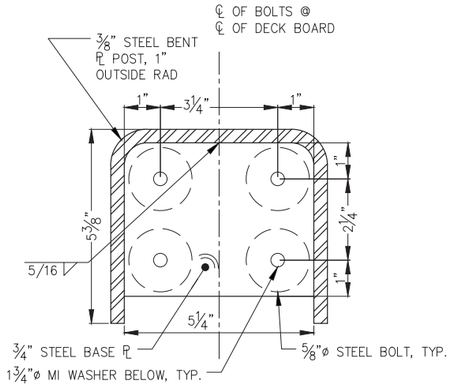

C S3.11 **POST BASE PLATE TYPE** 3, 4, 5A & 5B

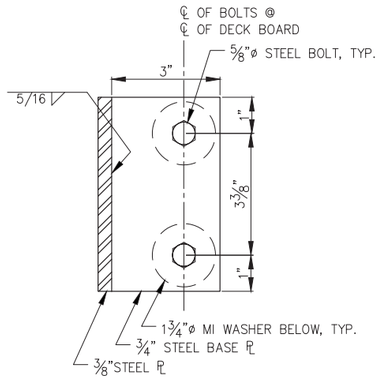

D S3.11 **POST BASE PLATE TYPE** 2

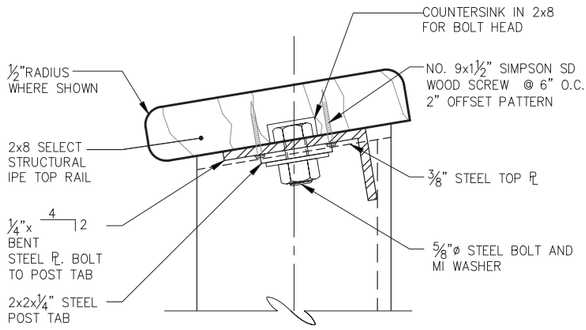

E - **TOP RAIL DETAIL**

REVISIONS

REV.	DATE	DESCRIPTION	DWN.	CKD.	APP.

P N D ENGINEERS, INC.
9360 Glacier Highway Ste 100
Juneau, Alaska 99801
Phone: 907-586-2093
Fax: 907-586-2099
www.pndengineers.com

DESIGN: MDS CHECKED: CRS
DRAWN: KLL APPROVED: CRS
SCALE: SCALE IN FEET 0 10 20 FT.

STATE OF ALASKA 49TH Charles R. Somerville CE-8845 REGISTERED PROFESSIONAL ENGINEER
DATE: 5/23/2019

DOWNTOWN WATERFRONT IMPROVEMENTS PHASE I
CBJ CONTRACT NO. DH19-014

SHEET TITLE: **PEDESTRIAN GUARDRAIL SECTION AND DETAILS**

PND PROJECT NO.: 182045 C.A.N. NO.: AECC250

S3.12

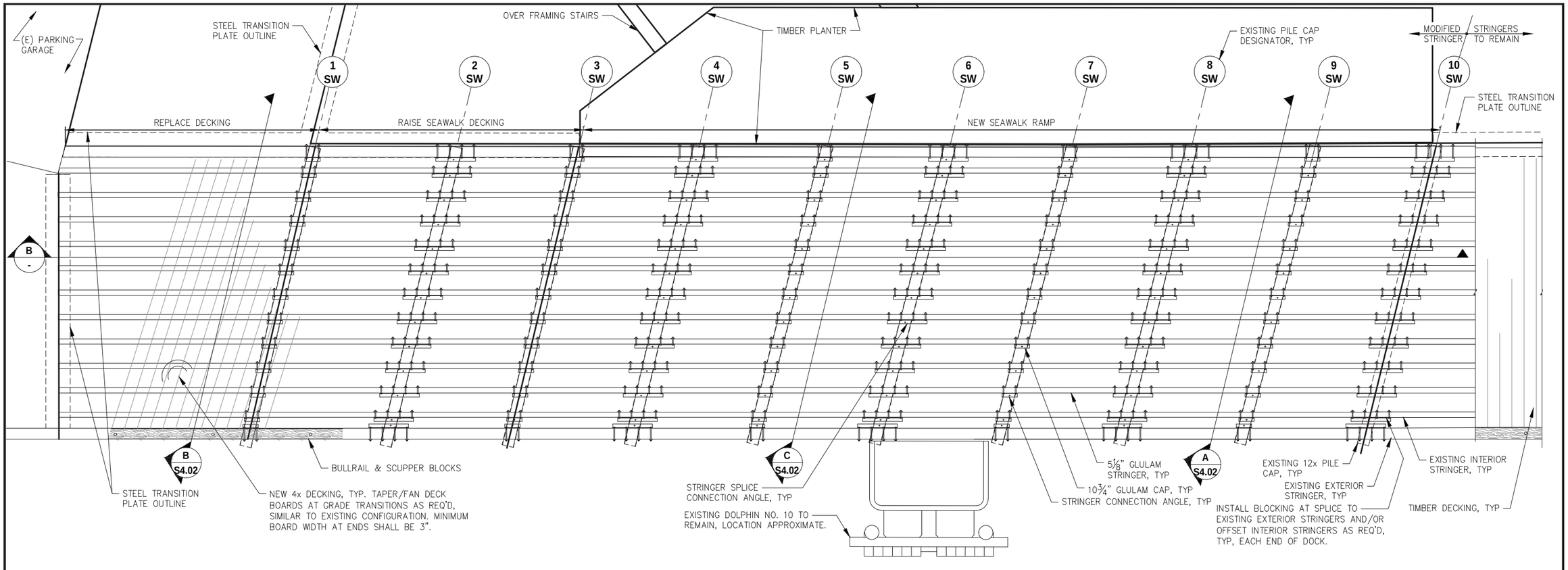

A S3.01 DOCK MODIFICATIONS PLAN

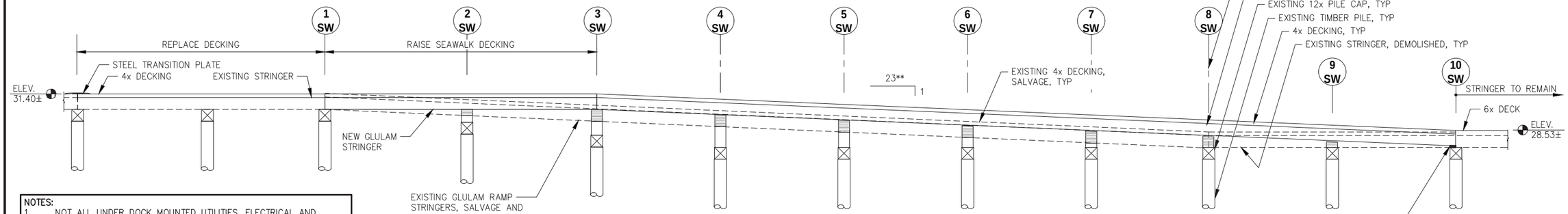

B - DOCK MODIFICATIONS PROFILE

**APPROXIMATE SLOPE
NOTE: NOT ALL REQUIRED COMPONENTS SHOWN THIS VIEW.

NOTES:
1. NOT ALL UNDER DOCK MOUNTED UTILITIES, ELECTRICAL AND APPURTENANCES SHOWN. FIELD CONFIRM ACTUAL SITE CONDITIONS.
2. DOCK ELEVATION APPROXIMATE VERIFY IN FIELD.
3. **APPROXIMATE SLOPE
4. NOT ALL REQUIRED COMPONENTS SHOWN THIS VIEW.

CITY & BOROUGH OF JUNEAU DOCKS & HARBORS

REVISIONS

REV.	DATE	DESCRIPTION	DWN.	CKD.	APP.

PND ENGINEERS, INC.
9360 Glacier Highway Ste 100
Juneau, Alaska 99801
Phone: 907-586-2093
Fax: 907-586-2099
www.pndengineers.com

DESIGN: BMI CHECKED: CRS
DRAWN: BMI APPROVED: CRS
SCALE: NTS

STATE OF ALASKA 49TH — Charles R. Somerville CE-8845 — REGISTERED PROFESSIONAL ENGINEER
DATE: 5/23/2019

DOWNTOWN WATERFRONT IMPROVEMENTS PHASE I
CBJ CONTRACT NO. DH19-014

SHEET TITLE: **SEAWALK MODIFICATIONS PLAN / ELEVATION**

PND PROJECT NO.: 182045 C.A.N. NO.: AECC250

S4.01

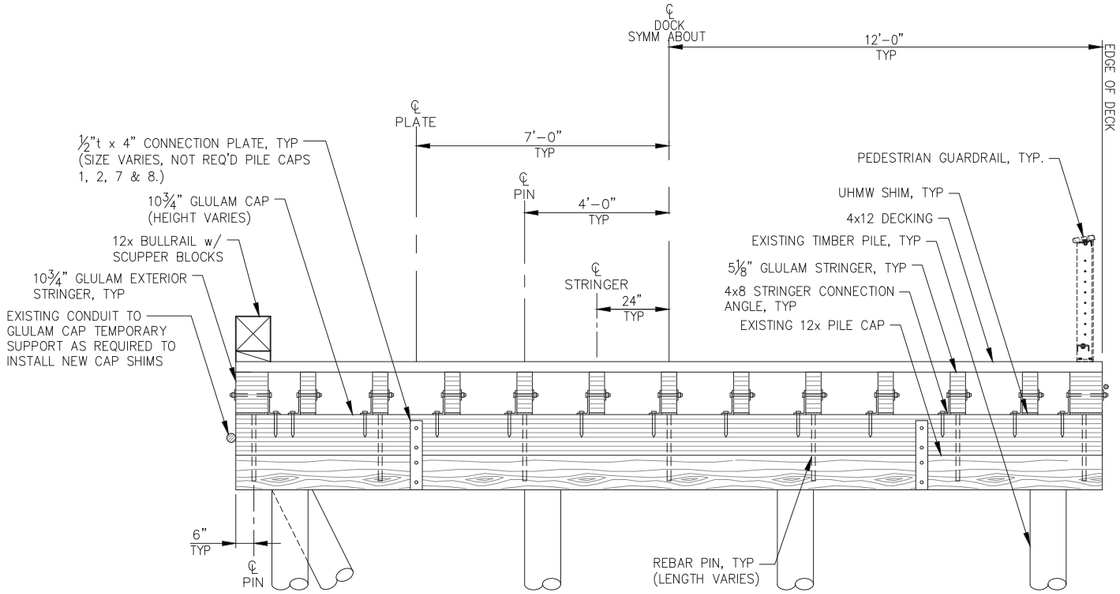

A S4.01 TYPICAL RAMP SHIM SECTION AT LOCATIONS WITH OUT EXISTING SHIMS

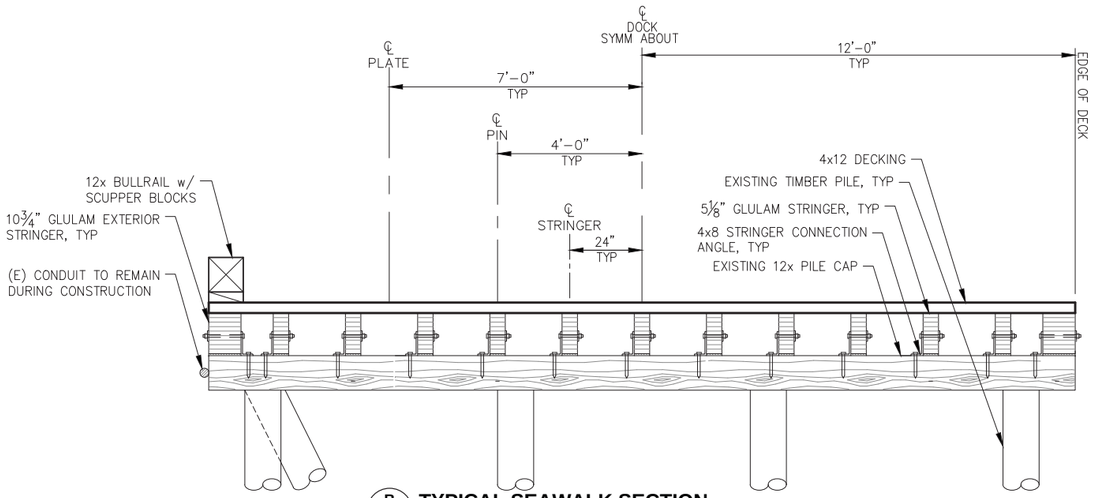

B - TYPICAL SEAWALK SECTION WITH NEW DECK

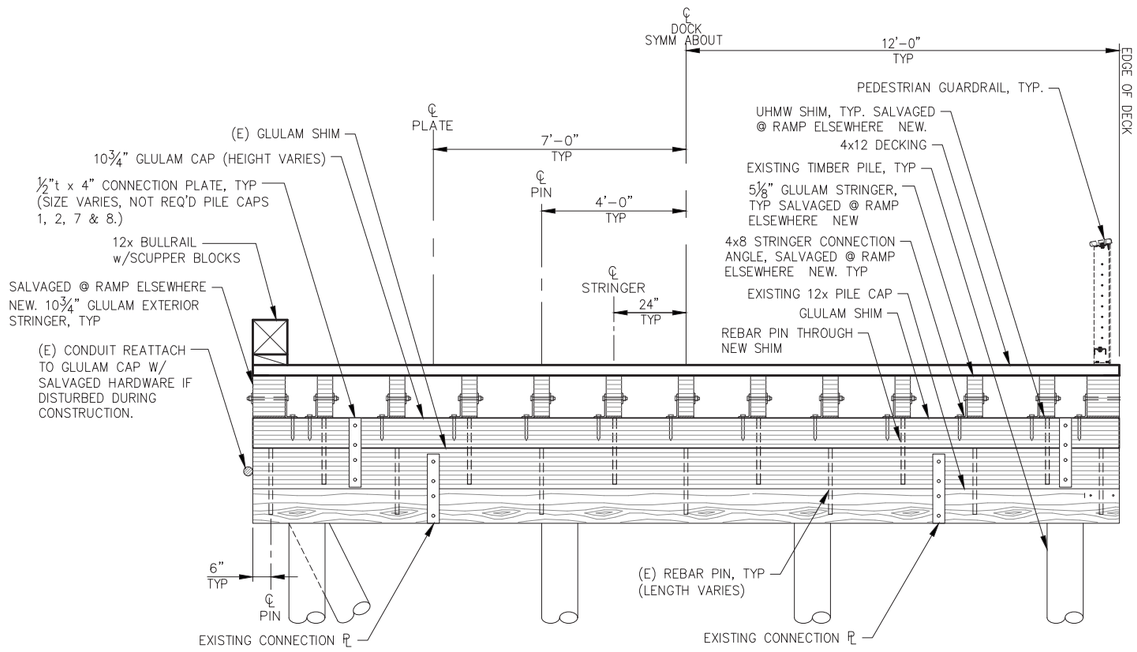

C S4.01 TYPICAL RAMP SHIM SECTION AT LOCATIONS WITH EXISTING SHIMS

CITY & BOROUGH OF JUNEAU — DOCKS & HARBORS

REVISIONS

REV.	DATE	DESCRIPTION	DWN.	CKD.	APP.

PND ENGINEERS, INC.
9360 Glacier Highway Ste 100
Juneau, Alaska 99801
Phone: 907-586-2093
Fax: 907-586-2099
www.pndengineers.com

DESIGN: BMI CHECKED: CRS
DRAWN: BMI APPROVED: CRS
SCALE: NTS

STATE OF ALASKA 49TH — Charles R. Somerville CE-8845 REGISTERED PROFESSIONAL ENGINEER
DATE: 5/23/2019

DOWNTOWN WATERFRONT IMPROVEMENTS PHASE I
CBJ CONTRACT NO. DH19-014

SHEET TITLE: **SEAWALK MODIFICATIONS SECTIONS**

S4.02

PND PROJECT NO.: 182045 C.A.N. NO.: AECC250

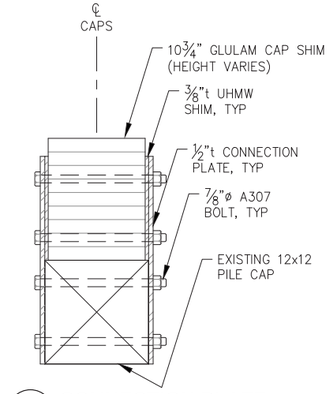

A - CONNECTION PLATE TYPICAL SECTION

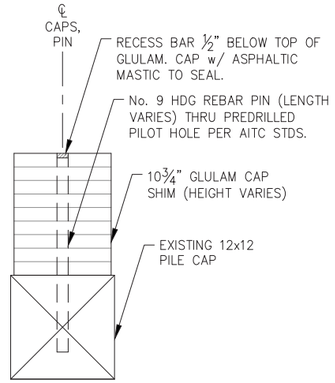

B - REBAR PIN TYPICAL SECTION AT UNSHIMED EXISTING PILE CAP

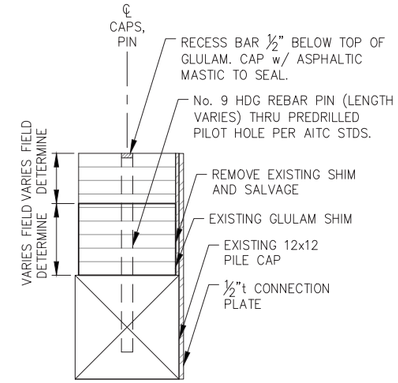

C - REBAR PIN TYPICAL SECTION AT SHIMED EXISTING PILE CAP

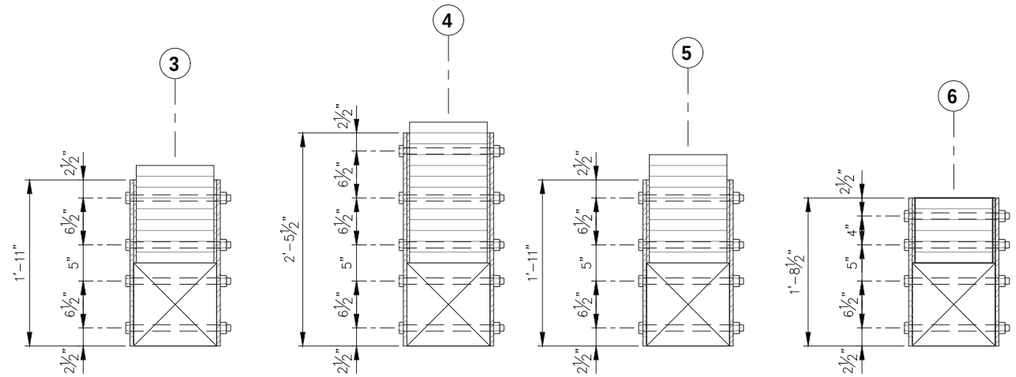

G - VARIOUS EXISTING PILE CAP CONNECTION PLATES TYPICAL SECTION

NOTE:
DETAILS NOT SHOWN SIMILAR TO TYPICAL SECTION A.

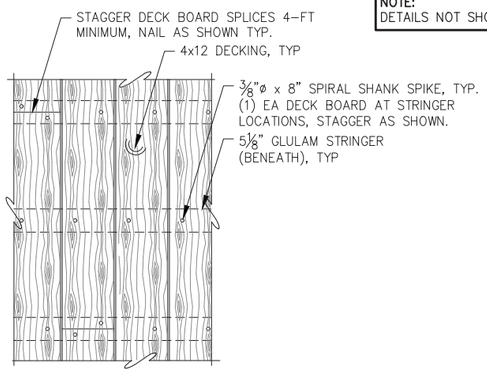

DECK NAILING - PLAN

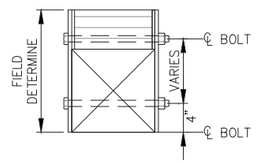

H - CAP CONNECTION PLATE SHIMS LESS THAN 9" DEEP

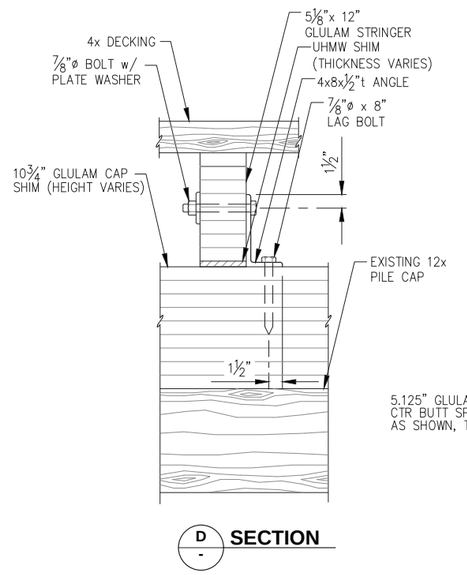

D - SECTION

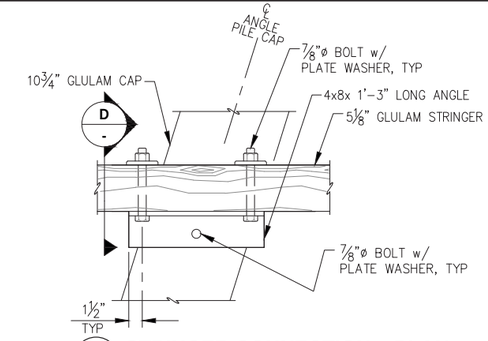

E - STRINGER CONNECTION - PLAN

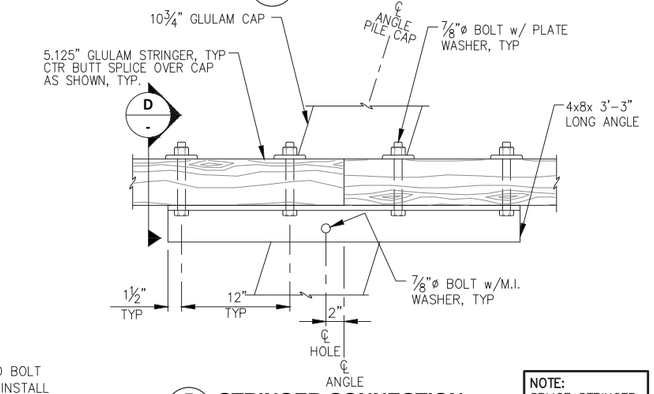

F - STRINGER CONNECTION PLAN AT SPLICE

NOTE:
SPLICE STRINGER AS REQUIRED.

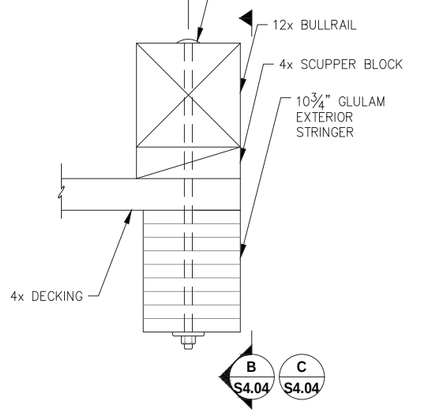

I - BULLRAIL - TYPICAL SECTION

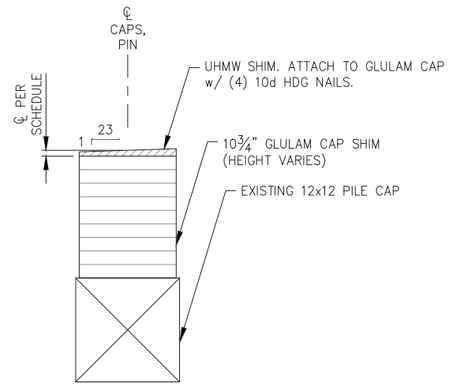

J - UHMW SHIM - TYPICAL SECTION

NOTE:
PROVIDE ADDITIONAL ASPHALT SHINGLES FOR SHIMMING AS REQ'D.

CITY & BOROUGH OF JUNEAU DOCKS & HARBORS

REVISIONS

REV.	DATE	DESCRIPTION	DWN.	CKD.	APP.

PND ENGINEERS, INC.
9360 Glacier Highway Ste 100
Juneau, Alaska 99801
Phone: 907-586-2093
Fax: 907-586-2099
www.pndengineers.com

STATE OF ALASKA 49TH — Charles R. Somerville CE-8845 — REGISTERED PROFESSIONAL ENGINEER

DESIGN: BMI CHECKED: CRS
DRAWN: BMI APPROVED: CRS
SCALE: NTS
DATE: 5/23/2019

DOWNTOWN WATERFRONT IMPROVEMENTS PHASE I
CBJ CONTRACT NO. DH19-014

SHEET TITLE: **SEAWALK MODIFICATION DETAILS**

PND PROJECT NO.: 182045 C.A.N. NO.: AECC250

S4.03

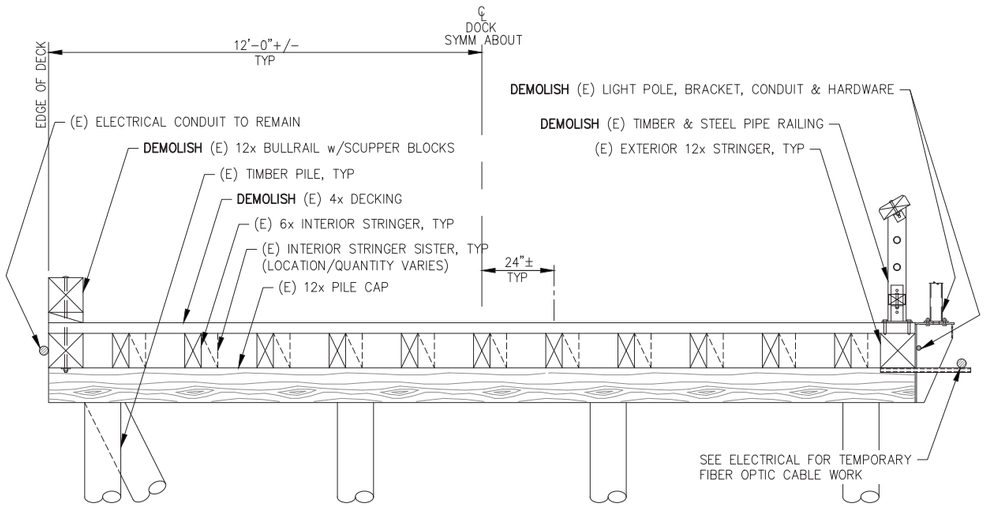

A / - **TYPICAL EXISTING DOCK SECTION**

NOTE: ALL EXISTING DOCK ITEMS TO REMAIN UNLESS OTHERWISE NOTED.

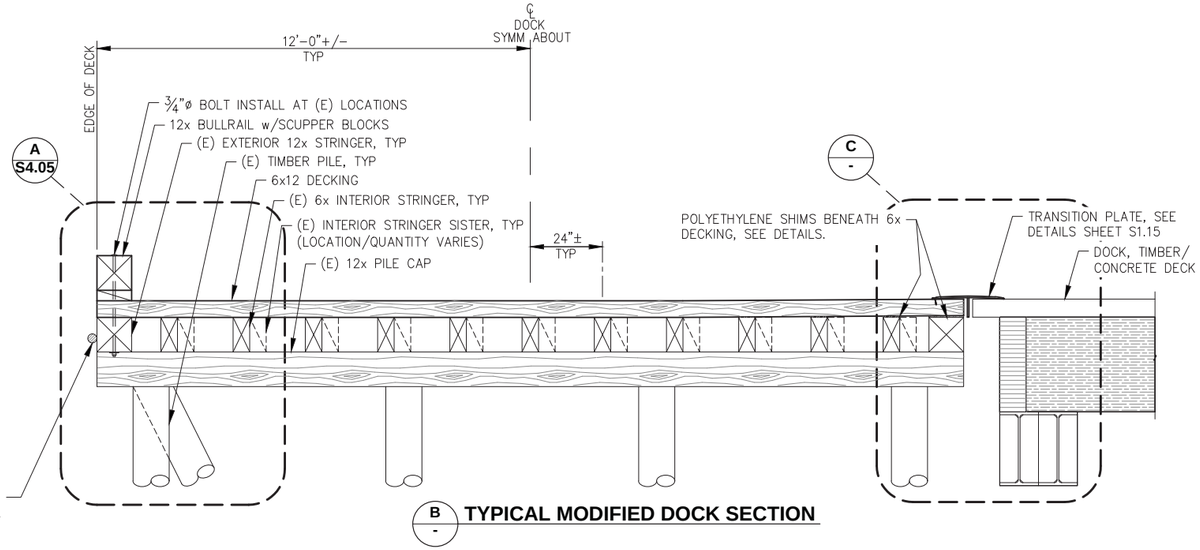

B / - **TYPICAL MODIFIED DOCK SECTION**

DOCK MODIFICATIONS SCOPE OF IMPROVEMENTS:

- REMOVE AND DISPOSE EXISTING DECKING, BULLRAIL, LIGHT POLES, BRACKETS & CONDUIT AND ASSOCIATED HARDWARE IN THEIR ENTIRETY.
- INSTALL NEW SHIMS, DECKING AND BULLRAIL AS SHOWN.
- CONTRACTOR SHALL VERIFY ALL FINAL ELEMENTS/MEASUREMENTS NOT SPECIFICALLY SHOWN AS REQUIRED TO PERFORM THE WORK.

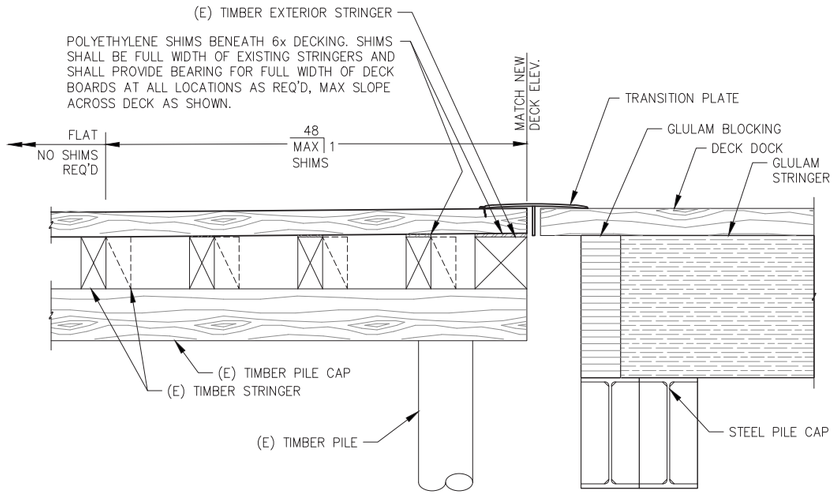

C / - **TYPICAL MODIFIED DOCK SECTION EAST SIDE SHIM DETAILS**

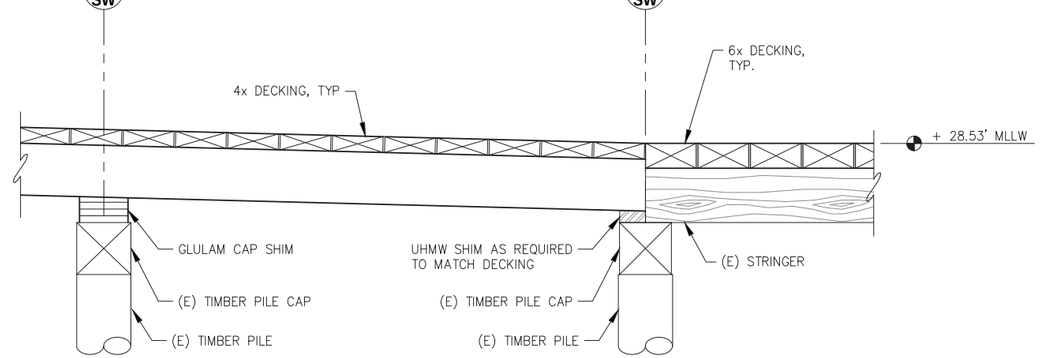

D / - **MODIFIED DOCK TRANSITION - PROFILE @ RAMP**

NOTE:

1. ELEVATION DIFFERENCE BETWEEN TOP OF EXISTING DECK AND TOP OF THE NEW DOCK (28.53') VARIES FROM 0" TO 3". CONTRACTOR SHALL CONFIRM QUANTITY, THICKNESS AND SLOPE OF SHIMS REQUIRED TO MEET THE MAX SLOPE AND TRANSITION REQUIREMENTS BETWEEN VARIOUS DECK SURFACES ON ALL SIDES.
2. IN LEIU OF SHIMS SOME PLANING OF BOTTOM SIDE OF NEW 6x DECK BOARDS MAY BE REQUIRED TO MATCH TOP TO NEW/ADJACENT DOCKS.

DEMOLISH = REMOVE & DISPOSE AT CONTRACTOR PROVIDED DISPOSAL SITE.

SALVAGE = REMOVE, SAVE & SUITABLY STORE AT OWNER DESIGNATED LOCATION OR RELOCATE AS SHOWN ON PLANS. OWNER'S DESIGNATED STORAGE LOCATION SHALL BE WITHIN 5 MILES OF PROJECT SITE. CONTRACTOR SHALL BE RESPONSIBLE FOR ALL TRANSPORTING, LOADING, UNLOADING AND GENERAL HANDLING OF SALVAGED MATERIALS. STORAGE OF SALVAGED MATERIALS SHALL BE COORDINATED WITH THE OWNER AT ALL TIMES. SPECIFIC LOCATIONS FOR MATERIALS TO BE SALVAGED AND STORED SHALL BE DICTATED BY THE OWNER AND SHALL BE AT THE OWNER'S SOLE DISCRETION. THE CONTRACTOR SHALL BE RESPONSIBLE FOR ANY DAMAGE INCURRED DUE TO HIS ACTIVITIES. DAMAGED MATERIALS SHALL BE REPAIRED OR REPLACED AT NO COST TO THE OWNER.

CITY & BOROUGH OF JUNEAU — DOCKS & HARBORS

REVISIONS

REV.	DATE	DESCRIPTION	DWN.	CKD.	APP.

PND ENGINEERS, INC.
9360 Glacier Highway Ste 100
Juneau, Alaska 99801
Phone: 907-586-2093
Fax: 907-586-2099
www.pndengineers.com

DESIGN: BMI CHECKED: CRS
DRAWN: BMI APPROVED: CRS
SCALE: NTS

STATE OF ALASKA 49TH — Charles R. Somerville CE-8845 REGISTERED PROFESSIONAL ENGINEER
DATE: 5/29/2019

DOWNTOWN WATERFRONT IMPROVEMENTS PHASE I
CBJ CONTRACT NO. DH19-014

SHEET TITLE: **SEAWALK DECK MODIFICATION DETAILS**

PND PROJECT NO.: 182045 C.A.N. NO.: AECC250

S4.04

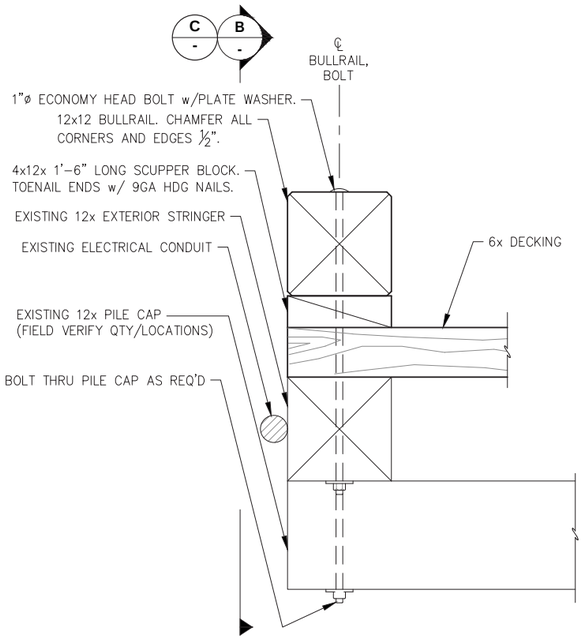

A - BULLRAIL - TYPICAL SECTION

NOTE:

- SCUPPER BLOCK AND CONNECTION BOLT SPACING 8'–0" O.C. MAX.
- PROVIDE BOLT LENGTH AS REQ'D IN LOCATIONS WHERE EXISTING PILE CAPS FALL BENEATH EXTERIOR STRINGER AND BOLT/SPLICE LOCATION.

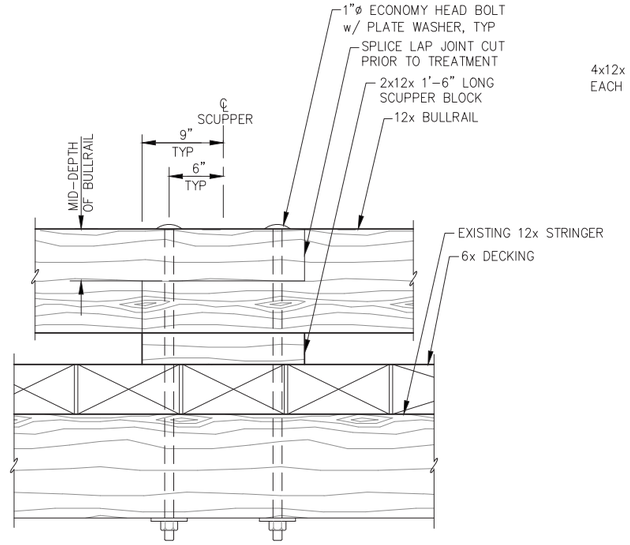

B - TYPICAL BULLRAIL SPLICE ELEVATION

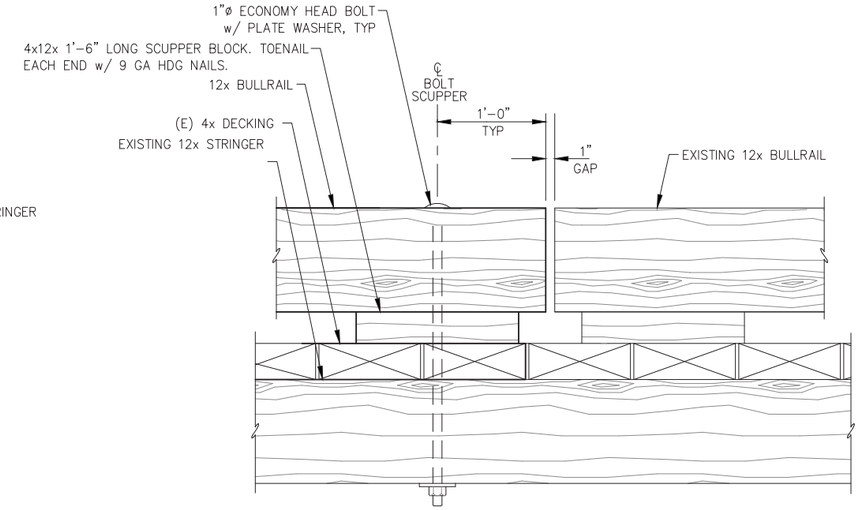

C - TYPICAL BULLRAIL END ELEVATION

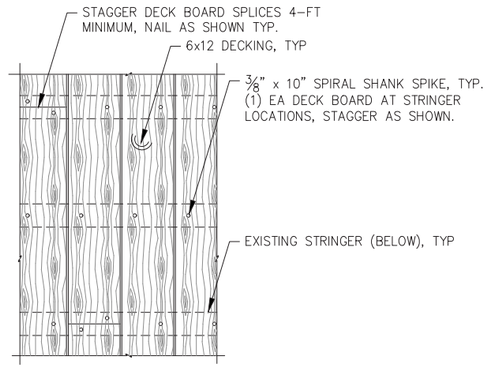

D - DECK NAILING PLAN

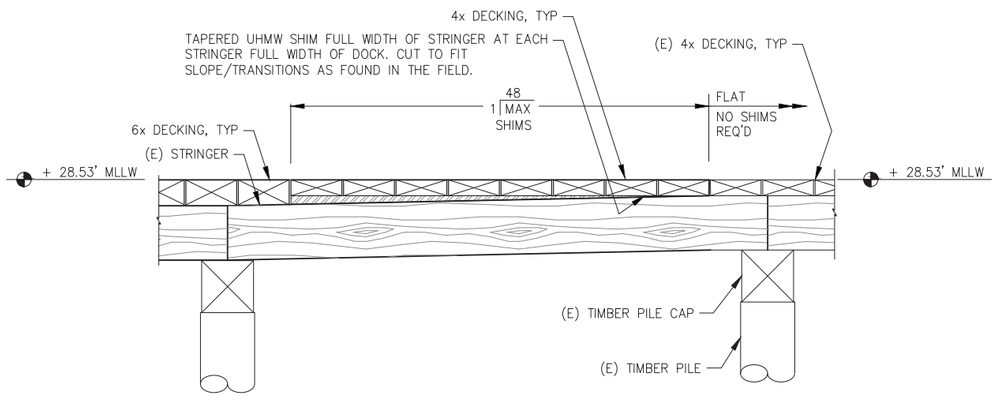

E - MODIFIED DOCK TRANSITION - PROFILE @ RAMP

NOTE: EXISTING DECK ELEVATIONS VARY, DETAIL SHOWS APPROXIMATE CONDITIONS. FIELD VERIFY EXISTING CONDITIONS.

CITY & BOROUGH OF JUNEAU DOCKS & HARBORS

REVISIONS

REV.	DATE	DESCRIPTION	DWN.	CKD.	APP.

PND ENGINEERS, INC.
9360 Glacier Highway Ste 100
Juneau, Alaska 99801
Phone: 907-586-2093
Fax: 907-586-2099
www.pndengineers.com

DESIGN: BMI CHECKED: CRS
DRAWN: BMI APPROVED: CRS
SCALE: NTS
DATE: 5/23/2019

STATE OF ALASKA 49TH
Charles R. Somerville
CE-8845
REGISTERED PROFESSIONAL ENGINEER

DOWNTOWN WATERFRONT IMPROVEMENTS PHASE I
CBJ CONTRACT NO. DH19-014

SHEET TITLE:
SEAWALK DECK MODIFICATION DETAILS

PND PROJECT NO.: 182045 C.A.N. NO.: AECC250

S4.05

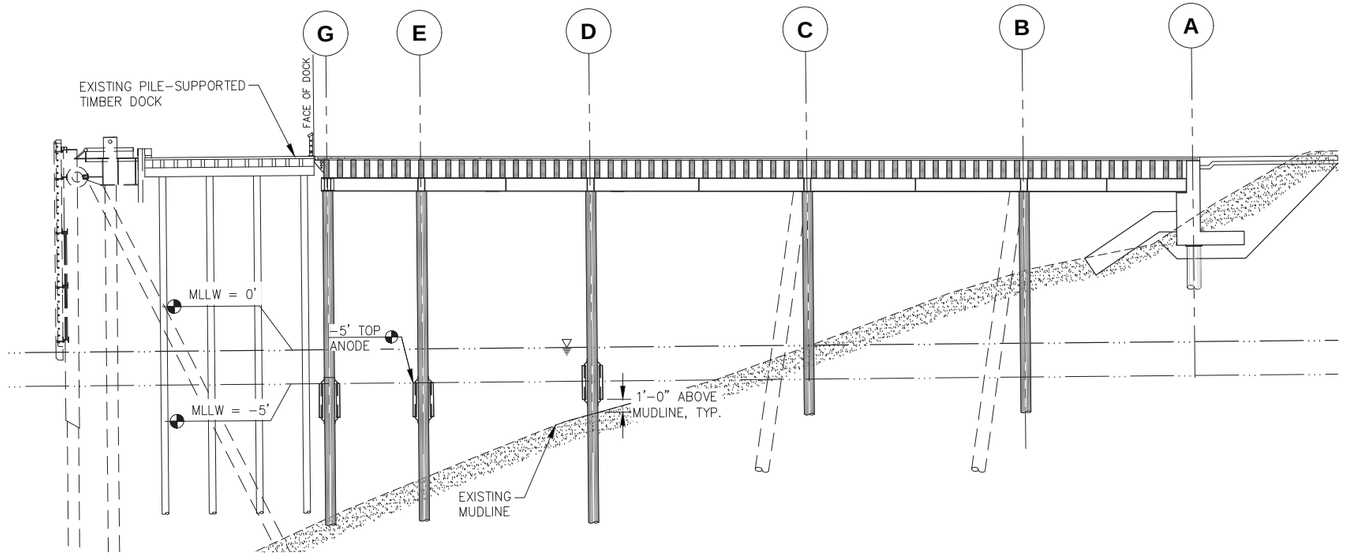

A / - PILE ANODE DOCK SECTION

NOTE: ANODE INSTALLATION ALONG GRID 5 SHOWN OTHER GRIDS SIMILAR

NOTE: ANODES SHALL BE INSTALLED ON ALL PILES WITH EXPOSED PILE BELOW A -5 MLLW ELEVATION. ANODES SHALL BE A MINIMUM OF 1'-0" FROM MUDLINE AND SHALL BE SPACED A MAXIMUM OF 20' WHEN PILE LENGTH ABOVE MUDLINE ALLOWS.

PILE ANODE SCHEDULE SUMMARY TABLE

LOCATION		DIAMETER (INCH)	WALL THICKNESS (INCH)	ANODE DIMENSION (INCH)	ANODE WEIGHT (LBS)	QUANTITY
1D	VERTICAL	18"	0.500	4x4x72	115	2
1E	VERTICAL	18"	0.500	4x4x72	115	2
1G	VERTICAL	18"	0.500	4x4x72	115	2
2D	VERTICAL	18"	0.500	4x4x72	115	2
2D.5	VERTICAL	18"	0.500	4x4x72	115	2
2G	VERTICAL	18"	0.500	4x4x72	115	2
3D	VERTICAL	18"	0.500	4x4x72	115	2
3D.5	VERTICAL	18"	0.500	4x4x72	115	2
3G	VERTICAL	18"	0.500	4x4x72	115	2
4D	VERTICAL	18"	0.500	4x4x72	115	2
4E	VERTICAL	18"	0.500	4x4x72	115	2
4G	VERTICAL	18"	0.500	4x4x72	115	2
5D	VERTICAL	18"	0.500	4x4x72	115	2
5E	VERTICAL	18"	0.500	4x4x72	115	2
5G	BATTER	18"	0.500	4x4x72	115	2
6D	VERTICAL	18"	0.500	4x4x72	115	2
6E	BATTER (S)	18"	0.500	4x4x72	115	2
6G	BATTER (N)	18"	0.500	4x4x72	115	2

PILE ANODE SCHEDULE SUMMARY TABLE

LOCATION		DIAMETER (INCH)	WALL THICKNESS (INCH)	ANODE DIMENSION (INCH)	ANODE WEIGHT (LBS)	QUANTITY
7D	VERTICAL	18"	0.500	4x4x72	115	2
7E	VERTICAL	18"	0.500	4x4x72	115	2
7G	VERTICAL	18"	0.500	4x4x72	115	2
8D	VERTICAL	16"	0.500	4x4x72	115	2
8E	VERTICAL	16"	0.500	4x4x72	115	2
8G	VERTICAL	16"	0.500	4x4x72	115	2
9FN	BATTER	16"	0.500	4x4x72	115	2
9FS	BATTER	16"	0.500	4x4x72	115	2
9G	VERTICAL	16"	0.500	4x4x72	115	2
10FN	BATTER	16"	0.500	4x4x72	115	2
10FS	BATTER	16"	0.500	4x4x72	115	2
10G	VERTICAL	16"	0.500	4x4x72	115	2
11FN	BATTER	16"	0.500	4x4x72	115	2
11FS	BATTER	16"	0.500	4x4x72	115	2
11G	VERTICAL	16"	0.500	4x4x72	115	2
12F	VERTICAL	16"	0.500	4x4x72	115	2
12G	VERTICAL	16"	0.500	4x4x72	115	2
13CC	VERTICAL	16"	0.500	4X4X72	115	2
13CC	BATTER	16"	0.500	4X4X72	115	2
14CC	VERTICAL	16"	0.500	4X4X72	115	2
13G	VERTICAL	16"	0.500	4X4X72	115	2
14G	VERTICAL	16"	0.500	4X4X72	115	2

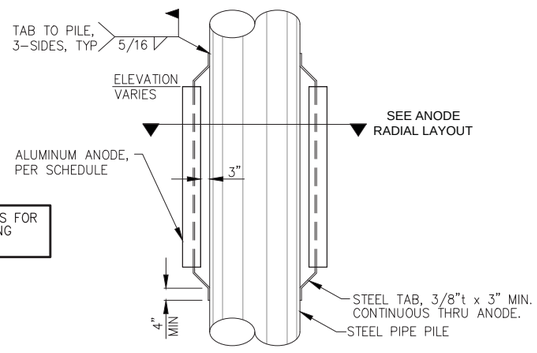

NOTE: SEE SPECIFICATIONS FOR FIELD WELD COATING REQUIREMENTS.

ANODE CONNECTION DETAIL

ANODE RADIAL LAYOUT

PIPE DIAMETER (INCH)	# ANODES / ELEV.	RADIAL LAYOUT (DEGREES)
16	2	180
18	2	180

SEE PLAN

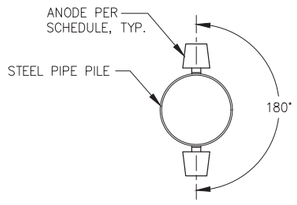

16" & 18" Ø PILE ANODE RADIAL LAYOUT PLAN

REVISIONS

REV.	DATE	DESCRIPTION	DWN.	CKD.	APP.

CITY & BOROUGH OF JUNEAU DOCKS & HARBORS

PND ENGINEERS, INC.
9360 Glacier Highway Ste 100
Juneau, Alaska 99801
Phone: 907-586-2093
Fax: 907-586-2099
www.pndengineers.com

DESIGN: MDS CHECKED: CRS
DRAWN: KLL APPROVED: CRS
SCALE: AS SHOWN
DATE: 5/23/2019

STATE OF ALASKA 49TH Charles R. Somerville CE-8845 REGISTERED PROFESSIONAL ENGINEER

DOWNTOWN WATERFRONT IMPROVEMENTS PHASE I
CBJ CONTRACT NO. DH19-014

SHEET TITLE: **PILE ANODES**

PND PROJECT NO.: 182045 C.A.N. NO.: AECC250

S5.01

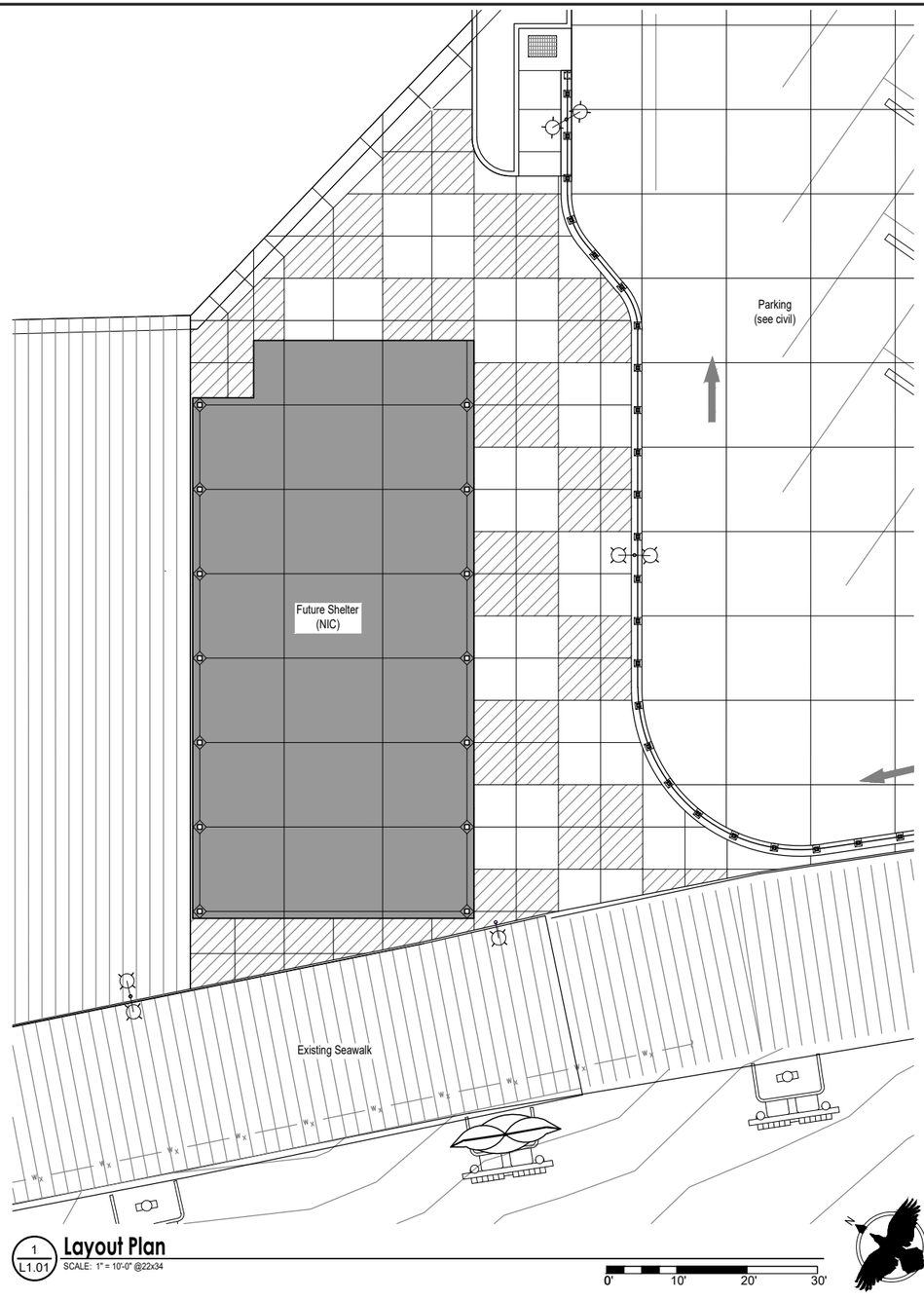

1 L1.01 **Layout Plan**
SCALE: 1" = 10'-0" @22x34

0' 10' 20' 30'

Paving Legend

- Concrete paving, see civil
- Sparkle concrete paving, see civil
- Colored concrete paving - silversmoke, see civil

Notes:
1. See civil for expansion and control joint layout of paved areas.

CITY & BOROUGH OF JUNEAU — DOCKS & HARBORS

Corvus Design
Landscape Architecture
www.corvus-design.com

REVISIONS

REV.	DATE	DESCRIPTION	DWN.	CKD.	APP.

PND ENGINEERS, INC.
9360 Glacier Highway Ste 100
Juneau, Alaska 99801
Phone: 907-586-2093
Fax: 907-586-2099
www.pndengineers.com

DESIGN: LP/CM CHECKED: CM
DRAWN: LP APPROVED: CM
SCALE:
DATE: 5/23/2019

STATE OF ALASKA — 49TH — Christopher R. Mertl — 5/23/2019 — No.10440 — REGISTERED PROFESSIONAL LANDSCAPE ARCHITECT

DOWNTOWN WATERFRONT IMPROVEMENTS
PHASE I
CBJ CONTRACT NO. DH19-014

SHEET TITLE: Concrete Paving Finish

PND PROJECT NO.: 182045 C.A.N. NO.: AECC250

L1.01 SHEET 1 OF 1

LEGEND

20/3	CIRCUIT BREAKER (AMPS/POLES)		LIGHT POLE
C/B	CIRCUIT BREAKER	NEC	NATIONAL ELECTRICAL CODE
CIVIL	CIVIL PROJECT DRAWINGS	N.I.C.	NOT IN CONTRACT
	CONTACTOR	NM	NON METALLIC
	DISCONNECT	(PE)	PHOTO ELECTRIC CELL
GRS	GALVANIZED RIGID STELL	REC	RECEPTACLE
GND	GROUND		RECEPTACLE, 120V, 20A INDUSTRIAL SPEC GRADE, WHITE WITH STAINLESS COVER PLATE
	GROUND BUSS	STRUCTURAL	STRUCTURAL PROJECT DRAWING SPECIFICATIONS
GFI	GROUND FAULT INTERRUPTER	UNISTRUT	SUPPORT CHANNEL UNISTRUT BRAND OR EQUAL
HT	HEAT TRACE	S	SWITCH, 120V, 20A INDUSTRIAL SPEC GRADE, WHITE WITH STAINLESS COVER PLATE
	HEAVY DUTY DISCONNECT (AMPS/POLES AS SHOWN)	(TYP)	TYPICAL
	HOME RUN	UHMW	ULTRA HIGH DENSITY MOLECULAR WEIGHT
LTG	LIGHTING	(M)	UTILITY METER
(LC)	LIGHTING CONTACTOR		

SHEET LIST TITLE

Sheet Number	Sheet Title
E1.01	OVERALL SITE PLAN – ELECTRICAL 1 OF 3
E1.02	OVERALL SITE PLAN – ELECTRICAL 2 OF 3
E1.03	OVERALL SITE PLAN – ELECTRICAL 3 OF 3
E1.04	PARTIAL CONCRETE DECK & TRENCH DETAIL – ELECTRICAL
E2.01	SINGLE LINE DIAGRAM
E2.02	EQUIPMENT & PANEL SCHEDULES
E2.03	ELECTRICAL RACK ELEVATIONS
E3.01	20' POLE DETAILS
E3.02	12' POLE DETAILS, LIGHT POLE TABLE & LUMINAIRE SCHEDULE
E3.03	LTG CONTROL SCHEMATIC & FUTURE POWER SINGLE LINE
E3.04	PARKING CANOPY PLAN – ELECTRICAL
E3.05	PARKING CANOPY SECTIONS AND DETAILS – ELECTRICAL
E4.01	FIBER CABLE RISER DIAGRAM
E4.02	EXISTING & NEW ACS RISER DIAGRAM
E4.03	CAMERA SCHEMATIC

NOTES:

1. REMOVE EXISTING LIGHT POLE AND REPLACE WITH TYPE A LUMINAIRE AND LIGHT POLE, SEE DETAILS 1 & 5, SHEET E3.01. BOLT LIGHT POLE BRACKET EXTENSION TO EXISTING ANCHOR BOLTS. BOLT NEW LIGHT POLE TO BRACKET EXTENSION. SEE STRUCTURAL FOR LIGHT POLE BRACKET EXTENSION. SPLICE EXISTING CONDUCTORS TO NEW CONDUCTORS (BRACKET EXTENSION HAS HANDHOLE TO ALLOW THIS WORK). POWER NEW LUMINAIRE FROM NEW CONDUCTORS (3 NO. 12). REUSE EXISTING CONDUCTORS FROM PANEL IN PARKING GARAGE TO POLE BASE (CKT 4 OR 12). SEE LIGHT POLE TABLE, SHEET E3.02. SEE LUMINAIRE SCHEDULE. PROVIDE POLES WITH BANNER ARMS.
2. REMOVE EXISTING WALL MOUNT LUMINAIRE. REPLACE WITH NEW TYPE D WALL MOUNT LUMINAIRE. USE CONCRETE ANCHORS (HILTE) TO SECURE TO PARKING GARAGE. FEED WITH SAME CIRCUIT AS EXISTING.

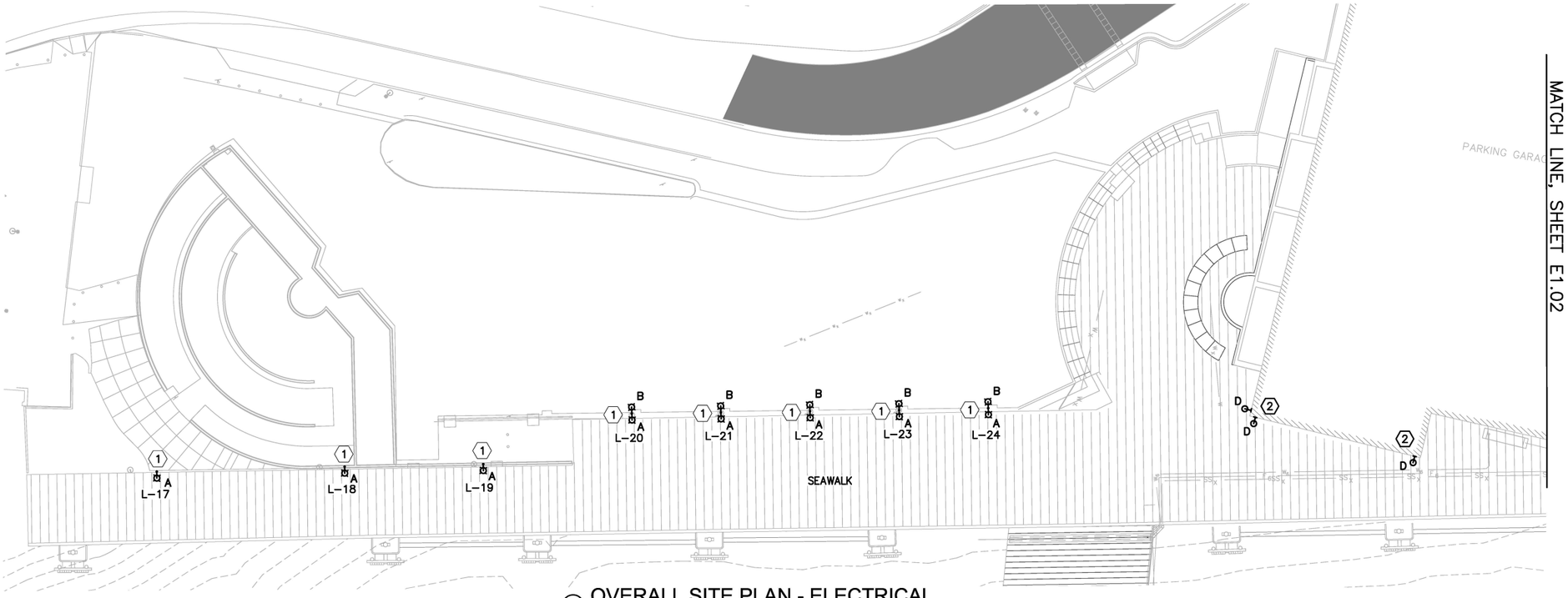

1 OVERALL SITE PLAN - ELECTRICAL

REVISIONS

REV.	DATE	DESCRIPTION	DWN.	CKD.	APP.

CITY & BOROUGH OF JUNEAU DOCKS & HARBORS

MORRIS ENGINEERING GROUP INC
2375 Jordan Avenue #7, Juneau, AK 99801
Phone: 907-789-3350, License: AECL1010

PND ENGINEERS, INC.
9360 Glacier Highway Ste 100
Juneau, Alaska 99801
Phone: 907-586-2093
Fax: 907-586-2099
www.pndengineers.com

DESIGN: MGM CHECKED: MGM
DRAWN: JRW APPROVED: MGM
SCALE: SCALE IN FEET 0 20 40 FT.

STATE OF ALASKA 49TH
Mark G. Morris
May 23, 2019
No. EE 8613
REGISTERED PROFESSIONAL ENGINEER
DATE: 5/23/2019

DOWNTOWN WATERFRONT IMPROVEMENTS PHASE I
CBJ CONTRACT NO. DH19-014

SHEET TITLE:
OVERALL SITE PLAN - ELECTRICAL 1 OF 3

PND PROJECT NO.: 182045 C.A.N. NO.: ~~AECG250~~.DWG

E1.01

SHEET NOTES:

1. ALL ENCLOSURES AND JUNCTION BOXES SHALL BE 316 STAINLESS STEEL, NEMA 4X.
2. LIGHT POLES ARE NUMBERED L–1 TO L–29. SEE LIGHT POLE TABLE, SHEET E3.02 FOR FOUNDATION TO BE USED. TYPE OF LUMINAIRE NEXT TO LIGHT POLE (A, B, C, OR D), SEE LUMINAIRE SCHEDULE.
3. INSTALL ALL EQUIPMENT PER CIVIL.
4. SEE EQUIPMENT SCHEDULE, SHEET E2.02 FOR (#) EQUIPMENT NUMBERS.
5. SUPPORT CONDUIT AND ENCLOSURE UNDER DOCK ON SUPPORT CHANNEL. SIZE AND QUANTITY AS REQUIRED. ROUTE CONDUIT BETWEEN BEAMS, UNDER BEAMS, ETC. AS REQUIRED. MANY BENDS MAY BE REQUIRED. MOUNT ENCLOSURES UNDER BEAMS OR ON SIDE OF BEAMS AS NEEDED. ROUTE CONDUIT AROUND STRUCTURE, WATER, & SEWER LINES, ETC.

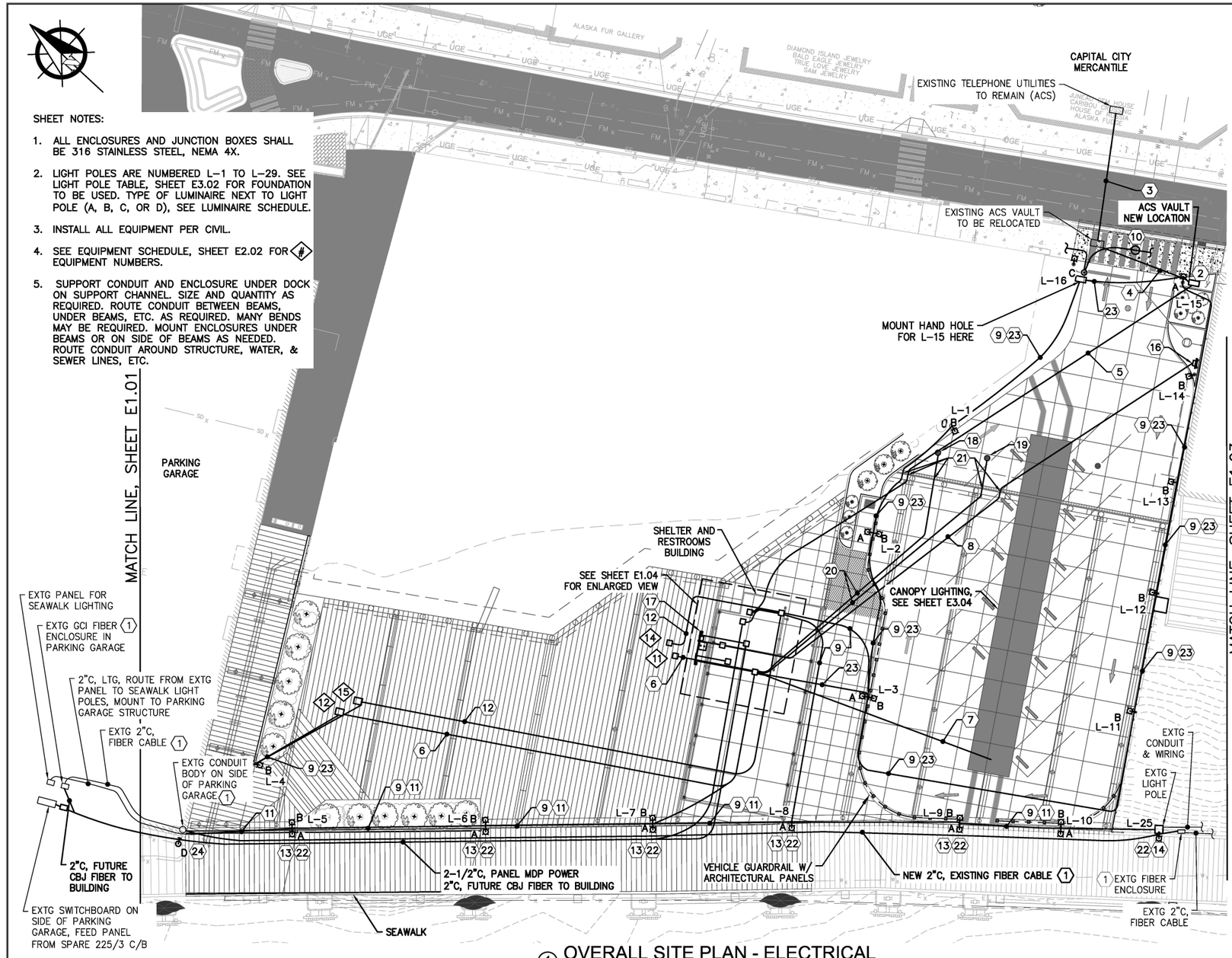

1 OVERALL SITE PLAN - ELECTRICAL

KEY NOTES:

1. REMOVE FIBER CABLE FROM TERMINATION POINT IN PARKING GARAGE AND PULL OUT OF CONDUIT BACK TO EXISTING ENCLOSURE JUST SOUTH OF PROJECT BOUNDARY. REMOVE CONDUIT ON SEAWALK BETWEEN PARKING GARAGE AND ENCLOSURE. REPLACE WITH NEW CONDUIT ROUTED UNDER SEAWALK. RE–PULL FIBER CABLE AND RE–TERMINATE.
2. RELOCATE ACS VAULT AND EXTEND EXISTING 4"C & 2"C FROM EXISTING VAULT LOCATION TO NEW LOCATION. PROVIDE 2"C FROM RELOCATED VAULT TO ENCLOSURE UNDER DECK AT FUTURE BUILDING LOCATION.
3. EXISTING 4"C & 2"C EXTEND TO RELOCATED ACS VAULT. USE RMC.
4. 4"C & 2"C, CONNECT TO EXISTING CONDUIT AND ROUTE TO RELOCATED VAULT.
5. 2"C, ROUTE TO ACS ENCLOSURE FOR FUTURE BUILDING.
6. 2"C, 2 NO. 8 & 1 NO. 10 GND (LTG), 4 NO. 8 & 1 NO. 10 GND (REC). MOUNT TO UNDERSIDE OF DECK ON SUPPORT CHANNEL.
7. 2"C, 2 NO. 8 & 1 NO. 10 GND. STUB UP INTO CANOPY COLUMN. SEE DETAILS SHEET E3.05.
8. (1) 2"C, LIFT STATION POWER.
   (1) 2"C, SPARE.
9. 2"C, FUTURE CAMERA ROUTE TO 12" X 12" X 6" JUNCTION BOX AT EACH LIGHT POLE. SEE DETAIL 3, SHEET E3.01. WHERE POLE IS MOUNTED ON CONCRETE BASE, ROUTE TO J–BOX NEXT TO POLE, SEE DETAIL 4, SHEET E3.01.
10. EXISTING CBJ STREET LIGHT TO BE REMOVED AND REPLACED BY LIGHT POLE WITH TYPE C LUMINAIRE. ROUTE EXISTING CONDUIT TO NEW POLE. PULL NEW CONDUCTORS BETWEEN EXISTING POLES ON EACH SIDE.
11. 2"C, 6 NO. 8 & 1 NO. 8 GND, ROUTE TO 12" X 12" X 6" JUNCTION BOX AT EACH LIGHT POLE, SEE DETAIL 3 SHEET E3.01.
12. 2"C, FUTURE CAMERA TO 24" X 24" X 12" ENCLOSURE.
13. REMOVE EXISTING LIGHT POLE, MOUNTING BRACKET, AND CONDUIT BACK TO PARKING GARAGE. PROVIDE NEW LIGHT POLE AND LUMINAIRES AS SHOWN. PROVIDE NEW CONDUIT AND WIRING. RE–POWER ON SAME CIRCUITS (CKTS 6, 8, & 10).
14. REMOVE EXISTING LIGHT POLE REPLACE WITH TYPE A LUMINAIRE AND LIGHT POLE SEE DETAIL 1 & 5, SHEET E3.01. BOLT LIGHT POLE BRACKET EXTENSION TO EXISTING ANCHOR BOLTS. BOLT NEW LIGHT POLE TO LIGHT POLE BRACKET EXTENSION. SPLICE EXISTING CONDUCTORS TO NEW CONDUCTORS (BRACKET EXTENSION HAS HANDHOLE TO ALLOW THIS WORK). POWER NEW LUMINAIRE FROM NEW CONDUCTORS (3 NO. 12). REUSE EXISTING CONDUCTORS FROM PANEL IN PARKING GARAGE TO POLE BASE (CKTS 6, 8, & 10).
15. (2) 2"C, SPARE
16. DISCONNECT AND LIFT STATION CONTROL PANEL MOUNT TO RACK ADJACENT LIFT STATION, SEE DETAIL 2, SHEET E2.03.
17. PANEL MDP, TRANSFORMER, PANEL B, & LIGHTING CONTACTOR ON RACK, SEE SHEET E2.03.
18. WATER MANHOLE. SEE CIVIL.
19. SEWER MANHOLE. SEE CIVIL.
20. 2"C, SPARE.
21. ROUTE CONDUIT AT 90° ANGLE TO WALL. SLEEVE ALL CONDUIT PENETRATIONS IN WALL. COORDINATE WITH FABRICATOR OF CONCRETE ABUTMENT. SEE CIVIL.
22. PROVIDE POLE WITH BANNER ARMS. SEE DETAIL 1, SHEET E3.01.
23. 2"C, 4 NO. 8 & 1 NO. 10 GND LIGHTING (2 NO. 8), SPARE (2 NO. 8).
24. REMOVE EXISTING WALL MOUNT LUMINAIRE. REPLACE WITH NEW TYPE D WALL MOUNT LUMINAIRE. USE CONCRETE ANCHORS (HILTE) TO SECURE TO PARKING GARAGE. FEED WITH SAME CIRCUIT AS EXISTING.

CITY & BOROUGH OF JUNEAU DOCKS & HARBORS

MORRIS ENGINEERING GROUP INC
2375 Jordan Avenue #7, Juneau, AK 99801
Phone: 907-789-3350, License: AECL1010

REVISIONS

REV.	DATE	DESCRIPTION	DWN.	CKD.	APP.

PND ENGINEERS, INC.
9360 Glacier Highway Ste 100
Juneau, Alaska 99801
Phone: 907-586-2093
Fax: 907-586-2099
www.pndengineers.com

DESIGN: MGM CHECKED: MGM
DRAWN: JRW APPROVED: MGM
SCALE: SCALE IN FEET 0 20 40 FT.

STATE OF ALASKA 49TH
Mark G. Morris
May 23, 2019
No. EE 8813
REGISTERED PROFESSIONAL ENGINEER
DATE: 5/23/2019

DOWNTOWN WATERFRONT IMPROVEMENTS PHASE I
CBJ CONTRACT NO. DH19-014

SHEET TITLE:
OVERALL SITE PLAN - ELECTRICAL 2 OF 3

PND PROJECT NO.: 182045
C.A.N. NO.: ~~AECG250~~.DWG

E1.02

NOTES:

1. REMOVE EXISTING LIGHT POLE AND REPLACE WITH TYPE A LUMINAIRE AND LIGHT POLE, SEE DETAILS 1 & 5, SHEET E3.01. BOLT LIGHT POLE BRACKET EXTENSION TO EXISTING ANCHOR BOLTS. BOLT NEW LIGHT POLE TO BRACKET EXTENSION. SEE STRUCTURAL FOR LIGHT POLE BRACKET EXTENSION. SPLICE EXISTING CONDUCTORS TO NEW CONDUCTORS (BRACKET EXTENSION HAS HANDHOLE TO ALLOW THIS WORK). POWER NEW LUMINAIRE FROM NEW CONDUCTORS (3 NO. 12). REUSE EXISTING CONDUCTORS FROM PANEL IN PARKING GARAGE TO POLE BASE (CKT 6, 8 OR 10). SEE LIGHT POLE TABLE, SHEET E3.02. SEE LIMINAIRE SCHEDULE. PROVIDE POLES WITH BANNER ARMS.

GENERAL NOTES (APPLICABLE ALL SHEETS):

1. ALL WORK ON ALL SHEETS IS NEW UNLESS OTHERWISE NOTED.
2. PERFORM ALL WORK PER THE 2017 NATIONAL ELECTRIC CODE (NEC) AND OTHER APPLICABLE NATIONAL, STATE, AND LOCAL CODES AND STANDARDS. PROVIDE EQUIPMENT AND AN INSTALLATION THAT COMPLIES WITH ARTICLE 555 OF THE NEC.
3. MOUNT ALL OF THE ELECTRICAL EQUIPMENT IN THE LOCATIONS SHOWN ON THE CIVIL DRAWINGS. LOCATIONS SHOWN ON THE ELECTRICAL DRAWINGS ARE APPROXIMATE.
4. SEE CIVIL AND STRUCTURAL DRAWINGS FOR MOUNTING ALL ELECTRICAL EQUIPMENT AS WELL AS ELECTRICAL DRAWINGS. MOUNTING POSTS, LIGHT POLE BASE DETAILS, CABLE TRAY, PEDESTAL FRAMES, ETC. ARE DETAILED ON THE CIVIL DRAWINGS. MOUNT ELECTRICAL EQUIPMENT AS SHOWN ON BOTH ELECTRICAL AND CIVIL DRAWINGS. SIZE MOUNTING BOLTS, BRACKETS, HARDWARE, ETC. FOR A SAFETY FACTOR OF 5 MINIMUM. ALL EQUIPMENT AND MATERIALS SHALL NOT MOVE WHEN PULLED OR PUSHED BY HAND (EXCEPT CABLES AND FLEXIBLE CONDUIT). SECURE ALL CONDUIT WITHIN 12 INCHES OF END OF CONDUIT AND AS REQUIRED PER NEC.
5. FIELD TREAT ALL HOT DIPPED GALVANIZED MATERIALS THAT ARE CUT, DRILLED, SCRATCHED OR DAMAGED. SEE CIVIL FOR FIELD TREATMENT.
6. ALL CONDUCTORS SHALL BE COPPER, ALL INSULATION SHALL BE 600V RATED. TYPE XHHW FOR CONDUCTORS NOT IN A CABLE. ALL CABLES SHALL BE THE TYPE SPECIFIED, NO SUBSTITUTIONS.
7. IF GALVANIZED THREADS ARE CHASED IN ORDER TO BE USABLE, TREAT CHASED THREADS WITH BRAKE CLEANER, THEN COAT WITH MARINE TRAILER WHEEL BEARING GREASE BEFORE APPLYING A STAINLESS STEEL WASHER AND NUT. APPLY GREASE AFTER DRILLING AND TAPPING.
8. USE 316 STAINLESS STEEL BOLTS, WASHERS, ETC. TO MOUNT ELECTRICAL EQUIPMENT AND STRUT CHANNEL. ALL FASTENERS AND OTHER EXPOSED HARDWARE SHALL BE 316 STAINLESS STEEL. ALL STAINLESS STEEL SHALL BE 316 STAINLESS STEEL.
9. SEAL ALL PENETRATIONS IN ELECTRICAL EQUIPMENT WITH UL LISTED HARDWARE FOR SUCH USE. USE RUBBER OR SILICONE WASHERS IN ADDITION TO STAINLESS STEEL WASHERS.
10. USE 316 STAINLESS STEEL SUPPORT CHANNEL (UNISTRUT) TO SUPPORT CONDUIT, PANELS, CONTACTORS, ENCLOSURES, AND ALL OTHER ELECTRICAL EQUIPMENT. TRIM SUPPORT CHANNEL 1/4" SHORT OF EDGE OF EQUIPMENT AND POSTS. SAND END OF SUPPORT CHANNEL SMOOTH. USE CABLE SUPPORTS THAT COMPLY WITH 555.13(4). USE CUSHION STRAPS WHEN SUPPORTING CABLE TO SUPPORT CHANNEL. PROVIDE SUPPORT CHANNEL UNDER DOCK, SPACING AND QUANTITY AS REQUIRED.
11. PROVIDE OXIDE INHIBITING COMPOUND ON ALL ELECTRICAL CONNECTIONS. BURNDY PENETROX TYPE A OR E AS REQUIRED.
12. ALL LUGS AND ELECTRICAL TERMINALS SHALL BE COPPER OR TIN PLATED HIGH CONDUCTIVE ALUMINUM.
13. THE PART NUMBERS SHOWN ON THE DRAWINGS ARE NOT TO BE USED AS A BILL OF MATERIALS. VERIFY ALL PART NUMBERS ARE CORRECT PRIOR TO ORDERING, VERIFY ALL REQUIRED OR NECESSARY ACCESSORIES, FEATURES, MATERIAL TYPE, ETC. ARE INCLUDED.
14. BUILD THE PROJECT AS DESIGNED. DO NOT ASSUME THE DESIGN WILL BE CHANGED AT THE CONTRACTOR'S REQUEST.
15. PROVIDE CONDUIT BODIES IN ALL CONDUIT RUNS AS REQUIRED FOR NUMBER OF BENDS AND AS NEEDED.
16. USE RIGID STEEL CONDUIT WHERE IMPRACTICAL TO USE SCHEDULE 80 PVC DUE TO SPACING BETWEEN SUPPORTS OR OTHER FACTORS.



1 OVERALL SITE PLAN - ELECTRICAL

CITY & BOROUGH OF JUNEAU DOCKS & HARBORS

MORRIS ENGINEERING GROUP INC
2375 Jordan Avenue #7, Juneau, AK 99801
Phone: 907-789-3350, License: AECL1010

REVISIONS

REV.	DATE	DESCRIPTION	DWN.	CKD.	APP.

PND ENGINEERS, INC.
9360 Glacier Highway Ste 100
Juneau, Alaska 99801
Phone: 907-586-2093
Fax: 907-586-2099
www.pndengineers.com

DESIGN: MGM CHECKED: MGM
DRAWN: JRW APPROVED: MGM
SCALE: SCALE IN FEET 0 20 40 FT.

STATE OF ALASKA 49TH
Mark G. Morris
May 23, 2019
No. EE 8613
REGISTERED PROFESSIONAL ENGINEER
DATE: 5/23/2019

DOWNTOWN WATERFRONT IMPROVEMENTS
PHASE I
CBJ CONTRACT NO. DH19-014

SHEET TITLE:
OVERALL SITE PLAN - ELECTRICAL 3 OF 3

E1.03

PND PROJECT NO.: 182045 C.A.N. NO.: ~~AECC250~~.DWG

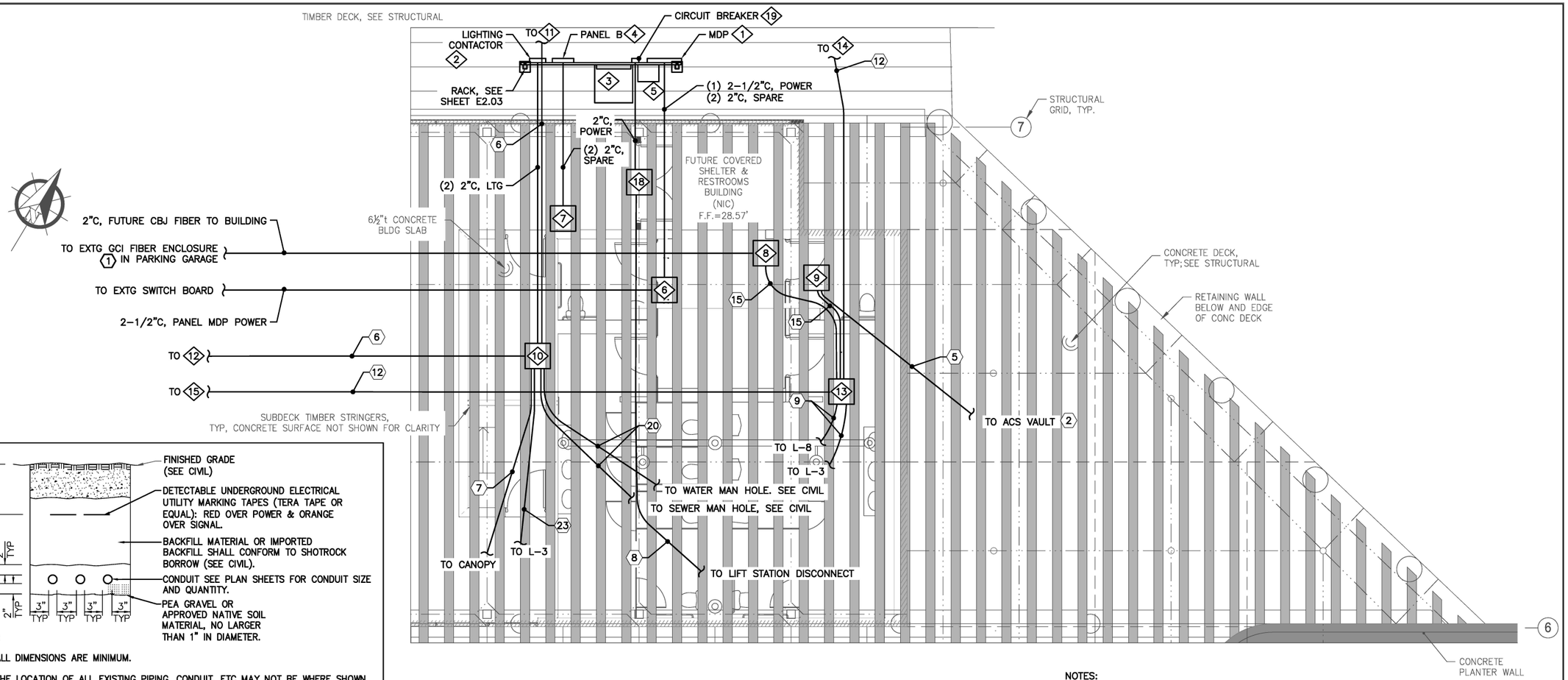

NOTES:

1. SEE SHEET E1.02 FOR (#) KEY NOTES.
2. SEE EQUIPMENT SCHEDULE, SHEET E2.02 FOR ◇# EQUIPMENT NUMBERS.

1 PARTIAL CONCRETE DECK - ELECTRICAL

NOTES:

1. ALL DIMENSIONS ARE MINIMUM.
2. THE LOCATION OF ALL EXISTING PIPING, CONDUIT, ETC MAY NOT BE WHERE SHOWN AND MAY NOT BE SHOWN. ALL LOCATIONS THAT ARE SHOWN ARE APPROXIMATE AND SHOULD BE FIELD VERIFIED. OBTAIN UTILITY LOCATES PRIOR TO DIGGING. DIG WITH CAUTION. AVOID WATER, SEWER, DRAINAGE PIPES AND OTHER CONFLICTS.
3. MAINTAIN 12 INCHES MINIMUM SEPARATION (ALL DIRECTIONS) BETWEEN POWER AND OTHER EXISTING CONDUITS, PIPES, CONCRETE STRUCTURE, VAULTS, ETC.
4. CUT & REPLACE EXISTING ASPHALT, CONCRETE, CONCRETE CURB, GUTTER, SIDEWALK, ETC. AS NECESSARY.
5. ALL TRENCHES SHALL BE 18" WIDE MIN. COMPACT BACKFILL PER CIVIL. TOP 6" OF MATERIAL PER CIVIL.
6. POWER UTILITY CONDUIT SHALL BE BURIED AT A MINIMUM OF 3'.
7. MODIFY CONDUIT BURIAL DEPTH WHERE SHOWN ON DRAWINGS.
8. MAINTAIN 36" MINIMUM LATERAL SEPARATION FROM WATER AND SEWER LINES. MAINTAIN 12" SEPARATION BETWEEN ELECTRICAL UTILITY CONDUITS.

2 TRENCH DETAIL
NO SCALE

REVISIONS

REV.	DATE	DESCRIPTION	DWN.	CKD.	APP.

CITY & BOROUGH OF JUNEAU DOCKS & HARBORS
MORRIS ENGINEERING GROUP INC
2375 Jordan Avenue #7, Juneau, AK 99801
Phone: 907-789-3350, License: AECL1010

PND ENGINEERS, INC.
9360 Glacier Highway Ste 100
Juneau, Alaska 99801
Phone: 907-586-2093
Fax: 907-586-2099
www.pndengineers.com

DESIGN: MGM CHECKED: MGM
DRAWN: JRW APPROVED: MGM
SCALE:

STATE OF ALASKA 49TH
Mark G. Morris
May 23, 2019
No. EE 8613
REGISTERED PROFESSIONAL ENGINEER
DATE: 5/23/2019

DOWNTOWN WATERFRONT IMPROVEMENTS PHASE I
CBJ CONTRACT NO. DH19-014

SHEET TITLE:
PARTIAL CONCRETE DECK & TRENCH DETAIL - ELECTRICAL

PND PROJECT NO.: 182045 C.A.N. NO.: AECC250

E1.04

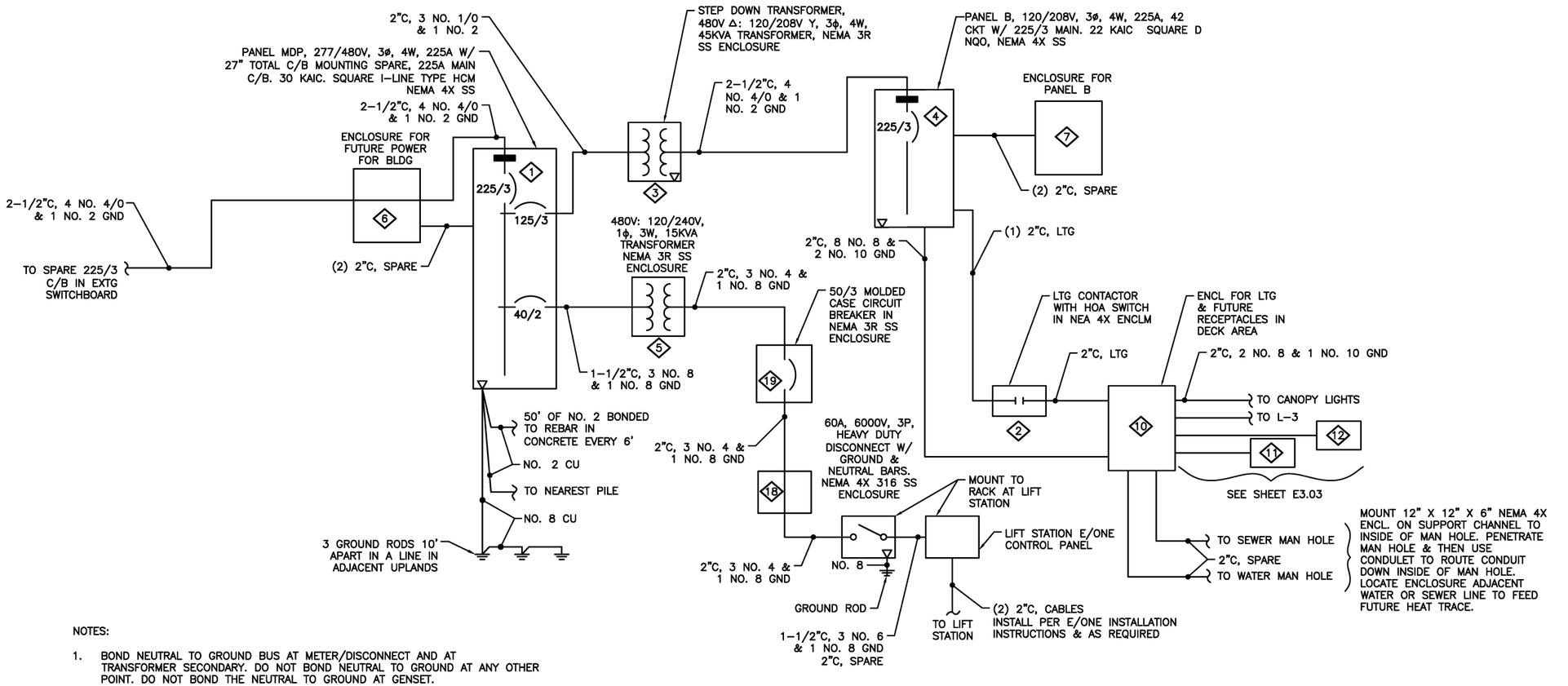

NOTES:

1. BOND NEUTRAL TO GROUND BUS AT METER/DISCONNECT AND AT TRANSFORMER SECONDARY. DO NOT BOND NEUTRAL TO GROUND AT ANY OTHER POINT. DO NOT BOND THE NEUTRAL TO GROUND AT GENSET.
2. THE TRANSFORMER SECONDARY FEEDER THAT FEEDS PANEL G SHALL BE NO MORE THAN 10' LONG. SAME FOR FEEDER TO 5D/3 C/B FROM TRANSFORMER ⑤
3. SEE EQUIPMENT SCHEDULE, SHEET E2.02 FOR ⟨#⟩ EQUIPMENT NUMBERS.

① SINGLE LINE DIAGRAM
NO SCALE

CITY & BOROUGH OF JUNEAU DOCKS & HARBORS

MORRIS ENGINEERING GROUP INC
2375 Jordan Avenue #7, Juneau, AK 99801
Phone: 907-789-3350, License: AECL1010

REVISIONS

REV.	DATE	DESCRIPTION	DWN.	CKD.	APP.

PND ENGINEERS, INC.
9360 Glacier Highway Ste 100
Juneau, Alaska 99801
Phone: 907-586-2093
Fax: 907-586-2099
www.pndengineers.com

DESIGN: MGM CHECKED: MGM
DRAWN: JRW APPROVED: MGM
SCALE:

STATE OF ALASKA 49TH
Mark G. Morris
May 23, 2019
No. EE 8813
REGISTERED PROFESSIONAL ENGINEER
DATE: 5/23/2019

DOWNTOWN WATERFRONT IMPROVEMENTS PHASE I
CBJ CONTRACT NO. DH19-014

SHEET TITLE: **SINGLE LINE DIAGRAM**

PND PROJECT NO.: 182045 C.A.N. NO.: AECC250

E2.01

EQUIPMENT SCHEDULE

1. PANEL MDP, MOUNT TOP AT 72" AFG, SQUARE D I-LINE. 277/480V, 3ϕ, 4 WIRE, 225 AMP, W/ 225 AMP MAIN. SEE SINGLE LINE DIAGRAM, E2.01.
2. LIGHTING CONTACTOR. 30A, 30 KAIC, 6 POLE LIGHTING CONTACTOR WITH HOA SWITCH. CONTROL ON AUTOSIDE WITH NEMA RATED PHOTOCELL MOUNTED ON CONDUIT ON RACK AT 6'. MOUNT IN J-BOX TO SHIELD FROM SITE LIGHTING. USE CONTACTOR TO CONTROL EXTERIOR LIGHTS. SEE LIGHTING CONTROL SCHEMATIC, SHEET E3.03.
3. STEP DOWN TRANSFORMER. 480VΔ:120/208V Y, 3ϕ, 4 WIRE, 45 KVA. FLOOR MOUNT WITH COPPER WINDINGS. SQUARE D EX45ST3HCU. BOLT TO PLATE. DRILL AND TAP PLATE. SEE STRUCTURAL.
4. PANEL B. MOUNT TOP AT 72" AFF. SQUARE D NQO. SERIES. 120/280V, 3ϕ, 4 WIRE, 225 AMP, W/ 225A MAIN, 22 KAIC, 42 CKT. SEE SINGLE LINE DIAGRAM, E2.01.
5. NEMA 3R TRANSFORMER. STAINLESS STEEL ENCLOSURE, 480V:120/240V 1ϕ, 3W, 15 KVA. BOLT TO PLATE. DRILL AND TAP PLATE. SEE STRUCTURAL.
6. 24" X 24" X 12" NEMA 4X ENCLOSURE FOR FUTURE POWER TO BUILDING MOUNT TO SUPPORT CHANNEL ON UNDERSIDE OF DECK SPANNING BEAMS.
7. 24" X 24" X 12" NEMA 4X ENCLOSURE FOR PANEL B MOUNT TO SUPPORT CHANNEL ON UNDERSIDE OF DECK SPANNING BEAMS.
8. 24" X 24" X 12" NEMA 4X ENCLOSURE FOR FUTURE CBJ NETWORK FIBER CABLE TO BUILDING. MOUNT TO UNDERSIDE OF DECK ON SUPPORT CHANNEL SPANNING BEAMS.
9. 24" X 24" X 12" NEMA 4X ENCLOSURE, MOUNT ON SUPPORT CHANNEL TO UNDERSIDE OF DECK (SAME FOR OTHER ENCLOSURES). ACS TELEPHONE. MOUNT TO UNDERSIDE OF DECK ON SUPPORT CHANNEL SPANNING BEAMS.
10. 24" X 24" X 12" NEMA 4X ENCLOSURE FOR FUTURE LIGHTING/RECEPTACLES IN DECK AREA. MOUNT TO UNDERSIDE OF DECK WITH SUPPORT CHANNEL.
11. 24" X 24" X 12" NEMA 4X ENCLOSURE FOR FUTURE LIGHTING/RECEPTACLES IN DECK AREA. MOUNT TO UNDERSIDE OF DECK WITH SUPPORT CHANNEL.
12. 24" X 24" X 12" NEMA 4X ENCLOSURE FOR FUTURE LIGHTING/RECEPTACLES IN DECK AREA. MOUNT TO UNDERSIDE OF DECK WITH SUPPORT CHANNEL.
13. 24" X 24" X 12" NEMA 4X ENCLOSURE FOR FUTURE CAMERA. MOUNT TO UNDERSIDE OF DECK ON SUPPORT CHANNEL SPANNING BEAMS.
14. 24" X 24" X 12" NEMA 4X ENCLOSURE FOR FUTURE CAMERA. MOUNT TO UNDERSIDE OF DECK ON SUPPORT CHANNEL SPANNING BEAMS.
15. 24" X 24" X 12" NEMA 4X ENCLOSURE FOR FUTURE CAMERA. MOUNT TO UNDERSIDE OF DECK ON SUPPORT CHANNEL SPANNING BEAMS.
16. LIFT STATION CONTROL PANEL, E/ONE, SEE CIVIL. MOUNT TO RACK, DETAIL 2, SHEET E2.03.
17. HEAVY DUTY DISCONNECT, 60A, 600V, 3P, WITH GROUND AND NEUTRAL BARS. NEMA 4X 316 SS ENCLOSURE. MOUNT TO RACK, DETAIL 2, SHEET E2.03.
18. 24" X 24" X 12" NEMA 4X ENCLOSURE FOR LIFT STATION POWER MOUNT TO SUPPORT CHANNEL ON UNDERSIDE OF DECK SPANNING BEAMS.
19. 50/3 MOLDED CASE CIRCUIT BREAKER IN NEMA 3R SS ENCLOSURE. MOUNT TO RACK, DETAIL 1, E2.03

PANEL B		SIZE	VOLTS, PHASE			MOUNTING		MAIN	LOCATION	
		225A	120/208V, 3ϕ, 4W			SURFACE		225/3	RACK ON DECK	
CKT NO.	DESCRIPTION	C/B SIZE	KVA					C/B SIZE	DESCRIPTION	CKT NO.
			CKT	Aϕ	Bϕ	Cϕ	CKT			
1	RECEPTACLE IN DECK (11)	20/1	0.0	0.4			0.4	20/2	CANOPY LIGHTING	2
3	RECEPTACLE IN DECK (11)	20/1	0.0		0.4		0.4	–	–	4
5	RECEPTACLE IN DECK (12)	20/1	0.0			0.5	0.5	20/2	LIGHTING IN PARKING AREA	6
7	RECEPTACLE IN DECK (12)	20/1	0.0	0.5			0.5	–	–	8
9	SPARE		0.0		0.0		0.0	20/2	LUMINAIRES ON DECK (11)	10
11			0.0			0.0	0.0	–	–	12
13			0.0	0.0			0.0	20/2	LUMINAIRES ON DECK (12)	14
15			0.0		0.0		0.0	–	–	16
17			0.0			0.0	0.0	20/1	SPARE	18
19			0.0	0.0			0.0			20
21			0.0		0.0		0.0			22
23			0.0			0.0	0.0			24
25			0.0	0.0			0.0			26
27			0.0		0.0		0.0			28
29			0.0			0.0	0.0			30
31			0.0	0.0			0.0			32
33			0.0		0.0		0.0			34
35			0.0			0.0	0.0			36
37			0.0	0.0			0.0			38
39			0.0		0.0		0.0			40
41			0.0			0.0	0.0			42
TOTAL CONNECTED LOAD = 1.8 KVA/ 5 AMPS				0.9	0.4	0.5				

PANEL MDP		SIZE	VOLTS, PHASE			MOUNTING		MAIN	LOCATION	
		225A	277/480V, 3ϕ, 4W			SURFACE		225/3	RACK ON DECK	
CKT NO.	DESCRIPTION	C/B SIZE	KVA					C/B SIZE	DESCRIPTION	CKT NO.
			CKT	Aϕ	Bϕ	Cϕ	CKT			
1			0.0	1.0			1.0	125/3	PANEL B VIA TRANSFORMER	2
3			0.0		1.0		1.0	–	–	4
5			0.0			1.0	1.0	–	–	6
7			0.0	3.5			3.5	40/2	E/ONE LIFT STATION	8
9			0.0		3.5		3.5	–	–	10
11			0.0			0.0	0.0			12
13			0.0	0.0			0.0			14
15			0.0		0.0		0.0			16
17			0.0			0.0	0.0			18
TOTAL CONNECTED LOAD = 10.0 KVA/ 12 AMPS				4.5	4.5	1.0				

* PANEL MDP IS A PANEL WITH 27 INCHES TOTAL CIRCUIT BREAKER MOUNTING SPACE

CITY & BOROUGH OF JUNEAU DOCKS & HARBORS

MORRIS ENGINEERING GROUP INC
2375 Jordan Avenue #7, Juneau, AK 99801
Phone: 907-789-3350, License: AECL1010

REVISIONS

REV.	DATE	DESCRIPTION	DWN.	CKD.	APP.

PND ENGINEERS, INC.
9360 Glacier Highway Ste 100
Juneau, Alaska 99801
Phone: 907-586-2093
Fax: 907-586-2099
www.pndengineers.com

DESIGN: MGM CHECKED: MGM
DRAWN: JRW APPROVED: MGM
SCALE:

STATE OF ALASKA 49TH
Mark G. Morris
May 23, 2019
No. EE 8613
REGISTERED PROFESSIONAL ENGINEER
DATE: 5/23/2019

DOWNTOWN WATERFRONT IMPROVEMENTS PHASE I
CBJ CONTRACT NO. DH19-014

SHEET TITLE:
EQUIPMENT & PANEL SCHEDULES

PND PROJECT NO.: 182045 | C.A.N. NO.: AECC250

E2.02

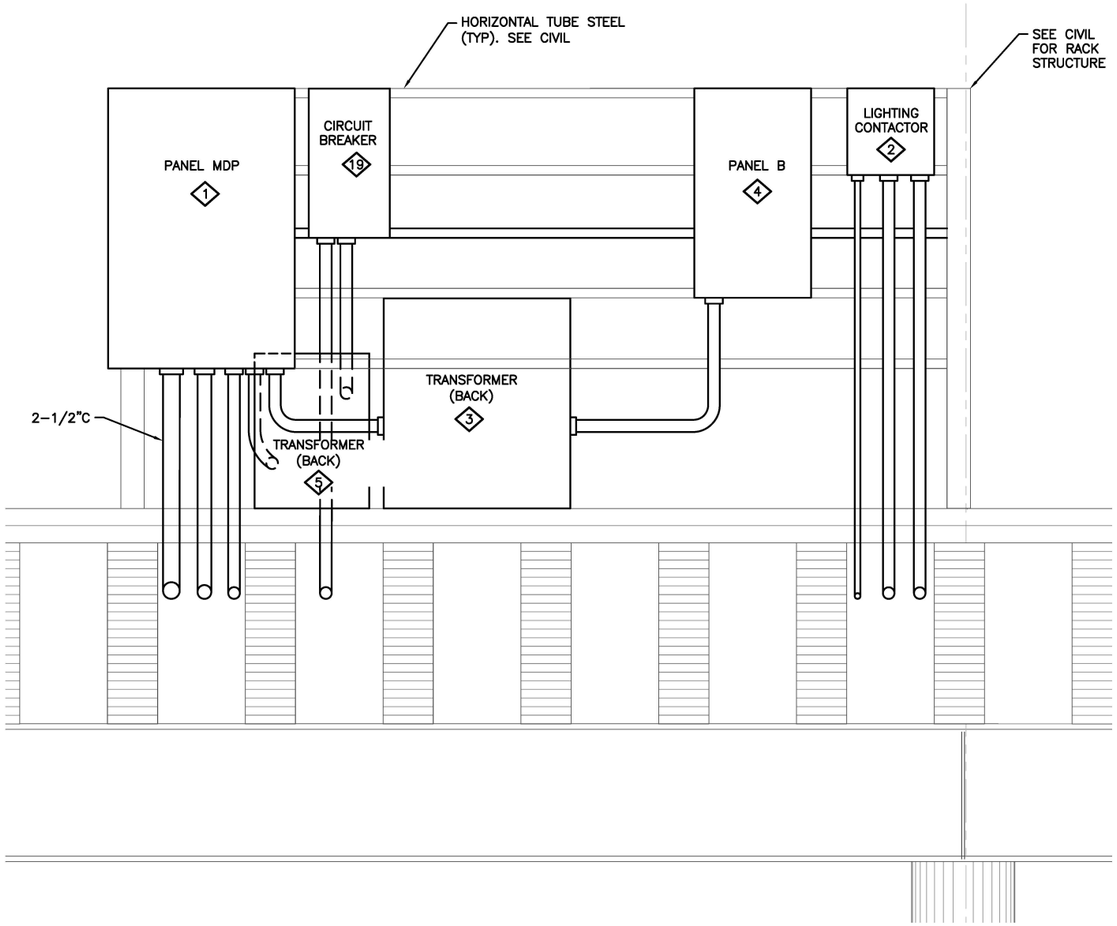

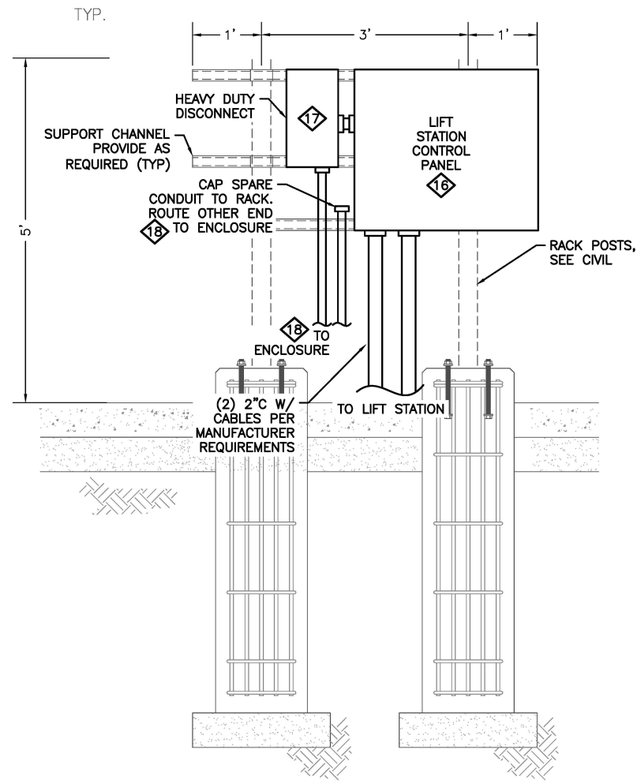

NOTE:

1. SEE EQUIPMENT SCHEDULE, SHEET E2.02 FOR ◇# EQUIPMENT NUMBERS.

① ELECTRICAL RACK ELEVATION — 3" 6" 1' 2'

② LIFT STATION SUPPORT RACK — 3" 6" 1' 2'

CITY & BOROUGH OF JUNEAU — DOCKS & HARBORS

MORRIS ENGINEERING GROUP INC
2375 Jordan Avenue #7, Juneau, AK 99801
Phone: 907-789-3350, License: AECL1010

REVISIONS

REV.	DATE	DESCRIPTION	DWN.	CKD.	APP.

PND ENGINEERS, INC.
9360 Glacier Highway Ste 100
Juneau, Alaska 99801
Phone: 907-586-2093
Fax: 907-586-2099
www.pndengineers.com

DESIGN: MGM CHECKED: MGM
DRAWN: JRW APPROVED: MGM
SCALE:

STATE OF ALASKA — 49TH — Mark G. Morris — May 23, 2019 — No. EE 8613 — REGISTERED PROFESSIONAL ENGINEER
DATE: 5/23/2019

DOWNTOWN WATERFRONT IMPROVEMENTS PHASE I
CBJ CONTRACT NO. DH19-014

SHEET TITLE: **ELECTRICAL RACK ELEVATIONS**

PND PROJECT NO.: 182045 C.A.N. NO.: AECC250

E2.03

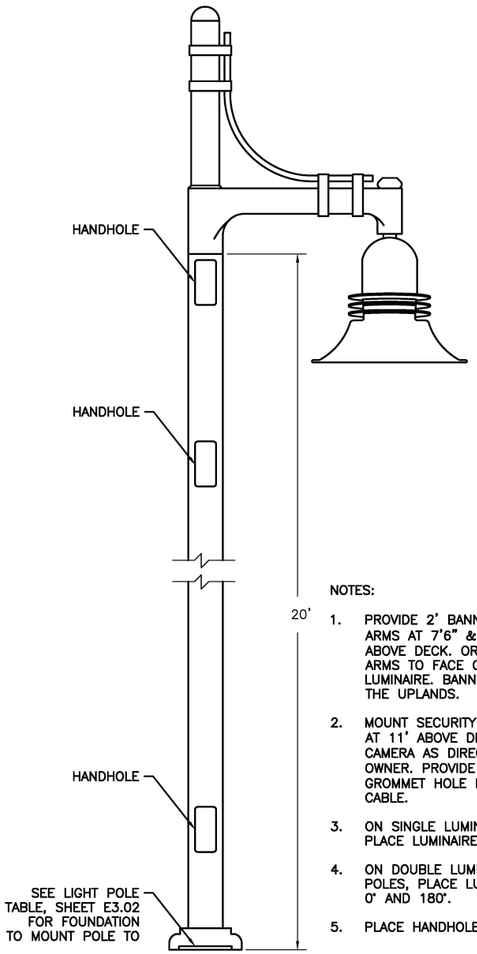

NOTES:

1. PROVIDE 2' BANNER ARMS. ARMS AT 7'6" & 12'6" ABOVE DECK. ORIENT BANNER ARMS TO FACE OPPOSITE LUMINAIRE. BANNERS FACE THE UPLANDS.
2. MOUNT SECURITY CAMERAS AT 11' ABOVE DECK. ORIENT CAMERA AS DIRECTED BY OWNER. PROVIDE 3/4" GROMMET HOLE FOR CAMERA CABLE.
3. ON SINGLE LUMINAIRE POLES, PLACE LUMINAIRE AT 0°.
4. ON DOUBLE LUMINAIRE POLES, PLACE LUMINAIRES AT 0° AND 180°.
5. PLACE HANDHOLES AT 90°.

① TYPE "A" & "B" LUMINAIRE ELEVATION
NO SCALE

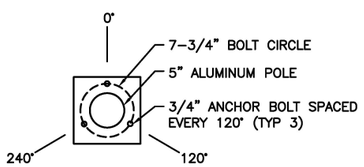

② BOLT CIRCLE DETAIL
NO SCALE

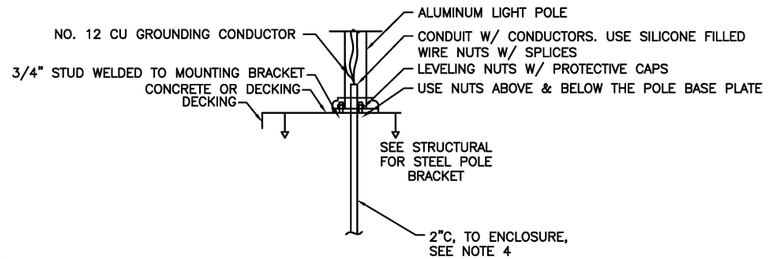

NOTES:

1. COORDINATE WITH OTHER TRADES TO ENSURE THAT THE STUD PATTERN ON THE MOUNTING BRACKET MATCHES LIGHT POLE BASE BOLT HOLES.
2. SPLICE CONDUCTORS INSIDE POLE ADJACENT TO HANDHOLE IF THERE IS ROOM. USE COMPRESSION SPLICES WITH HEAT SHRINK. IF THERE IS NO ROOM IN POLE, SPLICE IN J–BOX.
3. LIGHT POLE MOUNTING BRACKETS CHANGE BASED UPON WHERE ON THE STRINGER THEY ARE LOCATED. COORDINATE WITH DOCK FABRICATOR, INSTALLER, AND GENERAL CONTRACTOR FOR THE LOCATION AND TYPE OF MOUNTING BRACKET TO USE FOR EACH POLE. THE TYPE OF MOUNTING BRACKET CHANGES BASED UPON THE DOCK STRUCTURE. SEE STRUCTURAL SHEET S1.05 FOR THE TYPES OF MOUNTING BRACKETS. SEE TABLE FOR SPECIFIC BRACKET TO BE USED.
4. MOUNT A 12" X 12" X 6" NEMA 4X STAINLESS STEEL ENCLOSURE TO A GLULAM STRINGER BELOW LIGHT POLE FOUNDATION. ROUTE 2" CONDUIT FROM ENCLOSURE UP TO CENTER OF LIGHT POLE.

③ STEEL BRACKET LIGHT POLE BASE DETAIL
NO SCALE

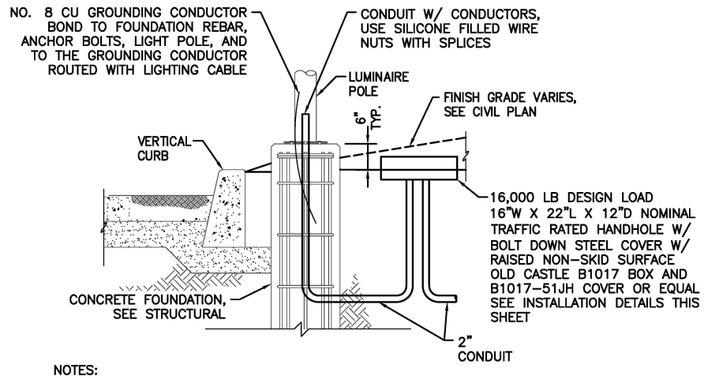

NOTES:

1. SEE CIVIL FOR DETAILS NOT CALLED OUT.
2. PROVIDE 3/4" ANCHOR BOLTS. 24" WITH LARGE WASHERS AT HEAD. ASTM A–36 WITH MINIMUM YIELD STRENGTH OF 36 KIPS. MOUNT POLE TO LEVELING NUTS ON ANCHOR BOLTS.

④ CONCRETE FOUNDATION LIGHT POLE BASE DETAIL
NO SCALE

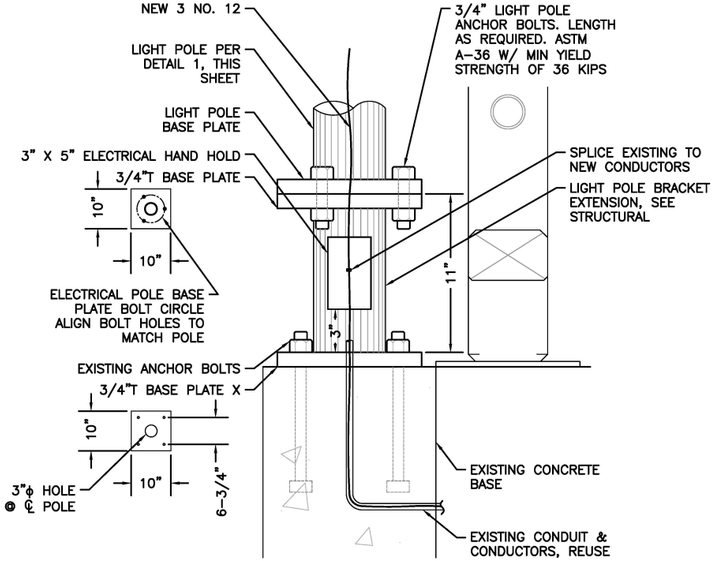

⑤ BRACKET EXTENSION LIGHT POLE BASE DETAIL
NOTE: USE FOR LIGHT POLE NOS. L–17 TO L–29
NO SCALE

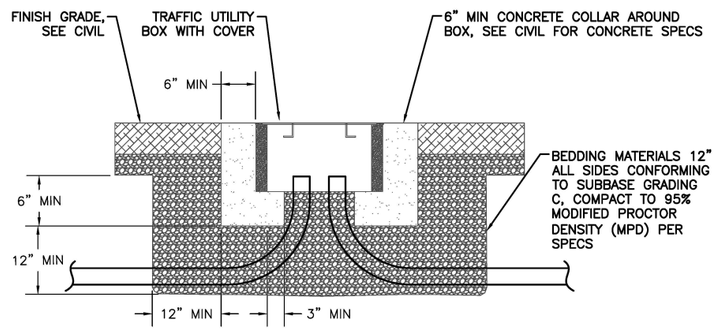

⑥ HANDHOLE DETAIL
NO SCALE

REVISIONS

REV.	DATE	DESCRIPTION	DWN.	CKD.	APP.

CITY & BOROUGH OF JUNEAU — DOCKS & HARBORS

MORRIS ENGINEERING GROUP INC
2375 Jordan Avenue #7, Juneau, AK 99801
Phone: 907-789-3350, License: AECL1010

PND ENGINEERS, INC.
9360 Glacier Highway Ste 100
Juneau, Alaska 99801
Phone: 907-586-2093
Fax: 907-586-2099
www.pndengineers.com

DESIGN: MGM CHECKED: MGM
DRAWN: JRW APPROVED: MGM
SCALE:
DATE: 5/23/2019

STATE OF ALASKA — 49TH — May 23, 2019 — Mark G. Morris — No. EE 8813 — REGISTERED PROFESSIONAL ENGINEER

DOWNTOWN WATERFRONT IMPROVEMENTS PHASE I
CBJ CONTRACT NO. DH19-014

SHEET TITLE: **20' POLE DETAILS**

PND PROJECT NO.: 182045 C.A.N. NO.: AECC250

E3.01

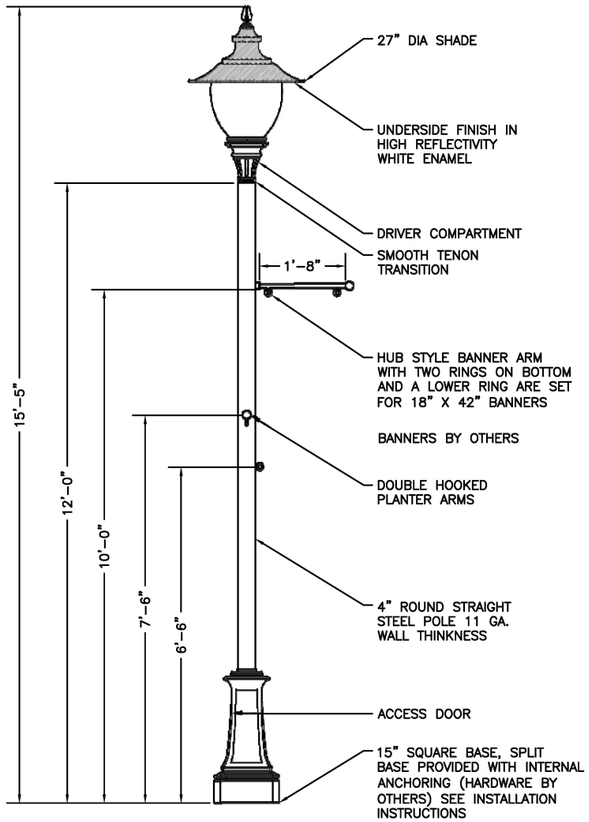

① TYPE "C" LUMINAIRE ELEVATION

4" 8" 16" 32"

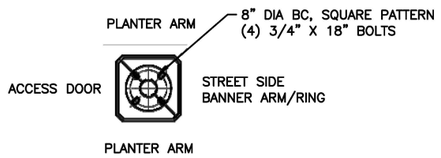

② BOLT CIRCLE DETAIL

4" 8" 16" 32"

LIGHT POLE TABLE

LIGHT POLE NO.	FOUNDATION TYPE (SEE STRUCTURAL)	FOUNDATION DESCRIPTION	REMARKS	BANNER ARMS
L–1	TYPE 6	CONCRETE FOUNDATION	SEE SHEET E3.01, DETAILS 1 & 4	NO
L–2	TYPE 4	CONCRETE FOUNDATION	SEE SHEET E3.01, DETAILS 1 & 4	NO
L–3	TYPE 4	CONCRETE FOUNDATION	SEE SHEET E3.01, DETAILS 1 & 4	NO
L–4	TYPE 5	STEEL BRACKET	SEE SHEET E3.01, DETAILS 1 & 3	NO
L–5	TYPE 3	STEEL BRACKET	SEE SHEET E3.01, DETAILS 1 & 3	YES
L–6	TYPE 3	STEEL BRACKET	SEE SHEET E3.01, DETAILS 1 & 3	YES
L–7	TYPE 3	STEEL BRACKET	SEE SHEET E3.01, DETAILS 1 & 3	YES
L–8	TYPE 3	STEEL BRACKET	SEE SHEET E3.01, DETAILS 1 & 3	YES
L–9	TYPE 3	STEEL BRACKET	SEE SHEET E3.01, DETAILS 1 & 3	YES
L–10	TYPE 3	STEEL BRACKET	SEE SHEET E3.01, DETAILS 1 & 3	YES
L–11	TYPE 1	STEEL BRACKET	SEE SHEET E3.01, DETAILS 1 & 3	NO
L–12	TYPE 1	STEEL BRACKET	SEE SHEET E3.01, DETAILS 1 & 3	NO
L–13	TYPE 1 SIM	STEEL BRACKET	SEE SHEET E3.01, DETAILS 1 & 3	NO
L–14	TYPE 7	CONCRETE FOUNDATION	SEE SHEET E3.01, DETAILS 1 & 4 **	NO
L–15	TYPE 7	CONCRETE FOUNDATION	SEE SHEET E3.01, DETAILS 1 & 4	NO
L–16	TYPE 6	CONCRETE FOUNDATION	SEE SHEET E3.01, DETAIL 4 & DETAIL 1, THIS SHEET	YES
L–17	TYPE 3	BRACKET EXTENSION	SEE SHEET E3.01, DETAILS 1 & 5	YES
L–18	TYPE 3	BRACKET EXTENSION	SEE SHEET E3.01, DETAILS 1 & 5	YES
L–19	TYPE 3	BRACKET EXTENSION	SEE SHEET E3.01, DETAILS 1 & 5	YES
L–20	TYPE 3	BRACKET EXTENSION	SEE SHEET E3.01, DETAILS 1 & 5	YES
L–21	TYPE 3	BRACKET EXTENSION	SEE SHEET E3.01, DETAILS 1 & 5	YES
L–22	TYPE 3	BRACKET EXTENSION	SEE SHEET E3.01, DETAILS 1 & 5	YES
L–23	TYPE 3	BRACKET EXTENSION	SEE SHEET E3.01, DETAILS 1 & 5	YES
L–24	TYPE 3	BRACKET EXTENSION	SEE SHEET E3.01, DETAILS 1 & 5	YES
L–25	TYPE 3	BRACKET EXTENSION	SEE SHEET E3.01, DETAILS 1 & 5	YES
L–26	TYPE 3	BRACKET EXTENSION	SEE SHEET E3.01, DETAILS 1 & 5	YES
L–27	TYPE 3	BRACKET EXTENSION	SEE SHEET E3.01, DETAILS 1 & 5	YES
L–28	TYPE 3	BRACKET EXTENSION	SEE SHEET E3.01, DETAILS 1 & 5	YES
L–29	TYPE 3	BRACKET EXTENSION	SEE SHEET E3.01, DETAILS 1 & 5	YES

** NO HANDHOLE

LUMINAIRE SCHEDULE

TYPE	DESCRIPTION	MANUFACTURER	LAMPS	REMARKS
A	20' LIGHT POLE, ARM, & LUMINAIRE WITH FLUTED FULL CUTOFF SHADE, TYPE III DISTRIBUTION, BLACK	COOPER INVUE EPIC MEDIUM MODERN SERIES EMM–E04–LED–E1–T3–SR–FL–BK–8030 W/VA6110–BK (SINGLE ARM) OR VA6117–BK (DOUBLE ARM) AND ARX–ST12–NGN4 ALUMINUM POLE	LED, 3,000K, 80 CRI, 11,700 LUMENS	NO SUBSTITUTIONS, PROVIDE WITH 120–277V DRIVER. MOUNT SECURITY CAMERAS TO POLE AT 11' AFG, USE CAMERA POLE MOUNT BRACKET WITH STAINLESS STEEL BAND, SEE DETAIL. MOUNT BANNER ARMS AT 12'6" & 7'6", SEE DETAILS.
B	20' LIGHT POLE, ARM, & LUMINAIRE WITH FLUTED FULL CUTOFF SHADE, TYPE IV DISTRIBUTION, BLACK	COOPER INVUE EPIC MEDIUM MODERN SERIES EMM–E04–LED–E1–T4–SR–FL–BK–8030 W/VA6110–BK (SINGLE ARM) OR VA6117–BK (DOUBLE ARM) AND ARX–ST12–NGN4 ALUMINUM POLE	LED, 3,000K, 80 CRI, 11,500 LUMENS	NO SUBSTITUTIONS, PROVIDE WITH 120–277V DRIVER. MOUNT SECURITY CAMERAS TO POLE AT 11' AFG, USE CAMERA POLE MOUNT BRACKET WITH STAINLESS STEEL BAND, SEE DETAIL. MOUNT BANNER ARMS AT 12'6" & 7'6", SEE DETAILS.
C	12' LIGHT POLE W/ POLYCARBONATE ACORN STYLE LED, TYPE III DISTRIBUTOR	STERNBERG LIGHTING M960SRLED–4ARC45T4–MDL03–P/BKT LITE	LED, 3,500K, 5,500 LUMENS, 64 WATTS	MOUNT TO CONCRETE BASE WITH PLANTER ARMS & BANNER ARM PER DETAIL 3, SHEET E3.02
D	TRADITIONAL WALL MOUNTED ARM WITH 45° STAP & LUMINAIRE WITH FLUTED FULL CUTOFF SHADE, TYPE III DISTRIBUTION, BLACK	COOPER INVUE EPIC MEDIUM MODERN SERIES EMM–E04–LED–E1–T3–SR–FL–BK–8030 W/VA6153–BK WITH TRADITIONAL WALL MOUNT ARM WITH 45° STRAP	LED, 3,000K, 80 CRI, 11,500 LUMENS	NO SUBSTITUTIONS. 120/277V DRIVER, WALL MOUNT TO PARKING GARAGE STRUCTURE.
F	1–3/4" DOWNLIGHT WITH ROUND ACRYLIC ACCESSORY. 1.31" X 2.8" DIAMETER TRIM, FROSTED ACRYLIC INSIDE, POLISHED OUTSIDE	CALCULITE FRAME: C2L–09–DL–935–R–Z10U DECORATIVE ELEMENT: D2L–R02	LED, 3,500K 900 LUMENS, 90 CRI	120–277V DRIVER, COORDINATE WITH SOFFIT INSTALLATION FOR CUTTING HOLES IN SOFFIT AND FLUSH MOUNTING. VERIFY CORRECT PARTS ARE BID AND ORDERED FOR A FLUSH INSTALLATION.

CITY & BOROUGH OF JUNEAU DOCKS & HARBORS

MORRIS ENGINEERING GROUP INC
2375 Jordan Avenue #7, Juneau, AK 99801
Phone: 907-789-3350, License: AECL1010

REVISIONS

REV.	DATE	DESCRIPTION	DWN.	CKD.	APP.

PND ENGINEERS, INC.
9360 Glacier Highway Ste 100
Juneau, Alaska 99801
Phone: 907-586-2093
Fax: 907-586-2099
www.pndengineers.com

DESIGN: MGM CHECKED: MGM
DRAWN: JRW APPROVED: MGM
SCALE:

STATE OF ALASKA 49TH
Mark G. Morris
May 23, 2019
No. EE 8613
REGISTERED PROFESSIONAL ENGINEER
DATE: 5/23/2019

DOWNTOWN WATERFRONT IMPROVEMENTS PHASE I
CBJ CONTRACT NO. DH19-014

SHEET TITLE:
12' POLE DETAILS, LIGHT POLE TABLE & LUMINAIRE SCHEDULE

PND PROJECT NO.: 182045 C.A.N. NO.: AECC250

E3.02

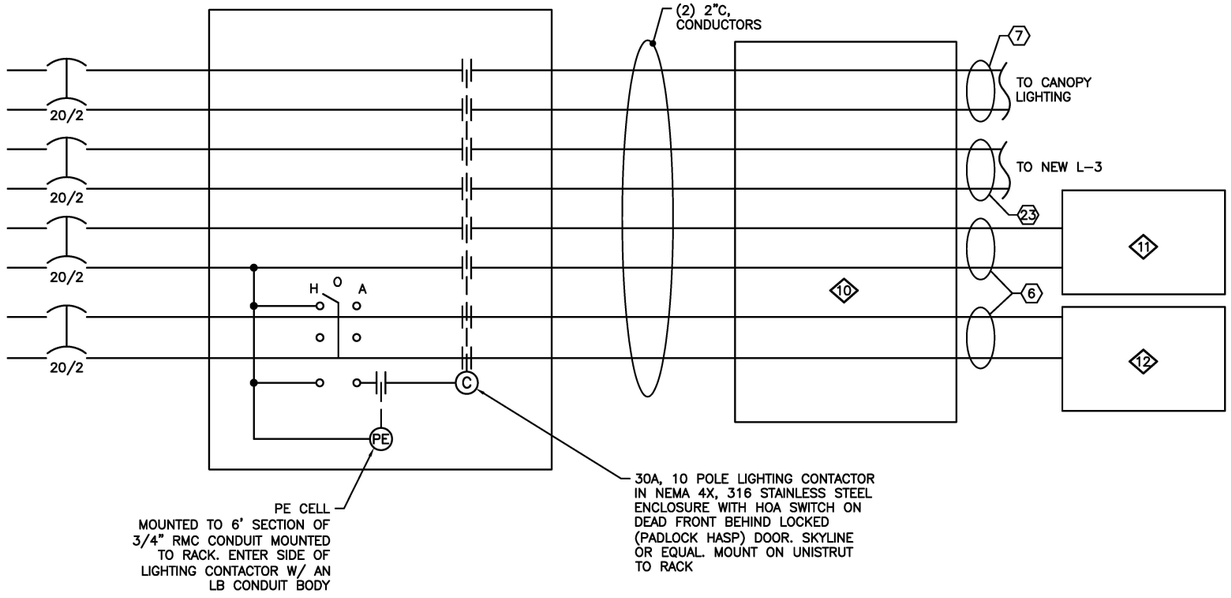

1 SITE LIGHTING CONTROL SCHEMATIC
NOT TO SCALE

NOTES:

1. SEE SHEET E1.02 FOR ⟨#⟩
2. SEE EQUIPMENT SCHEDULE, SHEET E2.02 FOR ⟨#⟩ EQUIPMENT NUMBERS.

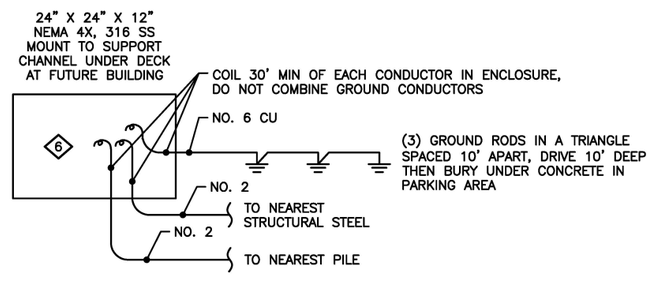

2 FUTURE BUILDING POWER SINGLE LINE DIAGRAM
NOT TO SCALE

REVISIONS

REV.	DATE	DESCRIPTION	DWN.	CKD.	APP.

CITY & BOROUGH OF JUNEAU DOCKS & HARBORS
MORRIS ENGINEERING GROUP INC
2375 Jordan Avenue #7, Juneau, AK 99801
Phone: 907-789-3350, License: AECL1010
PND ENGINEERS, INC.
9360 Glacier Highway Ste 100
Juneau, Alaska 99801
Phone: 907-586-2093
Fax: 907-586-2099
www.pndengineers.com

DESIGN: MGM CHECKED: MGM
DRAWN: JRW APPROVED: MGM
SCALE: NTS
DATE: 5/23/2019

STATE OF ALASKA 49TH Mark G. Morris May 23, 2019 No. EE 8813 REGISTERED PROFESSIONAL ENGINEER

DOWNTOWN WATERFRONT IMPROVEMENTS PHASE I
CBJ CONTRACT NO. DH19-014

SHEET TITLE: LTG CONTROL SCHEMATIC & FUTURE POWER SINGLE LINE

PND PROJECT NO.: 182045 C.A.N. NO.: AECC250

E3.03

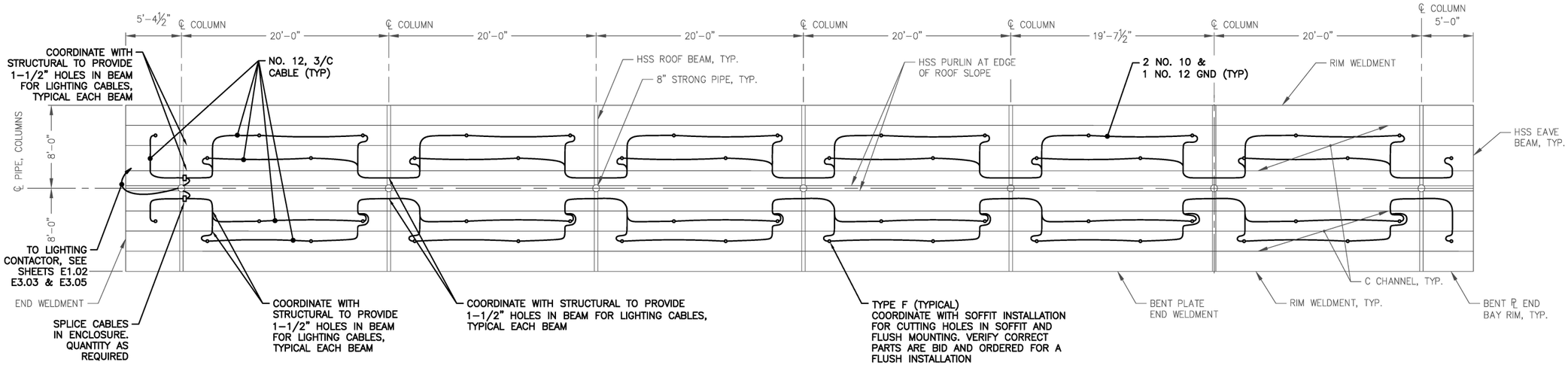

NOTE:

1. ROUTE CONDUIT UNDER DECK, STUB UP INTO COLUMN. SPLICE TO (2) NO. 12, 3/C TYPE 500W OR G-GC CABLE AT HANDHOLE. SEE STRUCTURAL DRAWINGS FOR CANOPY.

① PARKING CANOPY PLAN - ELECTRICAL

30" 5' 10'

CITY & BOROUGH OF JUNEAU DOCKS & HARBORS

MORRIS ENGINEERING GROUP INC
2375 Jordan Avenue #7, Juneau, AK 99801
Phone: 907-789-3350, License: AECL1010

REVISIONS

REV.	DATE	DESCRIPTION	DWN.	CKD.	APP.

PND ENGINEERS, INC.
9360 Glacier Highway Ste 100
Juneau, Alaska 99801
Phone: 907-586-2093
Fax: 907-586-2099
www.pndengineers.com

DESIGN: MGM CHECKED: MGM
DRAWN: JRW APPROVED: MGM
SCALE:

STATE OF ALASKA 49TH
Mark G. Morris
May 23, 2019
No. EE 8813
REGISTERED PROFESSIONAL ENGINEER
DATE: 5/23/2019

DOWNTOWN WATERFRONT IMPROVEMENTS PHASE I
CBJ CONTRACT NO. DH19-014

SHEET TITLE: **PARKING CANOPY PLAN - ELECTRICAL**

PND PROJECT NO.: 182045 C.A.N. NO.: AECC250

E3.04

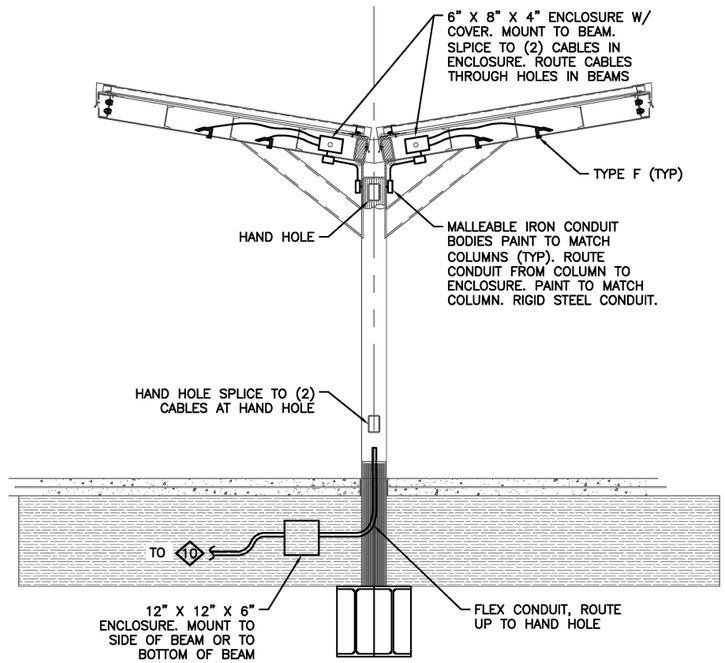

1 TYPICAL PARKING CANOPY SECTION
NOT TO SCALE

CITY & BOROUGH OF JUNEAU DOCKS & HARBORS

MORRIS ENGINEERING GROUP INC
2375 Jordan Avenue #7, Juneau, AK 99801
Phone: 907-789-3350, License: AECL1010

REVISIONS

REV.	DATE	DESCRIPTION	DWN.	CKD.	APP.

PND ENGINEERS, INC.
9360 Glacier Highway Ste 100
Juneau, Alaska 99801
Phone: 907-586-2093
Fax: 907-586-2099
www.pndengineers.com

DESIGN: MGM CHECKED: MGM
DRAWN: JRW APPROVED: MGM
SCALE:

STATE OF ALASKA 49TH
Mark G. Morris
May 23, 2019
No. EE 8613
REGISTERED PROFESSIONAL ENGINEER
DATE: 5/23/2019

DOWNTOWN WATERFRONT IMPROVEMENTS PHASE I
CBJ CONTRACT NO. DH19-014

SHEET TITLE:
PARKING CANOPY SECTIONS AND DETAILS - ELECTRICAL

PND PROJECT NO.: 182045 C.A.N. NO.: AECC250

E3.05

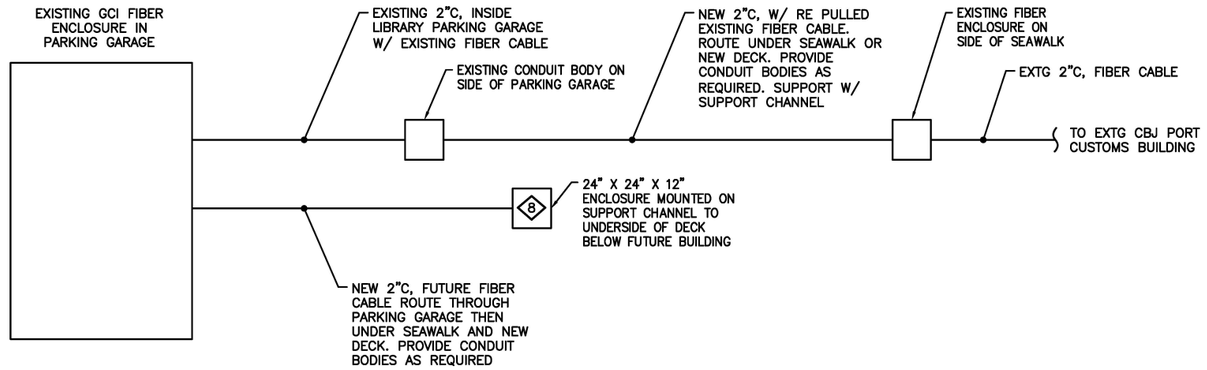

NOTES:

1. COORDINATE WITH GCI AND CBJ MIS TO DISCONNECT AND PULL OUT FIBER CABLE BACK TO EXISTING ENCLOSURE, THEN PULL BACK IN TO RECONNECT IN GCI ENCLOSURE. ARRANGE WITH GCI TO ALLOW CBJ TO USE SEVERAL STRANDS TO SET UP A CONNECTION TO THE FUTURE BUILDING.
2. SEE EQUIPMENT SCHEDULE, SHEET E2.02 FOR ⟨#⟩ EQUIPMENT NUMBERS.

① FIBER CABLE RISER DIAGRAM DIAGRAM
NOT TO SCALE

CITY & BOROUGH OF JUNEAU DOCKS & HARBORS

MORRIS ENGINEERING GROUP INC
2375 Jordan Avenue #7, Juneau, AK 99801
Phone: 907-789-3350, License: AECL1010

REVISIONS

REV.	DATE	DESCRIPTION	DWN.	CKD.	APP.

PND ENGINEERS, INC.
9360 Glacier Highway Ste 100
Juneau, Alaska 99801
Phone: 907-586-2093
Fax: 907-586-2099
www.pndengineers.com

DESIGN: MGM CHECKED: MGM
DRAWN: JRW APPROVED: MGM
SCALE: NTS

STATE OF ALASKA 49TH
Mark G. Morris
May 23, 2019
No. EE 8613
REGISTERED PROFESSIONAL ENGINEER
DATE: 5/23/2019

DOWNTOWN WATERFRONT IMPROVEMENTS PHASE I
CBJ CONTRACT NO. DH19-014

SHEET TITLE:
FIBER CABLE RISER DIAGRAM

PND PROJECT NO.: 182045 C.A.N. NO.: AECC250

E4.01

NOTES:

1. SEE EQUIPMENT SCHEDULE, SHEET E2.02 FOR ◇# EQUIPMENT NUMBERS.

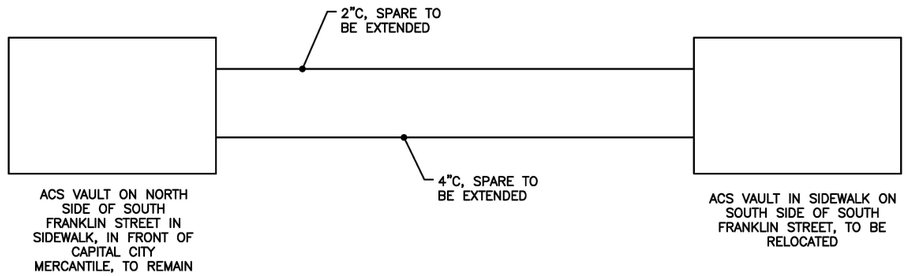

① EXISTING ACS TELEPHONE RISER DIAGRAM
NOT TO SCALE

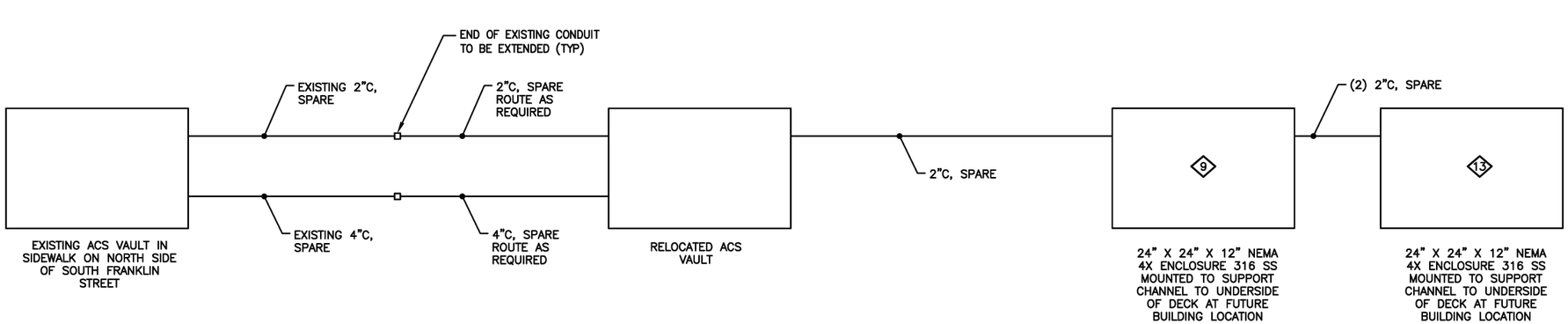

② NEW ACS TELEPHONE RISER DIAGRAM
NOT TO SCALE

CITY & BOROUGH OF JUNEAU DOCKS & HARBORS

MORRIS ENGINEERING GROUP INC
2375 Jordan Avenue #7, Juneau, AK 99801
Phone: 907-789-3350, License: AECL1010

REVISIONS

REV.	DATE	DESCRIPTION	DWN.	CKD.	APP.

PND ENGINEERS, INC.
9360 Glacier Highway Ste 100
Juneau, Alaska 99801
Phone: 907-586-2093
Fax: 907-586-2099
www.pndengineers.com

DESIGN: MGM CHECKED: MGM
DRAWN: JRW APPROVED: MGM
SCALE: NTS

STATE OF ALASKA 49TH
Mark G. Morris
May 23, 2019
No. EE 8613
REGISTERED PROFESSIONAL ENGINEER
DATE: 5/23/2019

DOWNTOWN WATERFRONT IMPROVEMENTS PHASE I
CBJ CONTRACT NO. DH19-014

SHEET TITLE:
EXISTING & NEW ACS RISER DIAGRAM

PND PROJECT NO.: 182045 C.A.N. NO.: AECC250

E4.02

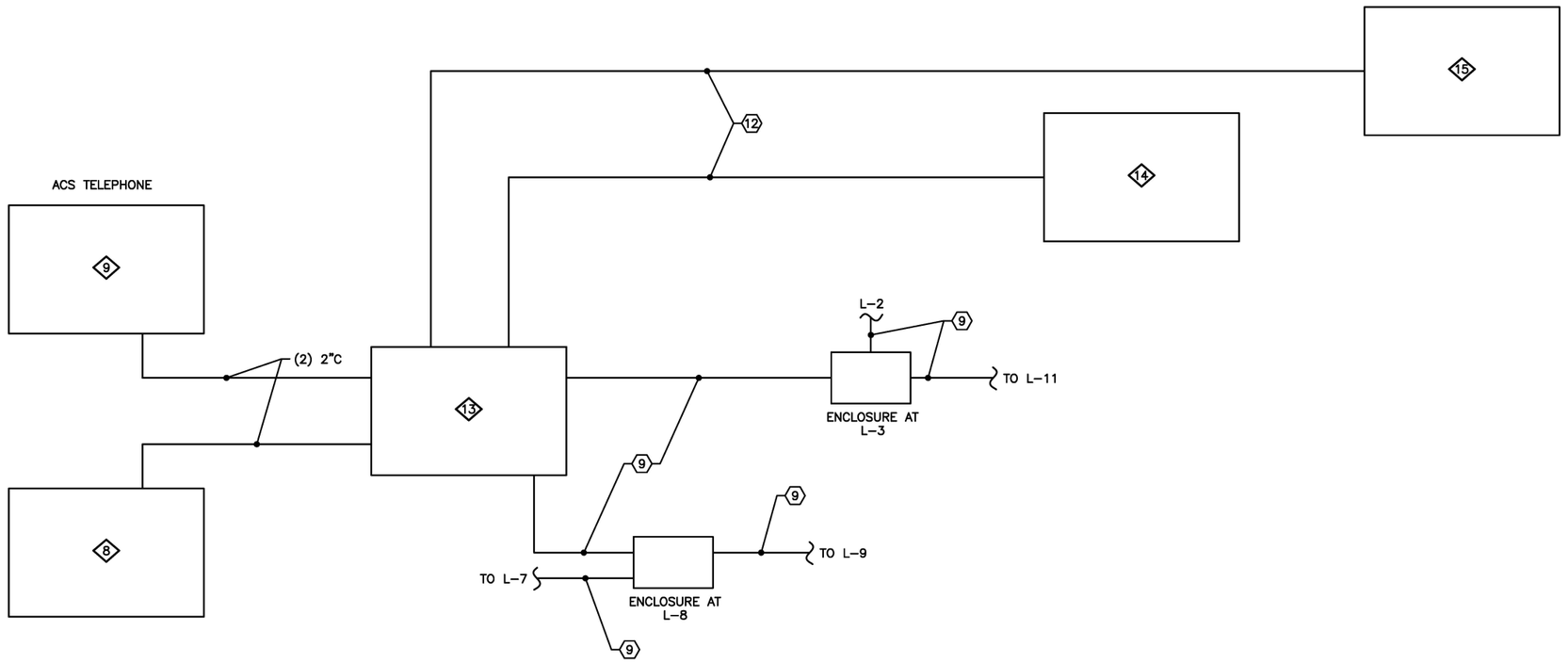

1 SCHEMATIC FOR CAMERAS
NOT TO SCALE

NOTES:

1. CAMERAS TO BE INSTALLED IN FUTURE. CONDUIT, ENCLOSURES, ETC. TO BE INSTALLED IN THIS PROJECT.
2. SEE SHEET E1.02 FOR KEY NOTES.
3. SEE EQUIPMENT SCHEDULE, SHEET E2.02 FOR ◇# EQUIPMENT NUMBERS.

CITY & BOROUGH OF JUNEAU DOCKS & HARBORS

MORRIS ENGINEERING GROUP INC
2375 Jordan Avenue #7, Juneau, AK 99801
Phone: 907-789-3350, License: AECL1010

REVISIONS

REV.	DATE	DESCRIPTION	DWN.	CKD.	APP.

PND ENGINEERS, INC.
9360 Glacier Highway Ste 100
Juneau, Alaska 99801
Phone: 907-586-2093
Fax: 907-586-2099
www.pndengineers.com

DESIGN: MGM CHECKED: MGM
DRAWN: JRW APPROVED: MGM
SCALE:
DATE: 5/23/2019

STATE OF ALASKA 49TH
Mark G. Morris
May 23, 2019
No. EE 8613
REGISTERED PROFESSIONAL ENGINEER

DOWNTOWN WATERFRONT IMPROVEMENTS PHASE I
CBJ CONTRACT NO. DH19-014

SHEET TITLE:
CAMERA SCHEMATIC

PND PROJECT NO.: 182045 C.A.N. NO.: AECC250

E4.03

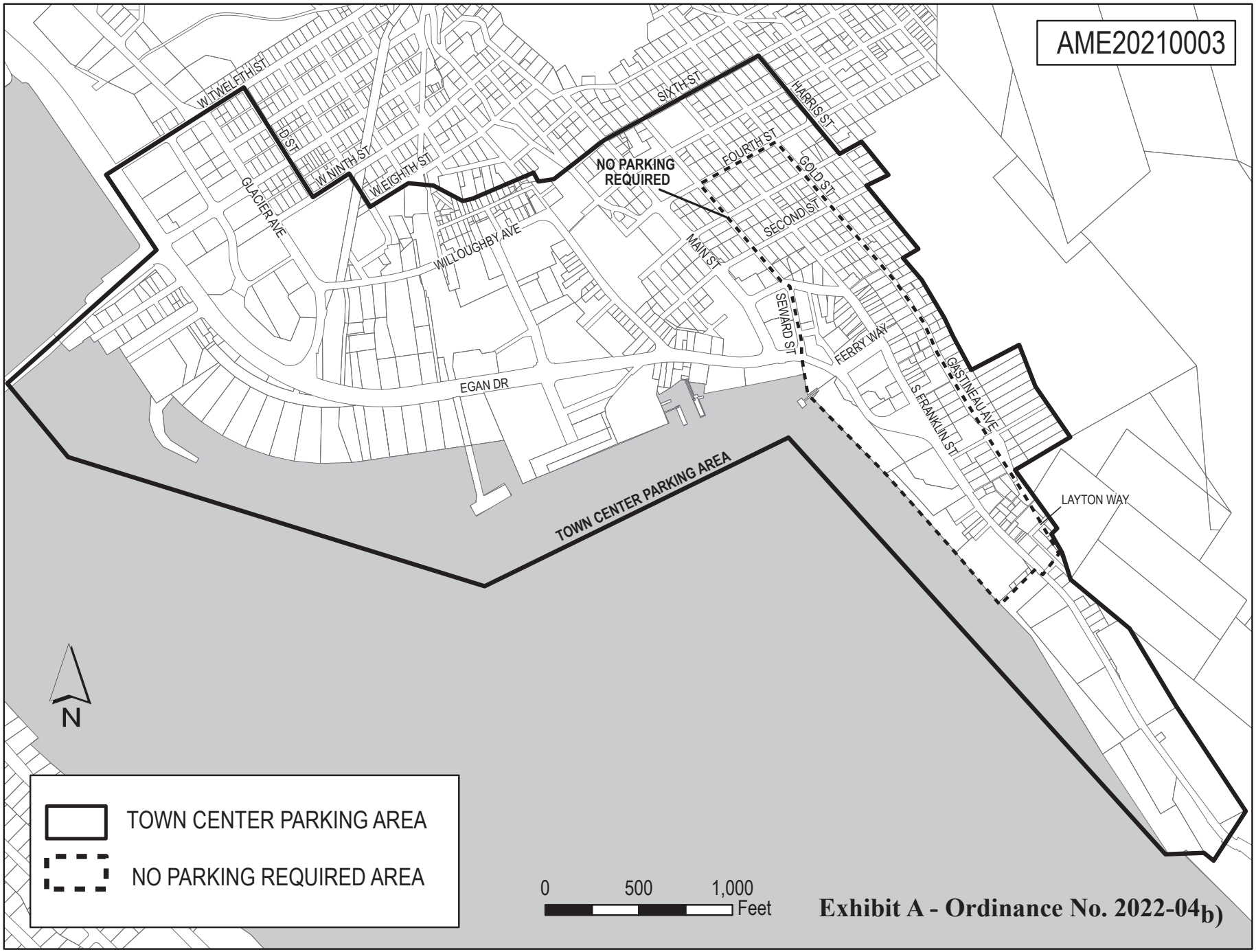

ArcMap Source: P:\quinn\Projects\LAW\ame20210003.mxd
Revised 4/12/2022

Attachment H – No Parking Required Area Map

CITY AND BOROUGH OF JUNEAU
ALASKA'S CAPITAL CITY
COMMUNITY DEVELOPMENT

Historic Resources Advisory Committee
(907) 586-0715
hrac@juneau.org
www.juneau.org/community-development/hrac
155 S. Seward Street • Juneau, AK 99801

February 5, 2026

Reuben Willis, Applicant
251 South Franklin Street, Juneau, Alaska 99801
Juneau Alaska 99801'

RE: proposed Alaska Fly & Dive project, 356 S. Franklin Street

Dear Reuben,

Thank you for bringing your project to our Historic Advisory Committee (HRAC) on February 4, 2026. We greatly appreciate your willingness to work with the Committee.

The proposed project meets historic guidelines and the Committee voted unanimously to recommend approval for this project. Your attention to detail and adherence to historical design features is impressive.

Again, thank you very much for bringing your project to our committee.

Regards,

Dorene Lorenz, Chair

CITY AND BOROUGH OF JUNEAU
ALASKA'S CAPITAL CITY
COMMUNITY DEVELOPMENT

(907) 586-0715
CDD_Admin@juneau.gov
www.juneau.org/community-development
155 Heritage Way • Juneau, AK 99801

COMMUNITY DEVELOPMENT DEPARTMENT - REQUEST FOR AGENCY COMMENT

DEPARTMENT: CDD – Building Division

STAFF PERSON/TITLE: Jeff Hedges, Building Code Official

DATE: 01/28/2026

APPLICANT: Reuben Willis

TYPE OF APPLICATION: Conditional Use Permit (USE2025 0013), Variance (VAR2025 0008), and Variance (VAR2025 0009)

PROJECT DESCRIPTION:

USE2025 0013: Conditional Use Permit to construct a 38,000-square-foot entertainment and retail building containing three theaters, a retail store, and associated office and support spaces.

VAR2025 0008: Variance to reduce the west side yard setback from 10 feet to 0 feet for a length of 60 feet.

VAR2025 0009: Variance to extend the Waterfront Commercial height limit from 35 feet to 38 feet, and from 35 feet to 54 feet for an area of 5,800 square-feet to accommodate a flying theater.

LEGAL DESCRIPTION: Archipelago Lot 1A

PARCEL NUMBER(S): 1C070K830022

PHYSICAL ADDRESS: 356 S. Franklin St.

SPECIFIC QUESTIONS FROM PLANNER:

N/A

AGENCY COMMENTS:

Since there is a ROW that is greater than 10' wide on the West side yard, the Building Division has no issues with this project.

CITY AND BOROUGH OF JUNEAU
ALASKA'S CAPITAL CITY
COMMUNITY DEVELOPMENT

(907) 586-0715
CDD_Admin@juneau.gov
www.juneau.org/community-development
155 Heritage Way • Juneau, AK 99801

COMMUNITY DEVELOPMENT DEPARTMENT - REQUEST FOR AGENCY COMMENT

DEPARTMENT: Fire

STAFF PERSON/TITLE: Theresa Ross, Fire Marshal

DATE: 01/28/2026

APPLICANT: Reuben Willis

TYPE OF APPLICATION: Conditional Use Permit (USE2025 0013), Variance (VAR2025 0008), and Variance (VAR2025 0009)

PROJECT DESCRIPTION:

USE2025 0013: Conditional Use Permit to construct a 38,000-square-foot entertainment and retail building containing three theaters, a retail store, and associated office and support spaces.

VAR2025 0008: Variance to reduce the west side yard setback from 10 feet to 0 feet for a length of 60 feet.

VAR2025 0009: Variance to extend the Waterfront Commercial height limit from 35 feet to 38 feet, and from 35 feet to 54 feet for an area of 5,800 square-feet to accommodate a flying theater.

LEGAL DESCRIPTION: Archipelago Lot 1A

PARCEL NUMBER(S): 1C070K830022

PHYSICAL ADDRESS: 356 S. Franklin St.

SPECIFIC QUESTIONS FROM PLANNER:

AGENCY COMMENTS:

Placement of the structure must meet 2024 IFC Appendix D, sections D104 & D105 should be addressed early on.

Invitation to Comment

On a proposal to be heard by the CBJ Planning Commission

Your Community, Your Voice

REVISED NOTICE

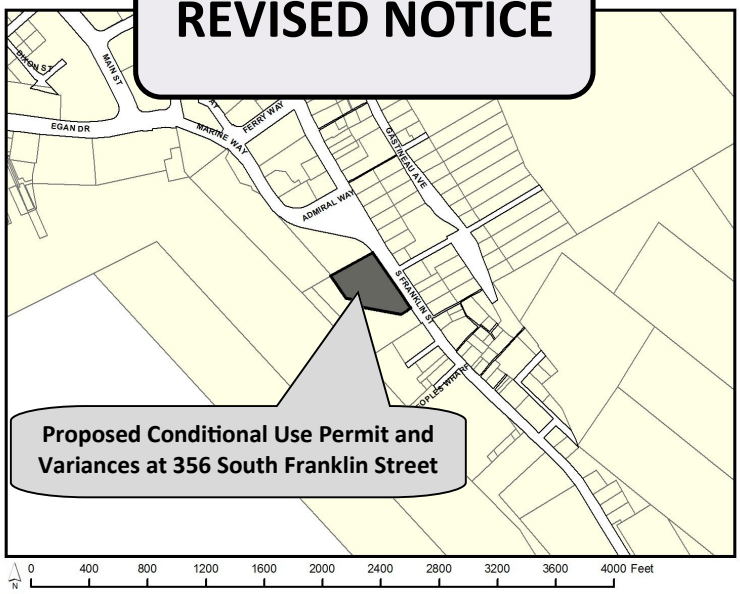

CITY AND BOROUGH OF JUNEAU
ALASKA'S CAPITAL CITY
COMMUNITY DEVELOPMENT
155 Heritage Way Juneau, Alaska 99801

TO

A Conditional Use Permit has been submitted for consideration and public hearing by the Planning Commission to **construct a 38,000-square foot entertainment and retail building** at **356 South Franklin Street** in a **Waterfront Commercial** zone. **THEN:**

Variance to reduce west side yard setback. **- AND -** **Variance** to extend Waterfront Commercial height limit.

PROJECT INFORMATION:
Project Information can be found at:
https://juneau.org/community-development/short-term-projects

PLANNING COMMISSION DOCUMENTS:
Staff Report expected to be posted **Tuesday, February 17, 2026** at
https://juneau.org/community-development/planning-commission
Find hearing results, meeting minutes, and more here, as well.

Now through Feb. 2	Feb. 3— noon, Feb. 20	HEARING DATE & TIME: 6:00 pm, Feb. 24, 2026	Feb. 25
Comments received during this period will be sent to the Planner, **Justin Smith,** to be included as an attachment in the staff report.	Comments received during this period will be sent to Commissioners to read in preparation for the hearing.	This meeting will be held in person and by remote participation. For remote participation: join the Webinar by visiting https://juneau.zoom.us/j/86847221296 and use the Webinar ID: 868 4722 1296 OR join by telephone, calling: 1-253-215-8782 and enter the Webinar ID (above). You may also participate in person in City Hall Assembly Chambers, 155 Heritage Way Juneau, Alaska.	The results of the hearing will be posted online.

FOR DETAILS OR QUESTIONS,

Phone: **(907)586-0753 ext. 4129**
Email: **pc_comments@juneau.gov or Justin.Smith@juneau.gov**
Mail: **Community Development, 155 Heritage Way, Juneau AK 99801**

Printed January 23, 2026

Case No.: USE2025 0013, VAR2025 0008, VAR2025 0009
Parcel No.: 1C070K830022
CBJ Parcel Viewer: http://epv.juneau.org



Attachment L – Public Notice Sign Photo

Additional Materials

Regular Planning Commission Meeting

Assembly Chambers
6:00pm
Meeting Date: February 24, 2026

---

1. **USE2025 0013, VAR2025 0008, VAR2025 0009:**
   a. Letter of Support: Juneau Chamber of Commerce, received 2/12/2026.
   b. Letter of Support: Travel Juneau, received 2/17/2026.
   c. Letter of Support: Juneau Downtown Business Association, received 2/17/2026.
   d. Letter of Support: Juneau Economic Development Council, received 2/17/2026.
   e. Letter of Support: Society of St. Vincent de Paul, received 2/17/2026.
   f. Public comment: Heather Holt received 2/4/2026.
   g. Public comment: Maricel Bohulano, received 2/5/2026.
   h. Public comment: Marlla Cabrigas, received 2/6/2026.
   i. MEMO: Justin Smith CDD Planner, received 2/20/2026.
   j. Presentation: Corey Wall, received 2/20/2026.

JUNEAU
CHAMBER OF COMMERCE

BOARD MEMBERS

Corey Baxter
President
IUOE Local 302
Alec Mesdag
President Elect
AEL&P
Benjamin Brown
Past President
Perseverance Theatre
Jodi Garza
Secretary
Alaska Seaplanes
Mark Mesdag
Treasurer
Elgee Rehfeld, LLC
Angie Nolan
Alaska Unlimited Realty
Aparna Palmer
University of AK-SE
Chelsea Flint
Hecla Greens Creek
Drew Green
CLAA
Eric Forst
Red Dog Saloon
John Blasco
Anchorage Distillery LLC
Laura McDonnell
Caribou Crossings
Marc Guevarra
First National Bank Alaska
Ray Thibodeau
Alaska Marine Lines
Sara Race
Gartner

February 9, 2026

To the Planning Commission,

The Greater Juneau Chamber of Commerce is writing to express support for the City and Borough of Juneau's consideration of a height variance associated with a proposed private-sector development in downtown Juneau.

The Chamber advocates for policies and regulatory decisions that support private-sector investment, tourism infrastructure, and a resilient, year-round economy. Juneau's economy depends on continued private investment in its downtown core and in infrastructure that supports year-round visitor activity. Weather-independent attractions and immersive visitor experiences help stabilize economic activity beyond peak tourism months, support local businesses, and strengthen the commercial tax base. Projects of this nature are difficult to realize without a regulatory framework that allows for flexibility and thoughtful consideration of site-specific constraints.

For these reasons, the Chamber supports the City's willingness to consider reasonable exceptions to height restrictions when they are consistent with adopted land-use plans and advance broader economic and community goals. Predictable processes and a practical approach to variances are critical to attracting private capital and encouraging development on taxable lands—both of which are long-standing Chamber priorities.

We appreciate the Planning Commission's role in evaluating this request and encourage a decision-making approach that recognizes the importance of private-sector development and tourism infrastructure to Juneau's long-term economic health. The Chamber remains available as a resource as this project and others move through the public process.

Sincerely,

Corey Baxter
Board President
Greater Juneau Chamber of Commerce

Signature: Corey Baxter
Corey Baxter (Feb 9, 2026 10:55:13 AKST)
Email: cbaxter@iuoe302.org

Finn Support Letter

Final Audit Report 2026-02-09

Created:	2026-02-09
By:	Rebecca Parks (director@juneauchamber.com)
Status:	Signed
Transaction ID:	CBJCHBCAABAAQ4uqrz5e0TXzf2UGAz6fP9OvxAEvtbA7

"Finn Support Letter" History

Document created by Rebecca Parks (director@juneauchamber.com)
2026-02-09 - 7:54:10 PM GMT

Document emailed to Corey Baxter (cbaxter@iuoe302.org) for signature
2026-02-09 - 7:54:13 PM GMT

Email viewed by Corey Baxter (cbaxter@iuoe302.org)
2026-02-09 - 7:54:29 PM GMT

Document e-signed by Corey Baxter (cbaxter@iuoe302.org)
Signature Date: 2026-02-09 - 7:55:13 PM GMT - Time Source: server

Agreement completed.
2026-02-09 - 7:55:13 PM GMT

Adobe Acrobat Sign

TRAVEL JUNEAU

November 3, 2025

To Whom it May Concern,

On behalf of the Travel Juneau Board of Directors, I am pleased to provide this letter of support for the "Alaska Wonder Experience" (AWE), an attraction to be constructed adjacent to the Port of Juneau's dock system. The proposed project, which would include an immersive experience theater, food and beverage options, and the potential for year-round use, would fill a need in Juneau's visitor and community experiences.

Located on Franklin Street next to Marine Park Garage, the facility will have the capacity to entertain hundreds of visitors and locals each day of operation. Guests, seated in units that simulate the feeling of flight and diving, will be visually surrounded by Juneau's scenery, wildlife, and marine life. A variety of productions are planned, including seasonal, holiday, and other offerings. The Alaska Wonder Experience will also be available periodically throughout the shoulder and winter seasons, providing a much-needed year-round, indoor activity at a lower price point for locals.

Further, the facility can serve as event space for the community, as well as an offsite option for groups and meetings. The owners are also considering ways to make the facility available to the Juneau School District to augment their science curricula. As a developed property, AWE will also pay CBJ sales tax and property tax, and employ a local staff. The business requires no shuttle parking and will not impact viewing of the Elizabeth Peratrovich mural.

The proposed Alaska Wonder Experience has the potential to be a premier, family-friendly attraction for our community, available and accessible for locals and visitors. It will fill a need for indoor activities that reflect our community and area. For these reasons, Travel Juneau supports this proposed development for downtown Juneau.

Sincerely,

Liz Perry
President & CEO
Travel Juneau

800 Glacier Ave., Ste. 201, Juneau, AK 99801
Toll Free (888) 581-2201 • (907) 586-2201 • traveljuneau.com

December 3, 2025

City & Borough of Juneau
Attn: Mayor Weldon & Assembly Members
155 S Seward Street
Juneau, AK 99801

Dear Mayor Weldon and CBJ Assembly Members,

This letter is to express our strong support for both the Alaska Fly & Dive project as proposed by Alaskan Wonder Experience (AWE) LLC and their application for a Conditional Use Permit with the City and Borough of Juneau.

The DBA's mission is to promote a vibrant, resilient, and welcoming downtown for residents, visitors, and small businesses. We work directly with merchants, seasonal operators, property owners, local entrepreneurs, and community partners to maintain a safe, inviting commercial core that drives Juneau's economic health. Downtown thrives when innovative, locally driven ventures activate space, create new foot-traffic patterns, and encourage visitors to stay longer and explore more of our businesses.

This proposed project aligns precisely with these goals, especially given the anticipated growth of independent travelers, expedition-style cruises, and hands-on tourism experiences that present clear economic opportunities for Juneau. Alaska Fly & Dive would add a signature attraction to a currently vacant waterfront lot on the Franklin Street corridor—an area central to visitor engagement and year-round community life. Filling this long-inactive space with a high-quality, locally owned operation will increase downtown activity, enhance aesthetics, and reinforce the sense of place that makes Juneau memorable.

This project also supports the entrepreneurs who drive much of downtown's character. The willingness of local business owners to invest at this scale signals strong confidence in Juneau's future and creates related benefits such as more customers for nearby businesses, diversified tour offerings, and more reasons for visitors to spend time in our community.

The DBA encourages the Assembly to consider Alaska Fly & Dive not only as a tourism attraction, but as a downtown revitalization initiative—one that activates waterfront frontage, strengthens business vibrancy, and adds to the mix of high-quality experiences available to our guests. We respectfully urge you to approve AWE LLC's Conditional Use Permit application. Supporting this project is a direct investment in the vitality of downtown Juneau, the success of entrepreneurs, and Juneau's long-term prosperity.

Sincerely,

Nimmy J Philips

Nimmy Philips, President
Downtown Business Association

JEDC
Juneau Economic Development Council

612 W. Willoughby Avenue
Juneau, AK 99801
Phone: (907) 523-2300
www.JEDC.org

December 1, 2025

City & Borough of Juneau
Attn: Mayor Weldon & Assembly Members
155 S Seward Street
Juneau, AK 99801

Esteemed Mayor Weldon and Members of the CBJ Assembly,

I am writing in support of Alaskan Wonder Experience (AWE) LLC's proposed Alaska Fly & Dive project and their application for a Conditional Use Permit from the City and Borough of Juneau (CBJ).

JEDC fosters a healthy and sustainable economic climate in Juneau and throughout Southeast Alaska. In collaboration with other organizations, JEDC implements initiatives to maintain, expand, and create economic opportunities. We help make Juneau a great (capital) city, strengthen key regional industries, promote entrepreneurship and small business, development talent, and much more.

Juneau is a world-class tourist destination and the most visited community in Alaska during the summer. People come from around the world to enjoy our incredible lands, waters, history, and unique ways of life. The growth in independent travelers and tour operators, expedition-style cruises, and fishing lodges, highlight an emerging trend beyond large cruise ship tourism. AWE LLC's Alaska Fly & Dive will be another opportunity for visitors to experience Juneau and Alaska's beauty through hands-on, immersive experiences. Furthermore, it will create a landmark attraction on the last vacant waterfront lot along the vibrant Franklin Street corridor, providing a new, welcoming space for visitors and community members alike. We applaud the vision of a local entrepreneur to substantially invest in our community and offer a unique experience to visitors to downtown Juneau.

I urge you to support AWE LLC's proposal for a Conditional Use Permit. By favorably considering their application, you will be taking a proactive step towards creating jobs and supporting local business while solidifying Juneau's place as a world-class destination.

Sincerely,

Brian Holst
Executive Director
bholst@jedc.org | (907) 523-2333

Society of St. Vincent de Paul
St. Therese Conference
8617 Teal Street
Juneau, AK 99801

"We provide material and spiritual charity and work for social justice for all people"

12/09/2025

Reuben Willis
2908 Jackson Rd
Juneau, AK 99801

To whom it may concern,

The Society of St. Vincent de Paul strongly supports the development of 356 S Franklin Street lot. This development will bring so much to Juneau.

We acknowledge the project will slightly affect the current view from one of our nearby buildings. After review, we find this minor visual impact is vastly outweighed by the need to develop the area and bring more entertainment options to Juneau. We at SVDP are in full support of this project.

Thank you for your consideration, please feel free to contact me with any questions, at 907-713-5622.

Regards,



Executive Director

St. Vincent de Paul Saint Therese Conference

jennifer@svdpjuneau.org

907-713-5622

CC: employee file

From: Justin Smith
To: Heather Holt
Cc: PC_Comments
Subject: RE: 356 S Franklin St / Finn"s Alaska Fly & Dive
Date: Wednesday, February 4, 2026 12:05:41 PM

Hello,

Thank you for submitting your comments regarding the proposed project at 356 S Franklin St. I have received your email, and your comments will be provided to the Planning Commission for their consideration.

You are also welcome to provide testimony when the case is heard by the Planning Commission on February 24, 2026, at 6:00 p.m. The meeting will be held in a hybrid format, allowing for both in-person and virtual participation.

Please let me know if you have any questions about the meeting process or how to participate.

Thank you for taking the time to share your comments.

Justin Smith | Planner I
Community Development Department │ City & Borough of Juneau, AK
Location: 230 S. Franklin Street, 4th Floor Marine View Building
Office: 907.586.0753 ext. 4129

Fostering excellence in development for this generation and the next.

-----Original Message-----
From: Heather Holt <flyingakcaptured@gmail.com>
Sent: Wednesday, February 4, 2026 10:51 AM
To: Justin Smith <justin.smith@juneau.gov>
Subject: 356 S Franklin St / Finn's Alaska Fly & Dive

EXTERNAL E-MAIL: BE CAUTIOUS WHEN OPENING FILES OR FOLLOWING LINKS

Dear Planning Commission,
Please approve the project proposed for 356 S Franklin St . This will be a great addition to Juneau. Sales tax revenue, property tax revenue, a benefit for locals, a benefit for tourists. All downtown, Kind Regards

Sent from my iPhone

From: Justin Smith
To: Maricel Bohulano
Cc: PC_Comments
Subject: RE: 356 S Franklin St / Finn"s Alaska Fly & Dive
Date: Thursday, February 5, 2026 4:22:27 PM

Hello,

Thank you for submitting your comments regarding the proposed project at 356 S Franklin St. I have received your email, and your comments will be provided to the Planning Commission for their consideration.

You are also welcome to provide testimony when the case is heard by the Planning Commission on February 24, 2026, at 6:00 p.m. The meeting will be held in a hybrid format, allowing for both in-person and virtual participation.

Please let me know if you have any questions about the meeting process or how to participate.

Thank you for taking the time to share your comments.

Justin Smith | Planner I
Community Development Department │ City & Borough of Juneau, AK
Location: 230 S. Franklin Street, 4th Floor Marine View Building
Office: 907.586.0753 ext. 4129

Fostering excellence in development for this generation and the next.

-----Original Message-----
From: Maricel Bohulano <bohulanopasion2008@gmail.com>
Sent: Thursday, February 5, 2026 4:15 PM
To: Justin Smith <justin.smith@juneau.gov>
Subject: 356 S Franklin St / Finn's Alaska Fly & Dive

EXTERNAL E-MAIL: BE CAUTIOUS WHEN OPENING FILES OR FOLLOWING LINKS

Dear Planning Commission,

Please approve the project proposed for 356 S Franklin St . This will be a great addition to Juneau for sales tax revenue, property tax revenue. It is a benefit for locals, a benefit for tourists all downtown.

Sincerely,

Maricel Bohulano

Sent from my iPhone

From: Justin Smith
To: Marlla Cabrigas
Cc: PC_Comments
Subject: RE: 356 S Franklin St / Finn"s Alaska Fly & Dive
Date: Friday, February 6, 2026 9:33:29 AM

Hello,

Thank you for submitting your comments regarding the proposed project at 356 S Franklin St. I have received your email, and your comments will be provided to the Planning Commission for their consideration.

You are also welcome to provide testimony when the case is heard by the Planning Commission on February 24, 2026, at 6:00 p.m. The meeting will be held in a hybrid format, allowing for both in-person and virtual participation.

Please let me know if you have any questions about the meeting process or how to participate.

Thank you for taking the time to share your comments.

Justin Smith | Planner I
Community Development Department │ City & Borough of Juneau, AK
Location: 230 S. Franklin Street, 4th Floor Marine View Building
Office: 907.586.0753 ext. 4129

Fostering excellence in development for this generation and the next.

-----Original Message-----
From: Marlla Cabrigas <mcab4@icloud.com>
Sent: Thursday, February 5, 2026 8:16 PM
To: Justin Smith <justin.smith@juneau.gov>
Subject: 356 S Franklin St / Finn's Alaska Fly & Dive

EXTERNAL E-MAIL: BE CAUTIOUS WHEN OPENING FILES OR FOLLOWING LINKS

Dear Planning Commission,
Please approve the project proposed for 356 S Franklin St . This will be a great addition to Juneau. Sales tax revenue, property tax revenue, a benefit for locals, a benefit for tourists. All downtown, Kind Regards

CITY AND BOROUGH OF JUNEAU
ALASKA'S CAPITAL CITY
COMMUNITY DEVELOPMENT

(907) 586-0715
CDD_Admin@juneau.org
www.juneau.org/CDD
155 S. Seward Street • Juneau, AK 99801

DATE: February 20, 2026

TO: Erik Pedersen, Chair, Planning Commission

BY: Justin Smith, Planner
Community Development Department

THROUGH: Jill Lawhorne, AICP, Director
Community Development Department
Scott Ciambor, Planning Manager,for

FILE NO.: USE2025 0013; VAR2025 0008; VAR2025 0009

This memo provides information regarding CBJ Docks & Harbors agency review of the waterfront commercial development, requiring a Conditional Use and two Variance applications for the Planning Commission's February 24, 2026, hearing.

At the time the staff reports were prepared, CBJ Docks & Harbors had not provided comments on the proposed project. On February 19, 2026, Justin Smith, Planner, contacted Carl Uchytil, Port Director. Mr. Uchytil stated that the Conditional Use Permit and associated Variance applications were presented to the Docks and Harbors Board twice for consideration, and on both occasions the Board declined to provide comments on the proposal.

Alaska Fly & Dive

Immersive Alaska
Discover the Magic of Juneau

Alaskan Wonder Experience (AWE) LLC & Malvern Entertainment - Confidential Information - May Contain Trade Secrets - Do Not Distribute - All Rights Reserved



ORIGIN STORY: A PREMIUM LOCATION

Franklin Street in Juneau is the city's prime waterfront corridor, an ideal home for an immersive fly theater and other equipment to show case Alaska and all its "Grand Beauty". The founding partners secured the **last available waterfront lot**, offering unmatched visibility at the entrance to the **dock port of Juneau** and immediate access to **five major cruise ship docks**.

With **1.73 million annual visitors** and limited entertainment options, 356 Franklin is perfectly positioned to become Juneau's next iconic destination.

Alaskan Wonder Experience (AWE) LLC & Malvern Entertainment - Confidential Information - May Contain Trade Secrets - Do Not Distribute - All Rights Reserved

ALASKA FLY & DIVE

Developed in collaboration with **Malvern Entertainment**, Alaska Fly & Dive (Attraction name placeholder) combines three thrilling experiences within a fully immersive setting:

- **Flying Theater**, featuring state-of-the-art SFX-Motion Seats, a customized motion base, an immersive-dome high-resolution theater for a seamless, gliding sensation as guests experience world-class films produced for the family (*72 seats, 52' dome screen*);
- **Ocean 360** , a deep-sea adventure using fully immersive LED screens and a synchronized motion base to simulate a realistic underwater journey (*360-degree screens, 20-seat simulator*);
- **4D Theater** – Using state-of-the-art 3D LED panels, this theater will deliver beautiful scenic movies with the latest 3D technology as well as state of the art seats for added experience dimension.







Alaskan Wonder Experience (AWE) LLC & Malvern Entertainment - Confidential Information - May Contain Trade Secrets - Do Not Distribute - All Rights Reserved

FLYING THEATER

Media Concept Art







FLYING THEATER Equipment

- Huge Demographic Range – 4 to 94 years old
  - 39in (100cm) min height requirement
- Single Level Loading
  - Reduces load / unload time increasing THRC
  - Requires fewer employees to operate
  - Reduced facility structure and interface compared with multi-level loading
- Unsurpassed Motion System
  - Variable motion capability including:
    - Aggressive high impact maneuvers and multi-axis combinations
    - Extremely smooth and serene flight
  - Quiet all-electric drive system
  - Reduced maintenance with nearly a decade of history and improvements
- Dramatic Reveal Moment – Load to Flying Position
- Ergonomic Mesh Seats with Locked and Monitored Seat Belts
- Special Effects – Wind, Scent, Mist, and Strobe Light
- Industry Best Laser Projectors with Micro-Perforated Aluminum Screen
  - 20+ Megapixel resolution
  - Brilliant colors and pin sharp image quality across entire screen
- Premium 3D 11.4 Surround Sound Audio System

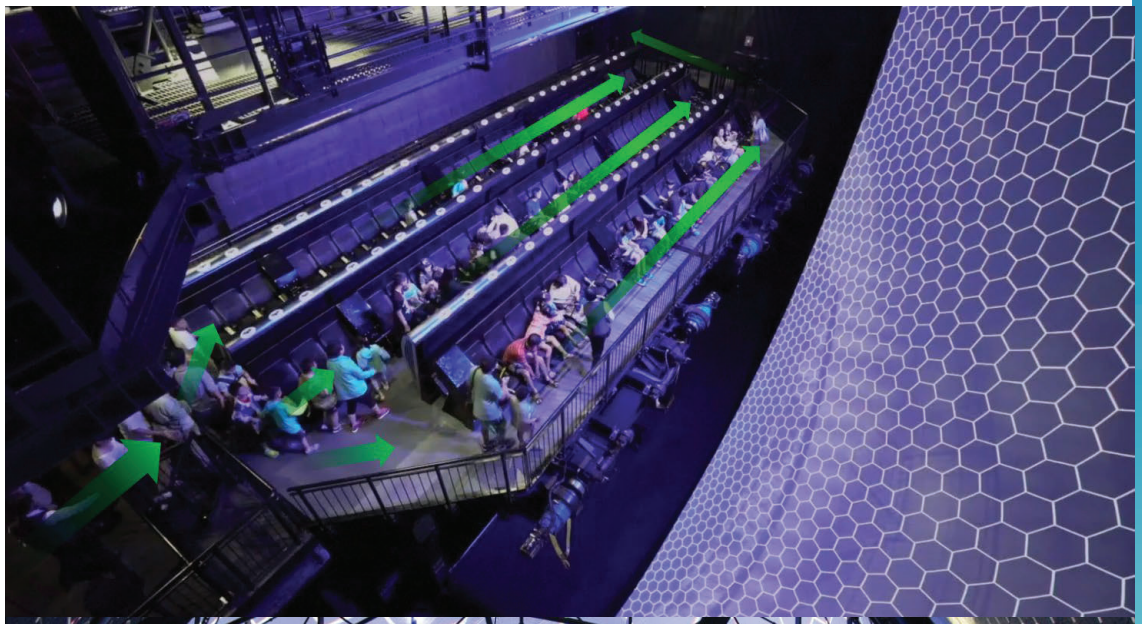

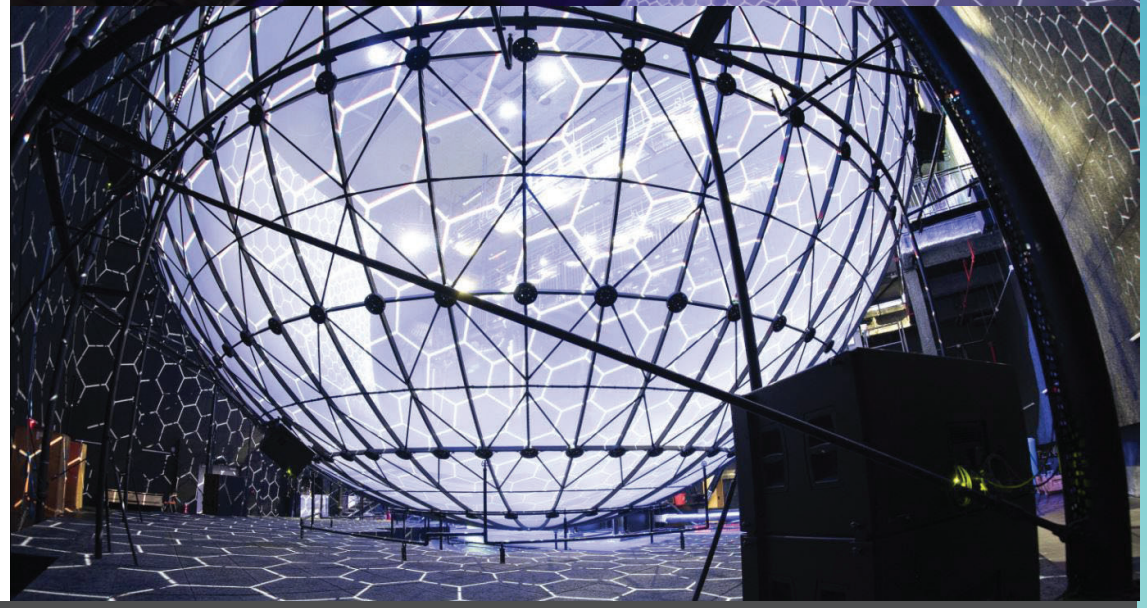

Produced by Dynamic Attractions.
This content is CONFIDENTIAL. Do NOT distribute. December 25.

FLYING THEATER ARRANGEMENT

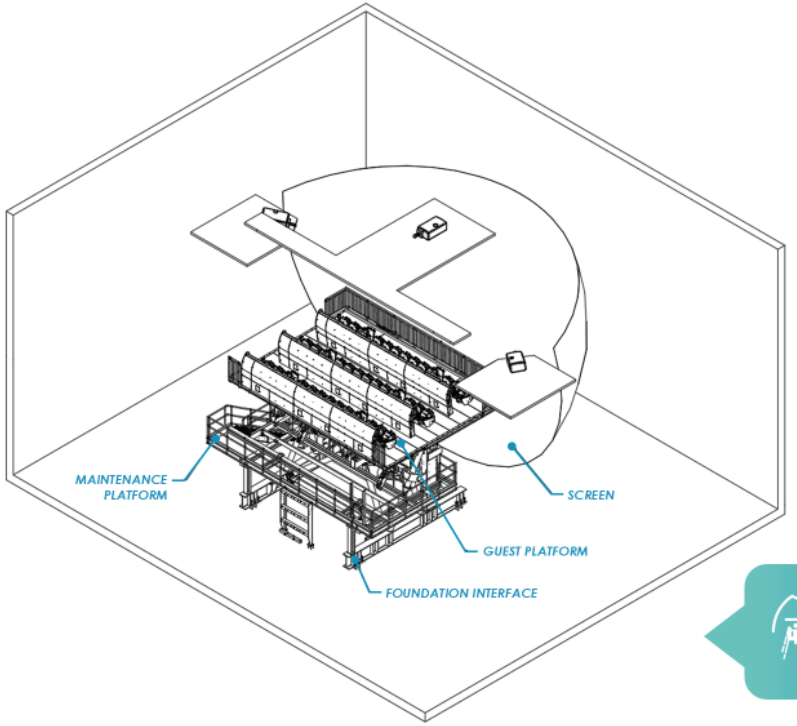

Figure 3:
FT39 General Arrangement With Motion Base & Audio / Visual

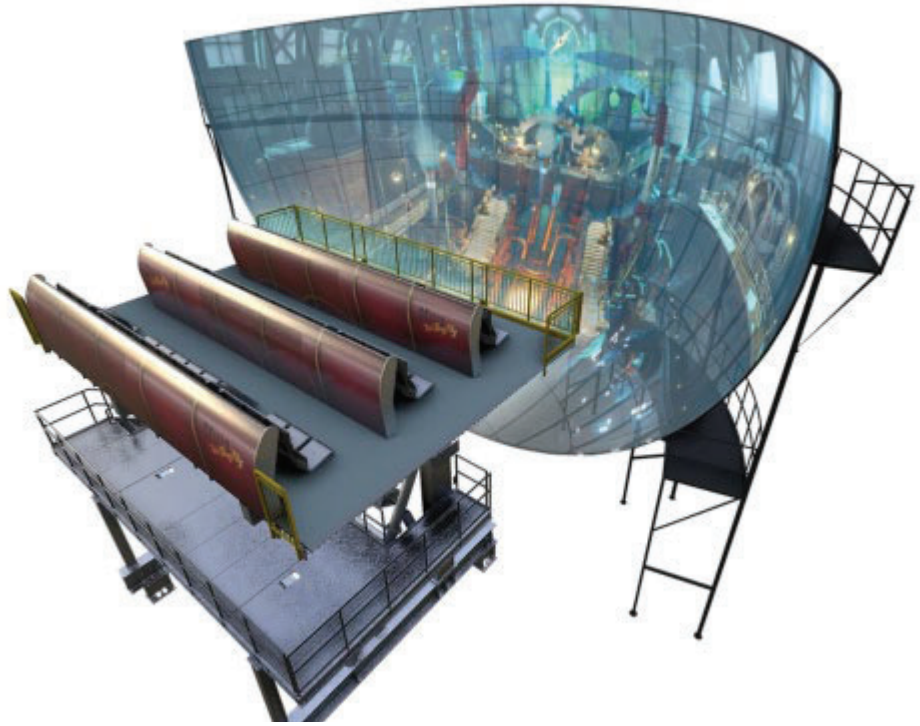

Alaskan Wonder Experience (AWE) LLC & Malvern Entertainment - Confidential Information - May Contain Trade Secrets - Do Not Distribute - All Rights Reserved

Flying Theater Overview

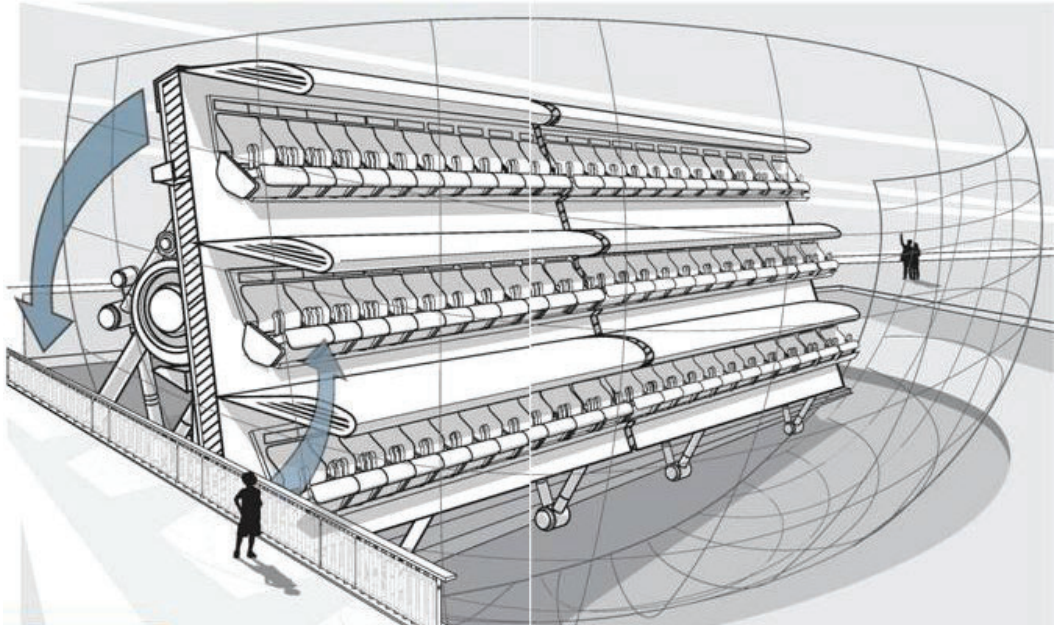

SINGLE LEVEL LOADING

- Quick and easy for riders
- Maximizes THRC
- Minimizes the number of operators

MODULAR DESIGN

- Easy to maintain
- Designed for maximum asset life
- Facility requirements drastically reduced
- Customized requirements

EFFICIENT

- Extremely smooth and serene flight
- Quiet, fully electric motors
- Fewer moving parts and simplified programming

SPECIAL EFFECTS

- Wind
- Vibration in Seat
- 3 Scents
- Water Spritz

DEGREES OF FREEDOM

Mechanical DOF
- Pitch
- Heave

Optical DOF (Film effects)
- Yaw
- Roll
- Surge
- Pan

Operating Parameter	FT 72
Platform Motion Range, Loading to Flying Mode	0 – 82 deg
Platform Motion Time (0-82deg)	12 sec
Seat Pitch Range (Pitch Forward to Back)	+/- 10 deg
Seat Pitch Motion Time (0 – 10 deg)	1 sec
Seat Heave Range in Vertical Position	1 m
Seat Heave motion Time (0.5m Movement)	1.25 sec

DYNAMIC ATTRACTIONS

OCEAN 360

Media Concept Art













Alaskan Wonder Experience (AWE) LLC & Malvern Entertainment - Confidential Information - May Contain Trade Secrets - Do Not Distribute - All Rights Reserved

OCEAN 360

Submersible Simulator

The Ocean Voyager's combination of cutting-edge technology, immersive storytelling, and interactive elements promises an unforgettable experience that educates, entertains, and inspires a deeper appreciation for the ocean.

Encompassing all views, immersive LED screens and a motion base work together to create a highly realistic and dynamic underwater experience, intensifying the sensation of diving and exploring.



CONFIDENTIAL CONTENT - DO NOT DISTRIBUTE - ©2025 MALVERN ENTERTAINMENT.









RIDES & ATTRACTIONS

OCEAN 360 A LOOK INSIDE

CONFIDENTIAL CONTENT - DO NOT DISTRIBUTE - ©2025 MALVERN ENTERTAINMENT.

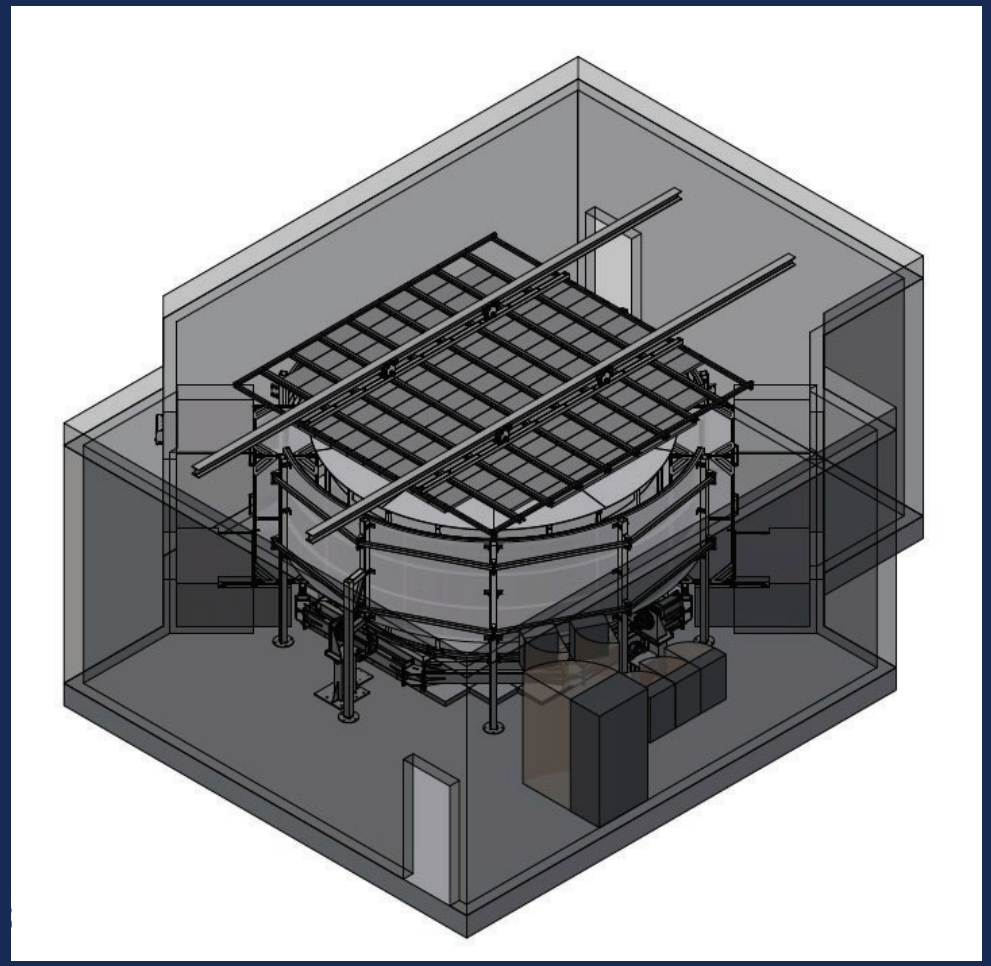

- 2DOF Motion Base (pitch & roll)
- High resolution LED screens
- Fully integrated SFX components
- 10 channel audio system
- Customizable exterior theming
- Simple installation
- Low-cost maintenance
- 99% uptime/highly reliable components
- Revenue generating and extremely marketable
- Offers guest repeatability w/ multiple experiences

RIDES & ATTRACTIONS

OCEAN 360 SPECIFICATIONS

CONFIDENTIAL CONTENT - DO NOT DISTRIBUTE - ©2025 MALVERN ENTERTAINMENT.

Humpback Whale Encounter



CONFIDENTIAL CONTENT - DO NOT DISTRIBUTE - ©2025 MALVERN ENTERTAINMENT.

KRAFTWERK LIVING TECHNOLOGIES

TRANSFORMING IDEAS
EXCEEDING LIMITS

4D Theater featuring state-of-the-art 3D LED Magnos technology

TURN ON ACTION

As one of the world's leading professional AV system integrators, Kraftwerk Living Technologies provides state-of-the-art 4D theater solutions perfectly tailored to the individual client's needs. By combining and integrating stunning special effects with perfectly synchronized 4DOF motion, we make sure that each and every guest experiences a unique and highly immersive 4D adventure. Kraftwerk Living Technologies is your expert in creating innovative 4D theater solutions and technologies that cannot fail to impress your guests!

INSTALLATION DESCRIPTION & COMPONENTS

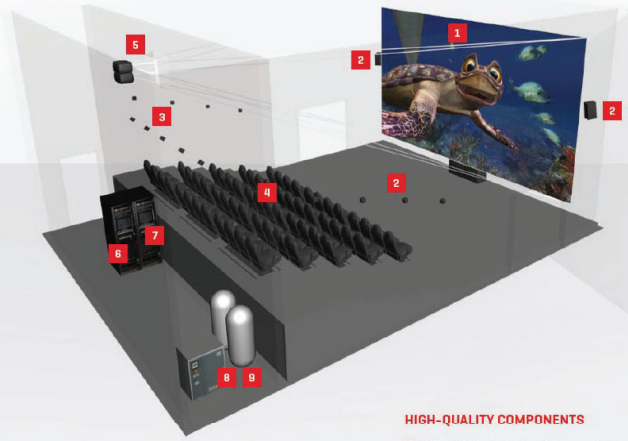

HIGH-QUALITY COMPONENTS

1. Ultra high definition video projection
2. Multi-channel surround sound system
3. Possible upgrade: Immersive audio system
4. 4D SFX Motion Seats
5. 3D-capable projection screen
6. High-end video server
7. State-of-the-art show control system
8. Water treatment system
9. Compressed air system

HIGHLIGHTS

Our 4D theater technology sets the stage for showcasing various types of content in a variety of settings – from theme parks to museums, from entertainment to education.

- > GREAT FLEXIBILITY WITH REGARDS TO VENUE SIZE
- > LARGE HOURLY THROUGHPUT RATES POSSIBLE
- > PNEUMATIC MOTION SYSTEM FOR SMOOTH AND REALISTIC MOTION
- > HIGHEST SAFETY STANDARDS
- > INNOVATIVE, CUSTOMIZED SOLUTIONS WITH STATE-OF-THE ART TECHNOLOGIES
- > EXCITING HIGH-CLASS SPECIAL EFFECTS
- > LARGE FLEXIBILITY WITH REGARDS TO CONTENT SHOWN



THE 4D SFX MOTION BASE

The 4D SFX Motion Seats developed by Kraftwerk Living Technologies round off our expertise in creating 4D theater solutions, allowing for the highest-quality experience, featuring 4DOF precision movement as well as the most comprehensive array of integrated in-seat special effects.



* Each base is available as a regular, elevated or curved 3- as well as 4-seater unit, with a basic or special effects armrest

KRAFT WERK
LIVING TECHNOLOGIES

TRANSFORMING IDEAS
EXCEEDING LIMITS

KLT MOTION TECHNOLOGY



High-end, state-of-the-art 4D motion seat technology sets the stage for various types of content in a variety of settings - from theme parks to museums, from entertainment to education... bringing your story, your message, your brand and your art to life!

- 3- or 4-seater unit
- Electric or pneumatic drive
- Basic version with regular armrest or advanced one with integrated special effects
- Optional footrest
- Curved version for flexible seat alignment



SFX IN SEAT

- Dual Neck Blast
- Poke Effect
- Dual Leg Tickler
- Seat Vibration
- Water Spray
- In-Seat Audio System

SFX IN ARMREST

- Water Spray
- Face Blast
- Wind System
- Strobe Flashlight
- Face Light
- Floor Illumination
- Occupancy Sensor
- Multi-Scent System





ESTIMATED STAFFING PLAN

Total Estimated Staffing: 30 Staff Members

The operation is supported by an estimated 30 staff members, with staffing levels flexing seasonally to accommodate peak demand. To support future growth and provide scheduling flexibility, we recommend planning for a buffer of 30–35 staff. This mix of full-time and part-time employees allows coverage for additional support roles, seasonal fluctuations, and operational needs. Housekeeping, cleaning, and security will likely be supported by contracted services.

Department	Role	Headcount
General Management	General Manager	1
	Duty Manager	1
	Operations Managers	2
Technical Support	Technicians	5
Front of House	Admissions, Front Door, Retail Staff	8
Attractions	Operators, Ticket Scanners, Preshow Attendants	13
	Total	**30**

Alaskan Wonder Experience (AWE) LLC & Malvern Entertainment - Confidential Information - May Contain Trade Secrets - Do Not Distribute - All Rights Reserved

CU Permit Set

Alaska Fly & Dive

12.10.2025

A000 Cover
A100 Plat
A101 Site Plan - Property Lines
A102 Site Plan - Existing
A103 Site Plan - Overall
A104 Site Plan - Enlarged
A201 Floor Plan - 1st Floor
A202 Floor Plan - Mezzanine
A203 Floor Plan - 2nd Floor
A204 Roof Plan
A301 Exterior Elevations
A302 Exterior Elevations
A311 Building Section
A312 Building Section
A321 Perspective Views
A322 Perspective Views
A323 Perspective Views

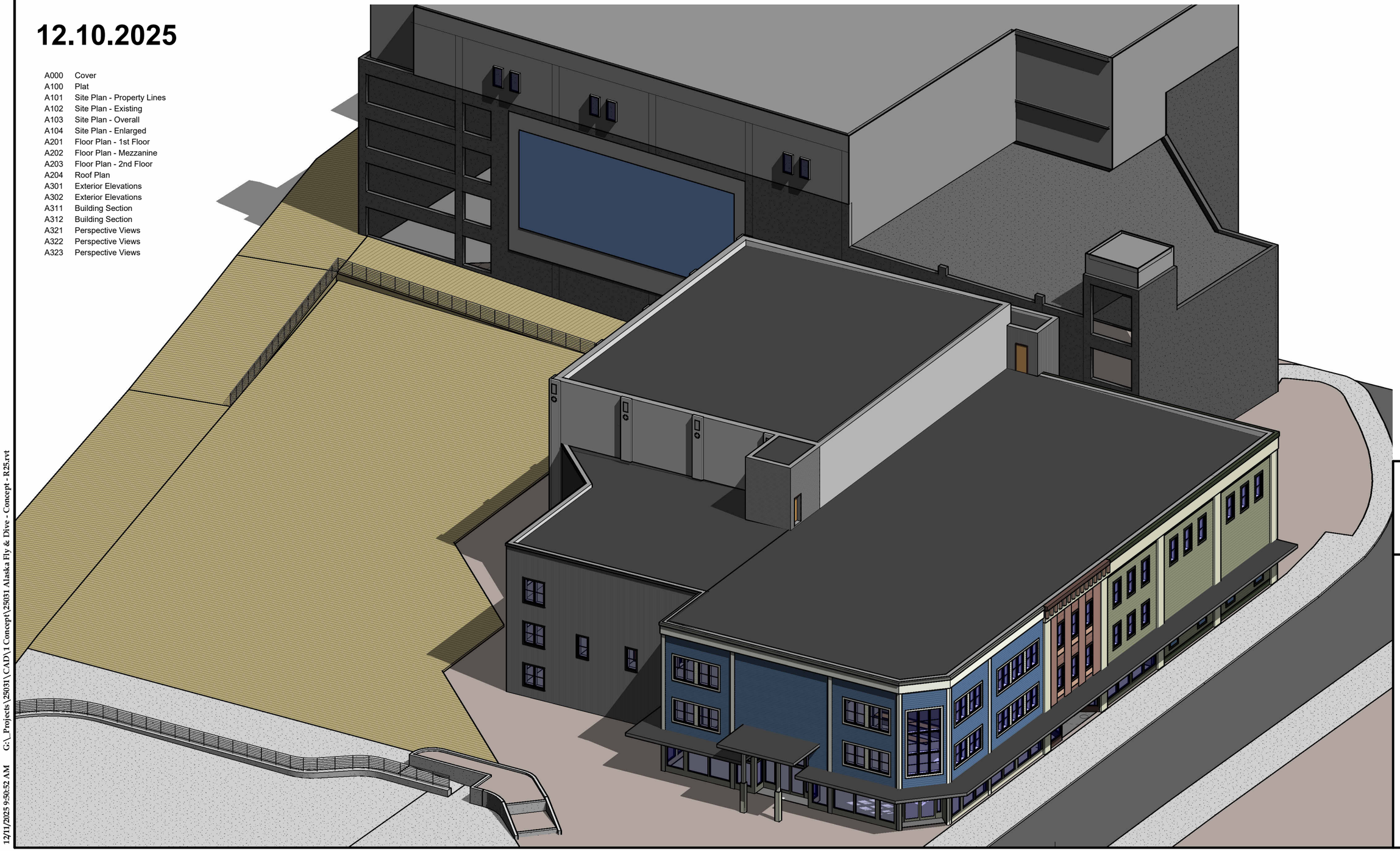

Jensen Yorba Wall Inc.

522 West 10th Street
Juneau, Alaska 99801
907.586.1070
AECC137
jensenyorbawall.com

FILE: 25031

A000

12/11/2025 9:50:52 AM G:_Projects\25031\CAD\1 Concept\25031 Alaska Fly & Dive - Concept - R25.rvt

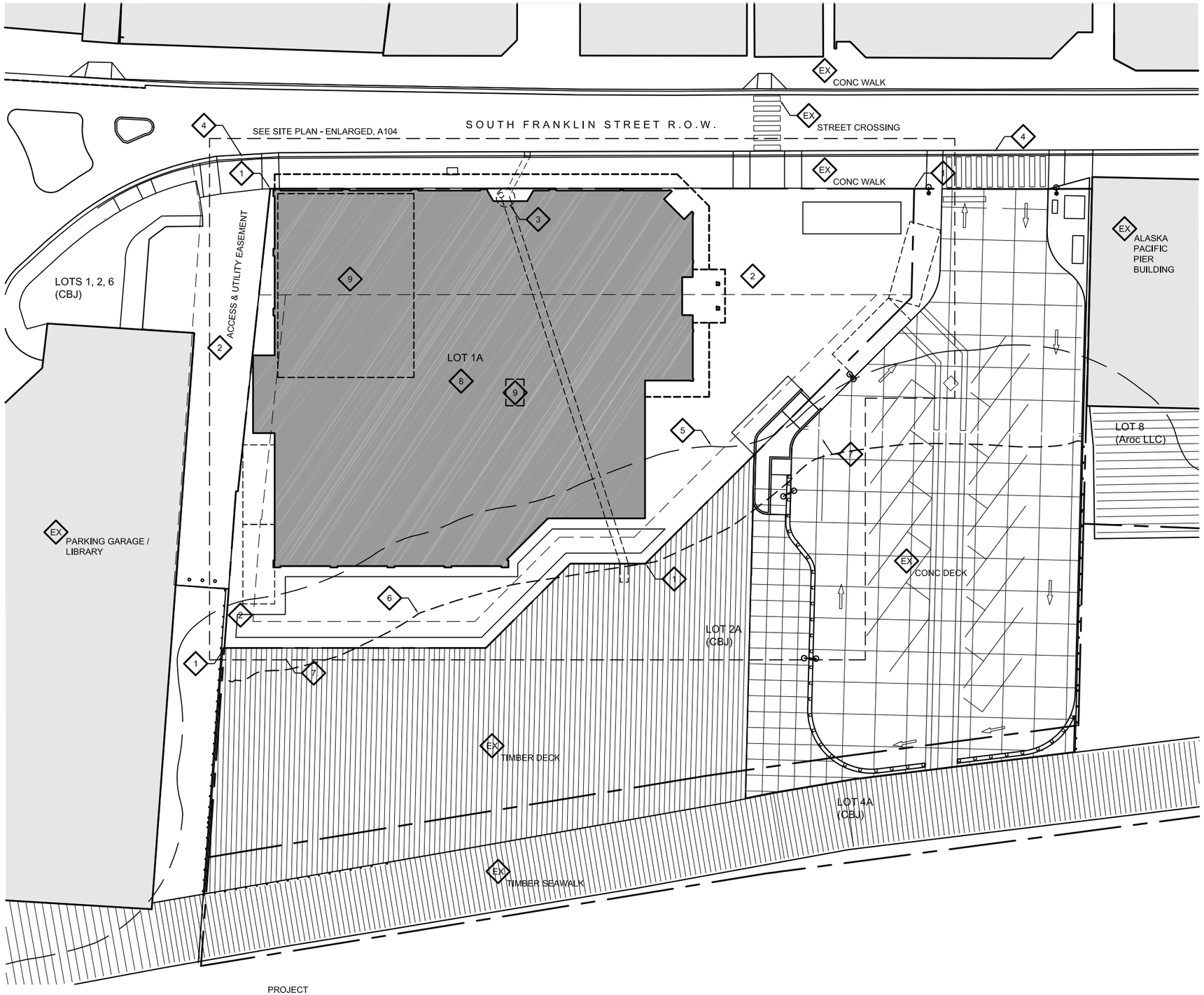

KEY NOTES:

- EX — EXISTING
- 1 — PROPERTY LINES
- 2 — SETBACK / ZONING DISTRICT / EASEMENT LINES
- 3 — STORM DRAIN TO BE REMOVED & RELOCATED
- 4 — EXISTING DRIVEWAY ENTRANCE
- 5 — FEMA FLOODPLAIN LIMIT (APPROX.) PRIOR TO RETAINING WALL, ZONE VE, ELEVATION 25'.
- 6 — MEAN HIGH WATER LINE (MHW), PRIOR TO RETAINING WALL, ELEVATION 15.34'
- 7 — PILE SUPPORTED CONCRETE RETAINING WALL BELOW ALONG SOUTH OF LOT 1A. TOP OF WALL 27.17' TO 28.53'. BFE CONTOUR (25') AND MHW CONTOUR (15.34') NOW AT FACE OF WALL.
- 8 — ALASKA FLY & DIVE BUILDING, FINISHED FLOOR ELEVATION 28.5'
- 9 — THEATER FLOOR AND ELEVATOR PIT, FINISHED FLOOR ELEVATION 23.5'

PROJECT NORTH

1 **Site Plan - Overall**

SCALE: 0 20' 40'

Jensen Yorba Wall Inc.
522 West 10th Street
Juneau, Alaska 99801
907.586.1070
AECC137
jensenyorbawall.com

Alaska Fly & Dive

CU PermIt Set

REVISIONS

SHEET TITLE

Site Plan - Overall

DATE: 12.10.2025
FILE: 25031

A103

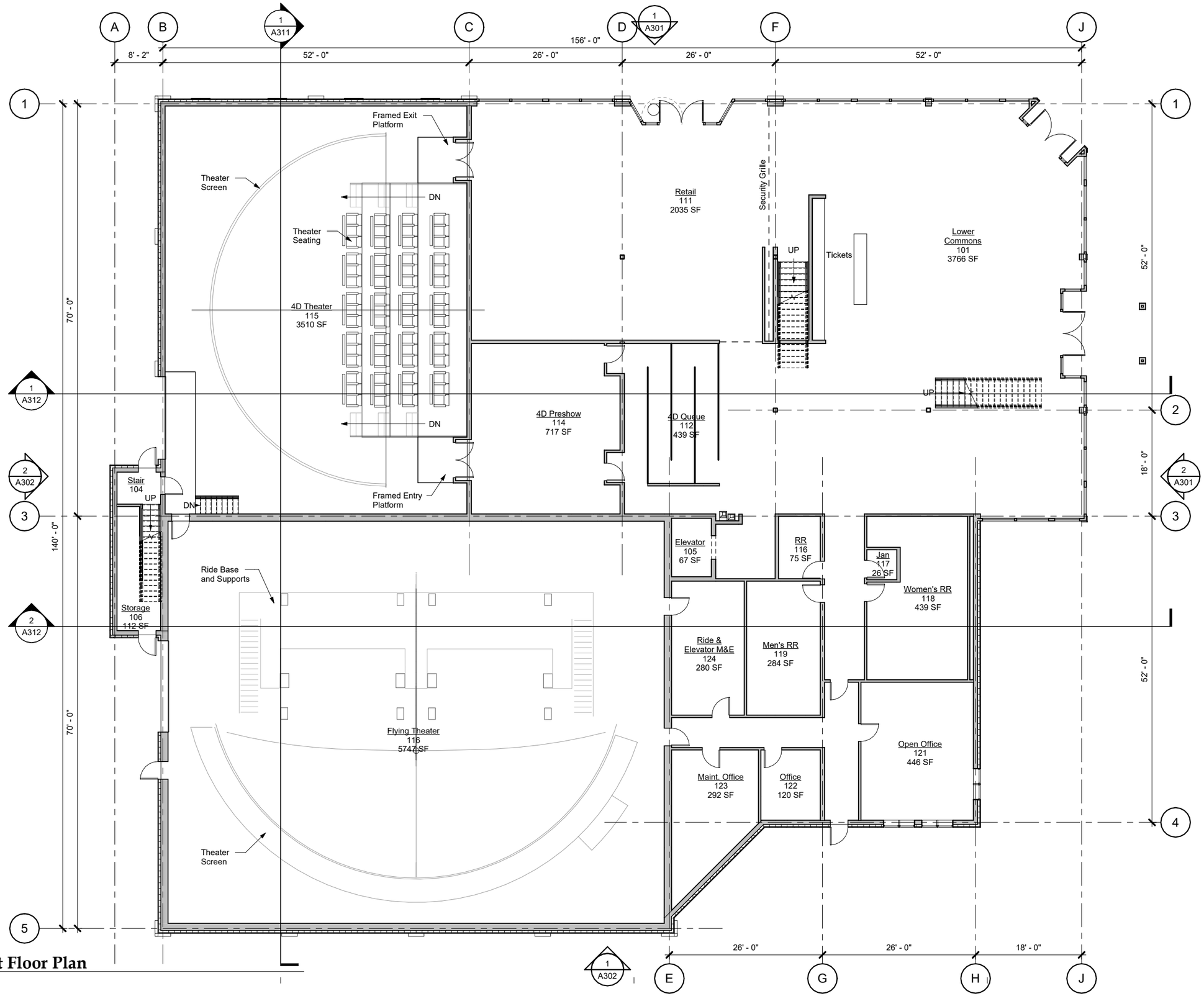

1 1st Floor Plan

Jensen Yorba Wall Inc.
522 West 10th Street
Juneau, Alaska 99801
907.586.1070
AECC137
jensenyorbawall.com

Alaska Fly & Dive

CU Permit Set

REVISIONS

SHEET TITLE

Floor Plan - 1st Floor

DATE: 12.10.2025
FILE: 25031

A201

12/10/2025 4:08:12 PM G:_Projects\25031\CAD\1 Concept\25031 Alaska Fly & Dive - Concept - R25.rvt

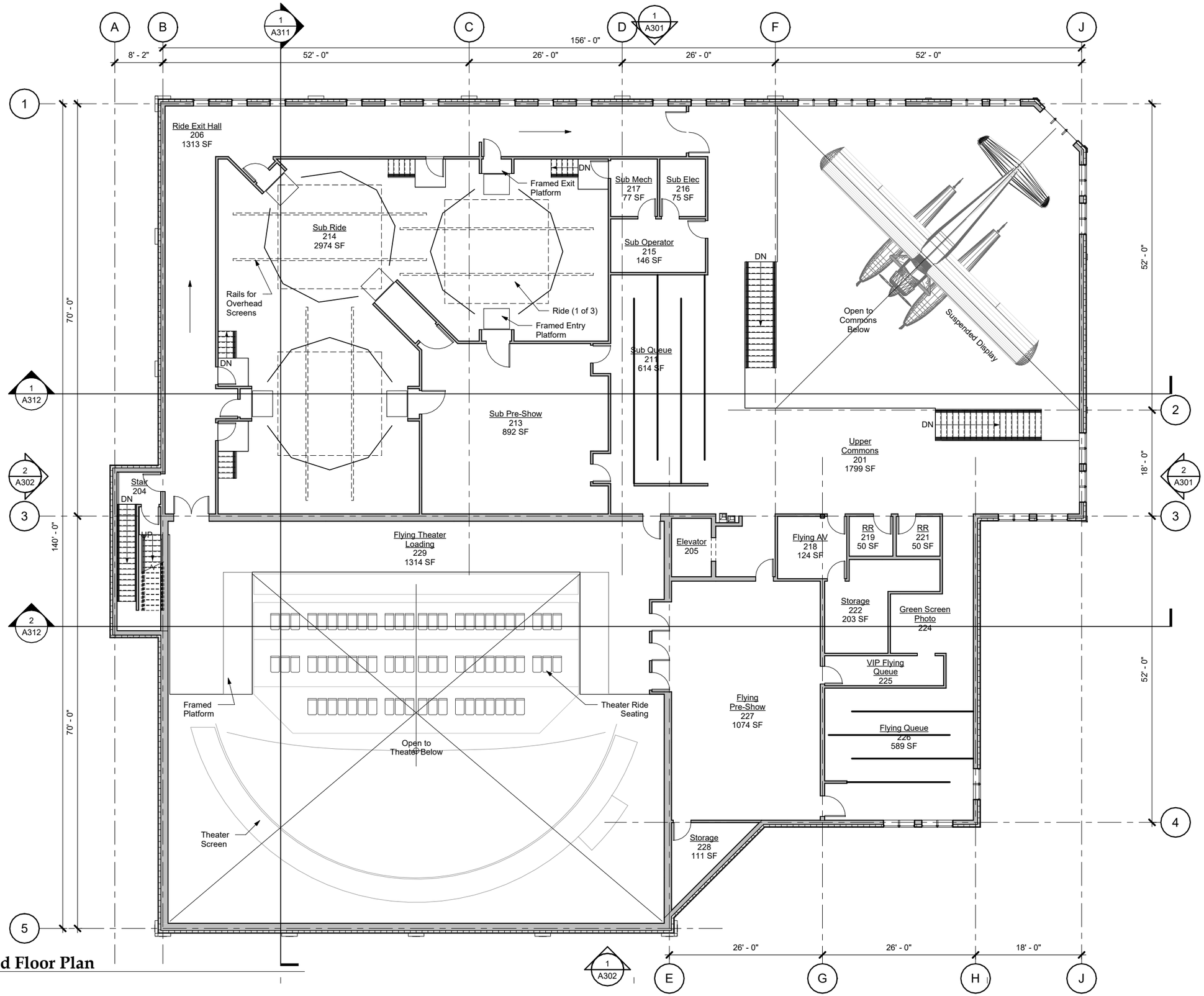

1 **2nd Floor Plan**

Jensen Yorba Wall Inc.

522 West 10th Street
Juneau, Alaska 99801
907.586.1070
AECC137
jensenyorbawall.com

Alaska Fly & Dive

CU Permit Set

REVISIONS

SHEET TITLE

Floor Plan - 2nd Floor

DATE: 12.10.2025
FILE: 25031

A203

12/10/2025 4:08:14 PM G:_Projects\25031\CAD\1 Concept\25031 Alaska Fly & Dive - Concept - R25.rvt

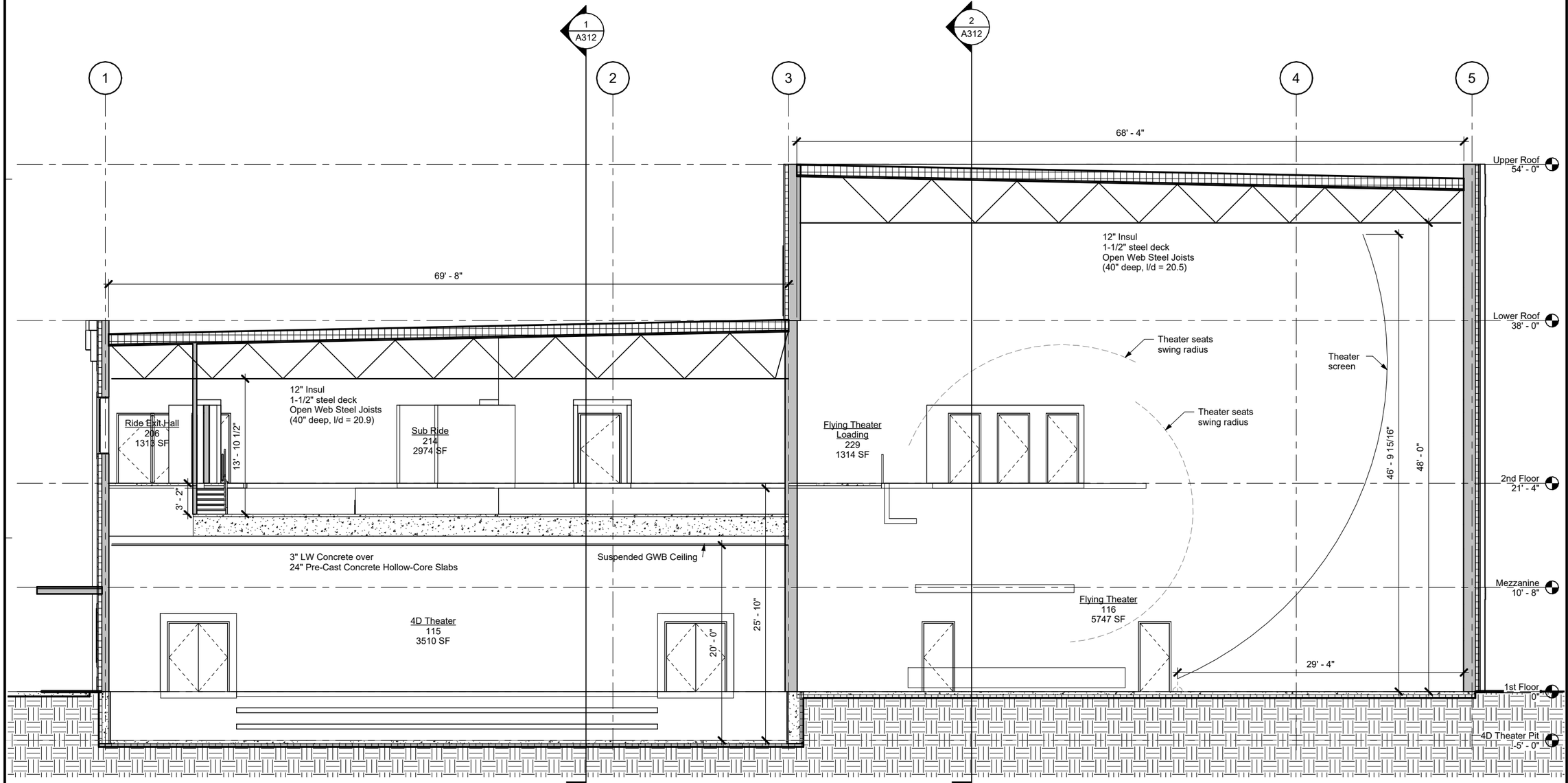

1 Section 1-5 @ Flying Theater

Jensen Yorba Wall Inc.

522 West 10th Street
Juneau, Alaska 99801
907.586.1070
AECC137
jensenyorbawall.com

Alaska Fly & Dive

CU Permit Set

REVISIONS

SHEET TITLE

Building Section

DATE: 12.10.2025
FILE: 25031

A311

G:_Projects\25031\CAD\1 Concept\25031 Alaska Fly & Dive - Concept - R25.rvt
12/10/2025 4:08:16 PM



1 **Perspective - Franklin Street Crosswalk** COLORS TBD



2 **Perspective - Franklin Street @ Pier 49** COLORS TBD

Jensen Yorba Wall Inc.

522 West 10th Street
Juneau, Alaska 99801
907.586.1070
AECC137
jensenyorbawall.com

Alaska Fly & Dive

CU Permit Set

REVISIONS

SHEET TITLE

Perspective Views

DATE: 12.10.2025
FILE: 25031

A321

12/10/2025 3:50:06 PM G:_Projects\25031\CAD\1 Concept\25031 Alaska Fly & Dive - Concept - R25.rvt

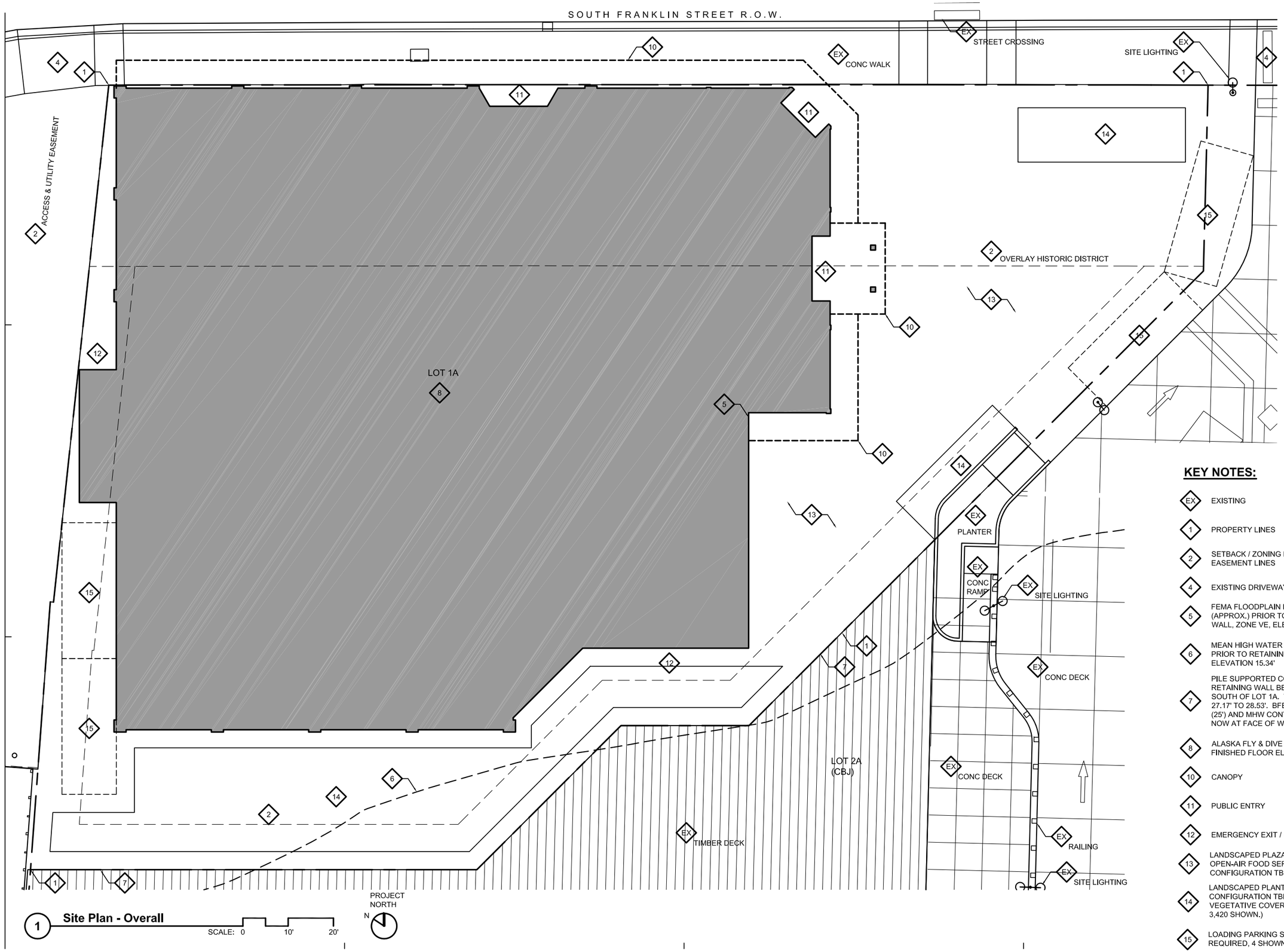

KEY NOTES:

- EX — EXISTING
- 1 — PROPERTY LINES
- 2 — SETBACK / ZONING DISTRICT / EASEMENT LINES
- 4 — EXISTING DRIVEWAY ENTRANCE
- 5 — FEMA FLOODPLAIN LIMIT (APPROX.) PRIOR TO RETAINING WALL, ZONE VE, ELEVATION 25'.
- 6 — MEAN HIGH WATER LINE (MHW), PRIOR TO RETAINING WALL, ELEVATION 15.34'
- 7 — PILE SUPPORTED CONCRETE RETAINING WALL BELOW ALONG SOUTH OF LOT 1A. TOP OF WALL 27.17' TO 28.53'. BFE CONTOUR (25') AND MHW CONTOUR (15.34') NOW AT FACE OF WALL.
- 8 — ALASKA FLY & DIVE BUILDING, FINISHED FLOOR ELEVATION 28.5'
- 10 — CANOPY
- 11 — PUBLIC ENTRY
- 12 — EMERGENCY EXIT / STAFF ENTRY
- 13 — LANDSCAPED PLAZA AND FUTURE OPEN-AIR FOOD SERVICE, CONFIGURATION TBD
- 14 — LANDSCAPED PLANTER, CONFIGURATION TBD. (3,388 SF VEGETATIVE COVER REQUIRED, 3,420 SHOWN.)
- 15 — LOADING PARKING STALL. (NONE REQUIRED, 4 SHOWN.)

Jensen Yorba Wall Inc.
522 West 10th Street
Juneau, Alaska 99801
907.586.1070
AECC137
jensenyorbawall.com

Alaska Fly & Dive

CU Permit Set

REVISIONS

Site Plan - Enlarged

DATE: 12.10.2025
FILE: 25031

A104

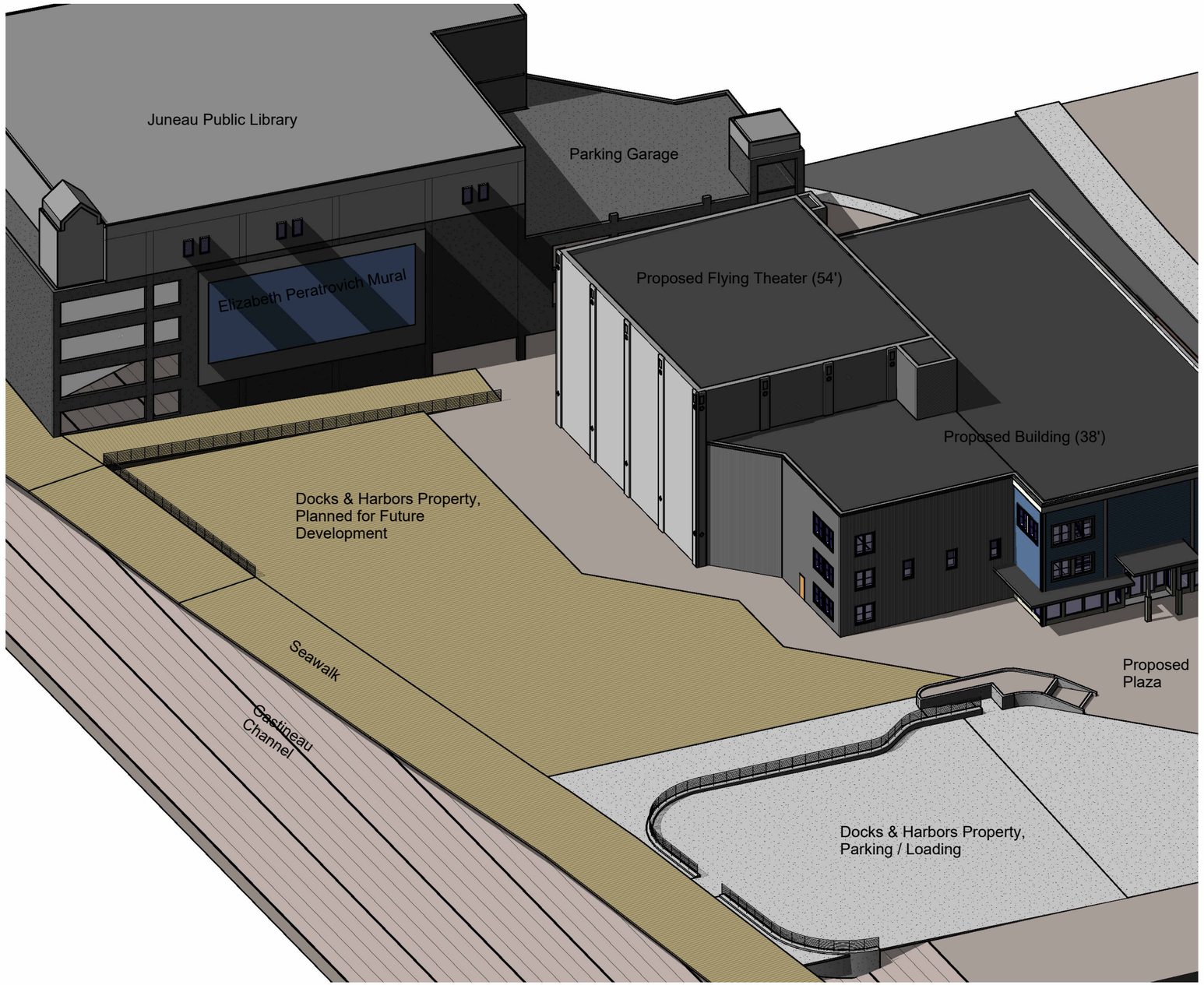

Jensen
Yorba
Wall Inc.

522 West 10th Street
Juneau, Alaska 99801
907.586.1070
AECC137
jensenyorbawall.com

Alaska Fly & Dive

CU Permit Set

REVISIONS

SHEET TITLE

Images for CUP

DATE: 12.10.2025
FILE: 25031

A002

2/20/2026 10:05:28 AM G:_Projects\25031\CAD\1 Concept\25031 Alaska Fly & Dive - Concept - R25.rvt

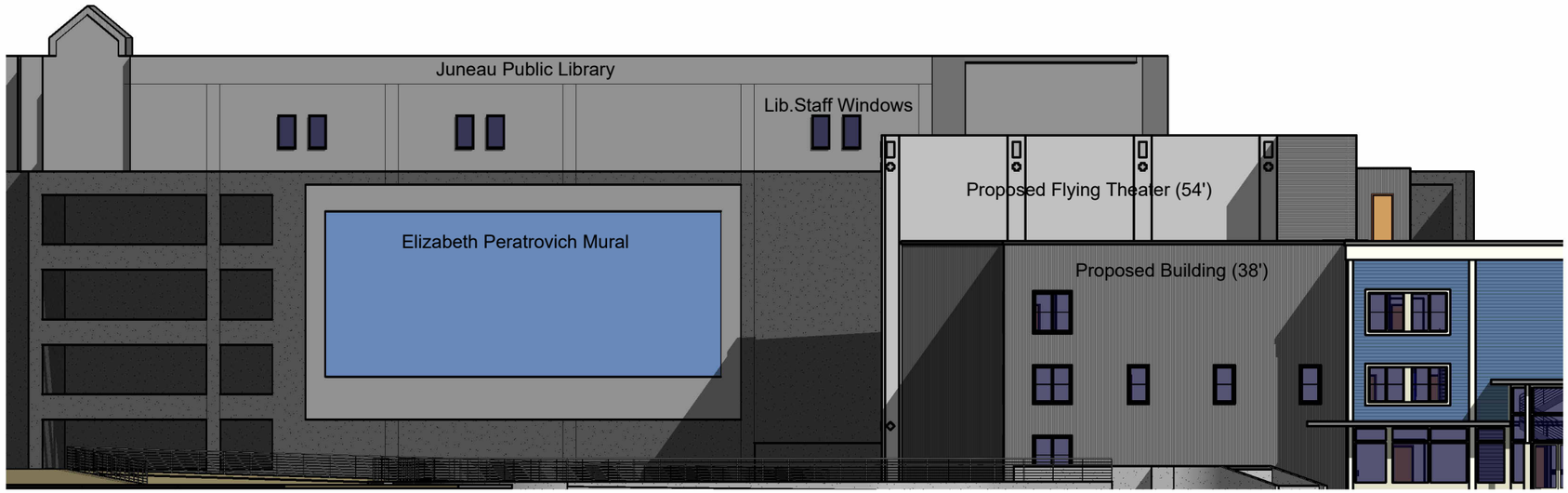



Jensen
Yorba
Wall Inc.

522 West 10th Street
Juneau, Alaska 99801
907.586.1070
AECC137
jensenyorbawall.com

Alaska Fly & Dive

CU Permit Set

REVISIONS

SHEET TITLE

Images for CUP

DATE: 12.10.2025
FILE: 25031

A003

2/20/2026 10:03:11 AM G:_Projects\25031\CAD\1 Concept\25031 Alaska Fly & Dive - Concept - R25.rvt

Community & Cultural Events (October–May)

MONTH	COMMUNITY EVENT & INITATIVE
October	JSD Elementary School Nield trips
November	Public Market participation
December	Gallery Walk / Governor's Mansion Open House / Family Weekends
January	Alaska State Legislators Reception Welcome Back with Free Rides
February	Elizabeth Peratovich Day / Juneau Jazz & Classics Jazz Fest
March	Gold Medal Basketball Tournament
April	Juneau Folk Festival Open Weekends; Host musical groups
May	Maritime Festival / Prom Night Discount / Safe Grad Free Rides for Seniors
June	Sealaska Heritage Institute Celebration

Local Access & Inclusion

- **Discounted Off-Season Tickets:** Deeply reduced pricing for Juneau residents October–April.
- **Sponsored School Visits:** Free admission for teachers and chaperones.
- **Locals Appreciation Days:** Weekend discounts.
- **Nonprofit & Civic Partnerships:** Foyer use for local fundraisers, meetings, and events.
- **Youth Celebrations:** Prom discounts and free Safe Grad graduation night rides to create positive, safe traditions.

By providing education, community, and cultural enrichment, our goal is to imbed this attraction into the cultural and education life of Juneau's civic life. These efforts will ensure the facility is not only an attraction for visitors, but a gathering place and source of pride and fun for locals throughout the year.

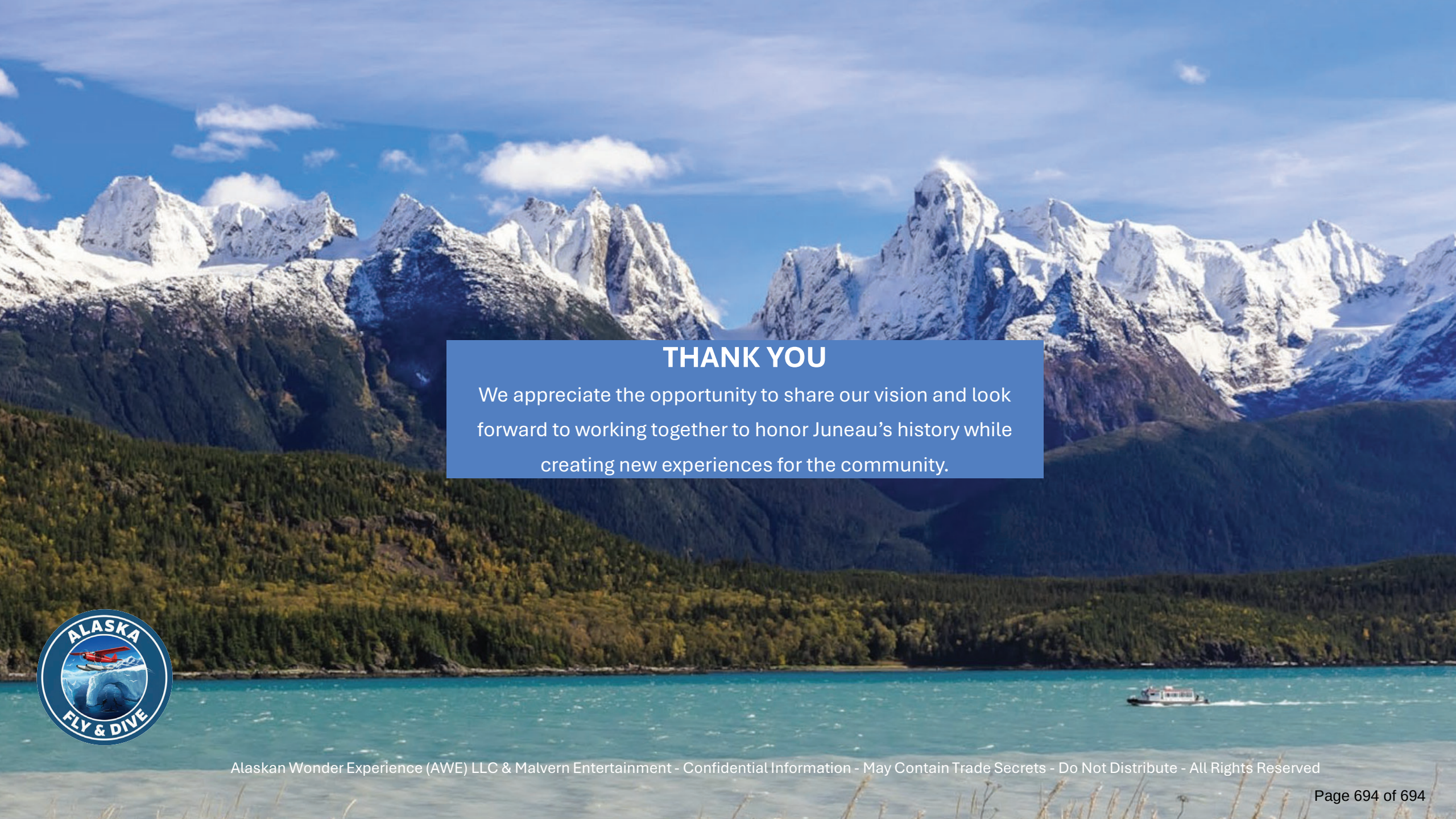

THANK YOU

We appreciate the opportunity to share our vision and look forward to working together to honor Juneau's history while creating new experiences for the community.

Alaskan Wonder Experience (AWE) LLC & Malvern Entertainment - Confidential Information - May Contain Trade Secrets - Do Not Distribute - All Rights Reserved